Rev	AWO #	Description	Date	Appr
-		RELEASED	2/04/10	

APPROVED: _____

DATE: _____ TITLE: _____

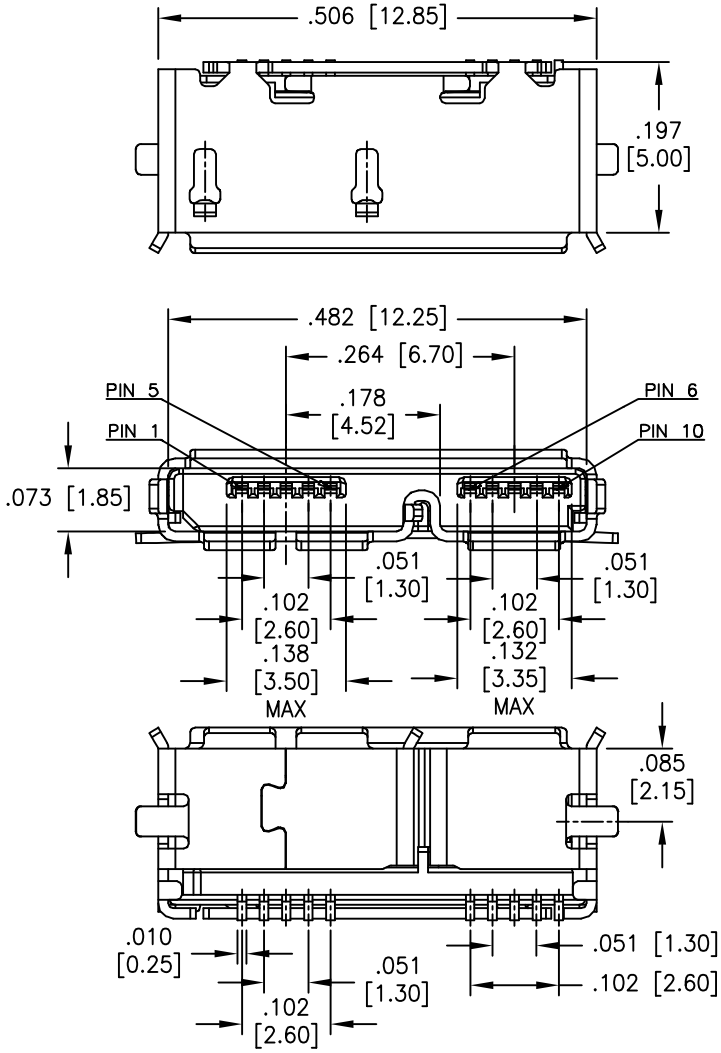

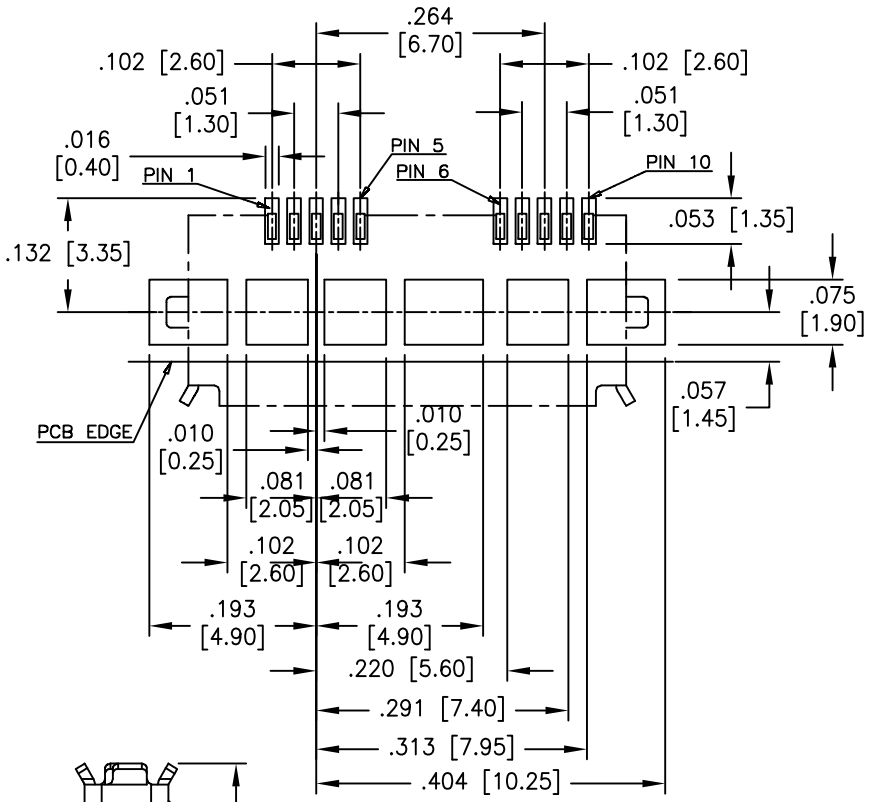

RECOMMENDED PCB LAYOUT

SPECIFICATIONS:
Material:
Insulator: Hi-temp thermoplastic, rated UL 94V-0
Insulator color: Black
Contacts: Copper Alloy
Plating:
Gold flash over Nickel underplate on contact area,
Tin over Copper underplate on tails.

RoHS COMPLIANT

UNLESS OTHERWISE SPECIFIED
ALL DIMENSIONS ARE INCHES [MM]
TOLERANCES: EXCEPT AS NOTED

INCHES		HOLES	
.X	± .10	Ø.X	±.10
.XX	± .020	Ø.XX	±.015
.XXX	± .015	Ø.XXX	±.010

APPROVALS		DATE
DRAWN	DY	2/04/10
CHECKED		
APPROVED		

ADAM TECH
909 Rahway Avenue, Union, NJ 07083
Phone: 908-687-5000 Fax: 908-687-5710

TITLE
MICRO USB 3.0 AB TYPE, FEMALE, 10PIN, SMT

SIZE	PART NO.	REV.
X	MCR-AB3-RA-SMT	-

REF: S00042C | SCALE: NTS | SHEET 1 OF 4