MCP9600

Thermocouple EMF to Temperature Converter, ±1.5 °C Maximum Accuracy

Features

- Thermocouple Electromotive Force (EMF) to °C Converter
  - Integrated Cold-Junction Compensation
- Supported Types (designated by NIST ITS-90):
  - Type K, J, T, N, S, E, B and R
- ±1.5°C (Max.) Hot-Junction Accuracy
- Measurement Resolution:
  - Hot- and Cold-Junctions: 0.0625°C (typical)
- Four Programmable Temperature Alert Outputs
  - Monitor Hot- or Cold-Junction Temperatures
  - Detect Rising or Falling Temperatures
  - Up to 255°C of Programmable Hysteresis
- Programmable Digital Filter for Temperature
- Low Power:
  - Shutdown Mode
  - Burst Mode: 1 to 128 Temperature Samples
- 2-Wire Interface: I^2C Compatible, 100 kHz
  - Supports Eight Devices per I^2C bus
- Operating Voltage Range: 2.7V to 5.5V
- Operating Current: 300 µA (typical)
- Shutdown Current: 2 µA (typical)
- Shutdown Current: 2 µA (typical)
- Package: 20-lead MQFN

Typical Applications

- Petrochemical Thermal Management
- Hand-Held Measurement Equipment
- Industrial Equipment Thermal Management
- Ovens
- Industrial Engine Thermal Monitor
- Temperature Detection Racks

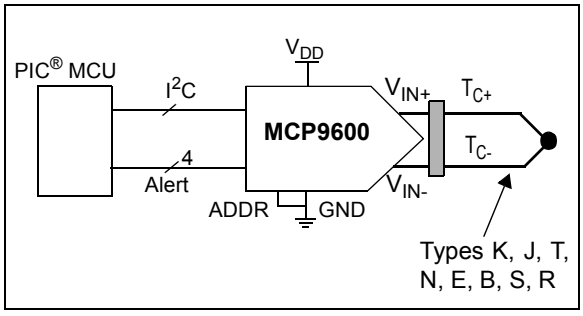

Description

Microchip Technology Inc.'s MCP9600 converts thermocouple EMF to degree Celsius with integrated Cold-Junction compensation. This device corrects the thermocouple nonlinear error characteristics of eight thermocouple types and outputs ±1.5°C accurate temperature data for the selected thermocouple. The correction coefficients are derived from the National Institute of Standards and Technology (NIST) ITS-90 Thermocouple Database.

The MCP9600 digital temperature sensor comes with user-programmable registers which provide design flexibility for various temperature sensing applications. The registers allow user-selectable settings such as Low-Power modes for battery-powered applications, adjustable digital filter for fast transient temperatures and four individually programmable temperature alert outputs which can be used to detect multiple temperature zones.

The temperature alert limits have multiple user programmable configurations such as alert polarity as either an active-low or active-high push-pull output, and output function as comparator mode (useful for thermostat-type operation) or interrupt mode for microprocessor-based systems. In addition, the alerts can detect either a rising or a falling temperature with up to 255°C hysteresis.

This sensor uses an industry standard 2-Wire, I^2C compatible serial interface and supports up to eight devices per bus by setting the device address using the ADDR pin.

Package Type

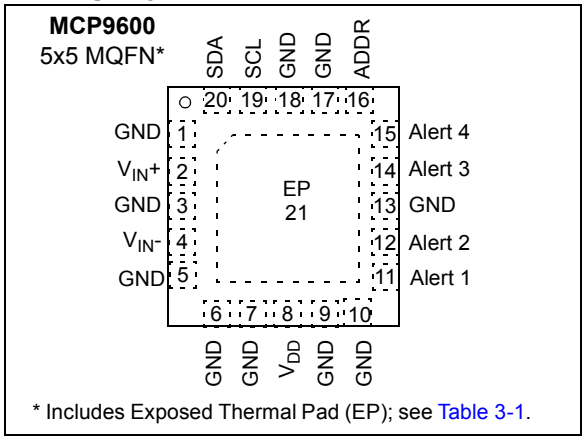

* Includes Exposed Thermal Pad (EP); see Table 3-1.

© 2015-2016 Microchip Technology Inc.

MCP9600 Registers

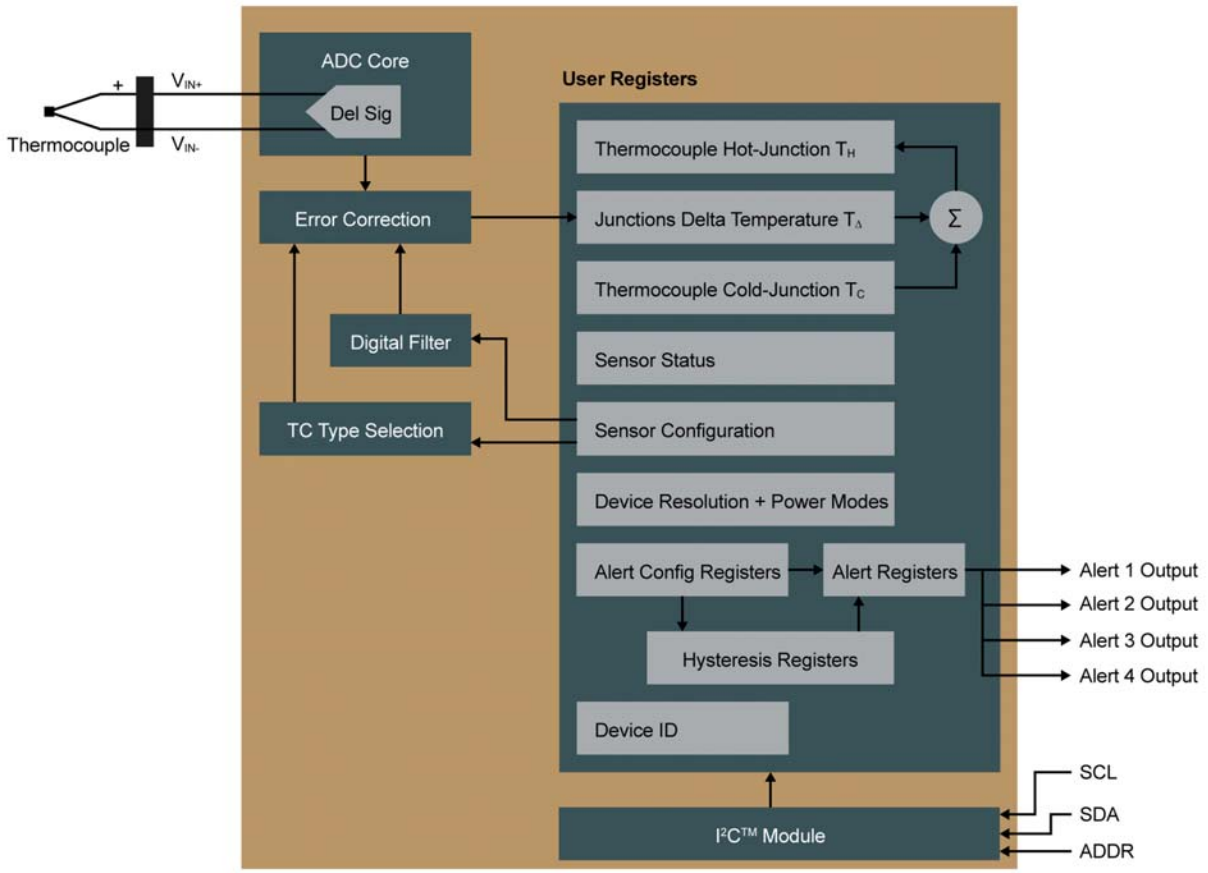

MCP9600 Evaluation Board (ADM00665)

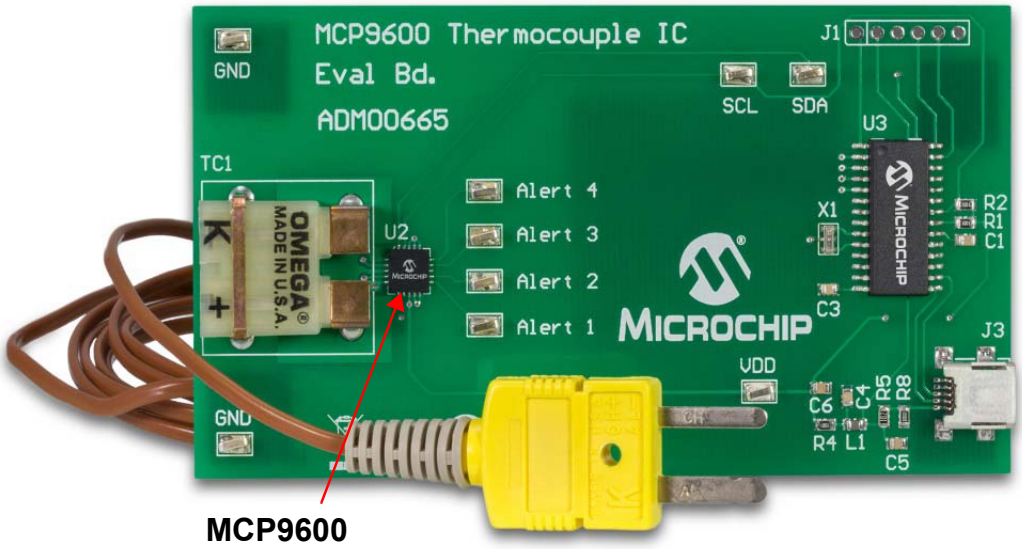

© 2015-2016 Microchip Technology Inc.

1.0 ELECTRICAL CHARACTERISTICS

Absolute Maximum Ratings †

V_{DD} 6.0V
Voltage at all Input/Output Pins ..... GND – 0.3V to 6.0V
Storage Temperature ..... -65°C to +150°C
Ambient Temperature with Power Applied ..... -40°C to +125°C
Junction Temperature (T_J) ..... +150°C
ESD Protection on all Pins (HBM:MM) ..... (4 kV:300V)
Latch-up Current at each Pin ..... ±100 mA

† Notice: Stresses above those listed under “Maximum ratings” may cause permanent damage to the device. This is a stress rating only and functional operation of the device at those or any other conditions above those indicated in the operational listings of this specification is not implied. Exposure to maximum rating conditions for extended periods may affect device reliability.

DC CHARACTERISTICS

Electrical Specifications: Unless otherwise indicated, V_{DD} = 2.7V to 5.5V, GND = Ground, T_A = -40°C to +125°C (where: $T_A = T_C$, defined as Device Ambient Temperature).

Parameters	Sym.	Min.	Typ.	Max.	Unit	Conditions
Thermocouple Sensor Measurement Accuracy						
T_H Hot-Junction Accuracy (V_{DD} = 3.3V)	T_{H_ACY}	-1.5	±0.5	+1.5	°C	T_A = 0°C to +85°C,
$T_H = T_C + T_\Delta$		-3.0	±1	+3.0	°C	T_A = -40°C to +125°C
T_C Cold-Junction Accuracy (V_{DD} = 3.3V)	T_{C_ACY}	-1.0	±0.5	+1.0	°C	T_A = 0°C to +85°C
		-2.0	±1	+2.0	°C	T_A = -40°C to +125°C
T_Δ Junctions Temperature Delta Accuracy						
Type K: T_Δ = -200°C to +1372°C V_{EMF} range: -5.907 mV to 54.886 mV	T_{Δ_ACY}	-0.5	±0.25	+0.5	°C	T_A = 0°C to +85°C, V_{DD} = 3.3V (**Note 1**)
Type J: T_Δ = -150°C to +1200°C V_{EMF} range: -3.336 mV to 47.476 mV						
Type T: T_Δ = -200°C to +400°C V_{EMF} range: -5.603 mV to 20.81 mV						
Type N: T_Δ = -150°C to +1300°C V_{EMF} range: -3.336 mV to 47.476 mV						
Type E: T_Δ = -200°C to +1000°C V_{EMF} range: -8.825 mV to 76.298 mV						
Type S: T_Δ = 250°C to +1664°C V_{EMF} range: -1.875 mV to 17.529 mV						T_A = 0°C to +85°C, V_{DD} = 3.3V (**Note 1**, **2**)
Type B: T_Δ = 1000°C to +1800°C V_{EMF} range: -4.834 mV to 13.591 mV						
Type R: T_Δ = 250°C to +1664°C V_{EMF} range: -1.923 mV to 19.732 mV						

Note 1: The T_{Δ_ACY} temperature accuracy specification is defined as the device accuracy to the NIST ITS-90 Thermocouple EMF to Degree Celsius conversion Database. T_Δ is also defined as the temperature difference between the Hot and Cold Junctions or temperatures from the NIST ITS-90 database.

2: The device measures temperature below the specified range, however the sensitivity to changes in temperature reduces exponentially. Type R and S measure down to -50°C, or -0.226mV$_{EMF}$ and -0.235mV$_{EMF}$, respectively. Type B measures down to 500°C or 1.242mV$_{EMF}$ (see Figures 2-7, 2-8, 2-14 and Figures 2-10, 2-11 and 2-17).

3: Exceeding the V_{IN_CM} input range may cause leakage current through the ESD protection diodes at the thermocouple input pins. This parameter is characterized but not production tested.

© 2015-2016 Microchip Technology Inc.

DC CHARACTERISTICS

Electrical Specifications: Unless otherwise indicated, V_{DD} = 2.7V to 5.5V, GND = Ground, T_A = -40°C to +125°C (where: $T_A = T_C$, defined as Device Ambient Temperature).

Parameters	Sym.	Min.	Typ.	Max.	Unit	Conditions
Sensor Characteristics						
T_C and T_H Temperature Resolution	T_{RES}	—	±0.0625	—	°C	With max. Resolution
Sampling Rate (T_A = +25°C)	t_{CONV}	—	320	—	ms	18-bit Resolution
		—	80	—	ms	16-bit Resolution
		—	20	—	ms	14-bit Resolution
		—	5	—	ms	12-bit Resolution
Temperature Calculation Time	t_{CALC}	—	12	—	ms	T_A = +25°C
Thermocouple Input						
Offset Error	V_{OERR}	—	±2	—	µV	
Offset Error Drift	V_{OERR_DRF}	—	50	—	nV/°C	
Full-Scale Gain Error	G_{ERR}	—	—	±0.04	%FS	T_A = 0°C to +85°C
Full-Scale Gain Error Drift	G_{ERR_DRF}	—	±0.01	—	%FS	
Full-Scale Integral Nonlinearity	INL	—	10	—	ppm	
Voltage Resolution	V_{RES}	—	2	—	µV	18-bit Resolution
Differential Mode Range	V_{IN_DF}	-250	—	+250	mV	ADC input range
Differential Mode Impedance	Z_{IN_DF}	—	300	—	kΩ	
Common-Mode Range	V_{IN_CM}	V_{DD}-0.3	—	V_{DD}+0.3	V	(**Note 3**)
Common-Mode Impedance	Z_{IN_CM}	—	25	—	MΩ	
Common-Mode Rejection Ratio	CMRR	—	105	—	dB	
Power Supply Rejection Ratio	PSRR	—	60	—	dB	
Line Regulation	V_{Line_R}	—	0.2	—	°C/V	
Alert 1, 2, 3, 4 Outputs						
Low-Level Voltage	V_{OL}	—	—	0.4	V	I_{OL}= 3 mA
High-Level Voltage	V_{OH}	V_{DD}-0.5	—	—	V	I_{OH}= 3 mA
Operating Voltage and Current						
Operating Voltage	V_{DD}	2.7	—	5.5	V	
I^2C Inactive Current	I_{DD}	—	0.3	0.5	mA	V_{DD}=3.3V, T_A = 85°C
I^2C Active Current or during t_{CALC}		—	1.5	2.5	mA	
Shutdown Current	I_{SHDN}	—	2	5	µA	I^2C Inactive
Power On Reset (POR) Thresholds	V_{POR}	1.0	2.1	2.6	V	Rising/Falling V_{DD}
Thermal Response						
5x5 mm MQFN Package (Cold-Junction)	t_{RSP}	—	3	—	s	Time to 63%, +25°C (Air) to +125°C (oil bath), 2x2 inch PCB

Note 1: The T_{Δ_ACY} temperature accuracy specification is defined as the device accuracy to the NIST ITS-90 Thermocouple EMF to Degree Celsius conversion Database. T_Δ is also defined as the temperature difference between the Hot and Cold Junctions or temperatures from the NIST ITS-90 database.

2: The device measures temperature below the specified range, however the sensitivity to changes in temperature reduces exponentially. Type R and S measure down to -50°C, or -0.226mV$_{EMF}$ and -0.235mV$_{EMF}$, respectively. Type B measures down to 500°C or 1.242mV$_{EMF}$ (see Figures 2-7, 2-8, 2-14 and Figures 2-10, 2-11 and 2-17).

3: Exceeding the V_{IN_CM} input range may cause leakage current through the ESD protection diodes at the thermocouple input pins. This parameter is characterized but not production tested.

© 2015-2016 Microchip Technology Inc.

INPUT/OUTPUT PIN DC CHARACTERISTICS

Electrical Specifications: Unless otherwise indicated, V_{DD} = 2.7V to 5.5V, GND = Ground, T_A = -40°C to +125°C (where: $T_A = T_C$, defined as Device Ambient Temperature).

Parameters	Sym.	Min.	Typ.	Max.	Units	Conditions
Serial Input/Output and I²C Slave Address Input (ADDR)						
Input (SCL, SDA)						
High-Level Voltage	V_{IH}	$0.7V_{DD}$	—	—	V	
Low-Level Voltage	V_{IL}	—	—	$0.3V_{DD}$	V	
Input Current	I_{LEAK}	—	—	±2	µA	
Output (SDA)						
Low-Level Voltage	V_{OL}	—	—	0.4	V	I_{OL}= 3 mA
High-Level Current (leakage)	I_{OH}	—	—	1	µA	$V_{OH} = V_{DD}$
Low-Level Current	I_{OL}	6	—	—	mA	V_{OL} = 0.6V
Capacitance	C_{IN}	—	5	—	pF	
I²C Slave Address Selection Levels (Note 1)						
Command Byte <1100 000x>	V_{ADDR}	GND	—	—	V	Address = 0
Command Byte <1100 001x>		V_{ADDR_L} (Note 2)	V_{ADDR_TYP} (Note 2)	V_{ADDR_H} (Note 2)		Address = 1
Command Byte <1100 010x>						Address = 2
Command Byte <1100 011x>						Address = 3
Command Byte <1100 100x>						Address = 4
Command Byte <1100 101x>						Address = 5
Command Byte <1100 110x>						Address = 6
Command Byte <1100 111x>		—	—	V_{DD}		Address = 7
SDA and SCLK Inputs						
Hysteresis	V_{HYST}	—	$0.05V_{DD}$	—	V	V_{DD} > 2V
Spike Suppression	T_{SP}	—	50	—	ns	

Note 1: The ADDR pin can be tied to V_{DD} or V_{SS}. For additional slave addresses, resistive divider network can be used to set voltage levels that are rationed to V_{DD}. The device supports up to 8 levels (see **Section 6.3.1 "I2C Addressing"** for recommended resistor values).

2: V_{ADDR_TYP} = Address*V_{DD}/8 + V_{DD}/16,
$V_{ADDR_L} = V_{ADDR_TYP} - V_{DD}/32$, and
$V_{ADDR_H} = V_{ADDR_TYP} + V_{DD}/32$ (where: Address = 1, 2, 3, 4, 5, 6).

TEMPERATURE CHARACTERISTICS

Electrical Specifications: Unless otherwise indicated, V_{DD} = 2.7V to 5.5V, GND = Ground.

Parameters	Sym.	Min.	Typ.	Max.	Units	Conditions
Temperature Ranges						
Specified Temperature Range	T_A	-40	—	+125	°C	Note 1
Operating Temperature Range	T_A	-40	—	+125	°C	
Storage Temperature Range	T_A	-65	—	+150	°C	
Thermal Package Resistances						
Thermal Resistance, MQFN	θ_{JA}	—	38.8	—	°C/W	

Note 1: Operation in this range must not cause T_J to exceed the Maximum Junction Temperature (+150°C).

SENSOR SERIAL INTERFACE TIMING SPECIFICATIONS

Electrical Specifications: Unless otherwise indicated, GND = Ground, T_A = -40°C to +125°C, V_{DD} = 2.7V to 5.5V and C_L = 80 pF (**Note 1**).

Parameters	Sym.	Min.	Max.	Units
2-Wire I²C Interface				
Serial Port Frequency	f_{SCL}	10	100	kHz
Low Clock (**Note 2**)	t_{LOW}	4700	—	ns
High Clock	t_{HIGH}	4000	—	ns
Rise Time (**Note 3**)	t_R	—	1000	ns
Fall Time (**Note 3**)	t_F	20	300	ns
Data in Setup Time (**Note 2**)	$t_{SU:DAT}$	250	—	ns
Data in Hold Time	$t_{HD:DAT}$	0	—	ns
Start Condition Setup Time	$t_{SU:STA}$	4700	—	ns
Start Condition Hold Time	$t_{HD:STA}$	4000	—	ns
Stop Condition Setup Time	$t_{SU:STO}$	4000	—	ns
Bus Idle/Free	t_{B-FREE}	10	—	µs
Bus Capacitive Load	C_b	—	400	pf
Clock Stretching	$t_{STRETCH}$	60	—	µs

Note 1: All values referred to $V_{IL\ MAX}$ and $V_{IH\ MIN}$ levels.

2: This device can be used in a Standard-mode I²C-bus system, but the requirement $t_{SU:DAT} \geq 250$ ns must be met.

3: Characterized, but not production tested.

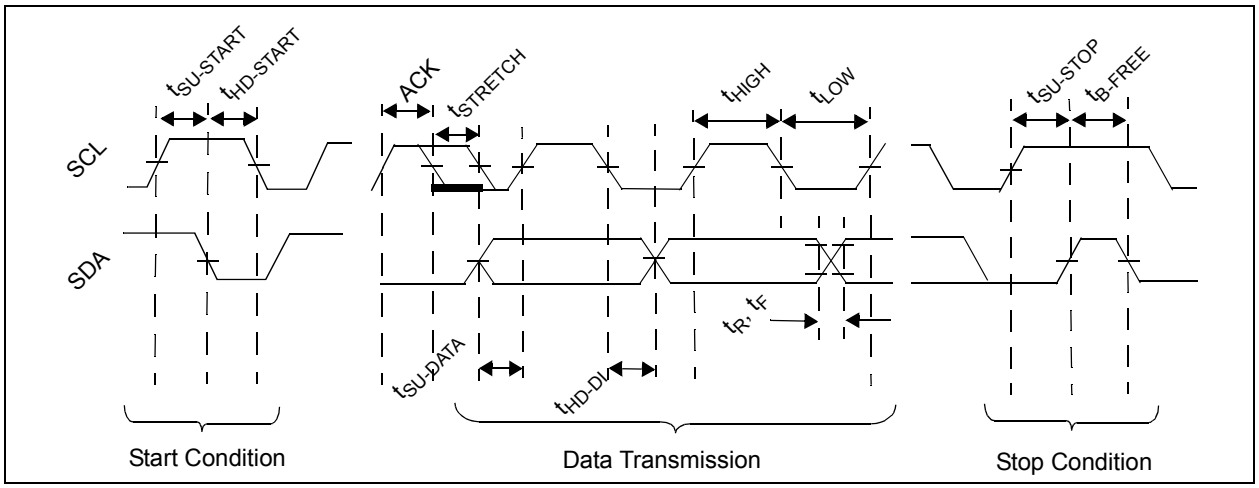

FIGURE 1-1: *Timing Diagram.*

© 2015-2016 Microchip Technology Inc.

2.0 TYPICAL PERFORMANCE CURVES

Note:	The graphs and tables provided following this note are a statistical summary based on a limited number of samples and are provided for informational purposes only. The performance characteristics listed herein are not tested or guaranteed. In some graphs or tables, the data presented may be outside the specified operating range (e.g., outside specified power supply range) and therefore outside the warranted range.

Note: Unless otherwise indicated, V_{DD} = 2.7V to 5.5V, GND = Ground, SDA/SCL pulled-up to V_{DD} and T_A = -40°C to +125°C.

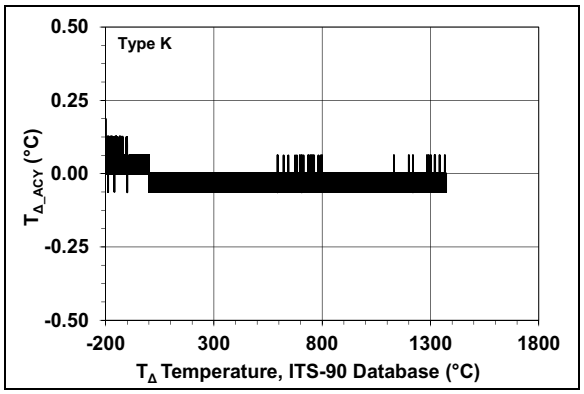

FIGURE 2-1: *Typical Temperature Accuracy from NIST ITS-90 Database, Type K.*

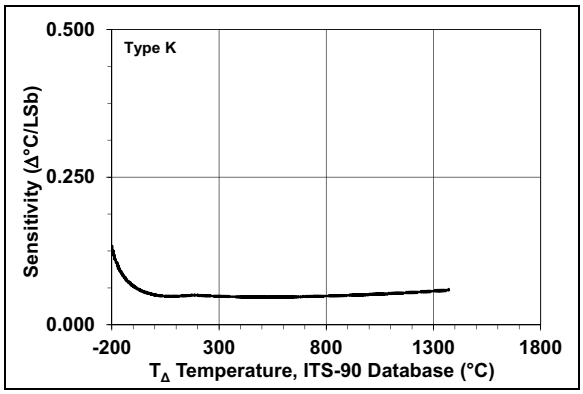

FIGURE 2-4: *Temperature Sensitivity with 18-Bit Resolution, Type K.*

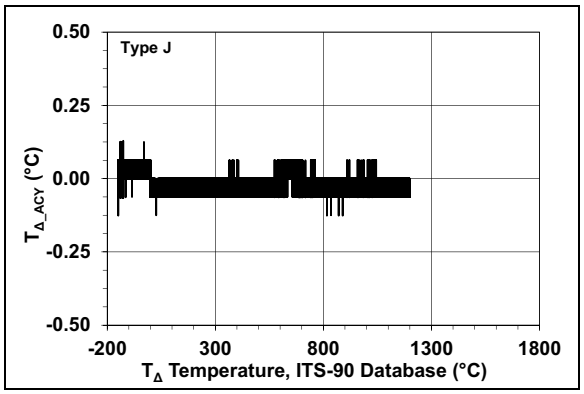

FIGURE 2-2: *Typical Temperature Accuracy from NIST ITS-90 Database, Type J.*

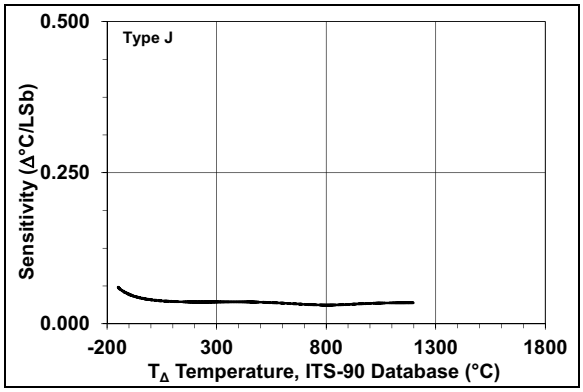

FIGURE 2-5: *Temperature Sensitivity with 18-Bit Resolution, Type J.*

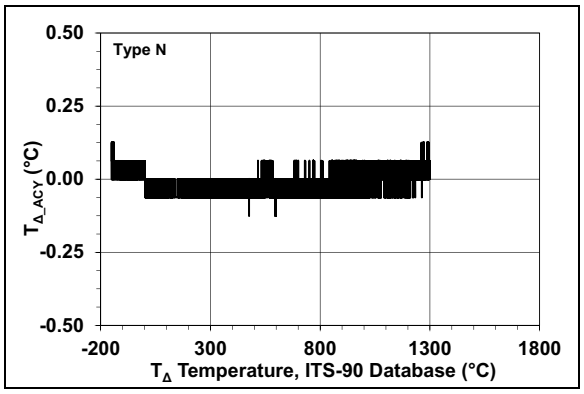

FIGURE 2-3: *Typical Temperature Accuracy from NIST ITS-90 Database, Type N.*

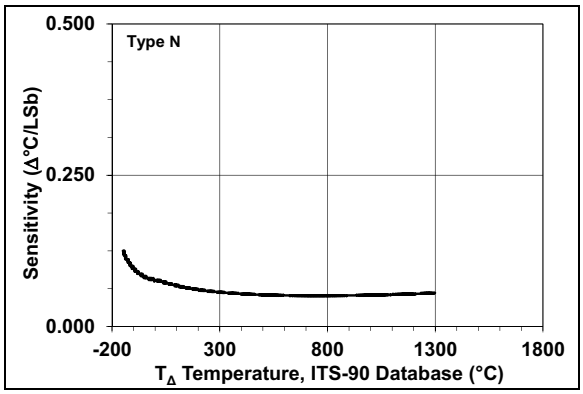

FIGURE 2-6: *Temperature Sensitivity with 18-Bit Resolution, Type N.*

Note: Unless otherwise indicated, V_{DD} = 2.7V to 5.5V, GND = Ground, SDA/SCL pulled-up to V_{DD} and T_A = -40°C to +125°C.

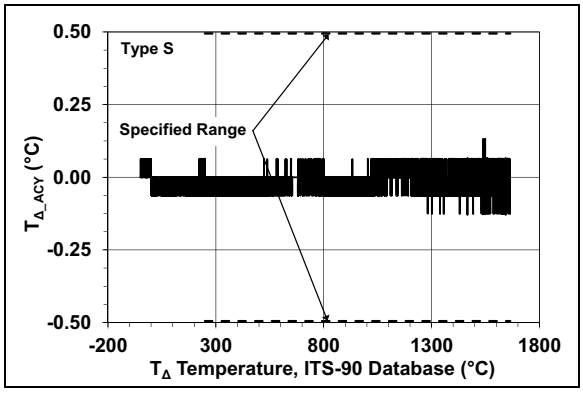

FIGURE 2-7: *Typical Temperature Accuracy from NIST ITS-90 Database, Type S.*

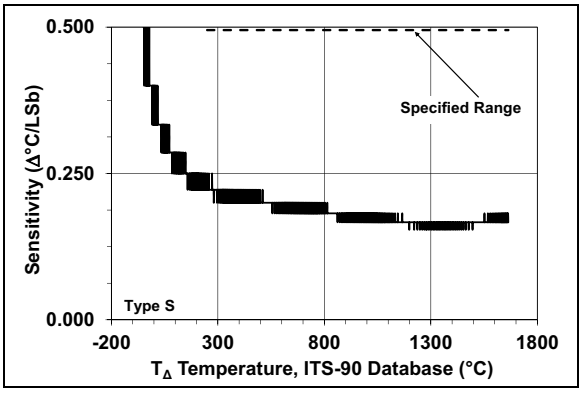

FIGURE 2-10: *Temperature Sensitivity with 18-Bit Resolution, Type S.*

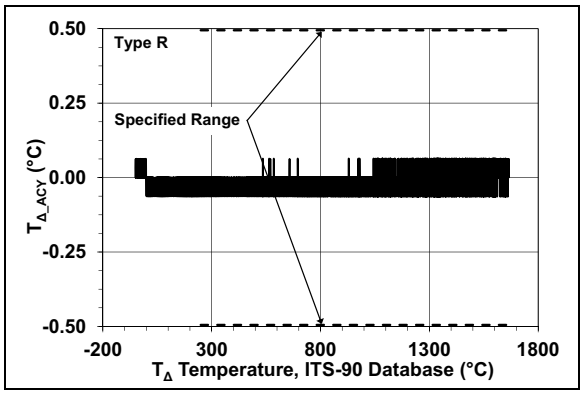

FIGURE 2-8: *Typical Temperature Accuracy from NIST ITS-90 Database, Type R.*

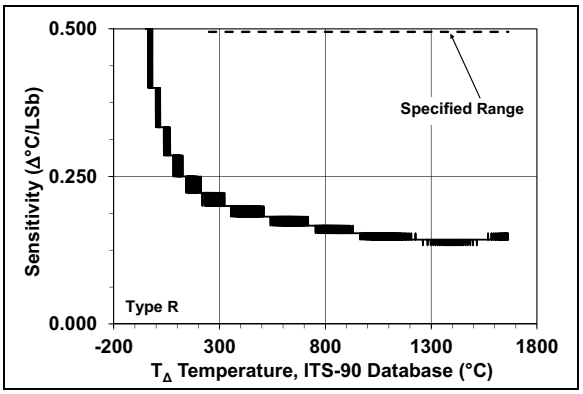

FIGURE 2-11: *Temperature Sensitivity with 18-Bit Resolution, Type R.*

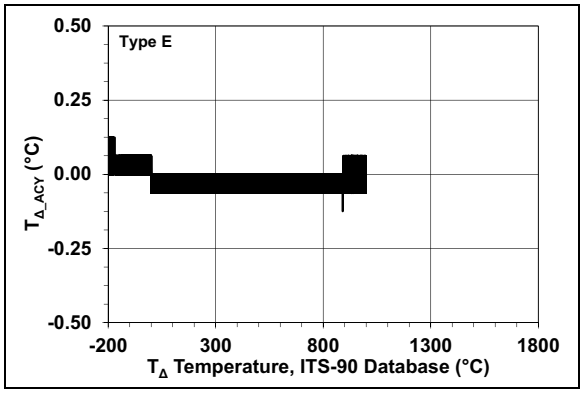

FIGURE 2-9: *Typical Temperature Accuracy from NIST ITS-90 Database, Type E.*

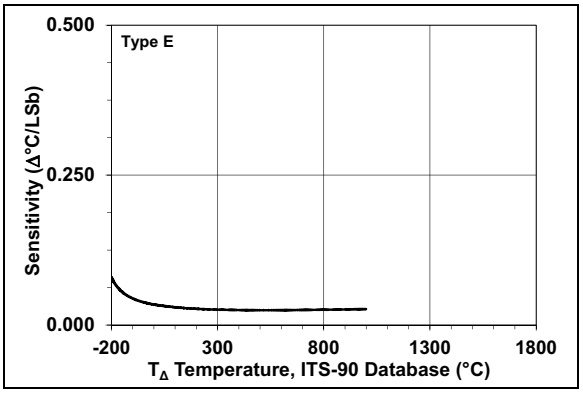

FIGURE 2-12: *Temperature Sensitivity with 18-Bit Resolution, Type E.*

© 2015-2016 Microchip Technology Inc.

Note: Unless otherwise indicated, V_{DD} = 2.7V to 5.5V, GND = Ground, SDA/SCL pulled-up to V_{DD} and T_A = -40°C to +125°C.

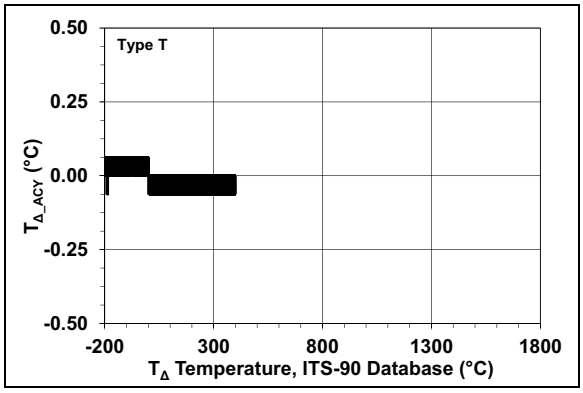

FIGURE 2-13: *Typical Temperature Accuracy from NIST ITS-90 Database, Type T.*

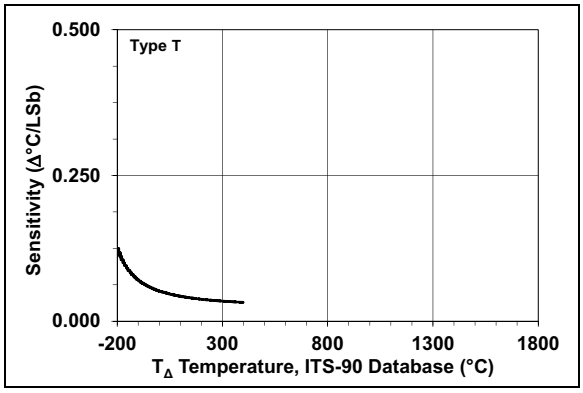

FIGURE 2-16: *Temperature Sensitivity with 18-Bit Resolution, Type T.*

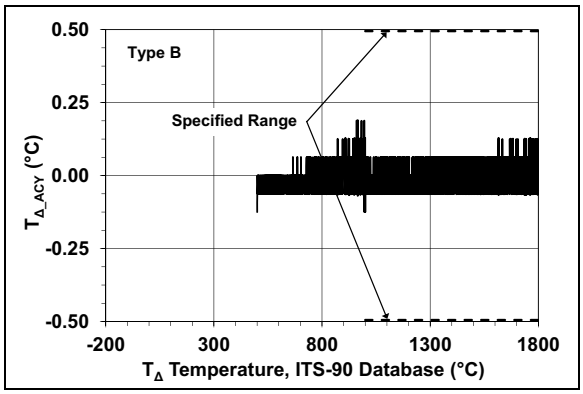

FIGURE 2-14: *Typical Temperature Accuracy from NIST ITS-90 Database, Type B.*

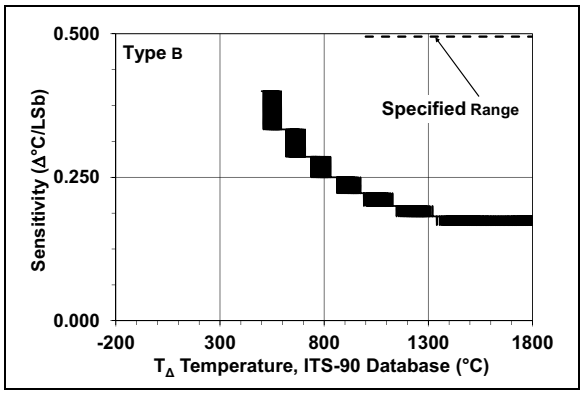

FIGURE 2-17: *Temperature Sensitivity with 18-Bit Resolution, Type B.*

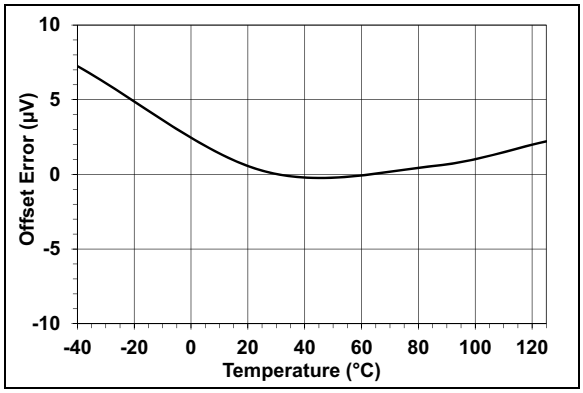

FIGURE 2-15: *Input Offset Error Voltage (V_{IN+}, V_{IN-}).*

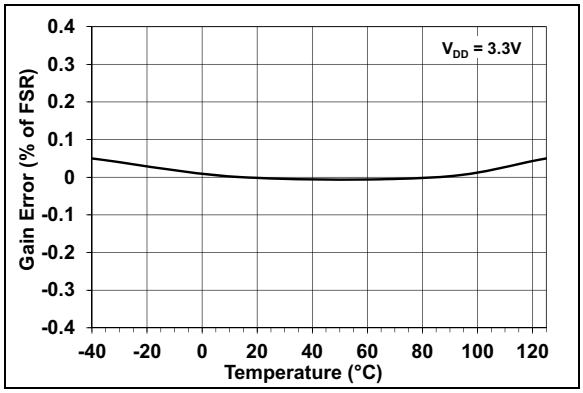

FIGURE 2-18: *Full-Scale Gain Error.*

Note: Unless otherwise indicated, V_{DD} = 2.7V to 5.5V, GND = Ground, SDA/SCL pulled-up to V_{DD} and T_A = -40°C to +125°C.

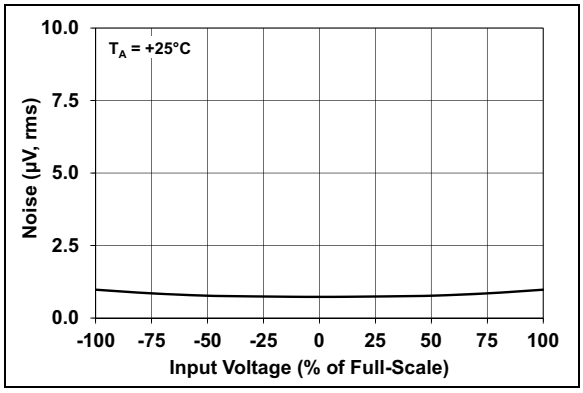

FIGURE 2-19: *Input Noise, % of Full-Scale.*

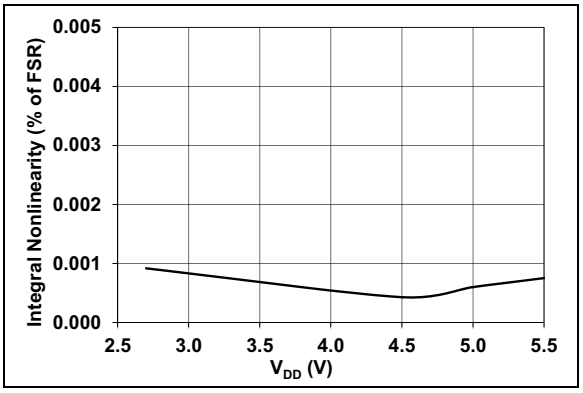

FIGURE 2-22: *Integral Nonlinearity across V_{DD}.*

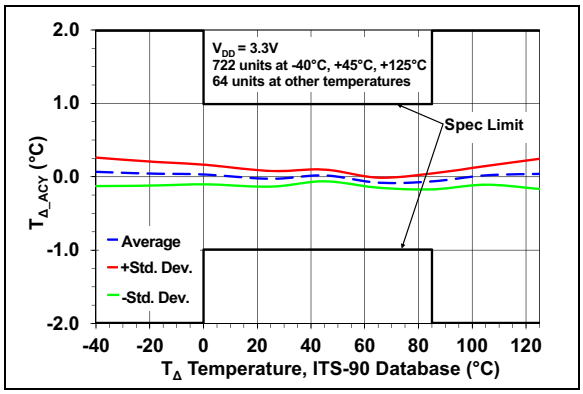

FIGURE 2-20: *Cold-Junction Sensor Temperature Accuracy.*

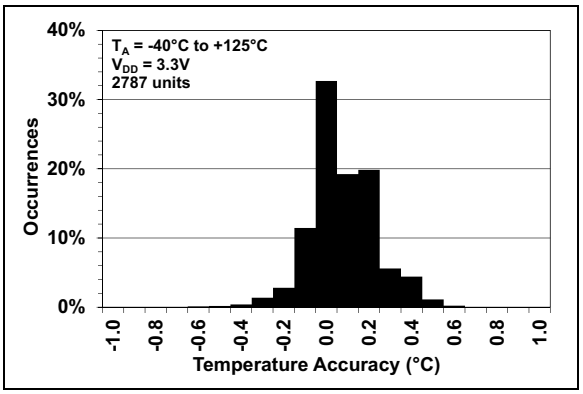

FIGURE 2-23: *Cold-Junction Sensor Temperature Accuracy Distribution.*

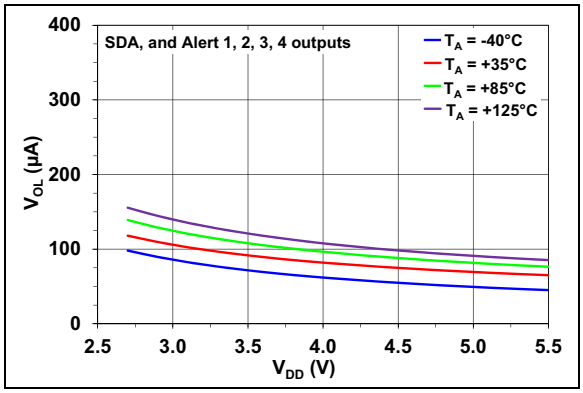

FIGURE 2-21: *SDA and Alert Outputs, V_{OL} across V_{DD}.*

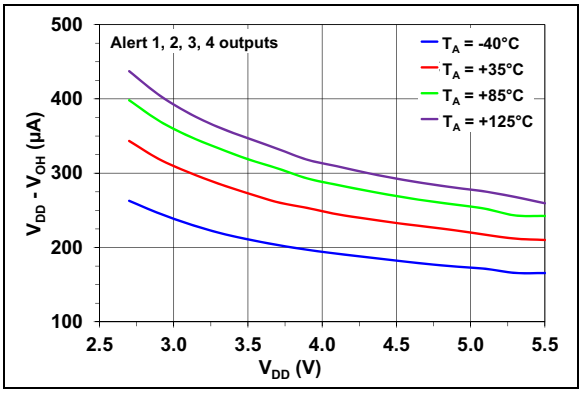

FIGURE 2-24: *Alert Outputs, V_{OH} across V_{DD}.*

© 2015-2016 Microchip Technology Inc.

Note: Unless otherwise indicated, V_{DD} = 2.7V to 5.5V, GND = Ground, SDA/SCL pulled-up to V_{DD} and T_A = -40°C to +125°C.

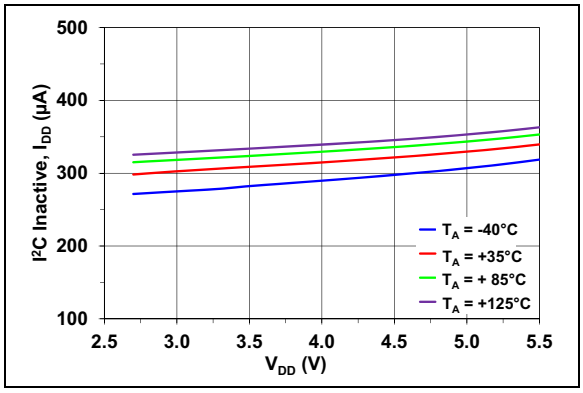

FIGURE 2-25: *I^2C Inactive I_{DD} across V_{DD}.*

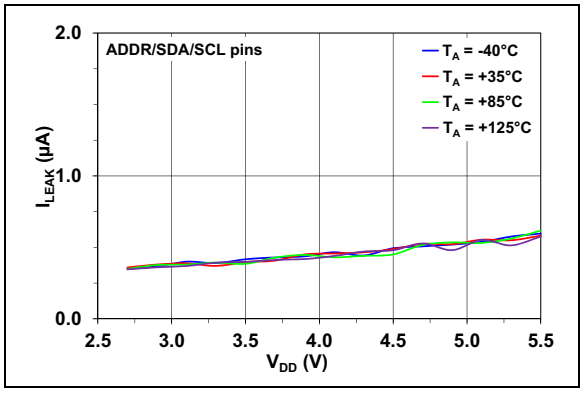

FIGURE 2-28: *SDA, SCL and ADDR Input Pins Leakage Current, I_{LEAK} across V_{DD}.*

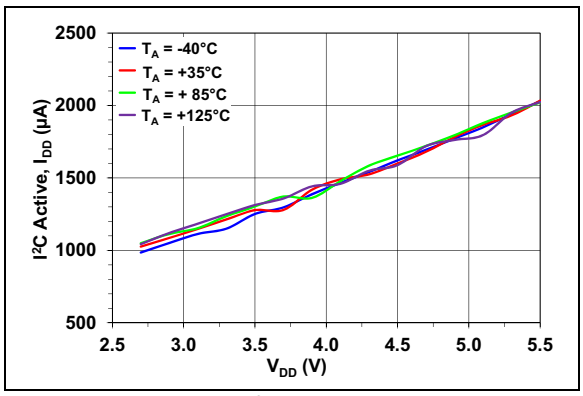

FIGURE 2-26: *I^2C Active I_{DD} across V_{DD}.*

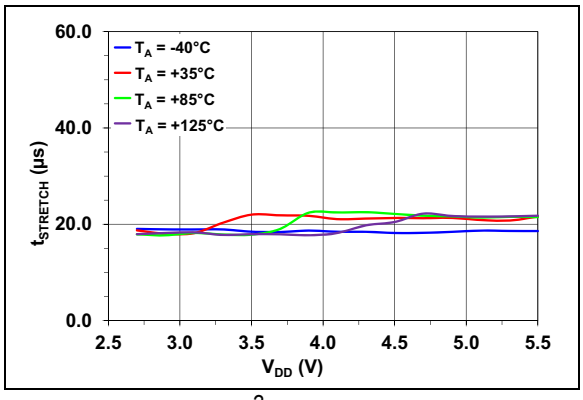

FIGURE 2-29: *I^2C Interface Clock Stretch Duration, $t_{STRETCH}$ across V_{DD}.*

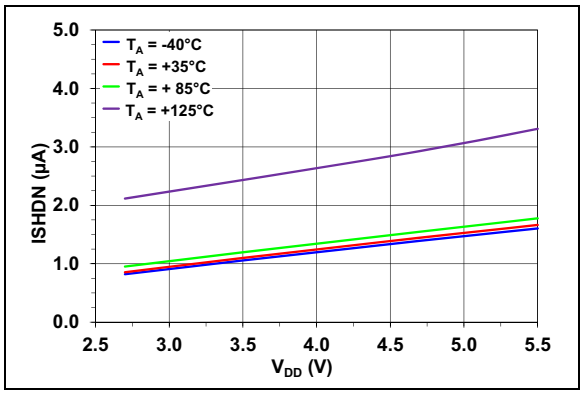

FIGURE 2-27: *Shutdown Current, I_{SHDN} across V_{DD}.*

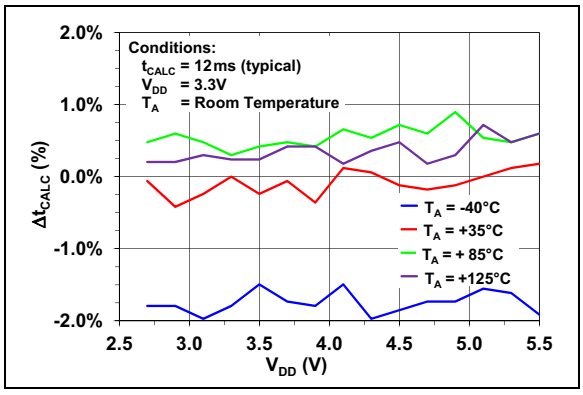

FIGURE 2-30: *Temperature Calculation Duration, t_{CALC} change across V_{DD}.*

NOTES:

© 2015-2016 Microchip Technology Inc.

3.0 PIN DESCRIPTION

The descriptions of the pins are listed in Table 3-1.

TABLE 3-1: PIN FUNCTION TABLE

5x5 MQFN	Symbol	Pin Function
1, 3, 5,13, 17	GND	Electrical ground
2	$V_{IN}+$	Thermocouple Positive Terminal input
4	$V_{IN}-$	Thermocouple Negative Terminal input
6, 7, 9, 10, 18	GND	Not electrical ground; must be tied to ground
8	V_{DD}	Power
11	Alert 1	Alert Output 1
12	Alert 2	Alert Output 2
14	Alert 3	Alert Output 3
15	Alert 4	Alert Output 4
16	ADDR	I^2C Save Address selection voltage input
19	SCL	I^2C Clock Input
20	SDA	I^2C Data Input
21	EP	Exposed Thermal Pad (EP); must be connected to GND

3.1 Ground Pin (GND)

The GND pin is the system ground pin. Pins 1, 3, 5, 13 and 17 are system ground pins and they are at the same potential. However, pins 6, 7, 9, 10 and 18 must be connected to ground for normal operation.

3.2 Thermocouple Input (V_{IN+}, V_{IN-})

The thermocouple wires are directly connected to these inputs. The positive node is connected to the V_{IN+} pin while the negative node connects to the V_{IN-} node. The thermocouple voltage is converted to degree Celsius.

3.3 Power Pin (V_{DD})

V_{DD} is the power pin. The operating voltage range, as specified in the DC Electrical Specification table, is applied on this pin.

3.4 Push-Pull Alert Outputs (Alert 1, 2, 3, 4)

The MCP9600's Alert pins are user-programmable push-pull outputs which can be used to detect rising or falling temperatures. The device outputs signals when the ambient temperature exceeds the user-programmed temperature alert limit.

3.5 I^2C Slave Address Pin (ADDR)

This pin is used to set the I^2C slave address. This pin can be tied to V_{DD}, GND, or a ratio of V_{DD} can be selected to set up to eight address levels using a resistive voltage divider network.

3.6 Serial Clock Line (SCL)

The SCL is a clock input pin. All communication and timing is relative to the signal on this pin. The clock is generated by the host or master controller on the bus (see **Section 4.0 "Serial Communication"**).

3.7 Serial Data Line (SDA)

SDA is a bidirectional input/output pin used to serially transmit data to/from the host controller. This pin requires a pull-up resistor (see **Section 4.0 "Serial Communication"**).

© 2015-2016 Microchip Technology Inc.

NOTES:

© 2015-2016 Microchip Technology Inc.

4.0 SERIAL COMMUNICATION

4.1 2-Wire Standard Mode I²C Protocol-Compatible Interface

The MCP9600's serial clock input (SCL) and the bidirectional serial data line (SDA) form a 2-Wire bidirectional data communication line (refer to the Input/Output Pin DC Characteristics table and Sensor Serial Interface Timing Specifications table).

The following bus protocol has been defined:

TABLE 4-1: MCP9600 SERIAL BUS PROTOCOL DESCRIPTIONS

Term	Description
Master	The device that controls the serial bus, typically a microcontroller
Slave	The device addressed by the master, such as the MCP9600
Transmitter	Device sending data to the bus
Receiver	Device receiving data from the bus
START	A unique signal from master to initiate serial interface with a slave
STOP	A unique signal from the master to terminate serial interface from a slave
Read/Write	A read or write to the MCP9600 registers
ACK	A receiver Acknowledges (ACK) the reception of each byte by polling the bus
NAK	A receiver Not-Acknowledges (NAK) or releases the bus to show End-of-Data (EOD)
Busy	Communication is not possible because the bus is in use
Not Busy	The bus is in the idle state, both SDA and SCL remain high
Data Valid	SDA must remain stable before SCL becomes high in order for a data bit to be considered valid. During normal data transfers, SDA only changes state while SCL is low.

4.1.1 DATA TRANSFER

Data transfers are initiated by a Start condition (START), followed by a 7-bit device address and a read/write bit. An Acknowledge (ACK) from the slave confirms the reception of each byte. Each access must be terminated by a Stop condition (STOP).

Repeated communication is initiated after $t_{B\text{-}FREE}$.

This device supports the Receive Protocol. The register can be specified using the pointer for the initial read. Each repeated read or receive begins with a Start condition and address byte. The MCP9600 retains the previously selected register. Therefore, it outputs data from the previously-specified register (repeated pointer specification is not necessary).

4.1.2 MASTER/SLAVE

The bus is controlled by a master device (typically a microcontroller) that controls the bus access and generates the Start and Stop conditions. The MCP9600 is a slave device and does not control other devices in the bus. Both master and slave devices can operate as either transmitter or receiver. However, the master device determines which mode is activated.

4.1.3 START/STOP CONDITION

A high-to-low transition of the SDA line (while SCL is high) is the Start condition. All data transfers must be preceded by a Start condition from the master. A low-to-high transition of the SDA line (while SCL is high) signifies a Stop condition.

If a Start or Stop condition is introduced during data transmission, the MCP9600 releases the bus. All data transfers are ended by a Stop condition from the master.

4.1.4 ADDRESS BYTE

Following the Start condition, the host must transmit an 8-bit address byte to the MCP9600. The address for the MCP9600 Temperature Sensor is '11,0,0,A2,A1,A0' in binary, where the A2, A1 and A0 bits are set externally by connecting the corresponding V_{ADDR} voltage levels on the ADDR pin (see **Section "Input/Output Pin DC Characteristics"**). The 7-bit address transmitted in the serial bit stream must match the selected address for the MCP9600 to respond with an ACK. Bit 8 in the address byte is a read/write bit. Setting this bit to '1' commands a read operation, while '0' commands a write operation (see Figure 4-1).

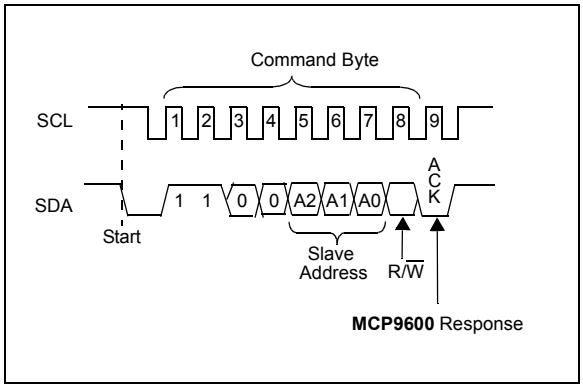

FIGURE 4-1: *Device Addressing.*

4.1.5 DATA VALID

After the Start condition, each bit of data in transmission needs to be settled for a time specified by $t_{SU-DATA}$ before SCL toggles from low-to-high (see the Sensor Serial Interface Timing Specifications section).

4.1.6 ACKNOWLEDGE (ACK/NAK)

Each receiving device, when addressed, is expected to generate an ACK bit after the reception of each byte. The master device must generate an extra clock pulse for ACK to be recognized.

The acknowledging device pulls down the SDA line for $t_{SU-DATA}$ before the low-to-high transition of SCL from the master. SDA also needs to remain pulled-down for t_{HD-DAT} after a high-to-low transition of SCL.

During read, the master must signal an End-of-Data (EOD) to the slave by not generating an ACK bit (NAK) once the last bit has been clocked out of the slave. In this case, the slave will leave the data line released to enable the master to generate the Stop condition.

4.1.7 CLOCK STRETCHING

During the I^2C read operation, this device will hold the I^2C clock line low for t_{STRECH} after the falling edge of the ACK signal. In order to prevent bus contention, the master controller must release or hold the SCL line low during this period.

In addition, the master controller must provide eight consecutive clock cycles after generating the ACK bit from a read command. This allows the device to push out data from the SDA output shift registers. Missing clock cycles could result in bus contention. At the end of the data transmission, the master controller must provide the NAK bit, followed by a STOP bit to terminate communication.

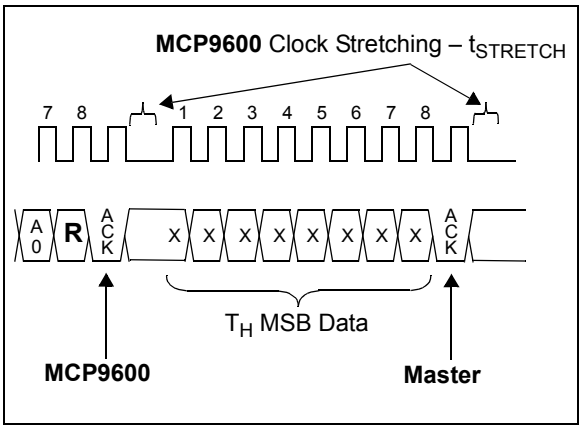

FIGURE 4-2: *Clock Stretching.*

4.1.8 SEQUENTIAL READ

During sequential read, the device transmits data from the proceeding register starting from the previously set register pointer. The MCP9600 maintains an internal address pointer, which is incremented at the completion of each read-data transmission followed by ACK from the master. A stop bit terminates the sequential read.

© 2015-2016 Microchip Technology Inc.

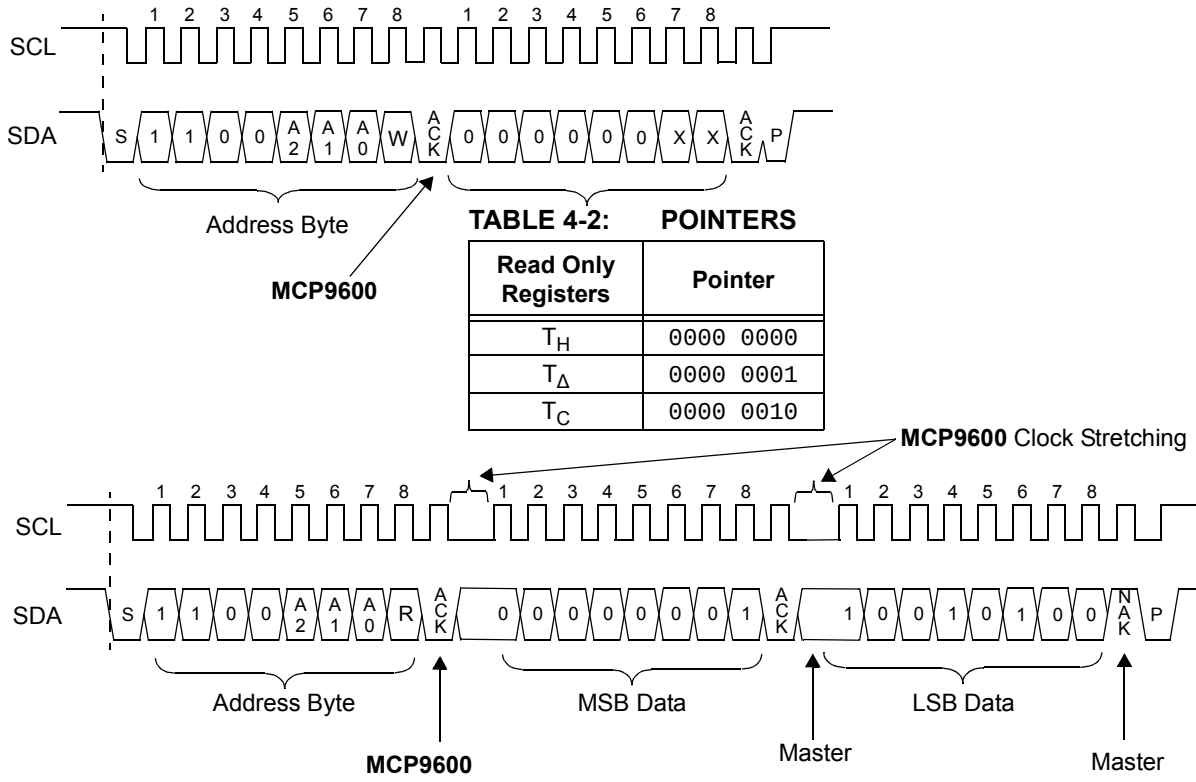

TABLE 4-2: POINTERS

Read Only Registers	Pointer
T_H	0000 0000
T_Δ	0000 0001
T_C	0000 0010

Note: this is an example pseudo routine:

```
i2c_start();                    // send START command
i2c_write(b'1100 0000');        // WRITE Command
                                // also, make sure bit 0 is cleared '0'
i2c_write(b'0000 00XX');        // Write T_H, T_Δ, or T_C registers
i2c_stop();                     // send STOP command
i2c_start();                    // send START command
i2c_write(b'1100 0001');        // READ Command
                                // also, make sure bit 0 is set '1'
UpperByte = i2c_read(ACK);      // READ 8 bits
                                // and Send ACK bit
LowerByte = i2c_read(NAK);      // READ 8 bits
                                // and Send NAK bit
i2c_stop();                     // send STOP command
```

//Convert the temperature data

```
if ((UpperByte & 0x80) == 0x80){            //T_A < 0°C
   UpperByte = UpperByte & 0x7F;            //Clear SIGN
   Temperature = 1024 - (UpperByte x 16 + LowerByte / 16);
}else                                       //T_A ≥ 0°C
   Temperature = (UpperByte x 16 + LowerByte / 16);
                                //Temperature = Ambient Temperature (°C)
```

FIGURE 4-3: *Timing Diagram to Set a Register Pointer and Read a Two Byte Data.*

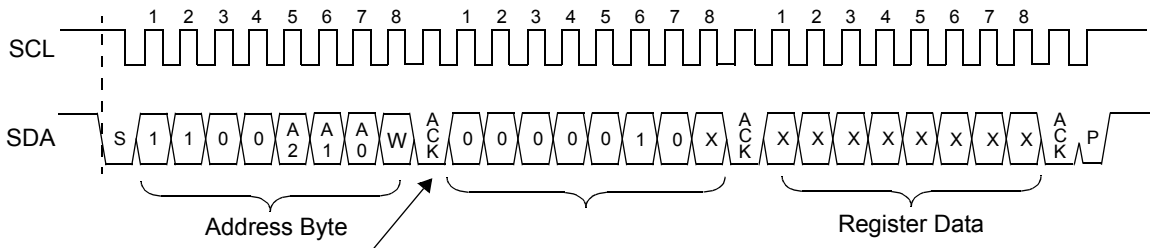

TABLE 4-3: POINTERS

Read/Write Registers	Pointer
Status	0000 0100
Configuration	0000 0101
	0000 0110

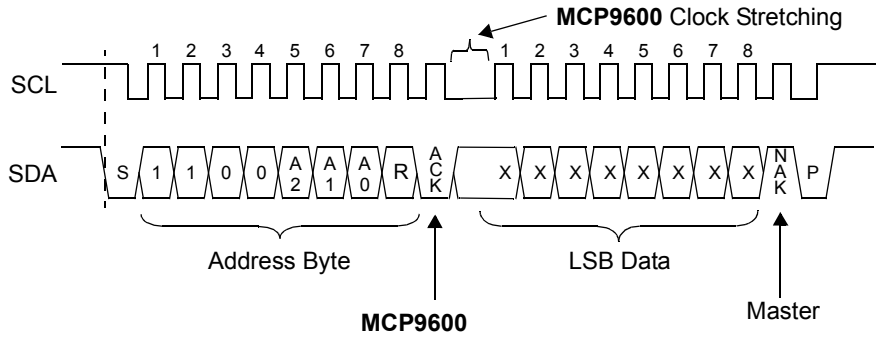

Note: this is an example pseudo routine:

```
i2c_start();                    // send START command
i2c_write(b'1100 0000');        // WRITE Command
                                // also, make sure bit 0 is cleared '0'
i2c_write(b'0000 01XX');        // Write Status or Configuration registers
i2c_write(b'XXXX XXXX');        // Write register data
i2c_stop();                     // send STOP command
i2c_start();                    // send START command
i2c_write(b'1100 0001');        // READ Command
                                // also, make sure bit 0 is set '1'
Data = i2c_read(NAK);           // READ 8 bits
                                // and Send NAK bit
i2c_stop();                     // send STOP command
```

FIGURE 4-4: *Timing Diagram to Set a Register Pointer and Read a Two Byte Data.*

© 2015-2016 Microchip Technology Inc.

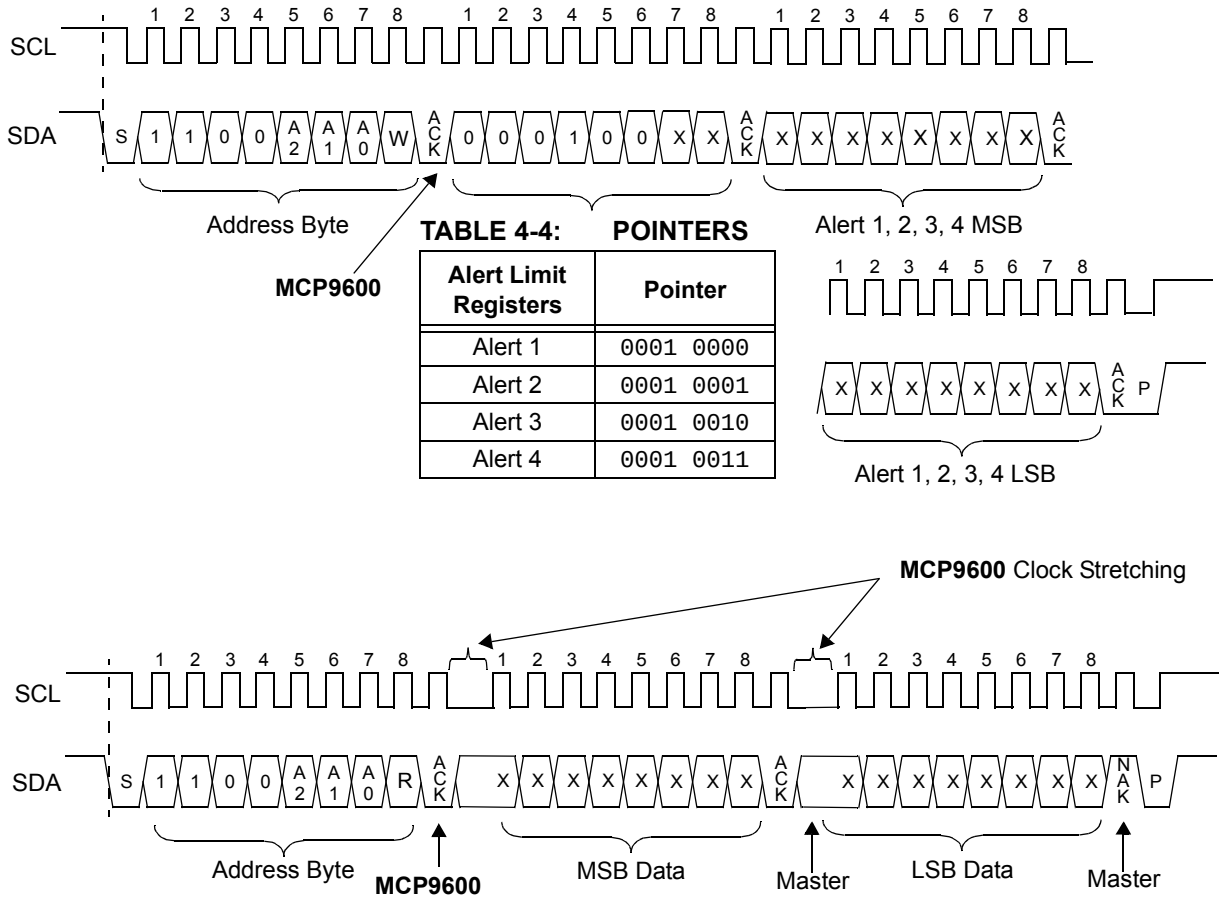

TABLE 4-4: POINTERS

Alert Limit Registers	Pointer
Alert 1	0001 0000
Alert 2	0001 0001
Alert 3	0001 0010
Alert 4	0001 0011

Note: this is an example pseudo routine:

```
i2c_start();                  // send START command
i2c_write(b'1100 0000');      //WRITE Command
                              //also, make sure bit 0 is cleared '0'
i2c_write(b'0001 00XX');      // Write Alert registers
i2c_write(b'XXXX XXXX');      // Write register Upper Byte
i2c_write(b'XXXX XXXX');      // Write register Lower Byte
i2c_stop();                   // send STOP command
i2c_start();                  // send START command
i2c_write(b'1100 0001');      //READ Command
                              //also, make sure bit 0 is set '1'
UpperByte = i2c_read(ACK);    // READ 8 bits
                              //and Send ACK bit
LowerByte = i2c_read(NAK);    // READ 8 bits
                              //and Send NAK bit
i2c_stop();                   // send STOP command
```

FIGURE 4-5: *Timing Diagram to Set a Register Pointer and Read a Two Byte Data.*

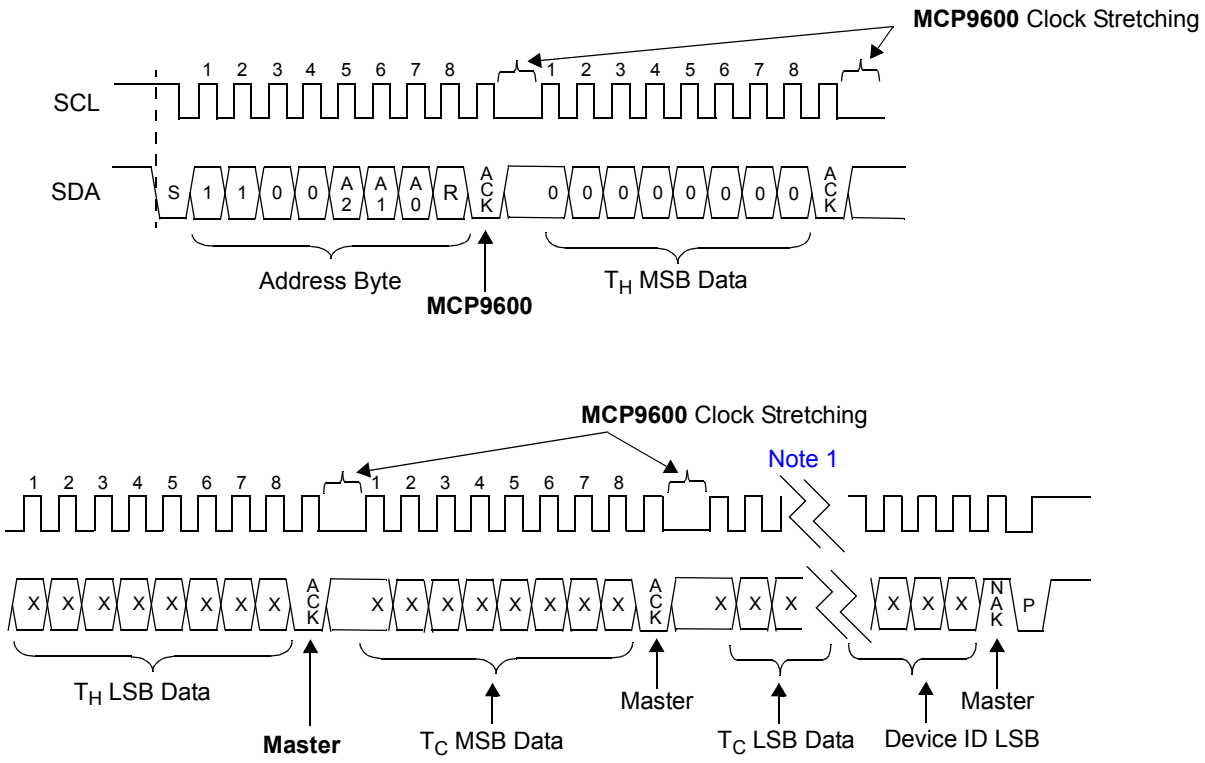

Note 1: All registers can be read sequentially starting from the previously set register pointer.

Note: this is an example pseudo routine:

```
i2c_start();                    // send START command
i2c_write(b'1100 0000');        // WRITE Command
                                // also, make sure bit 0 is cleared '0'
i2c_write(b'0000 0000');        // Write TH register to set the starting register for sequential read
i2c_stop();                     // send STOP command
i2c_start();                    // send START command
i2c_write(b'1100 0001');        // READ Command
                                // also, make sure bit 0 is set '1'
for (i=0; i<29, i++){
   Data_Buffer[i] = i2c_read(ACK);     // READ 8 bits
                                       // and Send ACK bit
}
Data_Buffer[i] = i2c_read(NAK);        // READ 8 bits
                                       // and Send NAK bit
i2c_stop();                            // send STOP command
```

FIGURE 4-6: *Timing Diagram to Sequential Read all Registers Starting from T_H Register.*

© 2015-2016 Microchip Technology Inc.

5.0 FUNCTIONAL DESCRIPTION

The MCP9600 temperature sensor consists of an 18-bit delta-sigma analog-to-digital converter which is used to measure the thermocouple voltage or EMF, a digital temperature sensor used to measure cold-junction or ambient temperature and a processor core which is used to compute the EMF to degree Celsius conversion using coefficients derived from NIST ITS-90 coefficients. Figure 5-1 shows a block diagram of how these functions are structured in the device.

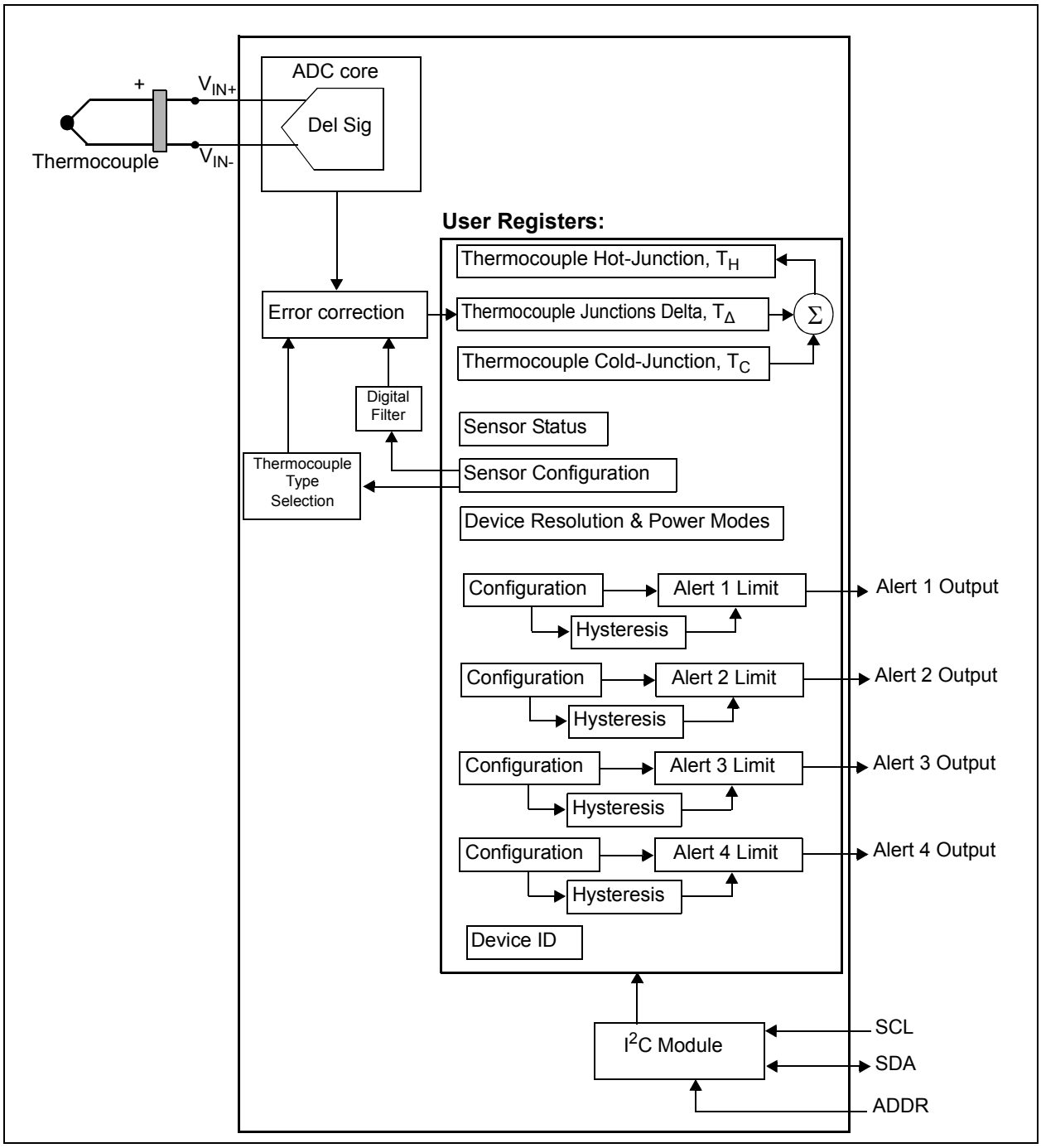

FIGURE 5-1: *Functional Block Diagram.*

The MCP9600 device has several registers that are user-accessible. These registers include the thermocouple temperature (cold-junction compensated), hot-junction temperature, cold-junction temperature, raw ADC data, user programmable Alert limit registers, and status and configuration registers.

The temperature and the raw ADC data registers are read-only registers, used to access the thermocouple and the ambient temperature data. In addition, the four Alert Temperature registers are individually controlled and can be used to detect a rising and/or a falling temperature change. If the ambient temperature drifts beyond the user-specified limits, the MCP9600 device outputs an alert flag at the corresponding pin (refer to **Section 5.3.3 "Alert configuration Registers"**). The Alert limits can also be used to detect critical temperature events.

The MCP9600 also provides a status and configuration registers which allow users to detect device statuses. The configuration registers provide various features such as adjustable temperature measurement resolution and Shutdown modes. The thermocouple types can also be selected using the configuration registers.

The registers are accessed by sending a Register Pointer to the MCP9600 using the serial interface. This is an 8-bit write-only pointer. Register 5-1 describes the pointer definitions.

REGISTER 5-1: REGISTER POINTER

U-0	U-0	U-0	U-0	W-0	W-0	W-0	W-0
—	—	—	—	P3	P2	P1	P0
bit 7							bit 0

Legend:			
R = Readable bit	W = Writable bit	U = Unimplemented bit, read as '0'	
-n = Value at POR	'1' = Bit is set	'0' = Bit is cleared	x = Bit is unknown

bit 7-4 **Unimplemented:** Write '0'

bit 3-0 **P<3:0>:** Pointer bits

0000 0000 = Thermocouple Hot-Junction Register - T_H
0000 0001 = Junctions Temperature Delta Register - T_Δ
0000 0010 = Cold-Junction Temperature Register - T_C
0000 0011 = Raw ADC Data
0000 0100 = Status
0000 0101 = Thermocouple Sensor Configuration
0000 0110 = Device Configuration
0000 1000 = Alert 1 Configuration
0000 1001 = Alert 2 Configuration
0000 1010 = Alert 3 Configuration
0000 1011 = Alert 4 Configuration
0000 1100 = Alert 1 Hysteresis - T_{HYST1}
0000 1101 = Alert 2 Hysteresis - T_{HYST2}
0000 1110 = Alert 3 Hysteresis - T_{HYST3}
0000 1111 = Alert 4 Hysteresis - T_{HYST4}
0001 0000 = Temperature Alert 1 Limit - T_{ALERT1}
0001 0001 = Temperature Alert 2 Limit - T_{ALERT2}
0001 0010 = Temperature Alert 3 Limit - T_{ALERT3}
0001 0011 = Temperature Alert 4 Limit - T_{ALERT4}
0010 0000 = Device ID/Rev Register

© 2015-2016 Microchip Technology Inc.

TABLE 5-1: SUMMARY OF REGISTERS AND BIT ASSIGNMENTS

Register	Pointer	bit 7	bit 6	bit 5	bit 4	bit 3	bit 2	bit 1	bit 0
Hot-Junction Temperature – T_H	00000000	SIGN	1024°C	512°C	256°C	128°C	64°C	32°C	16°C
		8°C	4°C	2°C	1°C	0.5°C	0.25°C	0.125°C	0.0625°C
Junctions Temperature Delta – T_Δ	00000001	SIGN	1024°C	512°C	256°C	128°C	64°C	32°C	16°C
		8°C	4°C	2°C	1°C	0.5°C	0.25°C	0.125°C	0.0625°C
Cold-Junction Temperature – T_C	00000010	SIGN				128°C	64°C	32°C	16°C
		8°C	4°C	2°C	1°C	0.5°C	0.25°C	0.125°C	0.0625°C
Raw data ADC	00000011	SIGN						bit 17	bit 16
		bit 15							bit 8
		bit 7							bit 0
Status	00000100	Flag, Burst Complete	Flag, T_H Updated	—	Flag, Input Range	Alert 4 Status	Alert 3 Status	Alert 2 Status	Alert 1 Status
Thermocouple Sensor Configuration	00000101	—	Thermocouple Type Select Type K, J, T, N, S, E, B, R			—	Filter Coefficients		
Device Configuration	00000110	Cold-Junc. Resolution	ADC Resolution		Burst Mode Temperature Samples			Shutdown Modes	
Alert 1 Configuration	00001000	Interrupt Clear	—	—	Monitor T_H or T_C	Detect Rising or Falling Temps	Active-High or Active-Low Output	Comparator or Interrupt Mode	Enable Alert Output
Alert 2 Configuration	00001001								
Alert 3 Configuration	00001010								
Alert 4 Configuration	00001011								
Alert 1 Hysteresis	00001100	128°C	64°C	32°C	16°C	8°C	4°C	2°C	1°C
Alert 2 Hysteresis	00001101								
Alert 3 Hysteresis	00001110								
Alert 4 Hysteresis	00001111								
Alert 1 Limit	00010000	SIGN	1024°C	512°C	256°C	128°C	64°C	32°C	16°C
		8°C	4°C	2°C	1°C	0.5°C	0.25°C	—	—
Alert 2 Limit	00010001	SIGN	1024°C	512°C	256°C	128°C	64°C	32°C	16°C
		8°C	4°C	2°C	1°C	0.5°C	0.25°C	—	—
Alert 3 Limit	00010010	SIGN	1024°C	512°C	256°C	128°C	64°C	32°C	16°C
		8°C	4°C	2°C	1°C	0.5°C	0.25°C	—	—
Alert 4 Limit	00010011	SIGN	1024°C	512°C	256°C	128°C	64°C	32°C	16°C
		8°C	4°C	2°C	1°C	0.5°C	0.25°C	—	—
Device ID/Rev	00100000	0	1	0	0	0	0	0	0
		Rev ID Major				Rev ID Minor			

5.1 Thermocouple Temperature Sensor Registers

This device integrates three temperature registers that are used to read the cold and hot-junction temperatures and the sum of the two junctions to output the absolute thermocouple temperature. In addition, the raw ADC data which is used to derive the thermocouple temperature is available. The following sections describe each register in detail.

5.1.1 THERMOCOUPLE TEMPERATURE REGISTER – T_H

This register contains the cold-junction compensated and error-corrected Thermocouple temperature in degree Celsius. The temperature data from this register is the absolute Thermocouple Hot-Junction Temperature T_H to the specified accuracy, **Section 1.0 "Electrical Characteristics"**. T_H is the sum of the values in T_Δ and T_C registers as shown in Figure 5-2.

EQUATION 5-1: TEMPERATURE CONVERSION

Temperature ≥ 0°C

$$T_H = (UpperByte \times 2^4 + LowerByte \times 2^{-4})$$

Temperature < 0°C

$$T_H = 1024 - (UpperByte \times 2^4 + LowerByte \times 2^{-4})$$

The temperature bits are in two's complement format, therefore, positive temperature data and negative temperature data are computed differently. Equation 5-1 shows how to convert the binary data to temperature in degree Celsius.

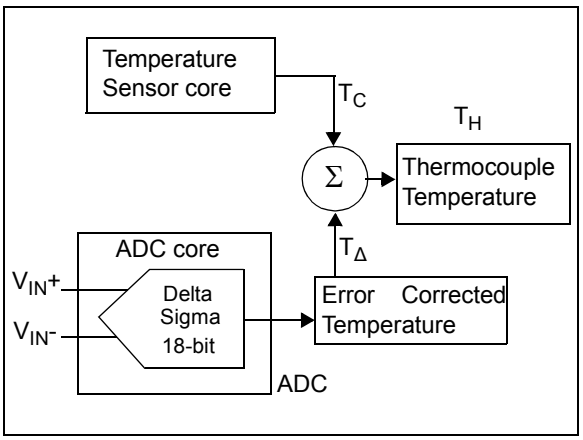

FIGURE 5-2: *Thermocouple Register's Block Diagram.*

REGISTER 5-2: THERMOCOUPLE TEMPERATURE REGISTER (READ ONLY)

R-0	R-0	R-0	R-0	R-0	R-0	R-0	R-0
SIGN	1024°C	512°C	256°C	128°C	64°C	32°C	16°C
bit 15							bit 8

R-0	R-0	R-0	R-0	R-0	R-0	R-0	R-0
8°C	4°C	2°C	1°C	0.5°C	0.25°C	0.125°C	0.0625°C
bit 7							bit 0

Legend:			
R = Readable bit	W = Writable bit	U = Unimplemented bit, read as '0'	
-n = Value at POR	'1' = Bit is set	'0' = Bit is cleared	x = Bit is unknown

bit 15 **SIGN:**

1 = T_A < 0°C
0 = T_A ≥ 0°C

bit 14-0 **T_H:** Data in two's complement format

This register contains the error corrected and cold-junction compensated Thermocouple temperature.

© 2015-2016 Microchip Technology Inc.

5.1.2 THERMOCOUPLE JUNCTIONS DELTA TEMPERATURE REGISTER – T_Δ

This register contains the error corrected Thermocouple Hot-Junction temperature without the Cold-Junction compensation. The error correction methodology uses several coefficients to convert the digitized Thermocouple EMF voltage to degree Celsius. Each Thermocouple type has a unique set of coefficients as specified by NIST, and these coefficients are available in the configuration register for user selection as shown in Figure 5-3.

EQUATION 5-2: TEMPERATURE CONVERSION

Temperature ≥ 0°C

$$T_\Delta = (UpperByte \times 2^4 + LowerByte \times 2^{-4})$$

Temperature < 0°C

$$T_\Delta = 1024 - (UpperByte \times 2^4 + LowerByte \times 2^{-4})$$

The temperature bits are in two's complement format, therefore, positive temperature data and negative temperature data are computed differently, as shown in Equation 5-2.

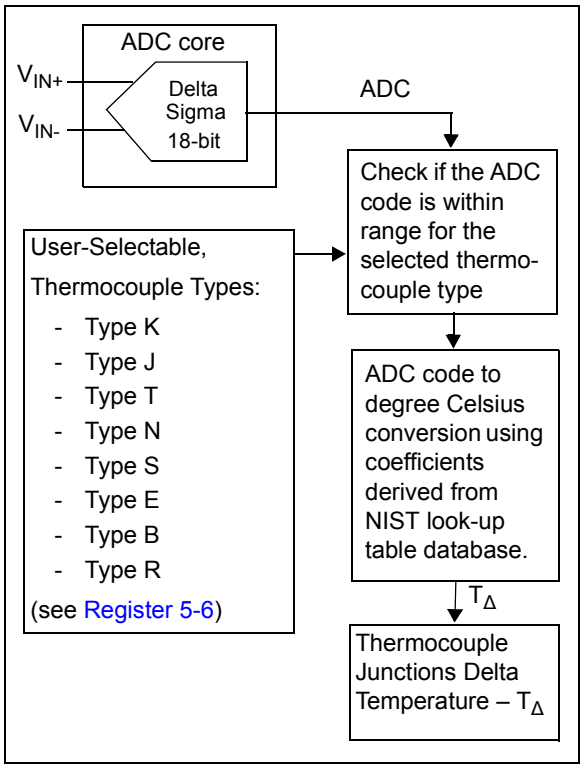

FIGURE 5-3: *Thermocouple Hot-Junction Register – T_Δ Block Diagram.*

REGISTER 5-3: HOT-JUNCTION TEMPERATURE REGISTER (READ ONLY)

R-0	R-0	R-0	R-0	R-0	R-0	R-0	R-0
SIGN	1024°C	512°C	256°C	128°C	64°C	32°C	16°C
bit 15							bit 8

R-0	R-0	R-0	R-0	R-0	R-0	R-0	R-0
8°C	4°C	2°C	1°C	0.5°C	0.25°C	0.125°C	0.0625°C
bit 7							bit 0

Legend:			
R = Readable bit	W = Writable bit	U = Unimplemented bit, read as '0'	
-n = Value at POR	'1' = Bit is set	'0' = Bit is cleared	x = Bit is unknown

bit 15 **SIGN:**
1 = $T_A < 0°C$
0 = $T_A \geq 0°C$

bit 14-0 **T_Δ:** Data in two's complement format
This register contains Thermocouple Hot-Junction temperature data.

5.1.3 COLD-JUNCTION/AMBIENT TEMPERATURE REGISTER (T_C)

The MCP9600 integrates an ambient temperature sensor which can be used to measure the Thermocouple Cold-Junction temperature. For accurate measurement, the MCP9600 will have to be placed at close proximity to the Thermocouple cold-junction to detect the junction ambient temperature. This is a 16-bit double buffered read-only register. The temperature resolution is user selectable to 0.0625°C/LSb or 0.25°C/LSb resolutions and setting the resolution determines the temperature update rate as shown in Table 5-2.

EQUATION 5-3: TEMPERATURE CONVERSION

Temperature ≥ 0°C

$$T_C = (UpperByte \times 2^4 + LowerByte \times 2^{-4})$$

Temperature < 0°C

$$T_C = 1024 - (UpperByte \times 2^4 + LowerByte \times 2^{-4})$$

The temperature bits are in two's complement format, therefore, positive temperature data and negative temperature data are computed differently, as shown in Equation 5-3.

TABLE 5-2: RESOLUTION VS. CONVERSION TIME

Resolution	Conversion Time (typical)	Register Bits (Note 1)
0.0625°C	250 ms	SSSS XXXX XXXX XXXX
0.25°C	63 ms	SSSS XXXX XXXX XX00

Note 1: 'S' is Sign and 'X' is unknown bit.

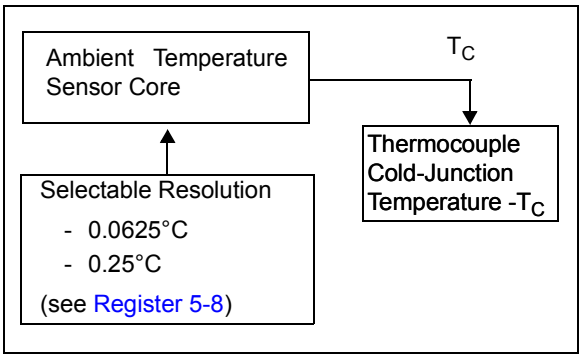

FIGURE 5-4: *Thermocouple Cold-Junction Register – T_C Block Diagram.*

REGISTER 5-4: COLD-JUNCTION TEMPERATURE REGISTER

R-0	R-0	R-0	R-0	R-0	R-0	R-0	R-0
SIGN				128°C	64°C	32°C	16°C
bit 15							bit 8

R-0	R-0	R-0	R-0	R-0	R-0	R-0	R-0
8°C	4°C	2°C	1°C	0.5°C	0.25°C	0.125°C	0.0625°C
bit 7							bit 0

Legend:			
R = Readable bit	W = Writable bit	U = Unimplemented bit, read as '0'	
-n = Value at POR	'1' = Bit is set	'0' = Bit is cleared	x = Bit is unknown

bit 15-12 **SIGN:**

1 = $T_A < 0°C$
0 = $T_A \geq 0°C$

bit 11-0 **T_C:** Data in two's complement format

This register contains Thermocouple Cold-Junction temperature or the device ambient temperature data. Bits 1 and 0 may remain clear '0' depending on the status of the resolution register.

© 2015-2016 Microchip Technology Inc.

5.1.4 ANALOG TO DIGITAL CONVERTER – ADC

The MCP9600 uses an 18-bit Delta Sigma Analog-to-Digital converter to digitize the Thermocouple EMF voltage and the data is available in the ADC register. The ADC measurement resolution is selectable which enables the user choose faster conversion times with reduced resolution. This feature is useful to detect fast transient temperatures.

TABLE 5-3: ADC RESOLUTION (Note 2)

Resolution/ Sensitivity (typical)	Conversion Time (typical)	Raw ADC Register Bit Format (Note 1)
18 bit/2 µV	320 ms	SSSS SSSX XXXX XXXX XXXX XXXX
16 bit/8 µV	80 ms	SSSS SSSX XXXX XXXX XXXX XX00
14 bit/32 µV	20 ms	SSSS SSSX XXXX XXXX XXXX 0000
12 bit/128 µV	5 ms	SSSS SSSX XXXX XXXX XX00 0000

Note 1: 'S' is the Sign bit and 'X' is the ADC data bit.

2: See **Section 6.2.2 "Conversion Time vs. Self-Heat"**.

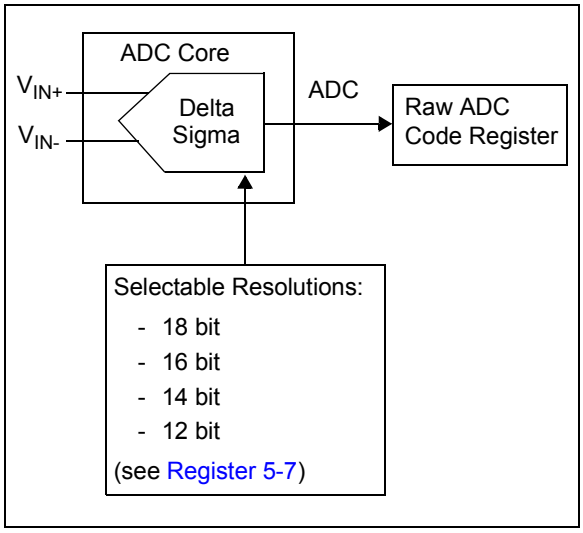

FIGURE 5-5: *Delta Sigma Analog to Digital Converter, ADC Core – Block Diagram.*

REGISTER 5-5: SAMPLE: 24-BIT REGISTER

R-0	R-0	R-0	R-0	R-0	R-0	R-0	R-0
SIGN						ADC Data	
bit 23							bit 16

R-0	R-0	R-0	R-0	R-0	R-0	R-0	R-0
ADC Data							
bit 15							bit 8

R-0	R-0	R-0	R-0	R-0	R-0	R-0	R-0
ADC Data							
bit 7							bit 0

Legend:			
R = Readable bit	W = Writable bit	U = Unimplemented bit, read as '0'	
-n = Value at POR	'1' = Bit is set	'0' = Bit is cleared	x = Bit is unknown

bit 23-0 **ADC Data<23:0>:** Raw ADC Data, including sign bits

5.2 Sensor Status and Configuration Registers

This device provides various temperature and measurement status bits which can be monitored regularly by the master controller. In addition, this device integrates various user programmable features which can be useful to develop complex thermal management applications. The following sections describe each features in detail.

5.2.1 STATUS REGISTER

The Status register contains several flag bits that indicate statuses, such as temperature alert, the ADC input range status for the selected thermocouple type and the temperature register update status for both single conversion or burst mode conversions.

REGISTER 5-6: STATUS REGISTER

R/W-0	R/W-0	R-0	R-0	R-0	R-0	R-0	R-0
Flag, Burst Complete	Flag, T_H Update	—	Flag, Input Range	Alert 4 Status	Alert 3 Status	Alert 2 Status	Alert 1 Status
bit 7							bit 0

Legend:			
R = Readable bit	W = Writable bit	U = Unimplemented bit, read as '0'	
-n = Value at POR	'1' = Bit is set	'0' = Bit is cleared	x = Bit is unknown

bit 7 **Burst Complete, Flag bit:** Burst mode Conversions Status flag
1 = T_Δ register Burst mode Conversions Complete
0 = Writing 0 has no effect
Once Burst mode is enabled, this bit is normally set after the first Burst is complete. User can clear it and poll the bit periodically until the next Burst of temperature conversions is complete (see Register 5-8).

bit 6 **T_H update, Flag bit:** Temperature Update flag
1 = Temperature Conversion Complete
0 = Writing 0 has no effect
This bit is normally set. User can clear it and poll the bit until the next temperature conversion is complete.

bit 5 **Unimplemented:** Read as "0".

bit 4 **Input Range, Flag bit:** ADC Input Voltage Range Detection bit (READ ONLY)
1 = The input voltage (or the Thermocouple EMF Voltage) exceeds the range for the selected Thermocouple type
0 = The input voltage (or the Thermocouple EMF Voltage) is within measurement range for the selected Thermocouple type
If this bit is set, then the MCP9600 does not convert the input voltage (EMF) to Degree Celsius (Temperature data conversion is bypassed). Both T_Δ and T_H registers hold the previous temperature data.

bit 3 **Alert 4 Status** (READ ONLY)
1 = $T_X > T_{ALERT4}$
0 = $T_X \leq T_{ALERT4}$
Where: T_X is either T_H or T_C (User selectable, see Register 5-10)

bit 2 **Alert 3 Status** (READ ONLY)
1 = $T_X > T_{ALERT3}$
0 = $T_X \leq T_{ALERT3}$
Where: T_X is either T_H or T_C (User selectable, see Register 5-10)

bit 1 **Alert 2 Status** (READ ONLY)
1 = $T_X > T_{ALERT2}$
0 = $T_X \leq T_{ALERT2}$
Where: T_X is either T_H or T_C (User selectable, see Register 5-10)

bit 0 **Alert 1 Status** (READ ONLY)
1 = $T_X > T_{ALERT1}$
0 = $T_X \leq T_{ALERT1}$
Where: T_X is either T_H or T_C (User selectable, see Register 5-10)

© 2015-2016 Microchip Technology Inc.

5.2.2 THERMOCOUPLE SENSOR CONFIGURATION REGISTER

The MCP9600 sensor configuration register is used to select the thermocouple sensor types and to select the digital filter options. This device supports eight thermocouple types. Each type has a unique set of error correction coefficients that are derived from the NIST Thermocouple EMF voltage conversion database.

In addition, this device integrates a first order recursive Infinite Impulse Response (IIR filter), also known as Exponential Moving Average (EMA). The filter uses the current new temperature sample and the previous filter output to calculate the next filter output. It also adds more weight to the current temperature data, allowing a faster filter response to the immediate change in temperature. This feature can be used to filter out fast thermal transients or thermal instability at the Thermocouple Hot-Junction temperature. Writing this register resets the filter.

The filter equation is shown in Equation 5-4 and the filter coefficient n is user selectable from level 0 to 7. A coefficient of 0 disables the filter function, and 7 provides maximum digital filter. Figure 5-6 shows the filter response to a step function, which can be used to extrapolate the filter performance to various temperature changes.

EQUATION 5-4: DIGITAL FILTER

$$Y = k \times X + (1 - k) \times Y_{-1}$$

$$k = 2/(2^n + 1)$$

Where:

Y = New filtered temperature in T_Δ

X = Current, unfiltered hot-junction temperatures

Y_{-1} = Previous filtered temperature

n = User selectable filter coefficient

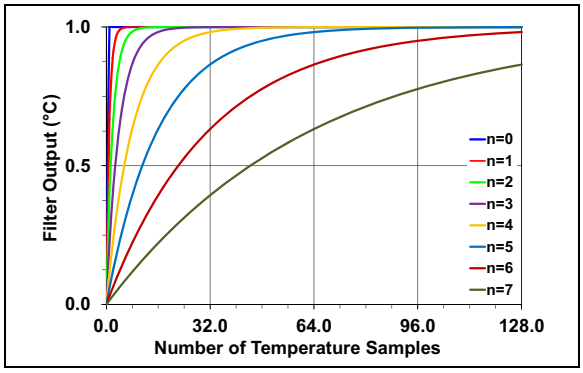

FIGURE 5-6: *Filter Step Response.*

REGISTER 5-7: SENSOR CONFIGURATION REGISTER

R-0	R/W-0	R/W-0	R/W-0	R-0	R/W-0	R/W-0	R/W-0
—	Thermocouple Type Select Type K, J, T, N, S, E, B, R			—	Filter Coefficients		
bit 7							bit 0

Legend:			
R = Readable bit	W = Writable bit	U = Unimplemented bit, read as '0'	
-n = Value at POR	'1' = Bit is set	'0' = Bit is cleared	x = Bit is unknown

bit 7 **Unimplemented:** Write '0'

bit 6-4 **Thermocouple Type:**
000 = Type K
001 = Type J
010 = Type T
011 = Type N
100 = Type S
101 = Type E
110 = Type B
111 = Type R

bit 3 **Unimplemented:**

bit 2-0 **Filter coefficient - n:**
000 = n = 0 - Filter Off
001 = n = 1 - Minimum Filter
010 = n = 2
011 = n = 3
100 = n = 4 - Mid Filter
101 = n = 5
110 = n = 6
111 = n = 7 - Maximum Filter

5.2.3 DEVICE CONFIGURATION REGISTER

The Device Configuration register allows user to configure various functions such as sensor measurement resolutions and power modes. The resolution register is used to select the sensor resolution for the desired temperature conversion time. When resolutions are changed, the change takes effect when the next measurement cycle begins.

This device integrates two low-power operating modes, Shutdown Mode and Burst Mode, which can be selected using bit 0 and bit 1. When the shutdown mode is executed, all power consuming activities are disabled and the operating current remains at I_{SHDN}. During the Shutdown mode all registers are accessible, however, I^2C activity on the bus increases the current.

The Burst mode enables users to execute a given number of temperature samples (defined by bits 4-2) before entering Shutdown mode. Each temperature sample is compared to the user set alert temperature limits, and if the alert conditions are true then the device asserts the corresponding alert output. In addition, if the filter option is enabled, then the filter engine is applied to each temperature sample. The alert thresholds are also compared to the filtered temperature data. This feature is useful for battery power applications where temperature is sampled upon request from the master controller.

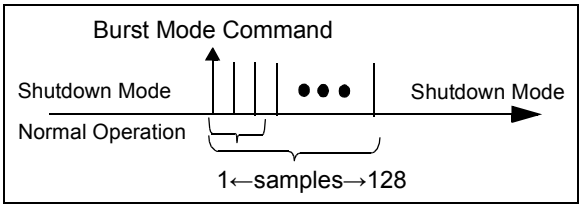

FIGURE 5-7: *Burst Mode Operation.*

REGISTER 5-8: DEVICE CONFIGURATION REGISTER

R/W-0	R/W-0	R/W-0	R/W-0	R/W-0	R/W-0	R/W-0	R/W-0
Cold-Junction Resolution	ADC Resolution		Burst Mode Temperature Samples			Shutdown Modes	
bit 7							bit 0

Legend:			
R = Readable bit	W = Writable bit	U = Unimplemented bit, read as '0'	
-n = Value at POR	'1' = Bit is set	'0' = Bit is cleared	x = Bit is unknown

bit 7 **Cold-Junction / Ambient Sensor Resolution** (see **Table 5-2**):
0 = 0.0625°C
1 = 0.25°C

bit 6-4 **ADC Measurement Resolution** (see **Table 5-3**):
00 = 18-bit Resolution
01 = 16-bit Resolution
10 = 14-bit Resolution
11 =12-bit Resolution

bit 3 **Number of Temperature Samples:**
000 = 1 Sample
001 = 2 Samples
010 = 4 Samples
011 = 8 Samples
100 = 16 Samples
101 = 32 Samples
110 = 64 Samples
111 = 128 Samples

bit 2-0 **Shutdown Modes:**
00 = Normal Operation
01 = Shutdown Mode
10 = Burst Mode
11 = Unimplemented: this setting has no effect

© 2015-2016 Microchip Technology Inc.

5.3 Temperature Alert Registers

This device provides four temperature alert registers that are individually configured, which allow users to monitor multiple temperature zones with a single device. The following sections describe each alert features in detail.

5.3.1 ALERT LIMIT REGISTERS

This device integrates four individually-controlled temperature Alert Limit Registers. Each alert limit is individually set to detect a rising or a falling temperature or either the Thermocouple temperature register T_H or the Cold-Junction T_C registers. The corresponding Alert Limit Outputs can also be enabled for temperature status indicators. All alert functions are configured using the Alert Limit configuration registers, Register 5-11, and the alert output hysteresis is set using the Alert Hysteresis registers, Register 5-10.

TABLE 5-4: ALERT LIMIT REGISTERS

Register	Register Pointer
Alert 1 Limit – T_{ALERT1}	0001 0000
Alert 2 Limit – T_{ALERT2}	0001 0001
Alert 3 Limit – T_{ALERT3}	0001 0010
Alert 4 Limit – T_{ALERT4}	0001 0011

REGISTER 5-9: ALERT LIMITS 1, 2, 3 AND 4 REGISTERS

R/W-0	R/W-0	R/W-0	R/W-0	R/W-0	R/W-0	R/W-0	R/W-0
SIGN	1024°C	512°C	255°C	128°C	64°C	32°C	16°C
bit 15							bit 8

R/W-0	R/W-0	R/W-0	R/W-0	R/W-0	R/W-0	R/W-0	R/W-0
8°C	4°C	2°C	1°C	0.5°C	0.25°C	—	—
bit 7							bit 0

Legend:			
R = Readable bit	W = Writable bit	U = Unimplemented bit, read as '0'	
-n = Value at POR	'1' = Bit is set	'0' = Bit is cleared	x = Bit is unknown

bit 15 **SIGN:**
1 = $T_A < 0°C$
0 = $T_A \geq 0°C$

bit 14-2 **Alert 1, 2, 3 and 4:** Data in two's complement format

bit 1-0 **Unimplemented:**

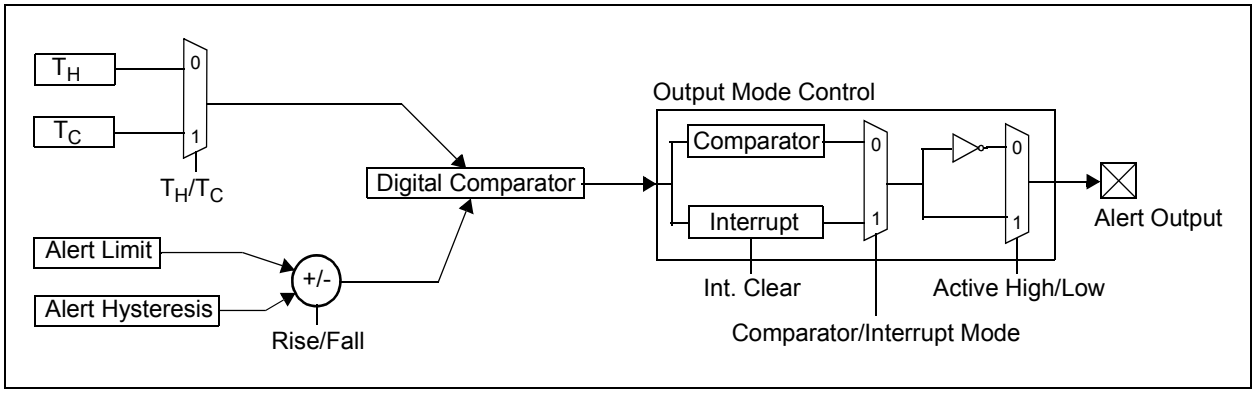

FIGURE 5-8: *Alert Limits Set to Detect T_H and T_C.*

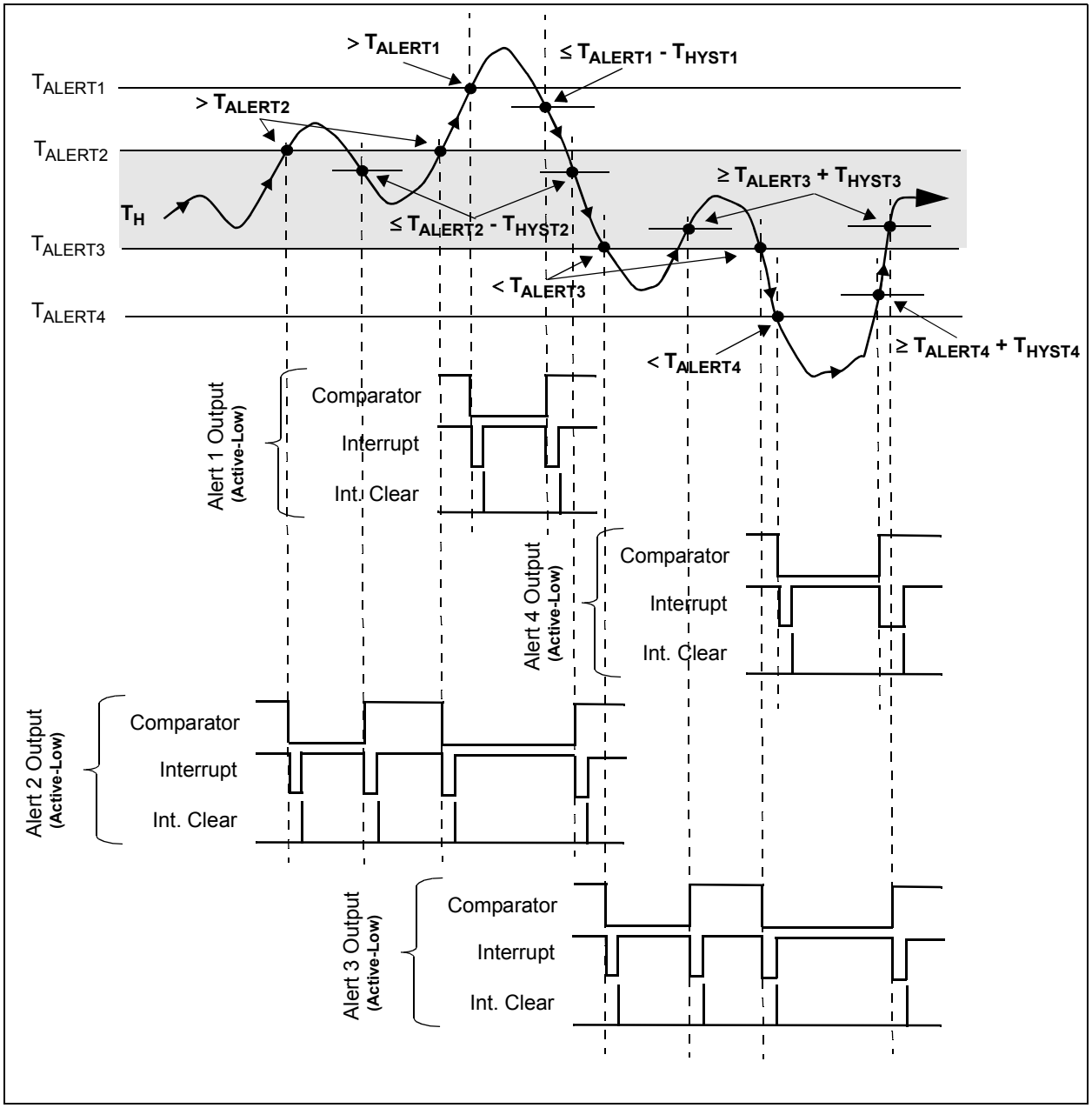

FIGURE 5-9: *Alert Limits Boundary Conditions and Output Characteristics when Set to Detect T_H.*

© 2015-2016 Microchip Technology Inc.

5.3.2 ALERT HYSTERESIS REGISTER

This device integrates four individually controlled temperature Alert Hysteresis registers for each alert output, with a range of 0°C to 255°C.

The alert hysteresis directions are set using bit 3 of the corresponding Alert Configuration registers (Register 5-10) to detect rising or falling temperatures. For rising temperatures, hysteresis range is below the alert limit where as for falling temperatures, the hysteresis range is above the alert limit as shown on Figure 5-10.

TABLE 5-5: ALERT HYSTERESIS REGISTERS

Register	Register Pointer
Alert 1 Hysteresis – T_{HYST1}	0000 1100
Alert 2 Hysteresis – T_{HYST2}	0000 1101
Alert 3 Hysteresis – T_{HYST3}	0000 1110
Alert 4 Hysteresis – T_{HYST4}	0000 1111

REGISTER 5-10: ALERT 1, 2, 3 AND 4 HYSTERESIS REGISTER

R/W-0	R/W-0	R/W-0	R/W-0	R/W-0	R-0	R-0	R-0
128°C	64°C	32°C	16°C	8°C	4°C	2°C	1°C
bit 7							bit 0

Legend:			
R = Readable bit	W = Writable bit	U = Unimplemented bit, read as '0'	
-n = Value at POR	'1' = Bit is set	'0' = Bit is cleared	x = Bit is unknown

bit 7-0 **Alert Hysteresis:** Alert Hysteresis range 0x00 to 0xFF, which represents 1°C to 255°C.

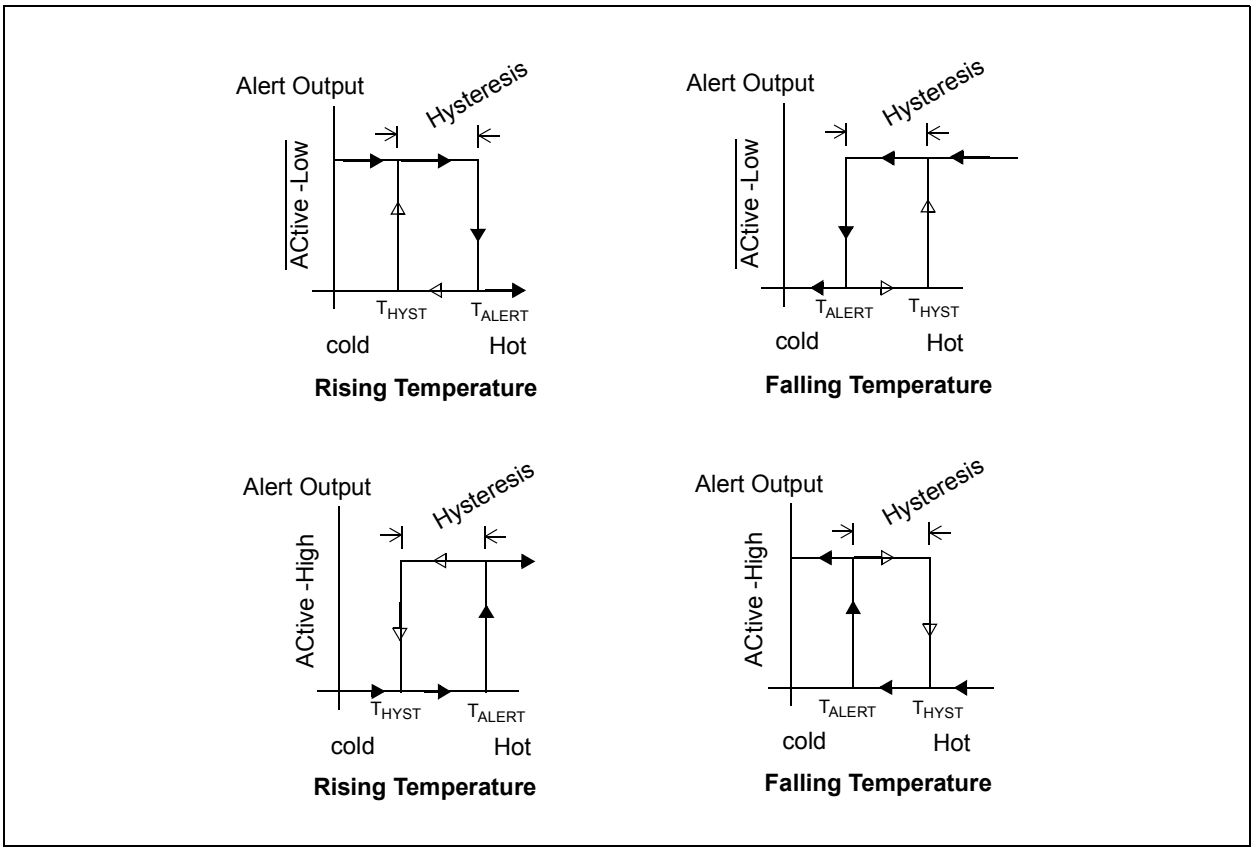

FIGURE 5-10: *Graphical Description of Alert Output Hysteresis Direction.*

5.3.3 ALERT CONFIGURATION REGISTERS

This device integrates four individually-controlled temperature Alert Outputs. Each output is configured for the corresponding alert output using the Alert Output configuration registers.

The configuration registers are used to enable each output, select the alert function mode as Comparator or Interrupt mode, Active-High or Active-Low output, detect rising or falling temperatures, and detect T_H or T_C temperature registers.

The Comparator mode is useful for thermostat-type applications, such as on/off switches for fan controllers, buzzer or LED indicators. The Alert output asserts and deasserts when the temperature exceeds the user-specified limit and the user-specified hysteresis limit. The Interrupt mode is useful for interrupt driven microcontroller-based systems. The Alert Outputs are asserted each time the temperature exceeds the user specified Alert limit and Hysteresis limits.

The microcontroller will have acknowledged the interrupt signal from the corresponding alert output by clearing the interrupt using bit 7 of the corresponding configuration register.

The Rise/Fall bit (bit 3) and the temperature selection bit (bit 4) can be used to detect and maintain the Thermocouple temperature or the Cold-Junction temperature to the desired temperature window.

TABLE 5-6: ALERT CONFIG. REGISTERS

Register	Register Pointer
Alert 1 Configuration	0000 1000
Alert 2 Configuration	0000 1001
Alert 3 Configuration	0000 1010
Alert 4 Configuration	0000 1011

REGISTER 5-11: ALERT 1, 2, 3 AND 4 CONFIGURATION REGISTER

R/W-0	R/W-0	R/W-0	R/W-0	R/W-0	R-0	R-0	R-0
Interrupt Clear	—	—	Monitor T_H/T_C	Rise/Fall	Active Hi/Lo	Comp/Int.	Alert Enable
bit 7							bit 0

Legend:			
R = Readable bit	W = Writable bit	U = Unimplemented bit, read as ‘0’	
-n = Value at POR	‘1’ = Bit is set	‘0’ = Bit is cleared	x = Bit is unknown

bit 7 **Interrupt Clear:**
1 = Clears Interrupt flag (forced ‘0’ by device)
0 = Normal State or Cleared State

bit 6-5 **Unimplemented:** Read as ‘0’

bit 4 **Monitor T_H or T_C:**
1 = Alert Monitor for T_C Cold-Junction Sensor
0 = Alert Monitor for T_H Thermocouple Temperature

bit 3 **Alert Temperature Direction, Rise/Fall:**
1 = Alert Limit for Rising or Heating Temperatures
0 = Alert Limit for Falling or Cooling Temperatures

bit 2 **Alert State:**
1 = Active High
0 = Active Low

bit 1 **Alert Mode:**
1 = Interrupt Mode: Interrupt Clear bit (bit 7) must be set to deassert the alert output
0 = Comparator Mode

bit 0 **Alert Enable:**
1 = Alert Output is Enabled
0 = Alert Output is Disabled

© 2015-2016 Microchip Technology Inc.

5.3.4 DEVICE ID AND REVISION ID REGISTER

The Device ID and Revision ID register is a 16-bit read-only register, which can be used to identify this device among other devices on the I^2C bus. The upper 8-bit indicates the device ID of 0x40, while the lower 8-bit indicates the device revision. The device revision byte is divided to the nibbles, where the upper nibble indicates the major revision and the lower nibble indicates minor revisions for each major revision. The initial release is indicated by a major revision of 1 and a minor revision of 0, or 0x4010.

REGISTER 5-12: DEVICE ID AND REVISION ID REGISTER

R-0	R-1	R-0	R-0	R-0	R-0	R-0	R-0
Device ID							
bit 15							bit 8

R-0	R-0	R-0	R-1	R-0	R-0	R-0	R-0
Major				Minor			
bit 7							bit 0

Legend:			
R = Readable bit	W = Writable bit	U = Unimplemented bit, read as ‘0’	
-n = Value at POR	‘1’ = Bit is set	‘0’ = Bit is cleared	x = Bit is unknown

bit 15-8 **Device ID: 0x40 (hex)**

bit 7-0 **Revision: 0x10 (hex)**

Release, Revision 1.0

NOTES:

© 2015-2016 Microchip Technology Inc.

6.0 APPLICATION INFORMATION

6.1 Layout Considerations

The MCP9600 does not require any additional components to digitize thermocouples. However, it is recommended that a decoupling capacitor of 0.1 µF to 1 µF be used between the V_{DD} and GND pins. A high-frequency ceramic capacitor is recommended. It is necessary for the capacitor to be located as close as possible to the V_{DD} and ground pins of the device in order to provide effective noise protection.

In addition, good PCB layout is key for better thermal conduction from the PCB temperature to the sensor die. The PCB provides thermal conduction from the die to the thermocouple cold-junction, therefore the component placement positioning and the copper layout techniques are key for optimum cold-junction compensation. The recommended implementation for optimum temperature sensitivity is to extend copper ground pad around the device pins, as shown in Figure 6-1.

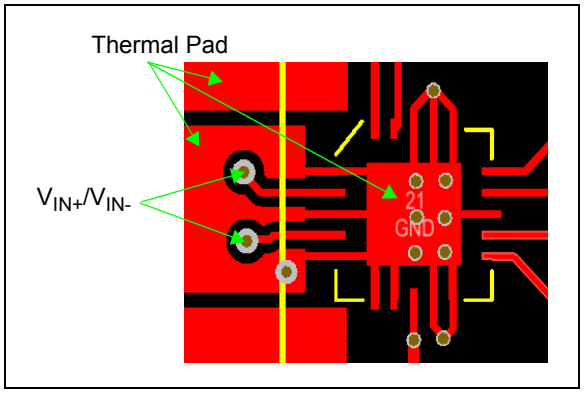

FIGURE 6-1: *Recommended PCB Layout.*

6.1.1 COLD-JUNCTION COMPENSATION

Copper provides better thermal conductivity than PCB FR4 to the ambient temperature. It also provides better thermal conduction than the 5 mm x 5 mm MQFN plastic package which houses the temperature sensor die. Therefore, when connecting the thermocouple wire to the PCB, it is recommended to place ground copper between the thermocouple connector footprint, where dissimilar conductive material is attached to the PCB and the MCP9600 exposed pad. This allows temperature to stabilize to the local ambient temperature (between the thermocouple connector junction and the PCB copper) and the copper trace conducts the temperature to the package exposed pad where the temperature sensor die is placed. The placement of the sensor exposed pad to the thermocouple connector junction greatly determines the temperature sensor's sensitivity to the local junction temperature changes. Figure 6-2 demonstrates the recommended techniques.

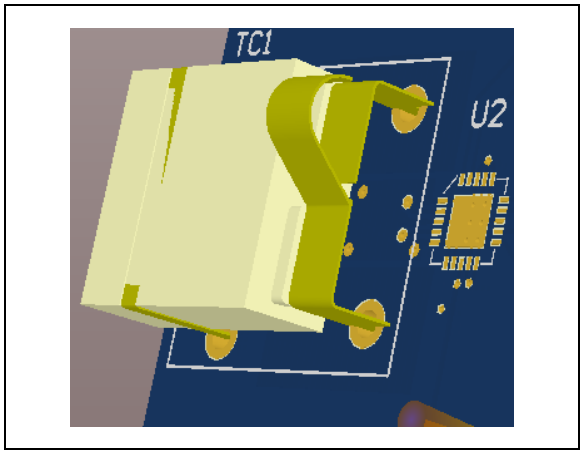

FIGURE 6-2: *Recommended Component Placement.*

6.2 Thermal Considerations

The potential for self-heating errors exist if the MCP9600 SDA, SCL and Alert outputs are heavily loaded (high current) with pull-up resistors and circuits such as high-current LEDs or buzzer loads. The temperature rise due to self-heat increases the ambient temperature sensor output, resulting in an increased temperature offset error compared to the thermocouple cold-junction ambient temperature.

6.2.1 SELF-HEAT DURING OPERATION

During normal operation, the typical self-heating error is negligible due to the relatively small current consumption of the MCP9600. However, this device integrates a processor to compute the equations necessary to convert the thermocouple EMF voltage to degrees Celsius. The processor also maintains the I^2C bus. During I^2C communication, the device operating current increases to I_{DD} = 1.5 mA (typical), I^2C Active specification. If the bus is continually polled for data at frequent intervals, then the processor power dissipates heat to the temperature sensor and the effect of self-heat can be detected. Therefore, the recommended implementation is to maintain polling to no more than three times per temperature conversion period of 320 ms, or use the Burst Mode feature to manage self heat (**Section 6.2.3 "Using Burst Mode to Manage Self-Heat"**). Equation 6-1 can also be used to determine the effect of self-heat.

EQUATION 6-1: EFFECT OF SELF-HEATING

$$T_\Delta = \theta_{JA}(V_{DD} \bullet I_{DD})$$

$$T_\Delta = \theta_{JC}(V_{DD} \bullet I_{DD})$$

$$T_\Delta = T_J - T_A$$

Where:

T_J = Junction Temperature

T_A = Ambient Temperature

θ_{JA} = Package Thermal Resistance - Junction to Ambient

θ_{JC} = Package Thermal Resistance - Junction to Case

At room temperature (T_A = +25°C) with maximum I_{DD} = 2.5 mA (maximum) and V_{DD} = 3.3V, the self-heating due to power dissipation T_Δ is 0.32°C for the MQFN package.

6.2.2 CONVERSION TIME VS. SELF-HEAT

Once the ADC completes digitization, the processor initiates the data computation routine for t_{CALC} which also increases I_{DD}. During the 18-bit ADC conversion time (3 SPS, Samples per Second), the increased current lasts for approximately 5% of the one second period. The effect of self-heat for the total power consumed per second, including the 5% t_{CALC} period, is negligible. However, as the ADC resolution is reduced from 18-bit to 16-bit, the power consuming t_{CALC} period increases to 20% per second. This change in resolution adds approximately 0.04°C (typical) temperature error due to self-heat. Table 6-1 provides an estimate for self-heat for all resolutions using Equation 6-1.

In order to reduce the effects of self heat for lower resolution settings, the Burst Mode feature is recommended to manage the effects of self-heat.

TABLE 6-1: ADC RESOLUTION VS. SELF-HEAT

Resolution	SPS (typ.)	t_{CALC} Duration per Second	T_Δ
18 bit	3	5%	0.0096°C
16 bit	15	20%	0.0384°C
14 bit	60	80%	0.1536°C
12 bit	240	100%	0.1920°C

Note: V_{DD} = 3.3V, and I_{DD} = 1.5 mA (typical).

6.2.3 USING BURST MODE TO MANAGE SELF-HEAT

The Burst mode feature is useful to manage power dissipation while maintaining the device sensitivity to changes in temperature (**Section 5.2.3 "Device Configuration Register"**). While the device is in low power, or Shutdown mode, the master controller executes Burst-mode to sample temperature. The number of temperature samples and the measurement resolution settings are selected while executing the command. While in Burst-mode, if the temperature data exceeds the Alert Limits the device asserts the corresponding Alert Output. The alert outputs are used so the master controller does not need to continually poll the latest temperature data, and potentially increase the temperature error.

In addition, with some applications monitoring several hundred degrees of temperature changes, 18-bit resolution may not be necessary. In this case, a fewer number of Burst samples with reducing the resolution enables the user to monitor fast transient temperatures at the Burst intervals. 12-bit ADC resolution provides approximately 3°C resolution (for Type K), and a new sample of temperature data is computed at approximately 20 ms intervals. Therefore, the number of Burst mode samples per second can be selected to manage the effects of self-heat using these estimates.

The temperature conversion status during Burst mode can also be momentarily polled (using bit 7 of the **Section 5.2.1 "Status Register"**) to detect whether the on-going sample bursts are completed. The master controller may terminate an on-going burst by executing a Shutdown Command or reset the Burst mode by sending another Burst Command.

6.2.4 ALERT OUTPUTS

The Alert outputs are intended to drive high impedance loads. Typically, the outputs are connected to a microcontroller input pin. However, if the outputs are used to drive indicators, such as LEDs or buzzers, then a buffer circuit is recommended in order to minimize the effects of self-heat due to the applied load (see Figure 6-3).

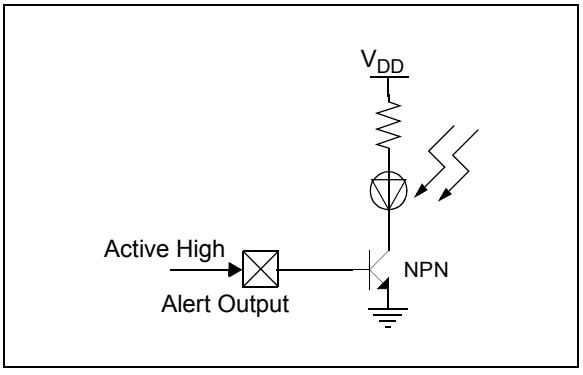

FIGURE 6-3: *Alert Output Buffer.*

© 2015-2016 Microchip Technology Inc.

6.3 Device Features

6.3.1 I²C ADDRESSING

The MCP9600 supports up to eight devices on the I²C bus. Applications such as large thermal management racks with several thermocouple sensor interfaces are able to monitor various temperature zones with minimal pin-count microcontrollers. This reduces the total solution cost, while providing a highly accurate thermal management solution using the MCP9600.

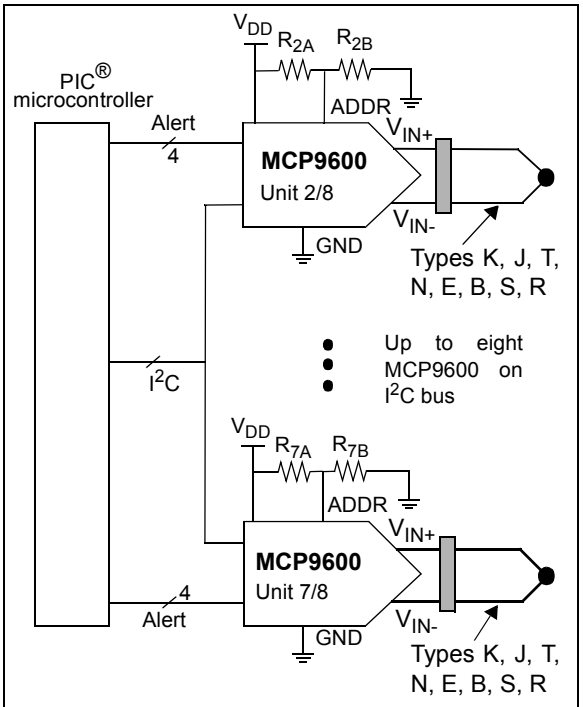

TABLE 6-2: RECOMMENDED RESISTOR VALUES FOR I²C ADDRESSING

Device #	Command Byte	Values	
		R_{XA} (kΩ)	R_{XB} (kΩ)
1	1100 000X	ADDR pin tied to GND	
2	1100 001X	R_{2A} = 10	R_{2B} = 2.2
3	1100 010X	R_{3A} = 10	R_{3B} = 4.3
4	1100 011X	R_{4A} = 10	R_{4B} = 7.5
5	1100 100X	R_{5A} = 10	R_{5B} = 13
6	1100 101X	R_{6A} = 10	R_{6B} = 22
7	1100 110X	R_{7A} = 10	R_{7B} = 43
8	1100 111X	ADDR pin tied to V_{DD}	

Note: Standard 5% tolerance resistors are used in the table, however, 1% tolerance resistors provide better ratio matching.

FIGURE 6-4: *I²C Address Selection Implementation.*

6.3.2 INPUT IMPEDANCE

The MCP9600 uses a switched-capacitor amplifier input stage to gain the input signal to a maximum resolution of 2 µV/LSb at 18-bit ADC setting. An internal input capacitor is used for charge storage. The differential input impedance Z_{IN_DF} is dominated by the sampling capacitor and the switched-capacitor amplifier sampling frequency. During sampling period, the charging and discharging of the sampling capacitor creates dynamic input currents at the input pins. Adding a 10-100 nF capacitor between the inputs can improve stability.

Since the sampling capacitor is only switching to the input pins during a conversion process, the input impedance is only valid during conversion periods. During low-power or Shutdown mode, the input amplifier stage is disabled, therefore the input impedance is Z_{IN_CM}, which is due to the leakage current from ESD protection diodes, as shown in Figure 6-5.

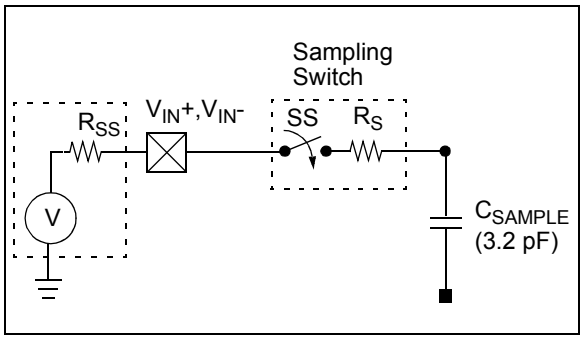

FIGURE 6-5: *Thermocouple Input Stage.*

6.3.3 OPEN AND SHORT DETECTION CIRCUITS

External circuits can be added to detect the thermocouple status as open (physically disconnected) or as short (thermocouple wire in contact with the system ground or V_{DD}). If a passive circuit is added to the input stage, then the circuit loading effect to the MCP9600 ADC inputs must be considered. System calibration is also required to ensure proper accuracy. In addition, external loads can degrade the device performance, such as input offset, gain, and Integral Nonlinearity (INL) errors. If a low impedance active circuit is added, then both offset and gain errors must be calibrated.

6.3.3.1 Open-Circuit Detection Technique

For open circuit detection, the Input Range Flag bit, bit 4 of the Status Register (Register 5-6), can be used to detect open-circuit conditions. This would require a few external resistors as shown in Figure 6-6. The passive circuit does not affect the MCP9600 accuracy (The recommended value for R_B set to 10 kΩ). When the Thermocouple is connected, the input common-mode voltage is $0.5*V_{DD}$. And when the Thermocouple is disconnected, the voltage at V_{IN+}

input is 0.66*V_{DD} and the voltage at the V_{IN-} input is pulled-down to V_{SS}. This change forces the Input Range Flag bit to be set. The master controller can momentarily poll the status bit to detect the open-circuit condition.

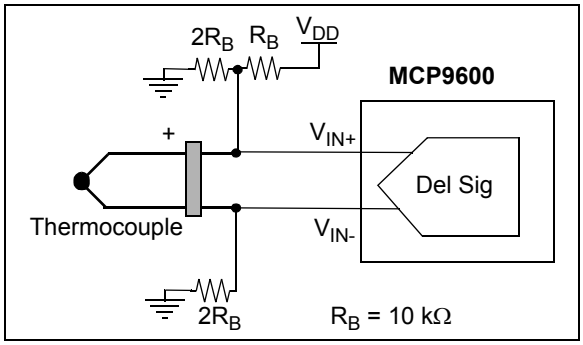

FIGURE 6-6: *Adding Open-Circuit Detection Resistors.*

6.3.4 ALIASING AND ANTI-ALIASING FILTER

Aliasing occurs when the input signal contains time-varying signal with frequency greater than half the sample rate. In the aliasing conditions, the ADC can output unexpected codes. The ADC integrates a first order sinc filter, however, an external anti-aliasing filter can provide an added filter for high noise applications. This can be done with a simple RC low-pass filter at the inputs as shown in Figure 6-7. Open-circuit detection resistors can also be added as shown in Figure 6-8.

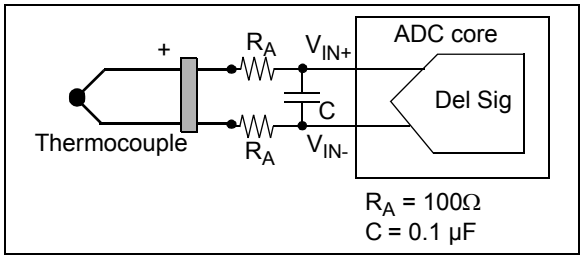

FIGURE 6-7: *Adding a Low-Pass Filter.*

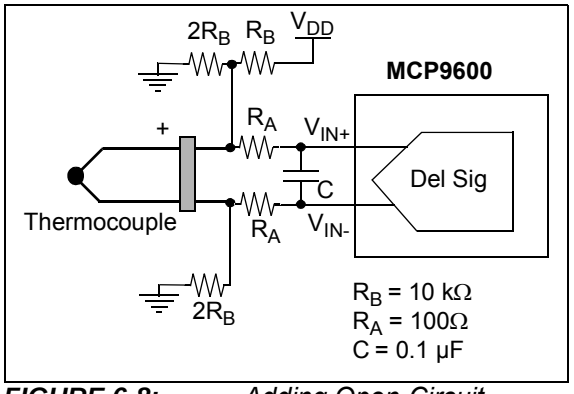

FIGURE 6-8: *Adding Open-Circuit Detection Resistors with an Input Low-Pass Filter.*

6.3.5 ESD PROTECTION USING FERRITE BEADS

Ferrite beads are highly recommended to protect the MCP9600 and other circuits from ESD discharge through the thermocouple wire. The beads suppress fast transient signals such as ESD and can be added in-line to the ADC inputs, as shown in Figure 6-9.

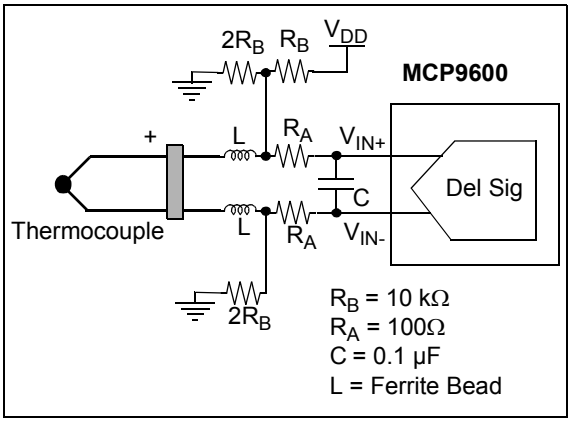

FIGURE 6-9: *Adding Ferrite Beads.*

© 2015-2016 Microchip Technology Inc.

7.0 PACKAGING INFORMATION

7.1 Package Marking Information

20-Lead MQFN (5x5x1.0 mm)

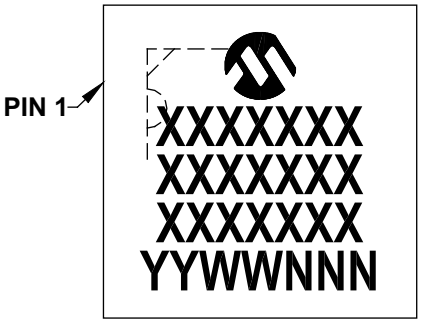

Example

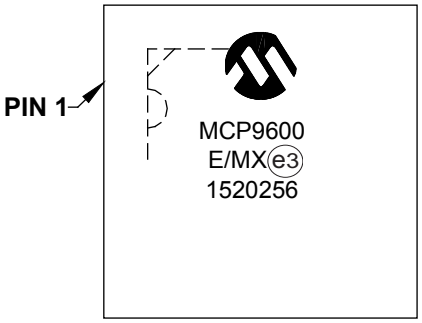

Legend:	XX...X	Customer-specific information
	Y	Year code (last digit of calendar year)
	YY	Year code (last 2 digits of calendar year)
	WW	Week code (week of January 1 is week ‘01’)
	NNN	Alphanumeric traceability code
	(e3)	Pb-free JEDEC® designator for Matte Tin (Sn)
	*	This package is Pb-free. The Pb-free JEDEC designator ((e3)) can be found on the outer packaging for this package.

Note: In the event the full Microchip part number cannot be marked on one line, it will be carried over to the next line, thus limiting the number of available characters for customer-specific information.

20-Lead More Thin Plastic Quad Flat, No Lead Package (NU) - 5x5x1.0 mm Body [MQFN] - (Also called VQFN)

Note: For the most current package drawings, please see the Microchip Packaging Specification located at http://www.microchip.com/packaging

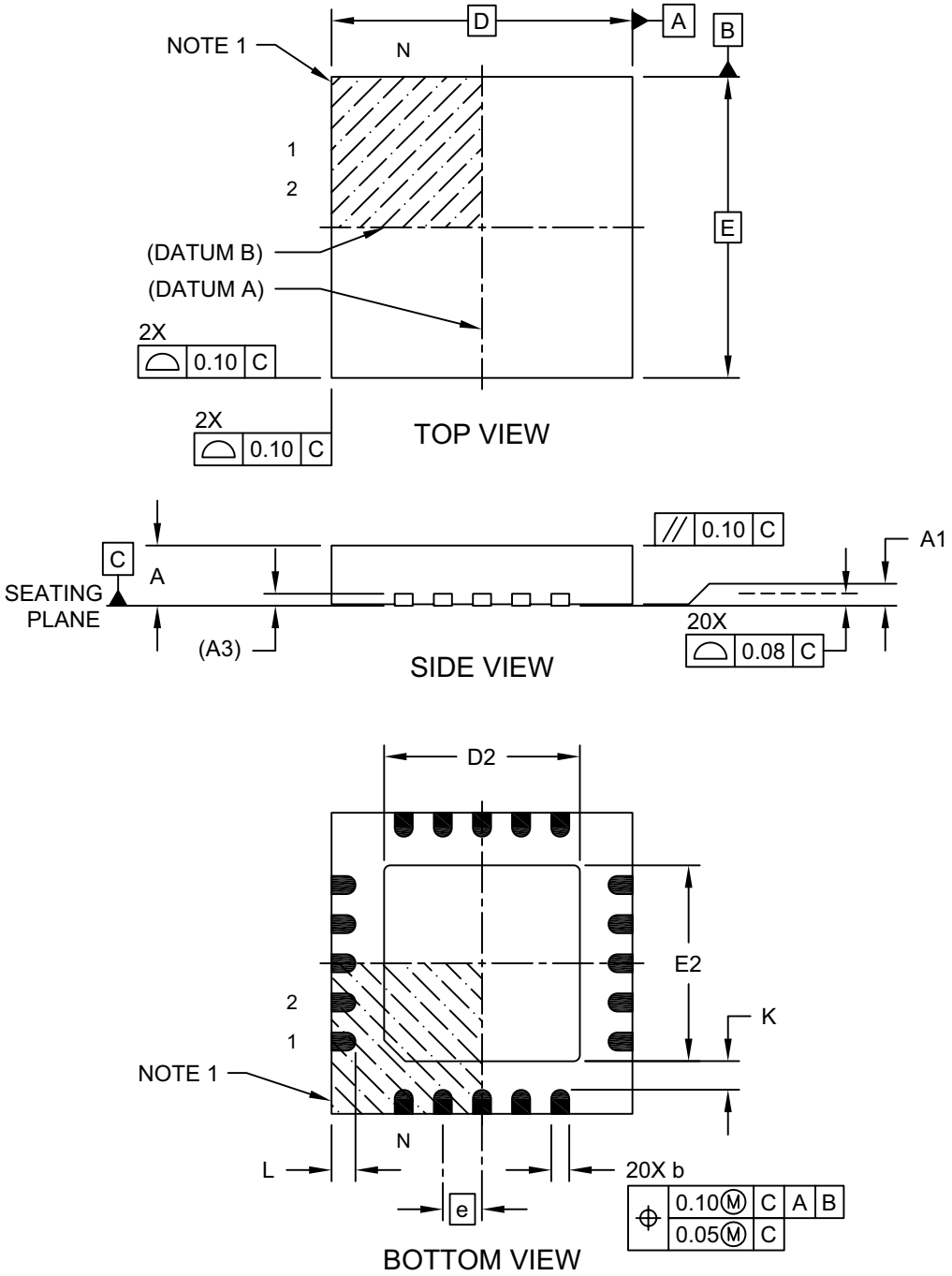

Microchip Technology Drawing C04-186A Sheet 1 of 2

© 2015-2016 Microchip Technology Inc.

20-Lead More Thin Plastic Quad Flat, No Lead Package (NU) - 5x5x1.0 mm Body [MQFN] - (Also called VQFN)

Note: For the most current package drawings, please see the Microchip Packaging Specification located at http://www.microchip.com/packaging

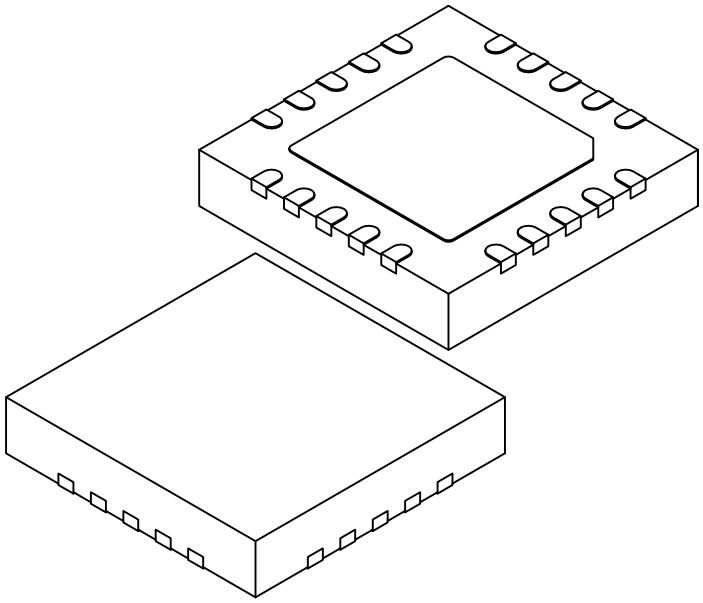

Units		MILLIMETERS		
Dimension Limits		MIN	NOM	MAX
Number of Pins	N		20	
Pitch	e		0.65 BSC	
Overall Height	A	0.90	0.95	1.00
Standoff	A1	0.00	0.02	0.05
Terminal Thickness	A3		0.20 REF	
Overall Length	D		5.00 BSC	
Exposed Pad Length	D2	3.15	3.25	3.35
Overall Width	E		5.00 BSC	
Exposed Pad Width	E2	3.15	3.25	3.35
Terminal Width	b	0.25	0.30	0.35
Terminal Length	L	0.35	0.40	0.45
Terminal-to-Exposed-Pad	K	0.20	-	-

Notes:

1. Pin 1 visual index feature may vary, but must be located within the hatched area.
2. Package is saw singulated
3. Dimensioning and tolerancing per ASME Y14.5M

   BSC: Basic Dimension. Theoretically exact value shown without tolerances.

   REF: Reference Dimension, usually without tolerance, for information purposes only.

Microchip Technology Drawing C04-186A Sheet 2 of 2

© 2015-2016 Microchip Technology Inc.

20-Lead More Thin Plastic Quad Flat, No Lead Package (NU) - 5x5x1.0 mm Body [MQFN] - (Also called VQFN)

Note: For the most current package drawings, please see the Microchip Packaging Specification located at http://www.microchip.com/packaging

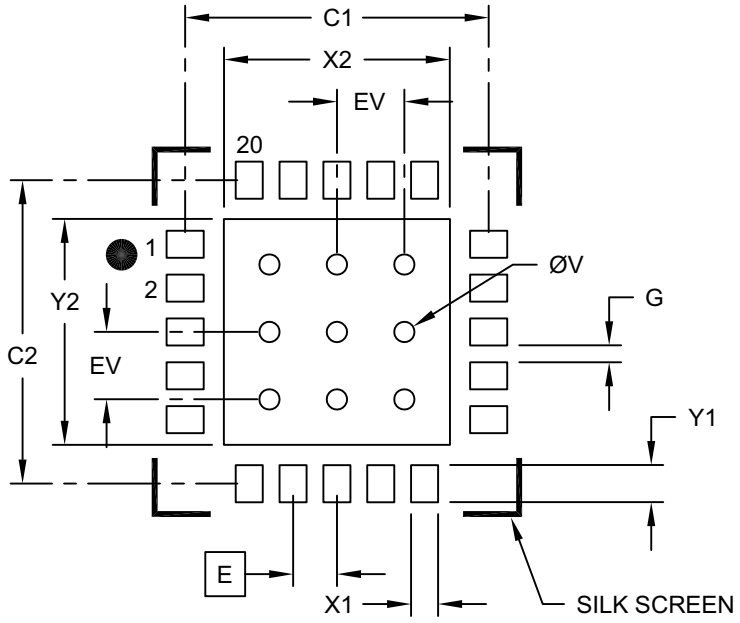

RECOMMENDED LAND PATTERN

Units		MILLIMETERS		
Dimension Limits		MIN	NOM	MAX
Contact Pitch	E	0.65 BSC		
Optional Center Pad Width	W2			3.35
Optional Center Pad Length	T2			3.35
Contact Pad Spacing	C1		4.50	
Contact Pad Spacing	C2		4.50	
Contact Pad Width (X20)	X1			0.40
Contact Pad Length (X20)	Y1			0.55
Distance Between Pads	G	0.20		
Thermal Via Diameter	V		0.30	
Thermal Via Pitch	EV		1.00	

Notes:

1. Dimensioning and tolerancing per ASME Y14.5M

   BSC: Basic Dimension. Theoretically exact value shown without tolerances.

2. For best soldering results, thermal vias, if used, should be filled or tented to avoid solder loss during reflow process

Microchip Technology Drawing C04-286B

© 2015-2016 Microchip Technology Inc.

APPENDIX A: REVISION HISTORY

Revision B (June 2016)

The following is the list of modifications:

1. Corrected the pin description error for pins 19 and 20 on page 1.
2. Added the MCP9600 Evaluation Board picture on page 2.
3. Added **Section 6.3.3.1 "Open-Circuit Detection Technique"** and updated **Section 6.3.4 "Aliasing and Anti-Aliasing Filter"** and **Section 6.3.5 "ESD Protection using Ferrite Beads"**.
4. Updated the Product Identification System section.

Revision A (August 2015)

- Original release of this document.

NOTES:

© 2015-2016 Microchip Technology Inc.

PRODUCT IDENTIFICATION SYSTEM

To order or obtain information, e.g., on pricing or delivery, refer to the factory or the listed sales office.

PART NO.[1]	[X][2]	X	/XX
Device	Tape and Reel Option	Temperature Range	Package

Device:	MCP9600:	Signal Conditioning IC[1]
	MCP9600T:	Signal Conditioning IC[1] (Tape and Reel)
Tape and Reel Option:	T =	Tape and Reel[2]
Temperature Range:	E =	-40°C to +125°C
Package:	MX =	More Thin Plastic Quad Flat, MQFN, 20-lead

Examples:

a) MCP9600-E/MX: Extended temperature, 20LD MQFN package

b) MCP9600T-E/MX: Tape and Reel, Extended temperature, 20LD MQFN package

Note 1: For custom Thermocouple Types or custom features, please contact your local Microchip sales office. Minimum purchase volumes are required.

2: Tape and Reel identifier only appears in the catalog part number description. This identifier is used for ordering purposes and is not printed on the device package. Check with your Microchip Sales Office for package availability with the Tape and Reel option.

NOTES:

© 2015-2016 Microchip Technology Inc.

Note the following details of the code protection feature on Microchip devices:

- Microchip products meet the specification contained in their particular Microchip Data Sheet.
- Microchip believes that its family of products is one of the most secure families of its kind on the market today, when used in the intended manner and under normal conditions.
- There are dishonest and possibly illegal methods used to breach the code protection feature. All of these methods, to our knowledge, require using the Microchip products in a manner outside the operating specifications contained in Microchip's Data Sheets. Most likely, the person doing so is engaged in theft of intellectual property.
- Microchip is willing to work with the customer who is concerned about the integrity of their code.
- Neither Microchip nor any other semiconductor manufacturer can guarantee the security of their code. Code protection does not mean that we are guaranteeing the product as "unbreakable."

Code protection is constantly evolving. We at Microchip are committed to continuously improving the code protection features of our products. Attempts to break Microchip's code protection feature may be a violation of the Digital Millennium Copyright Act. If such acts allow unauthorized access to your software or other copyrighted work, you may have a right to sue for relief under that Act.

Information contained in this publication regarding device applications and the like is provided only for your convenience and may be superseded by updates. It is your responsibility to ensure that your application meets with your specifications. MICROCHIP MAKES NO REPRESENTATIONS OR WARRANTIES OF ANY KIND WHETHER EXPRESS OR IMPLIED, WRITTEN OR ORAL, STATUTORY OR OTHERWISE, RELATED TO THE INFORMATION, INCLUDING BUT NOT LIMITED TO ITS CONDITION, QUALITY, PERFORMANCE, MERCHANTABILITY OR FITNESS FOR PURPOSE**.** Microchip disclaims all liability arising from this information and its use. Use of Microchip devices in life support and/or safety applications is entirely at the buyer's risk, and the buyer agrees to defend, indemnify and hold harmless Microchip from any and all damages, claims, suits, or expenses resulting from such use. No licenses are conveyed, implicitly or otherwise, under any Microchip intellectual property rights unless otherwise stated.

Trademarks

The Microchip name and logo, the Microchip logo, dsPIC, FlashFlex, flexPWR, JukeBlox, KEELOQ, KEELOQ logo, Kleer, LANCheck, MediaLB, MOST, MOST logo, MPLAB, OptoLyzer, PIC, PICSTART, PIC^{32} logo, RightTouch, SpyNIC, SST, SST Logo, SuperFlash and UNI/O are registered trademarks of Microchip Technology Incorporated in the U.S.A. and other countries.

The Embedded Control Solutions Company and mTouch are registered trademarks of Microchip Technology Incorporated in the U.S.A.

Analog-for-the-Digital Age, BodyCom, chipKIT, chipKIT logo, CodeGuard, dsPICDEM, dsPICDEM.net, ECAN, In-Circuit Serial Programming, ICSP, Inter-Chip Connectivity, KleerNet, KleerNet logo, MiWi, motorBench, MPASM, MPF, MPLAB Certified logo, MPLIB, MPLINK, MultiTRAK, NetDetach, Omniscient Code Generation, PICDEM, PICDEM.net, PICkit, PICtail, RightTouch logo, REAL ICE, SQI, Serial Quad I/O, Total Endurance, TSHARC, USBCheck, VariSense, ViewSpan, WiperLock, Wireless DNA, and ZENA are trademarks of Microchip Technology Incorporated in the U.S.A. and other countries.

SQTP is a service mark of Microchip Technology Incorporated in the U.S.A.

Silicon Storage Technology is a registered trademark of Microchip Technology Inc. in other countries.

GestIC is a registered trademark of Microchip Technology Germany II GmbH & Co. KG, a subsidiary of Microchip Technology Inc., in other countries.

All other trademarks mentioned herein are property of their respective companies.

© 2015-2016, Microchip Technology Incorporated, Printed in the U.S.A., All Rights Reserved.

ISBN: 978-1-5224-0655-6

QUALITY MANAGEMENT SYSTEM
CERTIFIED BY DNV
== ISO/TS 16949 ==

Microchip received ISO/TS-16949:2009 certification for its worldwide headquarters, design and wafer fabrication facilities in Chandler and Tempe, Arizona; Gresham, Oregon and design centers in California and India. The Company's quality system processes and procedures are for its PIC® MCUs and dsPIC® DSCs, KEELOQ® code hopping devices, Serial EEPROMs, microperipherals, nonvolatile memory and analog products. In addition, Microchip's quality system for the design and manufacture of development systems is ISO 9001:2000 certified.

Worldwide Sales and Service

AMERICAS

Corporate Office
2355 West Chandler Blvd.
Chandler, AZ 85224-6199
Tel: 480-792-7200
Fax: 480-792-7277
Technical Support:
http://www.microchip.com/support
Web Address:
www.microchip.com

Atlanta
Duluth, GA
Tel: 678-957-9614
Fax: 678-957-1455

Austin, TX
Tel: 512-257-3370

Boston
Westborough, MA
Tel: 774-760-0087
Fax: 774-760-0088

Chicago
Itasca, IL
Tel: 630-285-0071
Fax: 630-285-0075

Cleveland
Independence, OH
Tel: 216-447-0464
Fax: 216-447-0643

Dallas
Addison, TX
Tel: 972-818-7423
Fax: 972-818-2924

Detroit
Novi, MI
Tel: 248-848-4000

Houston, TX
Tel: 281-894-5983

Indianapolis
Noblesville, IN
Tel: 317-773-8323
Fax: 317-773-5453

Los Angeles
Mission Viejo, CA
Tel: 949-462-9523
Fax: 949-462-9608

New York, NY
Tel: 631-435-6000

San Jose, CA
Tel: 408-735-9110

Canada - Toronto
Tel: 905-673-0699
Fax: 905-673-6509

ASIA/PACIFIC

Asia Pacific Office
Suites 3707-14, 37th Floor
Tower 6, The Gateway
Harbour City, Kowloon

Hong Kong
Tel: 852-2943-5100
Fax: 852-2401-3431

Australia - Sydney
Tel: 61-2-9868-6733
Fax: 61-2-9868-6755

China - Beijing
Tel: 86-10-8569-7000
Fax: 86-10-8528-2104

China - Chengdu
Tel: 86-28-8665-5511
Fax: 86-28-8665-7889

China - Chongqing
Tel: 86-23-8980-9588
Fax: 86-23-8980-9500

China - Dongguan
Tel: 86-769-8702-9880

China - Hangzhou
Tel: 86-571-8792-8115
Fax: 86-571-8792-8116

China - Hong Kong SAR
Tel: 852-2943-5100
Fax: 852-2401-3431

China - Nanjing
Tel: 86-25-8473-2460
Fax: 86-25-8473-2470

China - Qingdao
Tel: 86-532-8502-7355
Fax: 86-532-8502-7205

China - Shanghai
Tel: 86-21-5407-5533
Fax: 86-21-5407-5066

China - Shenyang
Tel: 86-24-2334-2829
Fax: 86-24-2334-2393

China - Shenzhen
Tel: 86-755-8864-2200
Fax: 86-755-8203-1760

China - Wuhan
Tel: 86-27-5980-5300
Fax: 86-27-5980-5118

China - Xian
Tel: 86-29-8833-7252
Fax: 86-29-8833-7256

ASIA/PACIFIC

China - Xiamen
Tel: 86-592-2388138
Fax: 86-592-2388130

China - Zhuhai
Tel: 86-756-3210040
Fax: 86-756-3210049

India - Bangalore
Tel: 91-80-3090-4444
Fax: 91-80-3090-4123

India - New Delhi
Tel: 91-11-4160-8631
Fax: 91-11-4160-8632

India - Pune
Tel: 91-20-3019-1500

Japan - Osaka
Tel: 81-6-6152-7160
Fax: 81-6-6152-9310

Japan - Tokyo
Tel: 81-3-6880- 3770
Fax: 81-3-6880-3771

Korea - Daegu
Tel: 82-53-744-4301
Fax: 82-53-744-4302

Korea - Seoul
Tel: 82-2-554-7200
Fax: 82-2-558-5932 or
82-2-558-5934

Malaysia - Kuala Lumpur
Tel: 60-3-6201-9857
Fax: 60-3-6201-9859

Malaysia - Penang
Tel: 60-4-227-8870
Fax: 60-4-227-4068

Philippines - Manila
Tel: 63-2-634-9065
Fax: 63-2-634-9069

Singapore
Tel: 65-6334-8870
Fax: 65-6334-8850

Taiwan - Hsin Chu
Tel: 886-3-5778-366
Fax: 886-3-5770-955

Taiwan - Kaohsiung
Tel: 886-7-213-7828

Taiwan - Taipei
Tel: 886-2-2508-8600
Fax: 886-2-2508-0102

Thailand - Bangkok
Tel: 66-2-694-1351
Fax: 66-2-694-1350

EUROPE

Austria - Wels
Tel: 43-7242-2244-39
Fax: 43-7242-2244-393

Denmark - Copenhagen
Tel: 45-4450-2828
Fax: 45-4485-2829

France - Paris
Tel: 33-1-69-53-63-20
Fax: 33-1-69-30-90-79

Germany - Dusseldorf
Tel: 49-2129-3766400

Germany - Karlsruhe
Tel: 49-721-625370

Germany - Munich
Tel: 49-89-627-144-0
Fax: 49-89-627-144-44

Italy - Milan
Tel: 39-0331-742611
Fax: 39-0331-466781

Italy - Venice
Tel: 39-049-7625286

Netherlands - Drunen
Tel: 31-416-690399
Fax: 31-416-690340

Poland - Warsaw
Tel: 48-22-3325737

Spain - Madrid
Tel: 34-91-708-08-90
Fax: 34-91-708-08-91

Sweden - Stockholm
Tel: 46-8-5090-4654

UK - Wokingham
Tel: 44-118-921-5800
Fax: 44-118-921-5820

07/14/15

© 2015-2016 Microchip Technology Inc.