MCP6V36/6U/7/9

23 µA, 300 kHz Zero-Drift Op Amps

Features

- High DC Precision:
  - V_{OS} Drift: ±150 nV/°C (maximum)
  - V_{OS}: ±25 µV (maximum)
  - A_{OL}: 110 dB (minimum, V_{DD} = 5.5V)
  - PSRR: 110 dB (minimum, V_{DD} = 5.5V)
  - CMRR: 110 dB (minimum, V_{DD} = 5.5V)
  - E_{ni}: 1.0 μV_{P-P} (typical), f = 0.1 Hz to 10 Hz
  - E_{ni}: 0.33 μV_{P-P} (typical), f = 0.01 Hz to 1 Hz
- Low Power and Supply Voltages:
  - I_Q: 23 µA/amplifier (typical)
  - Wide Supply Voltage Range: 1.8V to 5.5V
- Small Packages:
  - Singles in SC70, SOT-23
  - Duals in MSOP-8, 2×3 TDFN
  - Quads in TSSOP-14
- Easy to Use:
  - Rail-to-Rail Input/Output
  - Gain Bandwidth Product: 300 kHz (typical)
  - Unity Gain Stable
- Extended Temperature Range: -40°C to +125°C

Typical Applications

- Portable Instrumentation
- Sensor Conditioning
- Temperature Measurement
- DC Offset Correction
- Medical Instrumentation

Design Aids

- SPICE Macro Models
- Microchip Advanced Part Selector (MAPS)
- Analog Demonstration and Evaluation Boards
- Application Notes

Related Parts

- MCP6V01/2/3: Auto-Zeroed, Spread Clock
- MCP6V06/7/8: Auto-Zeroed
- MCP6V26/7/8: Auto-Zeroed, Low Noise
- MCP6V11/1U/2/4: Zero-Drift, Low Power
- MCP6V31/1U/2/4: Zero-Drift, Low Power

Description

The Microchip Technology Inc. MCP6V36/6U/7/9 family of operational amplifiers provides input offset voltage correction for very low offset and offset drift. These are low-power devices, with a gain bandwidth product of 300 kHz (typical). They are unity gain stable, have virtually no 1/f noise, and have good Power Supply Rejection Ratio (PSRR) and Common Mode Rejection Ratio (CMRR). These products operate with a single supply voltage as low as 1.8V, while drawing 23 µA/amplifier (typical) of quiescent current.

The Microchip Technology Inc. MCP6V36/6U/7/9 op amps are offered in single (MCP6V36 and MCP6V36U), dual (MCP6V37) and quad (MCP6V39) packages. They were designed using an advanced CMOS process.

Package Types

MCP6V36
SOT-23

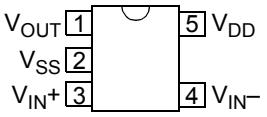

MCP6V37
MSOP

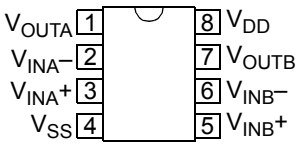

MCP6V36U
SC70, SOT-23

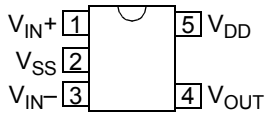

MCP6V37
2×3 TDFN *

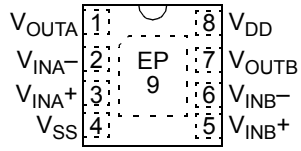

MCP6V39
TSSOP

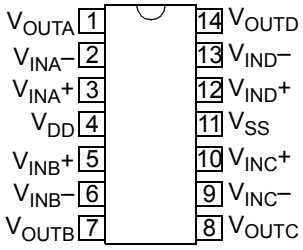

* Includes Exposed Thermal Pad (EP); see Table 3-1.

© 2019 Microchip Technology Inc.

Typical Application Circuit

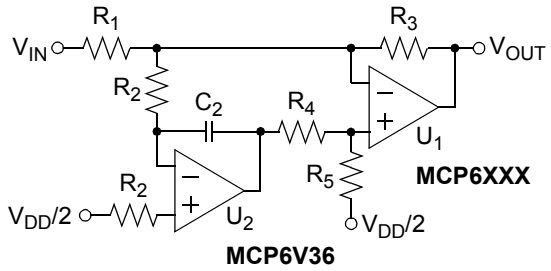

Offset Voltage Correction for Power Driver

© 2019 Microchip Technology Inc.

1.0 ELECTRICAL CHARACTERISTICS

1.1 Absolute Maximum Ratings †

$V_{DD} - V_{SS}$ 6.5V
Current at Input Pins ..... ±2 mA
Analog Inputs (V_{IN}+ and V_{IN}–) **(Note 1)** ..... V_{SS} – 1.0V to V_{DD}+1.0V
All other Inputs and Outputs ..... V_{SS} – 0.3V to V_{DD}+0.3V
Difference Input voltage ..... $|V_{DD} - V_{SS}|$
Output Short Circuit Current ..... Continuous
Current at Output and Supply Pins ..... ±30 mA
Storage Temperature ..... -65°C to +150°C
Maximum Junction Temperature ..... +150°C
ESD protection on all pins (HBM, CDM, MM) ..... ≥ 2 kV, 1.5 kV, 400V

Note 1: See **Section 4.2.1, Rail-to-Rail Inputs**.

† Notice: Stresses above those listed under “Absolute Maximum Ratings” may cause permanent damage to the device. This is a stress rating only and functional operation of the device at those or any other conditions above those indicated in the operational listings of this specification is not implied. Exposure to maximum rating conditions for extended periods may affect device reliability.

1.2 Specifications

TABLE 1-1: DC ELECTRICAL SPECIFICATIONS

Electrical Characteristics: Unless otherwise indicated, T_A = +25°C, V_{DD} = +1.8V to +5.5V, V_{SS} = GND, V_{CM} = V_{DD}/3,V_{OUT} = V_{DD}/2, V_L = V_{DD}/2, R_L = 100 kΩ to V_L and C_L = 20 pF (refer to Figure 1-4 and Figure 1-5).

Parameters	Sym.	Min.	Typ.	Max.	Units	Conditions
Input Offset						
Input Offset Voltage	V_{OS}	-25	—	+25	µV	T_A = +25°C
Input Offset Voltage Drift with Temperature (Linear Temp. Co.)	TC_1	-150	—	+150	nV/°C	T_A = -40 to +125°C **(Note 1)**
Input Offset Voltage Quadratic Temp. Co.	TC_2	—	±0.08	—	nV/°C^2	T_A = -40 to +125°C
Power Supply Rejection Ratio	PSRR	110	135	—	dB	
Input Bias Current and Impedance						
Input Bias Current	I_B	—	+5	—	pA	
Input Bias Current across Temperature	I_B	—	+20	—	pA	T_A = +85°C
	I_B	0	+2.9	+5	nA	T_A = +125°C
Input Offset Current	I_{OS}	—	±130	—	pA	
Input Offset Current across Temperature	I_{OS}	—	±140	—	pA	T_A = +85°C
	I_{OS}	-1	±0.4	+1	nA	T_A = +125°C
Common-Mode Input Impedance	Z_{CM}	—	10^{13}||6	—	Ω||pF	
Differential Input Impedance	Z_{DIFF}	—	10^{13}||6	—	Ω||pF	

Note 1: For Design Guidance only; not tested.
2: Figure 2-15 shows how V_{CML} and V_{CMH} changed across temperature for the first production lot.

TABLE 1-1: DC ELECTRICAL SPECIFICATIONS (CONTINUED)

Electrical Characteristics: Unless otherwise indicated, T_A = +25°C, V_{DD} = +1.8V to +5.5V, V_{SS} = GND, $V_{CM} = V_{DD}/3, V_{OUT} = V_{DD}/2$, $V_L = V_{DD}/2$, R_L = 100 kΩ to V_L and C_L = 20 pF (refer to Figure 1-4 and Figure 1-5).

Parameters	Sym.	Min.	Typ.	Max.	Units	Conditions
Common-Mode						
Common-Mode Input Voltage Range Low	V_{CML}	—	—	V_{SS} – 0.15	V	**(Note 2)**
Common-Mode Input Voltage Range High	V_{CMH}	V_{DD} + 0.2	—	—	V	**(Note 2)**
Common-Mode Rejection Ratio	CMRR	100	125	—	dB	V_{DD} = 1.8V, V_{CM} = -0.15V to 2.0V **(Note 2)**
	CMRR	110	135	—	dB	V_{DD} = 5.5V, V_{CM} = -0.15V to 5.7V **(Note 2)**
Open-Loop Gain						
DC Open-Loop Gain (large signal)	A_{OL}	93	125	—	dB	V_{DD} = 1.8V, V_{OUT} = 0.3V to 1.6V
	A_{OL}	110	135	—	dB	V_{DD} = 5.5V, V_{OUT} = 0.3V to 5.3V
Output						
Minimum Output Voltage Swing	V_{OL}	V_{SS}	V_{SS} + 14	V_{SS} + 45	mV	R_L = 10 kΩ, G = +2, 0.5V input overdrive
	V_{OL}	—	V_{SS} + 1.4	—	mV	R_L = 100 kΩ, G = +2, 0.5V input overdrive
Maximum Output Voltage Swing	V_{OH}	V_{DD} – 45	V_{DD} – 14	V_{DD}	mV	R_L = 10 kΩ, G = +2, 0.5V input overdrive
	V_{OH}	—	V_{DD} – 1.4	—	mV	R_L = 100 kΩ, G = +2, 0.5V input overdrive
Output Short Circuit Current	I_{SC}	—	±6	—	mA	V_{DD} = 1.8V
	I_{SC}	—	±21	—	mA	V_{DD} = 5.5V
Power Supply						
Supply Voltage	V_{DD}	1.8	—	5.5	V	
Quiescent Current per amplifier	I_Q	12	23	34	µA	I_O = 0, **MCP6V36/6U**
		10	21	34		I_O = 0, **MCP6V37/9**
POR Trip Voltage	V_{POR}	0.9	—	1.6	V	

Note 1: For Design Guidance only; not tested.

2: Figure 2-15 shows how V_{CML} and V_{CMH} changed across temperature for the first production lot.

© 2019 Microchip Technology Inc.

TABLE 1-2: AC ELECTRICAL SPECIFICATIONS

Electrical Characteristics: Unless otherwise indicated, T_A = +25°C, V_{DD} = +1.8V to +5.5V, V_{SS} = GND, V_{CM} = V_{DD}/3, V_{OUT} = V_{DD}/2, V_L = V_{DD}/2, R_L = 100 kΩ to V_L and C_L = 20 pF (refer to Figure 1-4 and Figure 1-5).						
Parameters	**Sym.**	**Min.**	**Typ.**	**Max.**	**Units**	**Conditions**
Amplifier AC Response						
Gain Bandwidth Product	GBWP	—	300	—	kHz	
Slew Rate	SR	—	0.13	—	V/µs	
Phase Margin	PM	—	70	—	°	G = +1
Amplifier Noise Response						
Input Noise Voltage	E_{ni}	—	0.33	—	μV_{P-P}	f = 0.01 Hz to 1 Hz
	E_{ni}	—	1.0	—	μV_{P-P}	f = 0.1 Hz to 10 Hz
Input Noise Voltage Density	e_{ni}	—	50	—	nV/√Hz	f < 2 kHz
Input Noise Current Density	i_{ni}	—	5	—	fA/√Hz	
Amplifier Distortion (Note 1)						
Intermodulation Distortion (AC)	IMD	—	52	—	μV_{PK}	V_{CM} tone = 50 mV_{PK} at 100 Hz, G_N = 1
Amplifier Step Response						
Start Up Time	t_{STR}	—	2	—	ms	G = +1, 0.1% V_{OUT} settling **(Note 2)**
Offset Correction Settling Time	t_{STL}	—	100	—	µs	G = +1, V_{IN} step of 2V, V_{OS} within 100 µV of its final value
Output Overdrive Recovery Time	t_{ODR}	—	120	—	µs	G = -10, ±0.5V input overdrive to V_{DD}/2, V_{IN} 50% point to V_{OUT} 90% point **(Note 3)**

Note 1: These parameters were characterized using the circuit in **Figure 1-6**. In **Figure 2-33** and **Figure 2-34**, there is an IMD tone at DC, a residual tone at 100 Hz and other IMD tones and clock tones.

2: High gains behave differently; see **Section 4.3.3, Offset at Power Up**.

3: t_{ODR} includes some uncertainty due to clock edge timing.

TABLE 1-3: TEMPERATURE SPECIFICATIONS

Electrical Characteristics: Unless otherwise indicated, all limits are specified for: V_{DD} = +1.8V to +5.5V, V_{SS} = GND.						
Parameters	**Sym.**	**Min.**	**Typ.**	**Max.**	**Units**	**Conditions**
Temperature Ranges						
Specified Temperature Range	T_A	-40	—	+125	°C	
Operating Temperature Range	T_A	-40	—	+125	°C	**(Note 1)**
Storage Temperature Range	T_A	-65	—	+150	°C	
Thermal Package Resistances						
Thermal Resistance, 5L-SC-70	θ_{JA}	—	209	—	°C/W	
Thermal Resistance, 5L-SOT-23	θ_{JA}	—	201	—	°C/W	
Thermal Resistance, 8L-2×3 TDFN	θ_{JA}	—	53	—	°C/W	
Thermal Resistance, 8L-MSOP	θ_{JA}	—	211	—	°C/W	
Thermal Resistance, 14L-TSSOP	θ_{JA}	—	100	—	°C/W	

Note 1: Operation must not cause T_J to exceed Maximum Junction Temperature specification (+150°C).

© 2019 Microchip Technology Inc.

1.3 Timing Diagrams

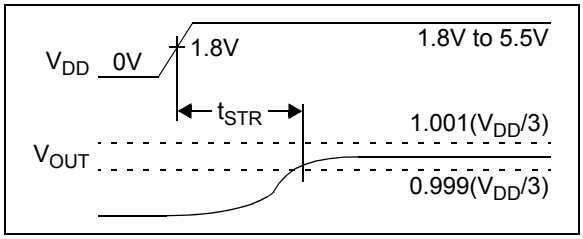

FIGURE 1-1: *Amplifier Start Up.*

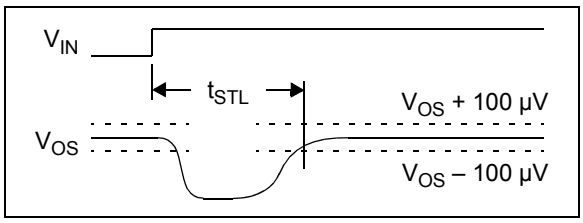

FIGURE 1-2: *Offset Correction Settling Time.*

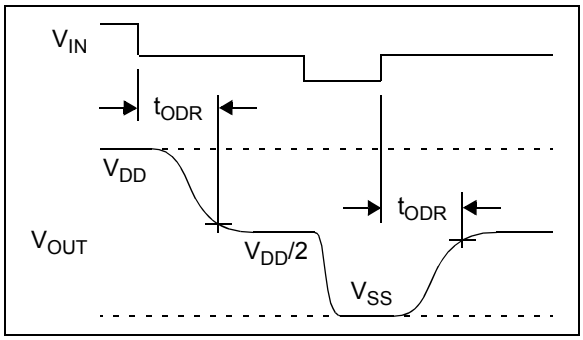

FIGURE 1-3: *Output Overdrive Recovery.*

1.4 Test Circuits

The circuits used for most DC and AC tests are shown in Figure 1-4 and Figure 1-5. Lay the bypass capacitors out as discussed in **Section 4.3.10 "Supply Bypassing and Filtering"**. R_N is equal to the parallel combination of R_F and R_G to minimize bias current effects.

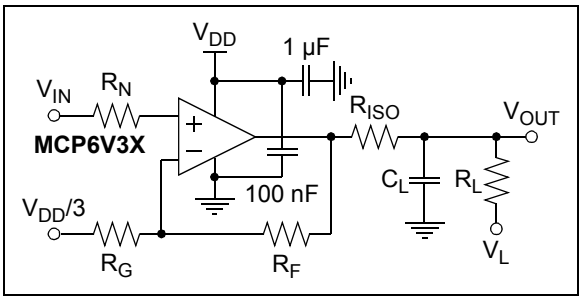

FIGURE 1-4: *AC and DC Test Circuit for Most Noninverting Gain Conditions.*

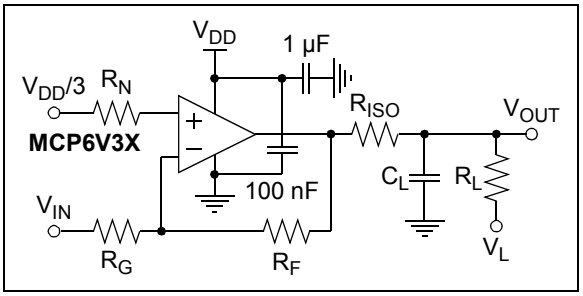

FIGURE 1-5: *AC and DC Test Circuit for Most Inverting Gain Conditions.*

The circuit in Figure 1-6 tests the input's dynamic behavior (i.e., IMD, t_{STR}, t_{STL} and t_{ODR}). The potentiometer balances the resistor network (V_{OUT} should equal V_{REF} at DC). The op amp's Common-mode input voltage is $V_{CM} = V_{IN}/2$. The error at the input (V_{ERR}) appears at V_{OUT} with a noise gain of 10 V/V.

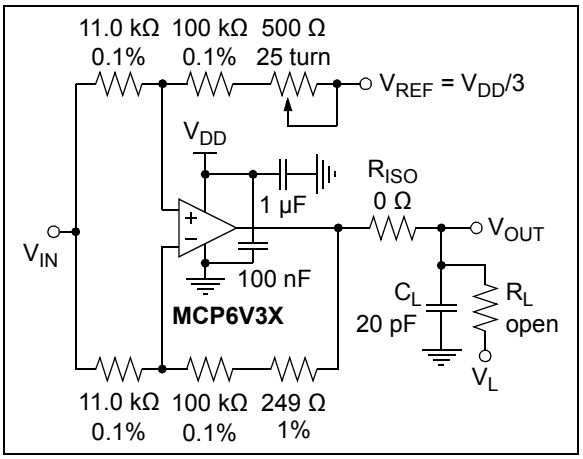

FIGURE 1-6: *Test Circuit for Dynamic Input Behavior.*

© 2019 Microchip Technology Inc.

2.0 TYPICAL PERFORMANCE CURVES

Note: The graphs and tables provided following this note are a statistical summary based on a limited number of samples and are provided for informational purposes only. The performance characteristics listed herein are not tested or guaranteed. In some graphs or tables, the data presented may be outside the specified operating range (e.g., outside specified power supply range) and therefore outside the warranted range.

Note: Unless otherwise indicated, T_A = +25°C, V_{DD} = +1.8V to 5.5V, V_{SS} = GND, V_{CM} = V_{DD}/3, V_{OUT} = V_{DD}/2, V_L = V_{DD}/2, R_L = 100 kΩ to V_L and C_L = 20 pF.

2.1 DC Input Precision

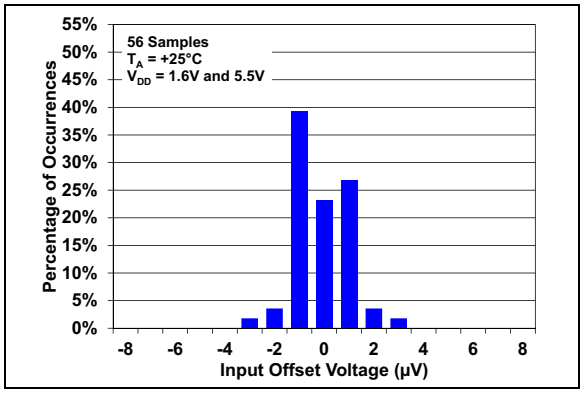

FIGURE 2-1: *Input Offset Voltage.*

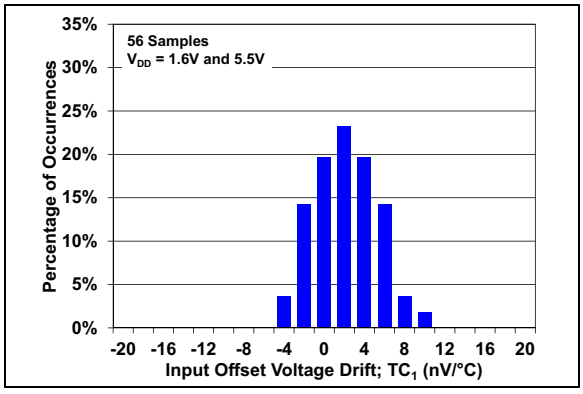

FIGURE 2-2: *Input Offset Voltage Drift.*

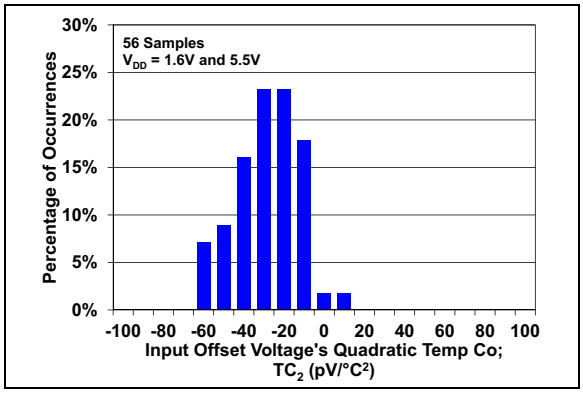

FIGURE 2-3: *Input Offset Voltage Quadratic Temp. Co.*

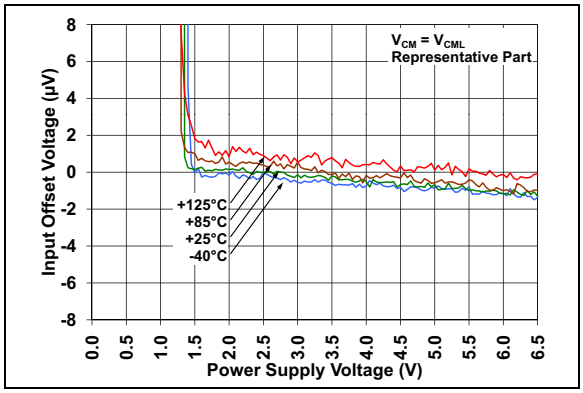

FIGURE 2-4: *Input Offset Voltage vs. Power Supply Voltage with V_{CM} = V_{CML}.*

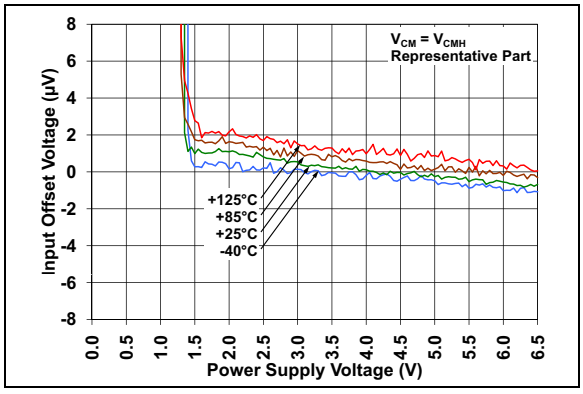

FIGURE 2-5: *Input Offset Voltage vs. Power Supply Voltage with V_{CM} = V_{CMH}.*

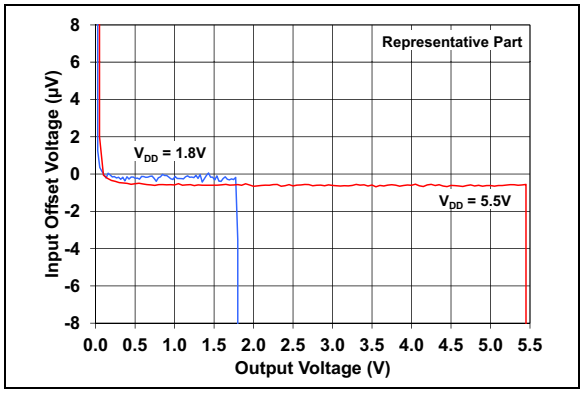

FIGURE 2-6: *Input Offset Voltage vs. Output Voltage.*

Note: Unless otherwise indicated, T_A = +25°C, V_{DD} = +1.8V to 5.5V, V_{SS} = GND, V_{CM} = V_{DD}/3, V_{OUT} = V_{DD}/2, V_L = V_{DD}/2, R_L = 100 kΩ to V_L and C_L = 20 pF.

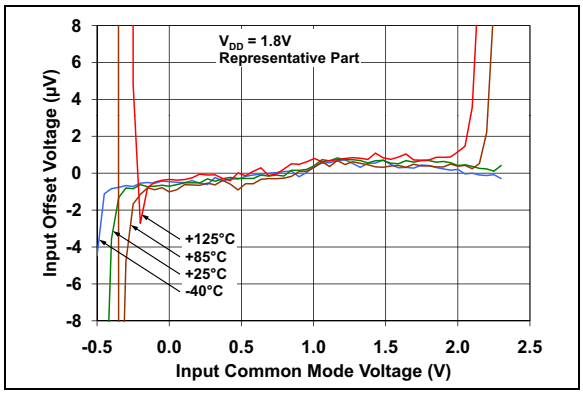

FIGURE 2-7: *Input Offset Voltage vs. Common-Mode Voltage with V_{DD} = 1.8V.*

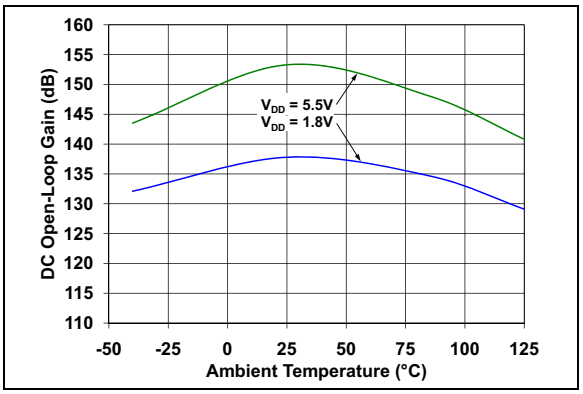

FIGURE 2-10: *DC Open-Loop Gain vs. Ambient Temperature.*

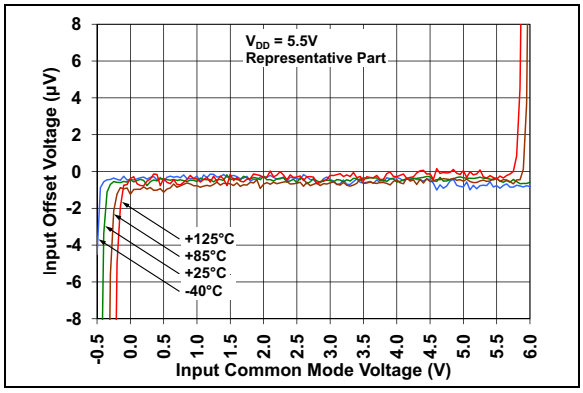

FIGURE 2-8: *Input Offset Voltage vs. Common-Mode Voltage with V_{DD} = 5.5V.*

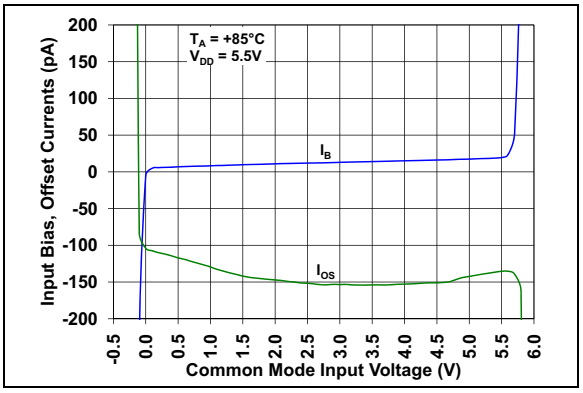

FIGURE 2-11: *Input Bias and Offset Currents vs. Common-Mode Input Voltage with T_A = +85°C.*

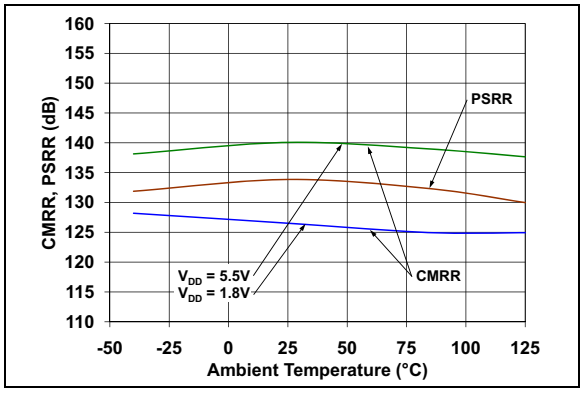

FIGURE 2-9: *CMRR and PSRR vs. Ambient Temperature.*

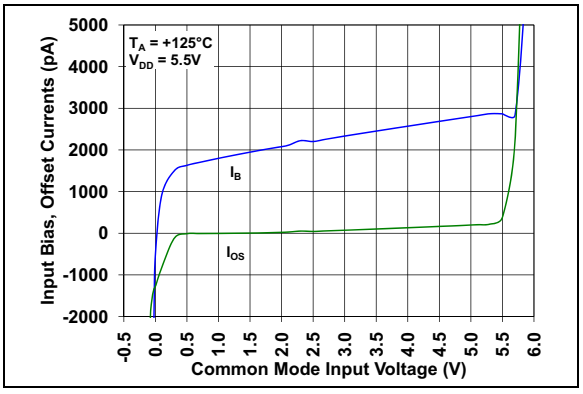

FIGURE 2-12: *Input Bias and Offset Currents vs. Common-Mode Input Voltage with T_A = +125°C.*

© 2019 Microchip Technology Inc.

Note: Unless otherwise indicated, T_A = +25°C, V_{DD} = +1.8V to 5.5V, V_{SS} = GND, V_{CM} = V_{DD}/3, V_{OUT} = V_{DD}/2, V_L = V_{DD}/2, R_L = 100 kΩ to V_L and C_L = 20 pF.

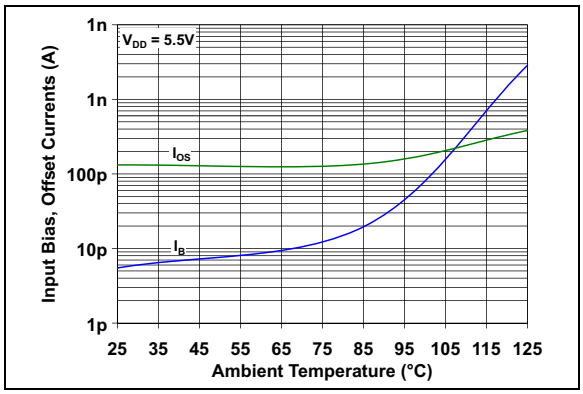

FIGURE 2-13: *Input Bias and Offset Currents vs. Ambient Temperature with V_{DD} = +5.5V.*

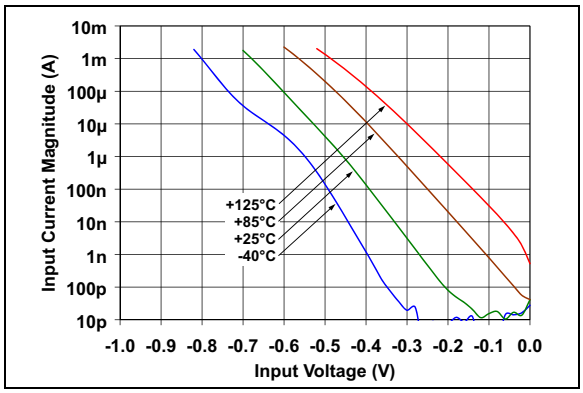

FIGURE 2-14: *Input Bias Current vs. Input Voltage (below V_{SS}).*

Note: Unless otherwise indicated, T_A = +25°C, V_{DD} = +1.8V to 5.5V, V_{SS} = GND, V_{CM} = V_{DD}/3, V_{OUT} = V_{DD}/2, V_L = V_{DD}/2, R_L = 100 kΩ to V_L and C_L = 20 pF.

2.2 Other DC Voltages and Currents

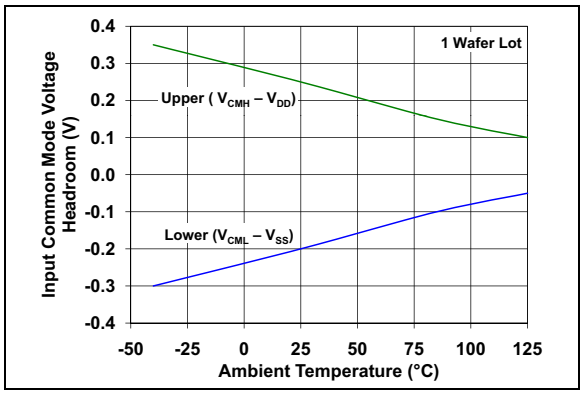

FIGURE 2-15: *Input Common-Mode Voltage Headroom (Range) vs. Ambient Temperature.*

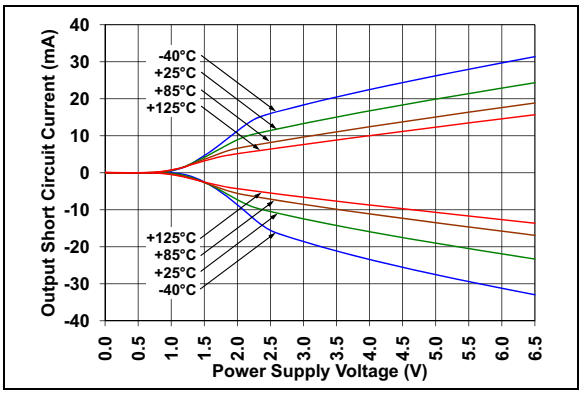

FIGURE 2-18: *Output Short Circuit Current vs. Power Supply Voltage.*

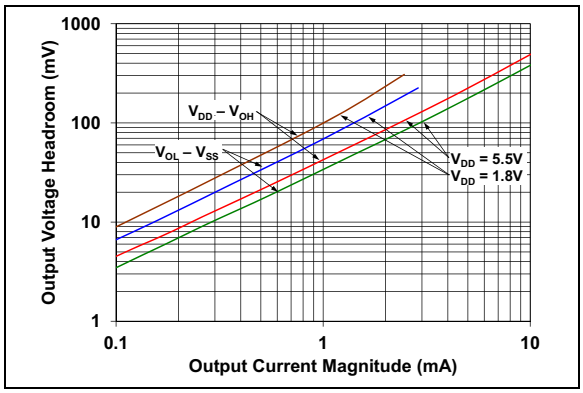

FIGURE 2-16: *Output Voltage Headroom vs. Output Current.*

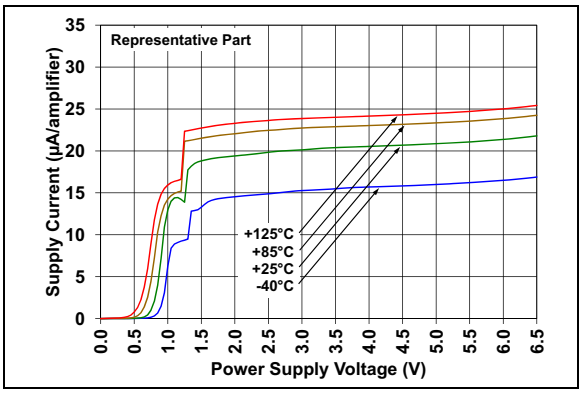

FIGURE 2-19: *Supply Current vs. Power Supply Voltage.*

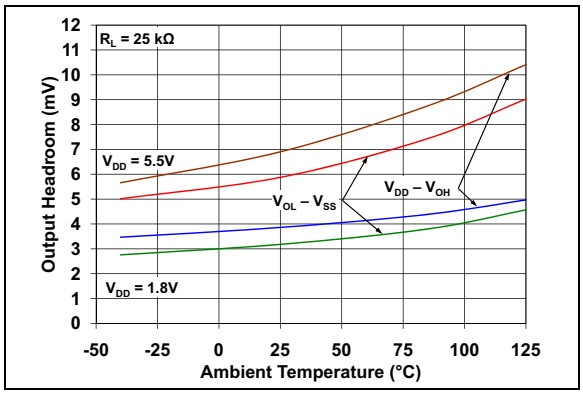

FIGURE 2-17: *Output Voltage Headroom vs. Ambient Temperature.*

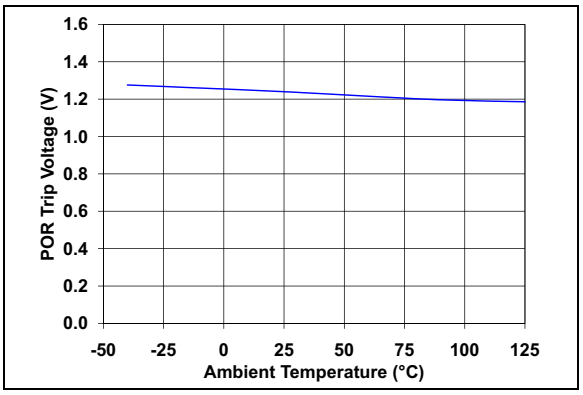

FIGURE 2-20: *Power-on Reset Voltage vs. Ambient Temperature.*

© 2019 Microchip Technology Inc.

Note: Unless otherwise indicated, T_A = +25°C, V_{DD} = +1.8V to 5.5V, V_{SS} = GND, V_{CM} = V_{DD}/3, V_{OUT} = V_{DD}/2, V_L = V_{DD}/2, R_L = 100 kΩ to V_L and C_L = 20 pF.

2.3 Frequency Response

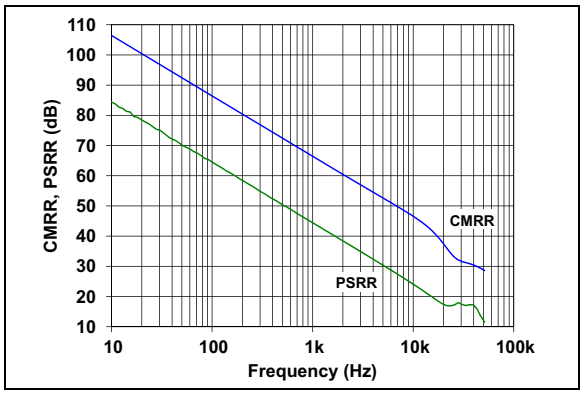

FIGURE 2-21: *CMRR and PSRR vs. Frequency.*

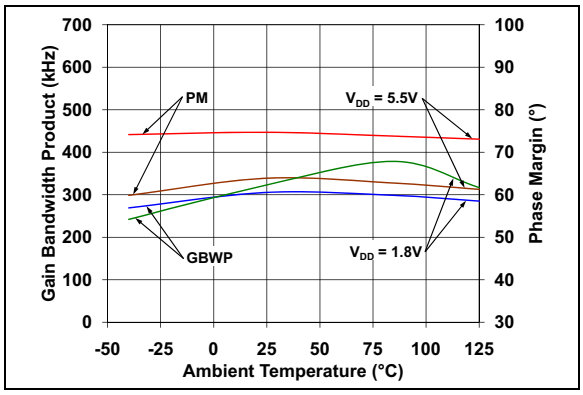

FIGURE 2-24: *Gain Bandwidth Product and Phase Margin vs. Ambient Temperature.*

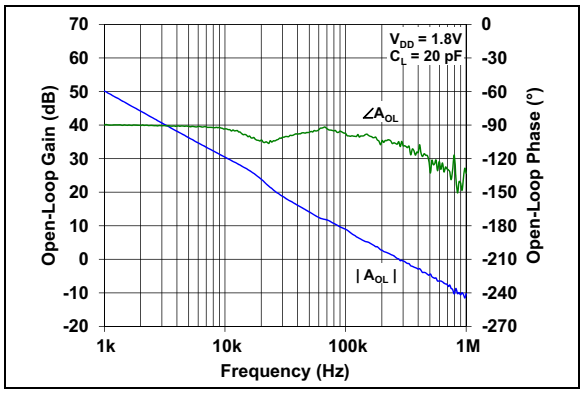

FIGURE 2-22: *Open-Loop Gain vs. Frequency with V_{DD} = 1.8V.*

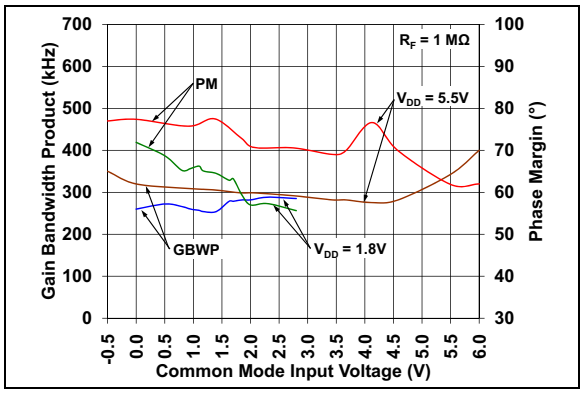

FIGURE 2-25: *Gain Bandwidth Product and Phase Margin vs. Common-Mode Input Voltage.*

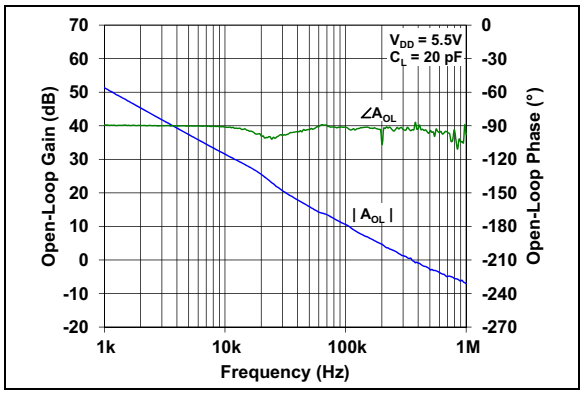

FIGURE 2-23: *Open-Loop Gain vs. Frequency with V_{DD} = 5.5V.*

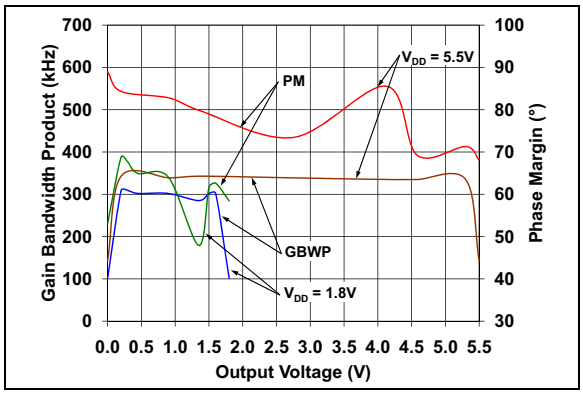

FIGURE 2-26: *Gain Bandwidth Product and Phase Margin vs. Output Voltage.*

Note: Unless otherwise indicated, T_A = +25°C, V_{DD} = +1.8V to 5.5V, V_{SS} = GND, V_{CM} = V_{DD}/3, V_{OUT} = V_{DD}/2, V_L = V_{DD}/2, R_L = 100 kΩ to V_L and C_L = 20 pF.

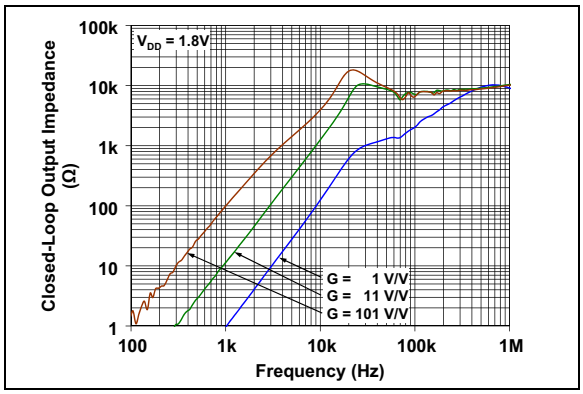

FIGURE 2-27: *Closed-Loop Output Impedance vs. Frequency with V_{DD} = 1.8V.*

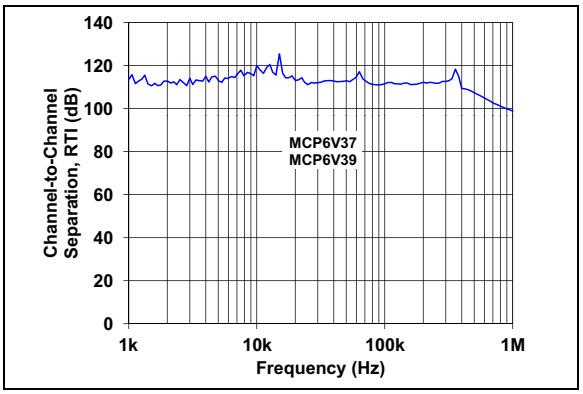

FIGURE 2-29: *Channel-to-Channel Separation vs. Frequency.*

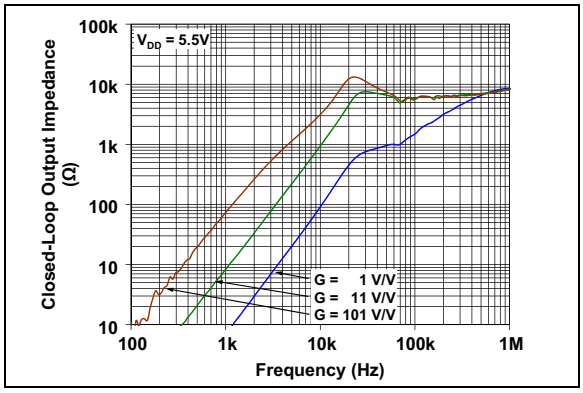

FIGURE 2-28: *Closed-Loop Output Impedance vs. Frequency with V_{DD} = 5.5V.*

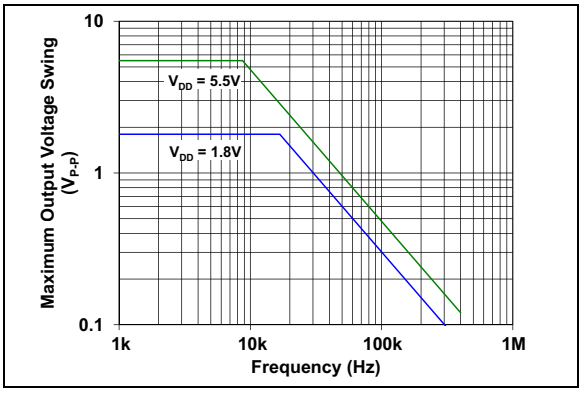

FIGURE 2-30: *Maximum Output Voltage Swing vs. Frequency.*

© 2019 Microchip Technology Inc.

Note: Unless otherwise indicated, T_A = +25°C, V_{DD} = +1.8V to 5.5V, V_{SS} = GND, V_{CM} = V_{DD}/3, V_{OUT} = V_{DD}/2, V_L = V_{DD}/2, R_L = 100 kΩ to V_L and C_L = 20 pF.

2.4 Input Noise and Distortion

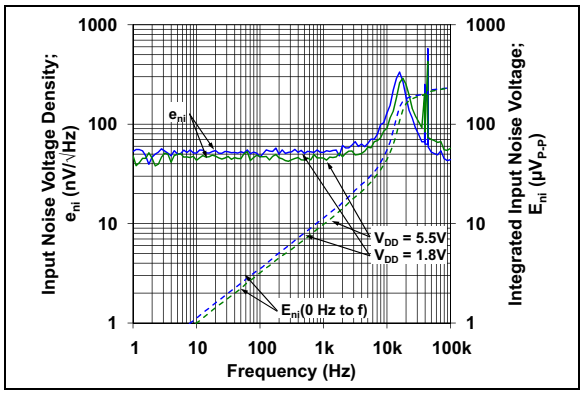

FIGURE 2-31: *Input Noise Voltage Density and Integrated Input Noise Voltage vs. Frequency.*

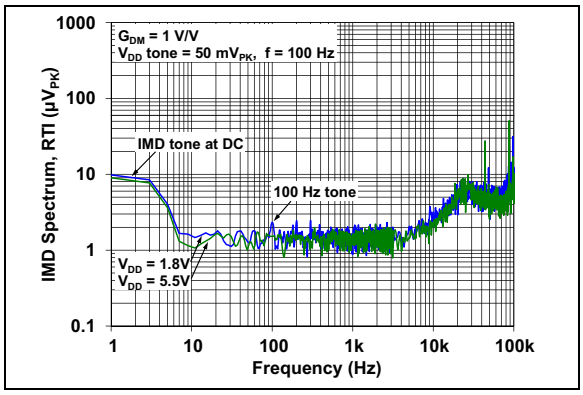

FIGURE 2-34: *Intermodulation Distortion vs. Frequency with V_{DD} Disturbance (see Figure 1-6).*

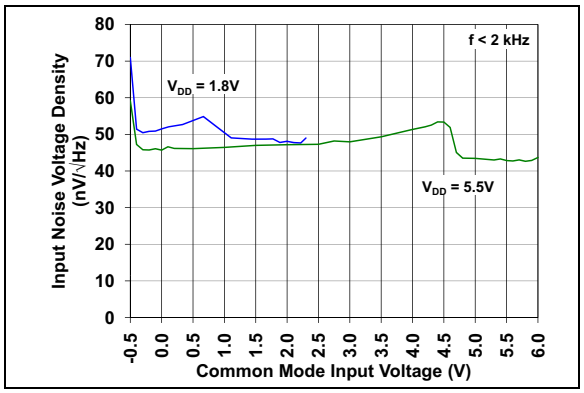

FIGURE 2-32: *Input Noise Voltage Density vs. Input Common-Mode Voltage.*

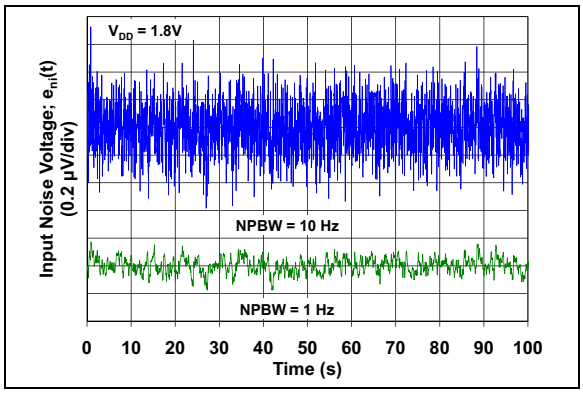

FIGURE 2-35: *Input Noise vs. Time with 1 Hz and 10 Hz Filters and V_{DD} = 1.8V.*

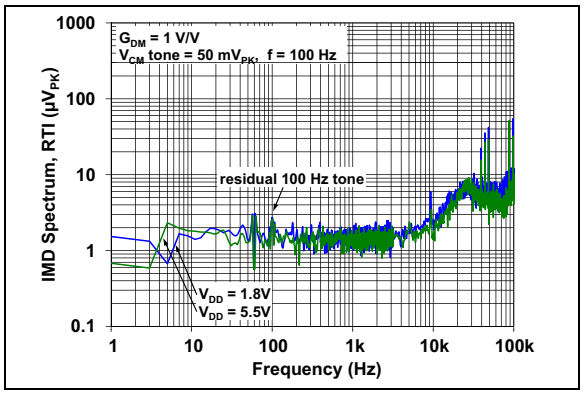

FIGURE 2-33: *Intermodulation Distortion vs. Frequency with V_{CM} Disturbance (see Figure 1-6).*

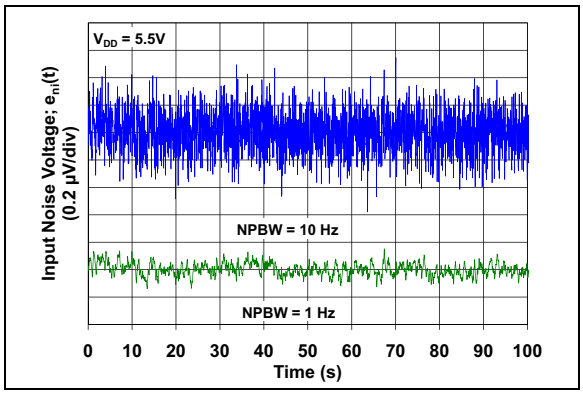

FIGURE 2-36: *Input Noise vs. Time with 1 Hz and 10 Hz Filters and V_{DD} = 5.5V.*

Note: Unless otherwise indicated, T_A = +25°C, V_{DD} = +1.8V to 5.5V, V_{SS} = GND, V_{CM} = V_{DD}/3, V_{OUT} = V_{DD}/2, V_L = V_{DD}/2, R_L = 100 kΩ to V_L and C_L = 20 pF.

2.5 Time Response

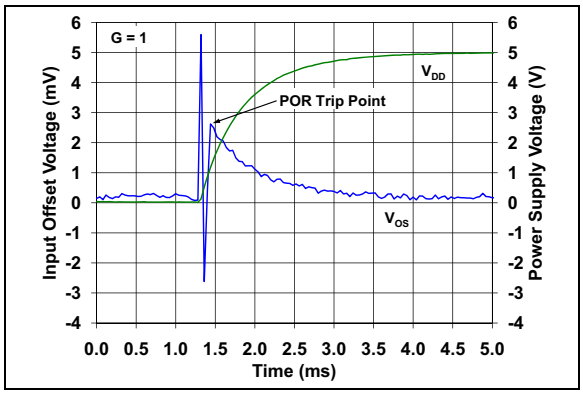

FIGURE 2-37: *Input Offset Voltage vs. Time at Power Up.*

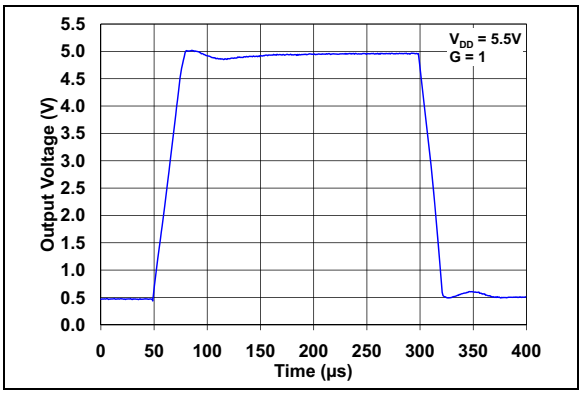

FIGURE 2-40: *Noninverting Large Signal Step Response.*

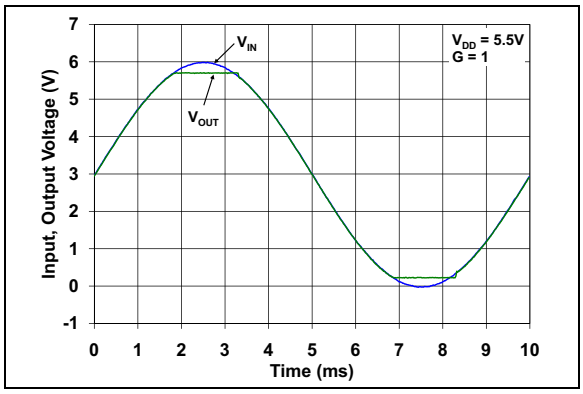

FIGURE 2-38: *The MCP6V36/6U/7/9 Family Shows No Input Phase Reversal with Overdrive.*

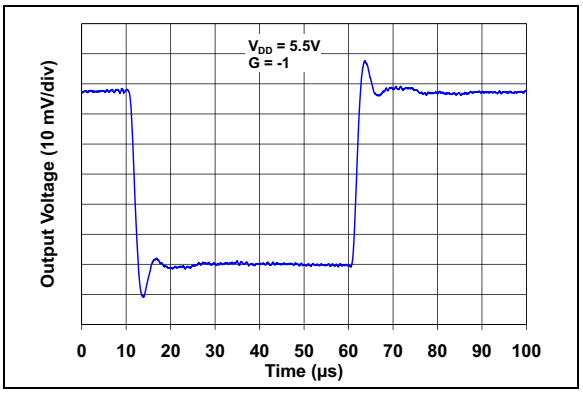

FIGURE 2-41: *Inverting Small Signal Step Response.*

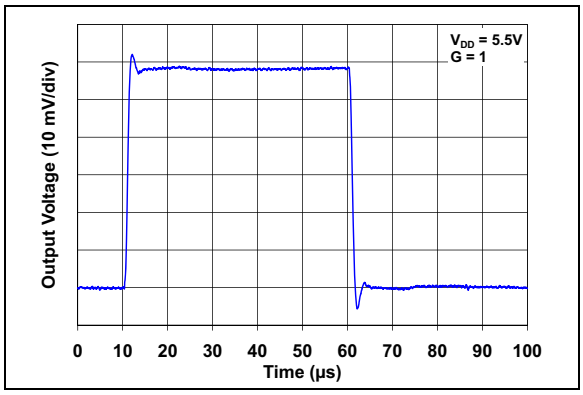

FIGURE 2-39: *Noninverting Small Signal Step Response.*

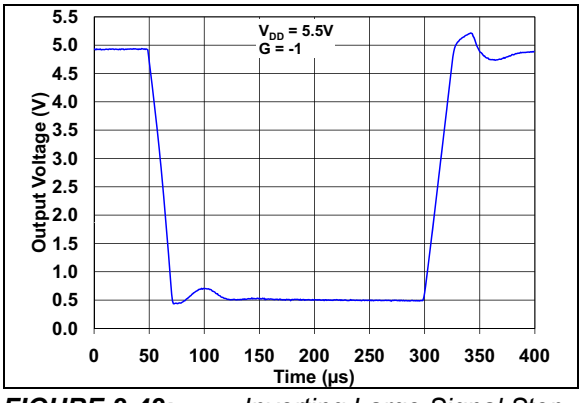

FIGURE 2-42: *Inverting Large Signal Step Response.*

© 2019 Microchip Technology Inc.

Note: Unless otherwise indicated, T_A = +25°C, V_{DD} = +1.8V to 5.5V, V_{SS} = GND, V_{CM} = V_{DD}/3, V_{OUT} = V_{DD}/2, V_L = V_{DD}/2, R_L = 100 kΩ to V_L and C_L = 20 pF.

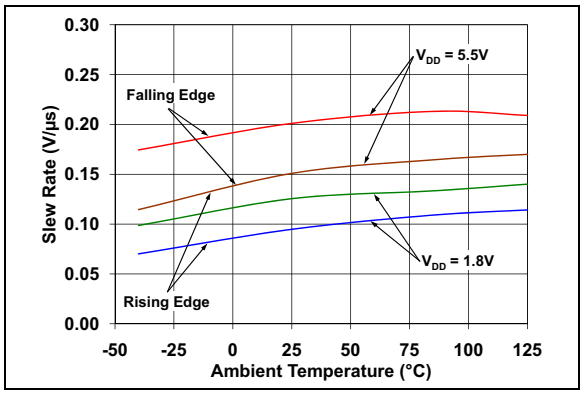

FIGURE 2-43: *Slew Rate vs. Ambient Temperature.*

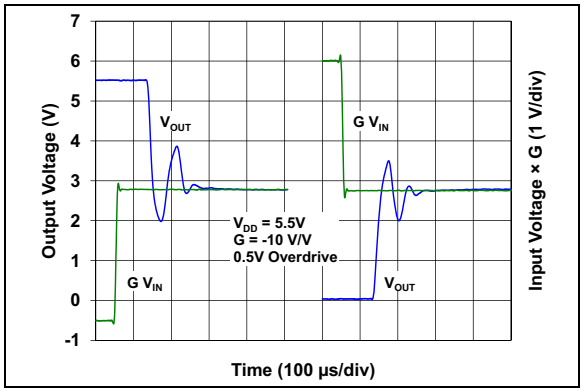

FIGURE 2-44: *Output Overdrive Recovery vs. Time with G = -10 V/V.*

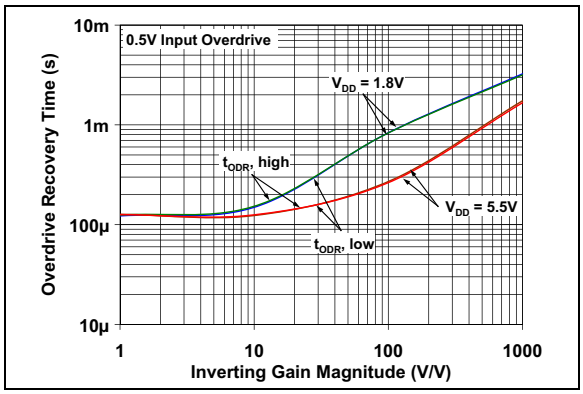

FIGURE 2-45: *Output Overdrive Recovery Time vs. Inverting Gain.*

3.0 PIN DESCRIPTIONS

Descriptions of the pins are listed in Table 3-1.

TABLE 3-1: PIN FUNCTION TABLE

MCP6V36	MCP6V36U	MCP6V37		MCP6V39	Symbol	Description
SOT-23	SOT-23, SC-70	2×3 TDFN	MSOP	TSSOP		
1	4	1	1	1	V_{OUT}, V_{OUTA}	Output (Op Amp A)
4	3	2	2	2	$V_{IN}–$, $V_{INA}–$	Inverting Input (Op Amp A)
3	1	3	3	3	$V_{IN}+$, $V_{INA}+$	Noninverting Input (Op Amp A)
5	5	8	8	4	V_{DD}	Positive Power Supply
—	—	5	5	5	$V_{INB}+$	Noninverting Input (Op Amp B)
—	—	6	6	6	$V_{INB}–$	Inverting Input (Op Amp B)
—	—	7	7	7	V_{OUTB}	Output (Op Amp B)
—	—	—	—	8	V_{OUTC}	Output (Op Amp C)
—	—	—	—	9	$V_{INC}–$	Inverting Input (Op Amp C)
—	—	—	—	10	$V_{INC}+$	Noninverting Input (Op Amp C)
2	2	4	4	11	V_{SS}	Negative Power Supply
—	—	—	—	12	$V_{IND}+$	Noninverting Input (Op Amp D)
—	—	—	—	13	$V_{IND}–$	Inverting Input (Op Amp D)
—	—	—	—	14	V_{OUTD}	Output (Op Amp D)
—	—	9	—	—	EP	Exposed Thermal Pad (EP); must be connected to V_{SS}

3.1 Analog Outputs

The analog output pins (V_{OUT}) are low-impedance voltage sources.

3.2 Analog Inputs

The noninverting and inverting inputs ($V_{IN}+$, $V_{IN}–$, …) are high-impedance CMOS inputs with low bias currents.

3.3 Power Supply Pins

The positive power supply (V_{DD}) is 1.8V to 5.5V higher than the negative power supply (V_{SS}). For normal operation, the other pins are between V_{SS} and V_{DD}.

Typically, these parts are used in a single (positive) supply configuration. In this case, V_{SS} is connected to ground and V_{DD} is connected to the supply. V_{DD} will need bypass capacitors.

3.4 Exposed Thermal Pad (EP)

There is an internal connection between the exposed thermal pad (EP) and the V_{SS} pin; they must be connected to the same potential on the printed circuit board (PCB).

This pad can be connected to a PCB ground plane to provide a larger heat sink. This improves the package thermal resistance (θ_{JA}).

© 2019 Microchip Technology Inc.

NOTES:

4.0 APPLICATIONS

The MCP6V36/6U/7/9 family of zero-drift op amps is manufactured using Microchip's state of the art CMOS process. It is designed for applications with requirements for small packages and low power. Its low supply voltage and low quiescent current make the MCP6V36/6U/7/9 devices ideal for battery-powered applications.

4.1 Overview of Zero-Drift Operation

Figure 4-1 shows a simplified diagram of the MCP6V36/6U/7/9 zero-drift op amps. This diagram will be used to explain how slow voltage errors are reduced in this architecture (much better V_{OS}, $\Delta V_{OS}/\Delta T_A$ (TC_1), CMRR, PSRR, A_{OL} and 1/f noise).

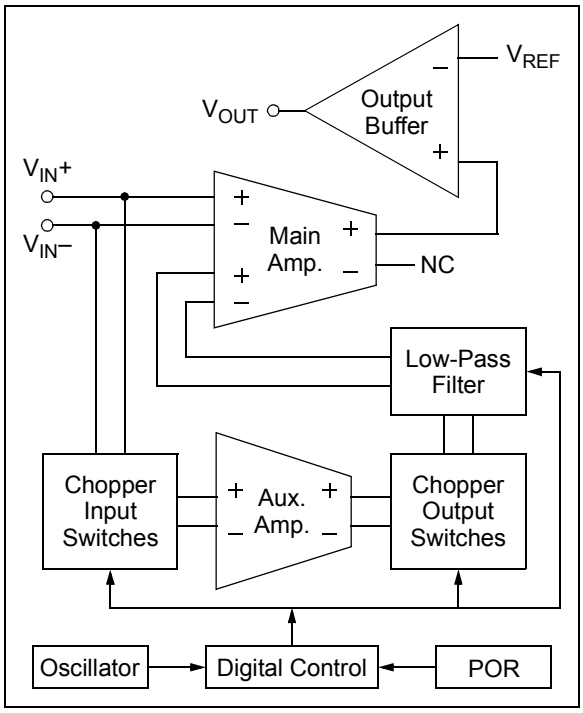

FIGURE 4-1: *Simplified Zero-Drift Op Amp Functional Diagram.*

4.1.1 BUILDING BLOCKS

The Main Amplifier is designed for high gain and bandwidth, with a differential topology. Its main input pair (+ and - pins at the top left) is used for the higher frequency portion of the input signal. Its auxiliary input pair (+ and - pins at the bottom left) is used for the low-frequency portion of the input signal and corrects the op amp's input offset voltage. Both inputs are added together internally.

The Auxiliary Amplifier, Chopper Input Switches and Chopper Output Switches provide a high DC gain to the input signal. DC errors are modulated to higher frequencies, while white noise is modulated to low frequency.

The Low-Pass Filter reduces high-frequency content, including harmonics of the Chopping Clock.

The Output Buffer drives external loads at the V_{OUT} pin (V_{REF} is an internal reference voltage).

The Oscillator runs at f_{OSC1} = 200 kHz. Its output is divided by two, to produce the Chopping Clock rate of f_{CHOP} = 100 kHz.

The internal POR part starts the part in a known good state, protecting against power supply brown-outs.

The Digital Control block controls switching and POR events.

4.1.2 CHOPPING ACTION

Figure 4-2 shows the amplifier connections for the first phase of the Chopping Clock and Figure 4-3 shows them for the second phase. Its slow voltage errors alternate in polarity, making the average error small.

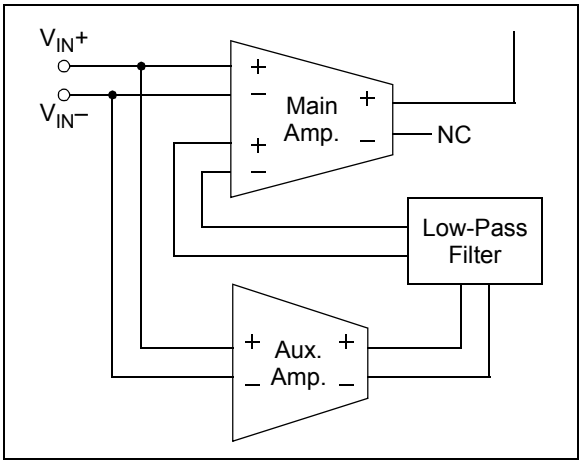

FIGURE 4-2: *First Chopping Clock Phase; Equivalent Amplifier Diagram.*

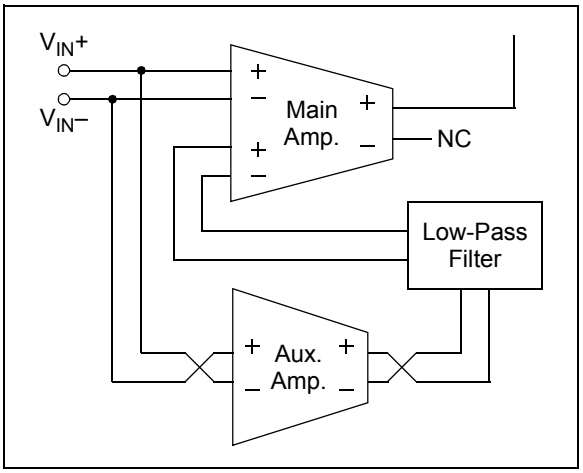

FIGURE 4-3: *Second Chopping Clock Phase; Equivalent Amplifier Diagram.*

© 2019 Microchip Technology Inc.

4.1.3 INTERMODULATION DISTORTION (IMD)

These op amps will show intermodulation distortion (IMD) products when an AC signal is present.

The signal and clock can be decomposed into sine wave tones (Fourier series components). These tones interact with the zero-drift circuitry's nonlinear response to produce IMD tones at sum and difference frequencies. Each of the square wave clock's harmonics has a series of IMD tones centered on it. See Figure 2-33 and Figure 2-34.

4.2 Other Functional Blocks

4.2.1 RAIL-TO-RAIL INPUTS

The input stage of the MCP6V36/6U/7/9 op amps uses two differential CMOS input stages in parallel. One operates at low Common-mode input voltage (V_{CM}, which is approximately equal to $V_{IN}+$ and $V_{IN}-$ in normal operation) and the other at high V_{CM}. With this topology, the input operates with V_{CM} up to V_{DD} + 0.2V, and down to V_{SS} – 0.15V, at +25°C (see Figure 2-15). The input offset voltage (V_{OS}) is measured at $V_{CM} = V_{SS} – 0.15V$ and V_{DD} + 0.2V to ensure proper operation.

The transition between the input stages occurs when $V_{CM} \approx V_{DD} – 0.9V$ (see Figure 2-7 and Figure 2-8). For the best distortion and gain linearity, with noninverting gains, avoid this region of operation.

4.2.1.1 Phase Reversal

The input devices are designed to not exhibit phase inversion when the input pins exceed the supply voltages. Figure 2-38 shows an input voltage exceeding both supplies with no phase inversion.

4.2.1.2 Input Voltage Limits

In order to prevent damage and/or improper operation of these amplifiers, the circuit must limit the voltages at the input pins (see **Section 1.1 "Absolute Maximum Ratings †"**). This requirement is independent of the current limits discussed later on.

The ESD protection on the inputs can be depicted as shown in Figure 4-4. This structure was chosen to protect the input transistors against many (but not all) overvoltage conditions, and to minimize input bias current (I_B).

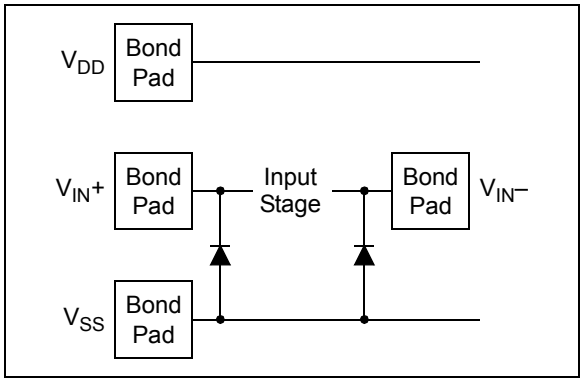

FIGURE 4-4: *Simplified Analog Input ESD Structures.*

The input ESD diodes clamp the inputs when they try to go more than one diode drop below V_{SS}. They also clamp any voltages well above V_{DD}; their breakdown voltage is high enough to allow normal operation, but not low enough to protect against slow overvoltage (beyond V_{DD}) events. Very fast ESD events (that meet the spec) are limited so that damage does not occur.

In some applications, it may be necessary to prevent excessive voltages from reaching the op amp inputs; Figure 4-5 shows one approach to protecting these inputs. D_1 and D_2 may be small signal silicon diodes, Schottky diodes for lower clamping voltages or diode connected FETs for low leakage.

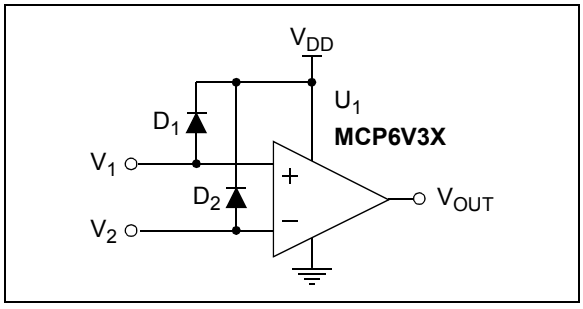

FIGURE 4-5: *Protecting the Analog Inputs Against High Voltages.*

4.2.1.3 Input Current Limits

In order to prevent damage and/or improper operation of these amplifiers, the circuit must limit the currents into the input pins (see **Section 1.1 "Absolute Maximum Ratings †"**). This requirement is independent of the voltage limits discussed previously.

Figure 4-6 shows one approach to protecting these inputs. The resistors R_1 and R_2 limit the possible current in or out of the input pins (and into D_1 and D_2). The diode currents will dump onto V_{DD}.

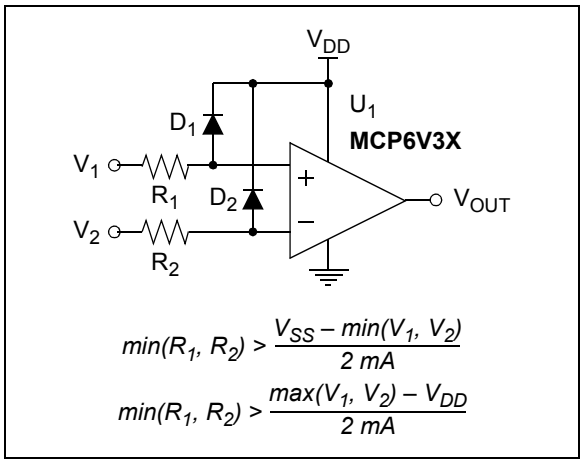

FIGURE 4-6: *Protecting the Analog Inputs Against High Currents.*

It is also possible to connect the diodes to the left of resistors R_1 and R_2. In this case, the currents through the diodes D_1 and D_2 need to be limited by some other mechanism. The resistors then serve as in-rush current limiters; the DC current into the input pins (V_{IN}+ and V_{IN}–) should be very small.

A significant amount of current can flow out of the inputs (through the ESD diodes) when the Common-mode voltage (V_{CM}) is below ground (V_{SS}); see Figure 2-14.

4.2.2 RAIL-TO-RAIL OUTPUT

The output voltage range of the MCP6V36/6U/7/9 zero-drift op amps is V_{DD} – 20 mV (minimum) and V_{SS} + 20 mV (maximum) when R_L = 10 kΩ is connected to $V_{DD}/2$ and V_{DD} = 5.5V. Refer to Figure 2-16 and Figure 2-17 for more information.

This op amp is designed to drive light loads; use another amplifier to buffer the output from heavy loads.

4.3 Application Tips

4.3.1 INPUT OFFSET VOLTAGE OVER TEMPERATURE

Table 1-1 gives both the linear and quadratic temperature coefficients (TC_1 and TC_2) of input offset voltage. The input offset voltage, at any temperature in the specified range, can be calculated as follows:

EQUATION 4-1:

$$V_{OS}(T_A) = V_{OS} + TC_1\Delta T + TC_2\Delta T^2$$

Where:

ΔT	=	T_A – 25°C
$V_{OS}(T_A)$	=	input offset voltage at T_A
V_{OS}	=	input offset voltage at +25°C
TC_1	=	linear temperature coefficient
TC_2	=	quadratic temperature coefficient

4.3.2 DC GAIN PLOTS

Figures 2-9 to 2-11 are histograms of the reciprocals (in units of µV/V) of CMRR, PSRR and A_{OL}, respectively. They represent the change in input offset voltage (V_{OS}) with a change in Common-mode input voltage (V_{CM}), power supply voltage (V_{DD}) and output voltage (V_{OUT}).

The $1/A_{OL}$ histogram is centered near 0 µV/V because the measurements are dominated by the op amp's input noise. The negative values shown represent noise and tester limitations, *not* unstable behavior. Production tests make multiple V_{OS} measurements, which validates an op amp's stability; an unstable part would show greater V_{OS} variability, or the output would stick at one of the supply rails.

4.3.3 OFFSET AT POWER UP

When these parts power up, the input offset (V_{OS}) starts at its uncorrected value (usually less than ±5 mV). Circuits with high DC gain can cause the output to reach one of the two rails. In this case, the time to a valid output is delayed by an output overdrive time (like t_{ODR}), in addition to the start-up time (like t_{STR}).

It can be simple to avoid this extra start-up time. Reducing the gain is one method. Adding a capacitor across the feedback resistor (R_F) is another method.

© 2019 Microchip Technology Inc.

4.3.4 SOURCE RESISTANCES

The input bias currents have two significant components; switching glitches that dominate at room temperature and below, and input ESD diode leakage currents that dominate at +85°C and above.

Make the resistances seen by the inputs small and equal. This minimizes the output offset caused by the input bias currents.

The inputs should see a resistance on the order of 10 Ω to 1 kΩ at high frequencies (i.e., above 1 MHz). This helps minimize the impact of switching glitches, which are very fast, on overall performance. In some cases, it may be necessary to add resistors in series with the inputs to achieve this improvement in performance.

Small input resistances may be needed for high gains. Without them, parasitic capacitances might cause positive feedback and instability.

4.3.5 SOURCE CAPACITANCE

The capacitances seen by the two inputs should be small. Large input capacitances and source resistances, together with high gain, can lead to positive feedback and instability.

4.3.6 CAPACITIVE LOADS

Driving large capacitive loads can cause stability problems for voltage feedback op amps. As the load capacitance increases, the feedback loop's phase margin decreases and the closed-loop bandwidth is reduced. This produces gain peaking in the frequency response, with overshoot and ringing in the step response. These zero-drift op amps have a different output impedance than most op amps, due to their unique topology.

When driving a capacitive load with these op amps, a series resistor at the output (R_{ISO} in Figure 4-7) improves the feedback loop's phase margin (stability) by making the output load resistive at higher frequencies. The bandwidth will be generally lower than the bandwidth with no capacitive load.

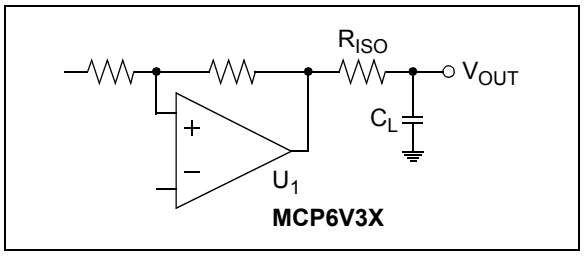

FIGURE 4-7: *Output Resistor, R_{ISO}, Stabilizes Capacitive Loads.*

Figure 4-8 gives recommended R_{ISO} values for different capacitive loads and gains. The x-axis is the load capacitance (C_L). The y-axis is the resistance (R_{ISO}).

G_N is the circuit's noise gain. For noninverting gains, G_N and the Signal Gain are equal. For inverting gains, G_N is 1+|Signal Gain| (e.g., -1 V/V gives G_N = +2 V/V).

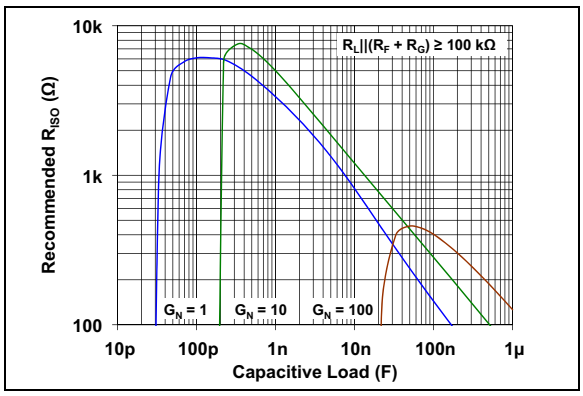

FIGURE 4-8: *Recommended R_{ISO} values for Capacitive Loads.*

After selecting R_{ISO} for your circuit, double check the resulting frequency response peaking and step response overshoot. Modify R_{ISO}'s value until the response is reasonable. Bench evaluation is helpful.

4.3.7 STABILIZING OUTPUT LOADS

This family of zero-drift op amps has an output impedance (Figure 2-27 and Figure 2-28) that has a double zero when the gain is low. This can cause a large phase shift in feedback networks that have low-impedance near the part's bandwidth. This large phase shift can cause stability problems.

Figure 4-9 shows that the load on the output is $(R_L + R_{ISO})||(R_F + R_G)$, where R_{ISO} is before the load (like Figure 4-7). This load needs to be large enough to maintain stability; it should be at least 10 kΩ.

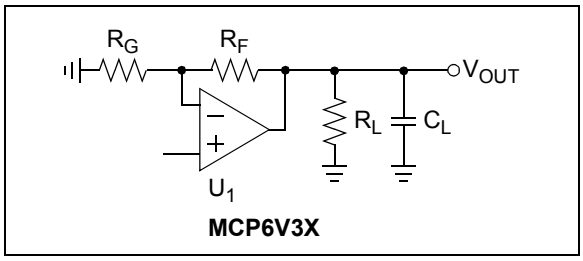

FIGURE 4-9: *Output Load.*

4.3.8 GAIN PEAKING

Figure 4-10 shows an op amp circuit that represents noninverting amplifiers (V_M is a DC voltage and V_P is the input) or inverting amplifiers (V_P is a DC voltage and V_M is the input). The capacitances C_N and C_G represent the total capacitance at the input pins; they include the op amp's Common-mode input capacitance (C_{CM}), board parasitic capacitance and any capacitor placed in parallel. The capacitance C_{FP} represents the parasitic capacitance coupling the output and noninverting input pins.

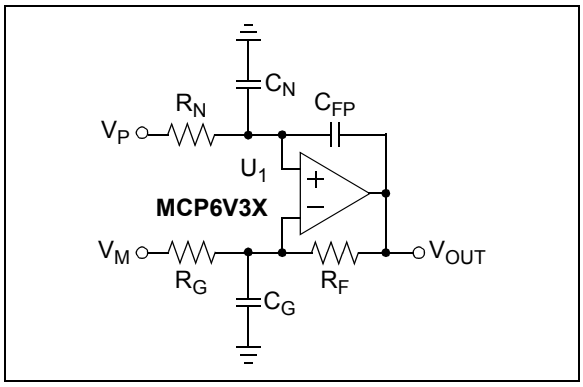

FIGURE 4-10: *Amplifier with Parasitic Capacitance.*

C_G acts in parallel with R_G (except for a gain of +1 V/V), which causes an increase in gain at high frequencies. C_G also reduces the phase margin of the feedback loop, which becomes less stable. This effect can be reduced by either reducing C_G or $R_F||R_G$.

C_N and R_N form a low-pass filter that affects the signal at V_P. This filter has a single real pole at $1/(2\pi R_N C_N)$.

The largest value of R_F that should be used depends on noise gain (see G_N in **Section 4.3.6 "Capacitive Loads"**), C_G and the open-loop gain's phase shift. An approximate limit for R_F is:

EQUATION 4-2:

$$R_F \leq (10\ k\Omega) \times \frac{12\ pF}{C_G} \times G_N^2$$

Some applications may modify these values to reduce either output loading or gain peaking (step response overshoot).

At high gains, R_N needs to be small, in order to prevent positive feedback and oscillations. Large C_N values can also help.

4.3.9 REDUCING UNDESIRED NOISE AND SIGNALS

Reduce undesired noise and signals with:

- Low bandwidth signal filters:
  - Minimizes random analog noise
  - Reduces interfering signals
- Good PCB layout techniques:
  - Minimizes crosstalk
  - Minimizes parasitic capacitances and inductances that interact with fast switching edges
- Good power supply design:
  - Isolation from other parts
  - Filtering of interference on supply line(s)

4.3.10 SUPPLY BYPASSING AND FILTERING

With this family of operational amplifiers, the power supply pin (V_{DD} for single supply) should have a local bypass capacitor (i.e., 0.01 µF to 0.1 µF) within 2 mm of the pin for good high-frequency performance.

These parts also need a bulk capacitor (i.e., 1 µF or larger) within 100 mm to provide large, slow currents. This bulk capacitor can be shared with other low noise, analog parts.

In some cases, high-frequency power supply noise (e.g., switched mode power supplies) may cause undue intermodulation distortion, with a DC offset shift; this noise needs to be filtered. Adding a resistor into the supply connection can be helpful.

4.3.11 PCB DESIGN FOR DC PRECISION

In order to achieve DC precision on the order of ±1 µV, many physical errors need to be minimized. The design of the Printed Circuit Board (PCB), the wiring, and the thermal environment have a strong impact on the precision achieved. A poor PCB design can easily be more than 100 times worse than the MCP6V36/6U/7/9 op amps' minimum and maximum specifications.

4.3.11.1 PCB Layout

Any time two dissimilar metals are joined together, a temperature dependent voltage appears across the junction (the Seebeck or thermojunction effect). This effect is used in thermocouples to measure temperature. The following are examples of thermojunctions on a PCB:

- Components (resistors, op amps, …) soldered to a copper pad
- Wires mechanically attached to the PCB
- Jumpers
- Solder joints
- PCB vias

© 2019 Microchip Technology Inc.

Typical thermojunctions have temperature to voltage conversion coefficients of 1 to 100 µV/°C (sometimes higher).

Microchip's AN1258 ("*Op Amp Precision Design: PCB Layout Techniques*") contains in-depth information on PCB layout techniques that minimize thermojunction effects. It also discusses other effects, such as crosstalk, impedances, mechanical stresses and humidity.

4.3.11.2 Crosstalk

DC crosstalk causes offsets that appear as a larger input offset voltage. Common causes include:

- Common-mode noise (remote sensors)
- Ground loops (current return paths)
- Power supply coupling

Interference from the mains (usually 50 Hz or 60 Hz), and other AC sources, can also affect the DC performance. Nonlinear distortion can convert these signals to multiple tones, including a DC shift in voltage. When the signal is sampled by an ADC, these AC signals can also be aliased to DC, causing an apparent shift in offset.

To reduce interference:

- Keep traces and wires as short as possible
- Use shielding
- Use ground plane (at least a star ground)
- Place the input signal source near to the DUT
- Use good PCB layout techniques
- Use a separate power supply filter (bypass capacitors) for these zero-drift op amps

4.3.11.3 Miscellaneous Effects

Keep the resistances seen by the input pins as small and as near to equal as possible, to minimize bias-current-related offsets.

Make the (trace) capacitances seen by the input pins small and equal. This is helpful in minimizing switching glitch-induced offset voltages.

Bending a coax cable with a radius that is too small causes a small voltage drop to appear on the center conductor (the triboelectric effect). Make sure the bending radius is large enough to keep the conductors and insulation in full contact.

Mechanical stresses can make some capacitor types (such as some ceramics) output small voltages. Use more appropriate capacitor types in the signal path and minimize mechanical stresses and vibration.

Humidity can cause electrochemical potential voltages to appear in a circuit. Proper PCB cleaning helps, as does the use of encapsulants.

4.4 Typical Applications

4.4.1 WHEATSTONE BRIDGE

Many sensors are configured as Wheatstone bridges. Strain gauges and pressure sensors are two common examples. These signals can be small and the Common-mode noise large. Amplifier designs with high differential gain are desirable.

Figure 4-11 shows how to interface to a Wheatstone bridge with a minimum of components. Because the circuit is not symmetric, the ADC input is single ended, and there is a minimum of filtering; the CMRR is good enough for moderate Common-mode noise.

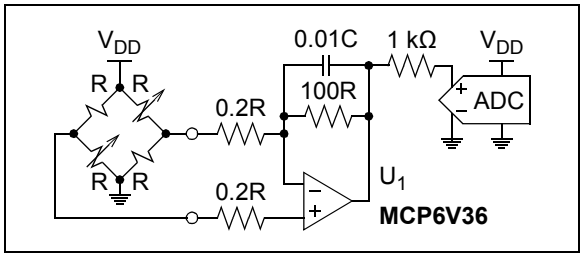

FIGURE 4-11: *Simple Design.*

4.4.2 RTD SENSOR

The ratiometric circuit in Figure 4-12 conditions a two-wire RTD, for applications with a limited temperature range. U_1 acts a difference amplifier, with a low-frequency pole. The sensor's wiring resistance (R_W) is corrected in firmware. Failure (open) of the RTD is detected by an out-of-range voltage.

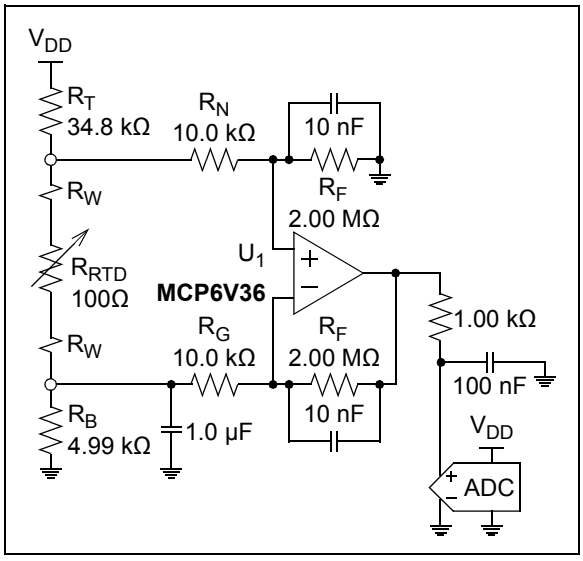

FIGURE 4-12: *RTD Sensor.*

4.4.3 OFFSET VOLTAGE CORRECTION

Figure 4-13 shows MCP6V36 (U_2) correcting the input offset voltage of another op amp (U_1). R_2 and C_2 integrate the offset error seen at U_1's input; the integration needs to be slow enough to be stable (with the feedback provided by R_1 and R_3). R_4 and R_5 attenuate the integrator's output; this shifts the integrator pole down in frequency.

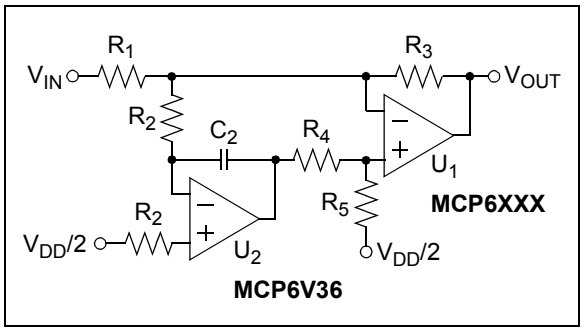

FIGURE 4-13: *Offset Correction.*

4.4.4 PRECISION COMPARATOR

Use high gain before a comparator to improve the latter's performance. Do not use MCP6V36/6U/7/9 as a comparator by itself; the V_{OS} correction circuitry does not operate properly without a feedback loop.

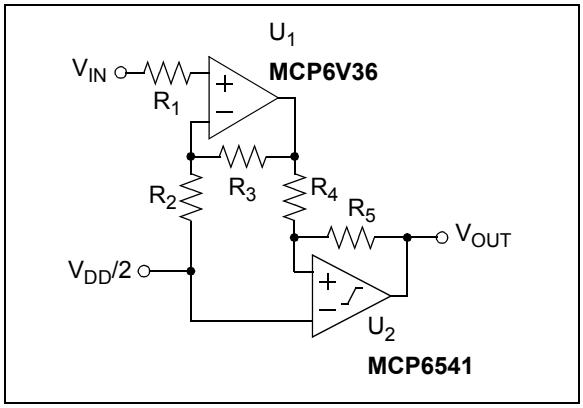

FIGURE 4-14: *Precision Comparator.*

© 2019 Microchip Technology Inc.

NOTES:

5.0 DESIGN AIDS

Microchip provides the basic design aids needed for the MCP6V36/6U/7/9 family of op amps.

5.1 SPICE Macro Model

The latest SPICE macro model for the MCP6V36/6U/7/9 op amps is available on the Microchip web site at www.microchip.com. This model is intended to be an initial design tool that works well in the op amp's linear region of operation over the temperature range. See the model file for information on its capabilities.

Bench testing is a very important part of any design and cannot be replaced with simulations. Also, simulation results using this macro model need to be validated by comparing them to the data sheet specifications and characteristic curves.

5.2 Microchip Advanced Part Selector (MAPS)

MAPS is a software tool that helps efficiently identify Microchip devices that fit a particular design requirement. Available at no cost from the Microchip web site at www.microchip.com/maps, MAPS is an overall selection tool for Microchip's product portfolio that includes Analog, Memory, MCUs and DSCs. Using this tool, a customer can define a filter to sort features for a parametric search of devices and export side-by-side technical comparison reports. Helpful links are also provided for Data Sheets, Purchase and Sampling of Microchip parts.

5.3 Analog Demonstration and Evaluation Boards

Microchip offers a broad spectrum of Analog Demonstration and Evaluation Boards that are designed to help customers achieve faster time to market. For a complete listing of these boards and their corresponding user's guides and technical information, visit the Microchip web site at www.microchip.com/treelinktool.

Some boards that are especially useful are:

- MCP6V01 Thermocouple Auto-Zeroed Reference Design (P/N MCP6V01RD-TCPL)
- MCP6XXX Amplifier Evaluation Board 2 (P/N DS51668)
- MCP6XXX Amplifier Evaluation Board 3 (P/N DS51673)
- 8-Pin SOIC/MSOP/TSSOP/DIP Evaluation Board (P/N SOIC8EV)
- 14-Pin SOIC/TSSOP/DIP Evaluation Board (P/N SOIC14EV)

5.4 Application Notes

The following Microchip Application Notes are available on the Microchip web site at www.microchip.com/sitesearch/Search/all and are recommended as supplemental reference resources.

ADN003: *"Select the Right Operational Amplifier for your Filtering Circuits"*, DS21821

AN722: *"Operational Amplifier Topologies and DC Specifications"*, DS00722

AN723: *"Operational Amplifier AC Specifications and Applications"*, DS00723

AN884: *"Driving Capacitive Loads With Op Amps"*, DS00884

AN990: *"Analog Sensor Conditioning Circuits – An Overview"*, DS00990

AN1177: *"Op Amp Precision Design: DC Errors"*, DS01177

AN1228: *"Op Amp Precision Design: Random Noise*", DS01228

AN1258: *"Op Amp Precision Design: PCB Layout Techniques"*, DS01258

These Application Notes and others are listed in the design guide:

"Signal Chain Design Guide", DS21825

© 2019 Microchip Technology Inc.

NOTES:

6.0 PACKAGING INFORMATION

6.1 Package Marking Information

5-Lead SC70 (**MCP6V36U**)

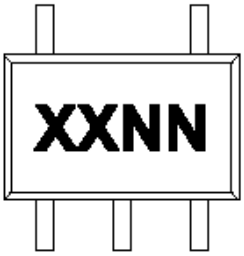

Device	Code
MCP6V36UT-E/LTY	FSNN

Note: Applies to 5-Lead SC-70.

Example:

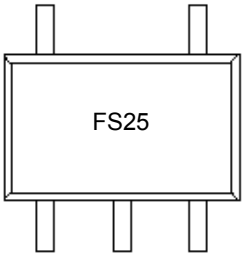

5-Lead SOT-23 **(MCP6V36, MCP6V36U)**

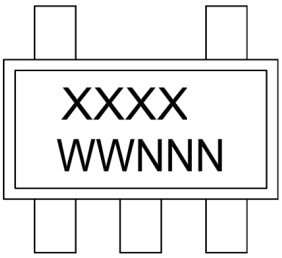

Device	Code
MCP6V36T-E/OT	RBDF WWNNN
MCP6V36UT-E/OT	RBDG WWNNN

Note: Applies to 5-Lead SOT-23.

Example:

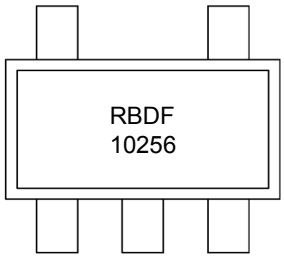

8-Lead MSOP (3 x 3 mm) **(MCP6V37)**

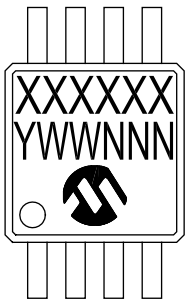

Example

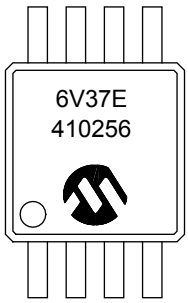

Legend:	XX...X	Customer-specific information
	Y	Year code (last digit of calendar year)
	YY	Year code (last 2 digits of calendar year)
	WW	Week code (week of January 1 is week '01')
	NNN	Alphanumeric traceability code
	(e3)	Pb-free JEDEC® designator for Matte Tin (Sn)
	*	This package is Pb-free. The Pb-free JEDEC designator ((e3)) can be found on the outer packaging for this package.

Note: In the event the full Microchip part number cannot be marked on one line, it will be carried over to the next line, thus limiting the number of available characters for customer-specific information.

© 2019 Microchip Technology Inc.

8-Lead TDFN (2 x 3 x 0.8 mm) **(MCP6V37)**



Device	Code
MCP6V37-E/MNY	DM2
MCP6V37T-E/MNY	DM2

Note: Applies to 8-Lead 2x3 TDFN.

Example



14-Lead TSSOP (4.4 mm) **(MCP6V39)**

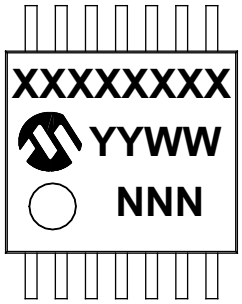

Example

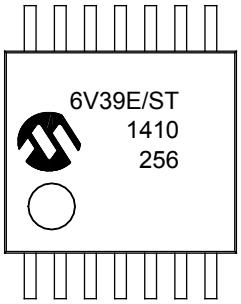

5-Lead Plastic Small Outline Transistor (LT) [SC70]

Note: For the most current package drawings, please see the Microchip Packaging Specification located at http://www.microchip.com/packaging

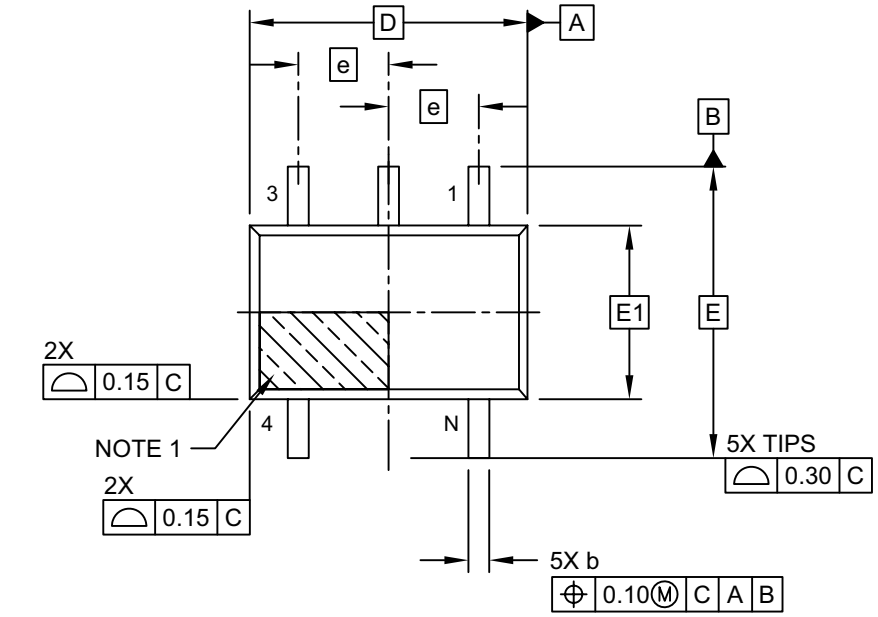

TOP VIEW

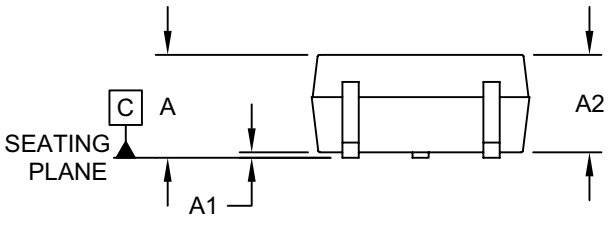

SIDE VIEW

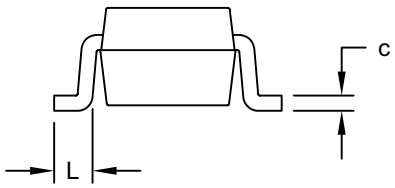

END VIEW

Microchip Technology Drawing C04-061D Sheet 1 of 2

© 2019 Microchip Technology Inc.

5-Lead Plastic Small Outline Transistor (LT) [SC70]

Note: For the most current package drawings, please see the Microchip Packaging Specification located at http://www.microchip.com/packaging

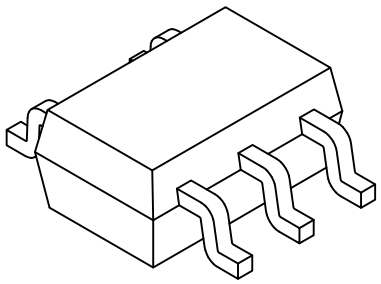

Units		MILLIMETERS		
Dimension Limits		MIN	NOM	MAX
Number of Pins	N		5	
Pitch	e		0.65 BSC	
Overall Height	A	0.80	-	1.10
Standoff	A1	0.00	-	0.10
Molded Package Thickness	A2	0.80	-	1.00
Overall Length	D		2.00 BSC	
Exposed Pad Length	D2	2.50	2.60	2.70
Overall Width	E		2.10 BSC	
Exposed Pad Width	E1		1.25 BSC	
Terminal Width	b	0.15	-	0.40
Terminal Length	L	0.10	0.20	0.46
Lead Thickness	c	0.08	-	0.26

Notes:

1. Pin 1 visual index feature may vary, but must be located within the hatched area.
2. Dimensions D and E1 do not include mold flash or protrusions. Mold flash or protrusions shall not exceed 0.15mm per side.
3. Dimensioning and tolerancing per ASME Y14.5M

BSC: Basic Dimension. Theoretically exact value shown without tolerances.

REF: Reference Dimension, usually without tolerance, for information purposes only.

Microchip Technology Drawing C04-061D Sheet 2 of 2

© 2019 Microchip Technology Inc.

5-Lead Plastic Small Outline Transistor (LT) [SC70]

Note: For the most current package drawings, please see the Microchip Packaging Specification located at http://www.microchip.com/packaging

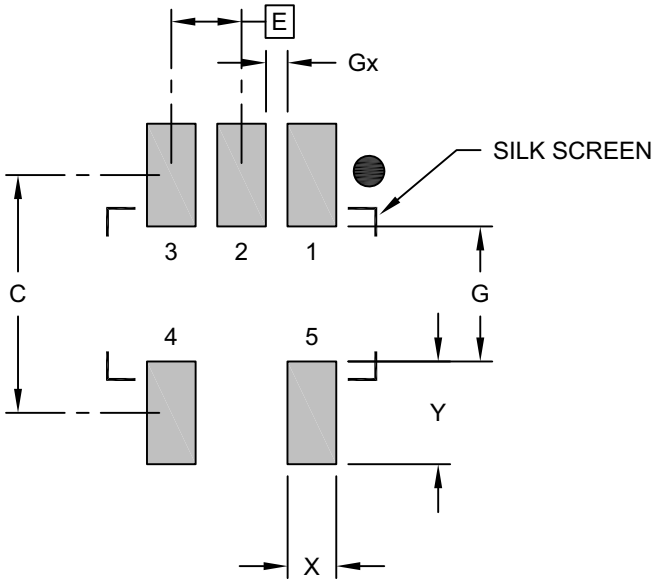

RECOMMENDED LAND PATTERN

Units		MILLIMETERS		
Dimension Limits		MIN	NOM	MAX
Contact Pitch	E	0.65 BSC		
Contact Pad Spacing	C		2.20	
Contact Pad Width	X			0.45
Contact Pad Length	Y			0.95
Distance Between Pads	G	1.25		
Distance Between Pads	Gx	0.20		

Notes:

1. Dimensioning and tolerancing per ASME Y14.5M

BSC: Basic Dimension. Theoretically exact value shown without tolerances.

Microchip Technology Drawing No. C04-2061B

© 2019 Microchip Technology Inc.

5-Lead Plastic Small Outline Transistor (OT) [SOT23]

Note: For the most current package drawings, please see the Microchip Packaging Specification located at http://www.microchip.com/packaging

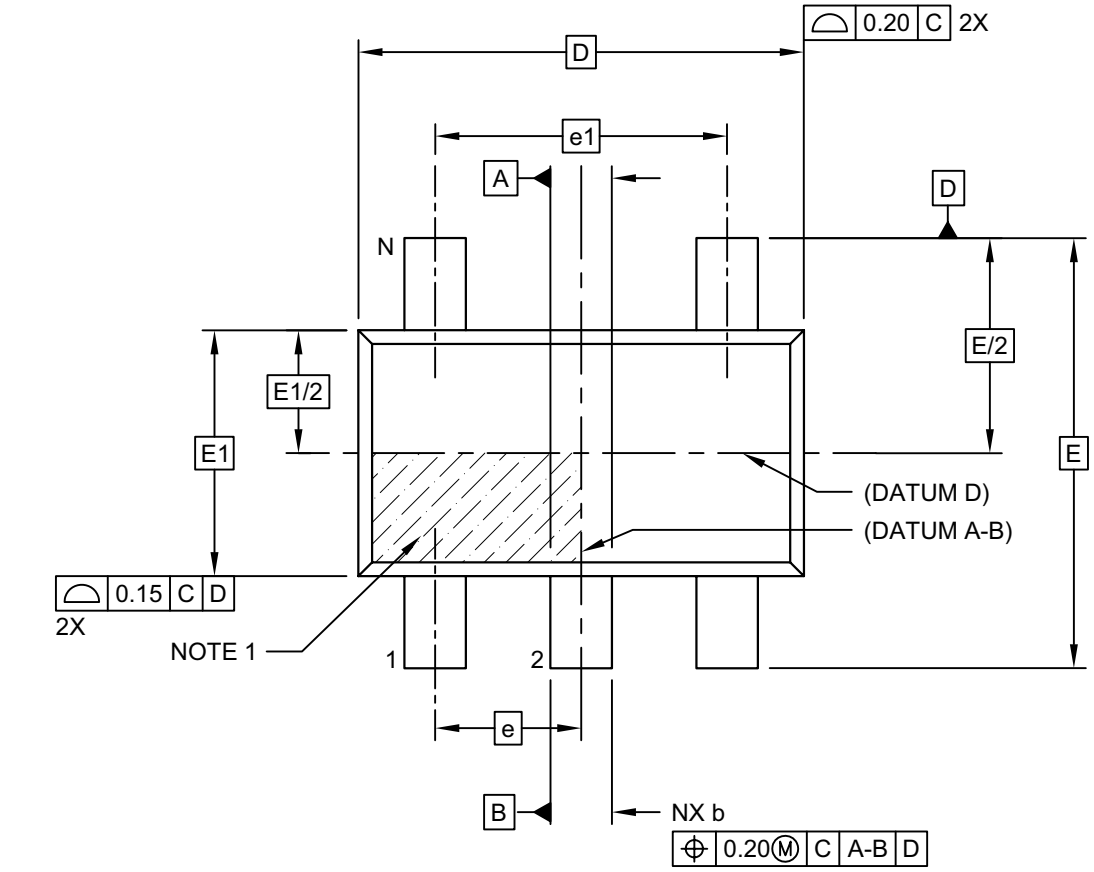

TOP VIEW

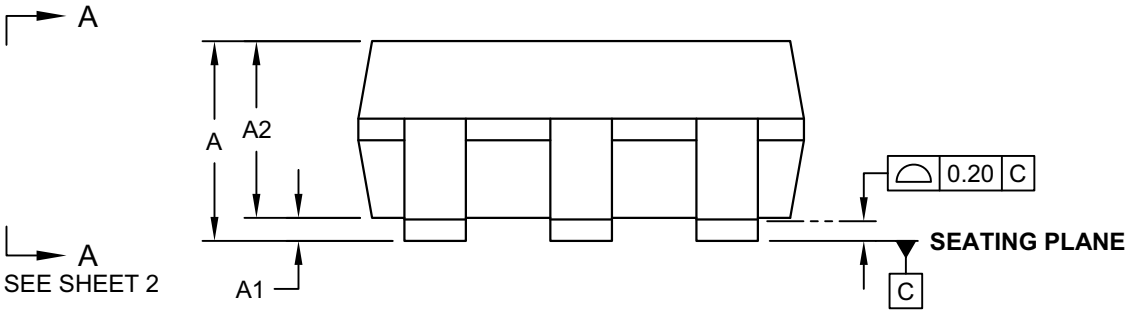

SIDE VIEW

Microchip Technology Drawing C04-091-OT Rev E Sheet 1 of 2

5-Lead Plastic Small Outline Transistor (OT) [SOT23]

Note: For the most current package drawings, please see the Microchip Packaging Specification located at http://www.microchip.com/packaging

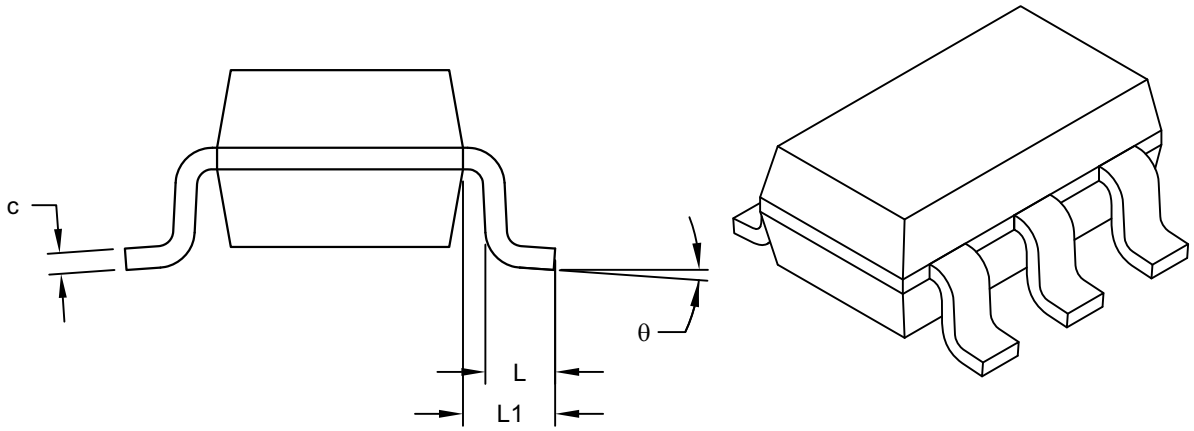

VIEW A-A
SHEET 1

Units		MILLIMETERS		
Dimension Limits		MIN	NOM	MAX
Number of Pins	N		5	
Pitch	e		0.95 BSC	
Outside lead pitch	e1		1.90 BSC	
Overall Height	A	0.90	-	1.45
Molded Package Thickness	A2	0.89	-	1.30
Standoff	A1	-	-	0.15
Overall Width	E		2.80 BSC	
Molded Package Width	E1		1.60 BSC	
Overall Length	D		2.90 BSC	
Foot Length	L	0.30	-	0.60
Footprint	L1		0.60 REF	
Foot Angle	ϕ	0°	-	10°
Lead Thickness	c	0.08	-	0.26
Lead Width	b	0.20	-	0.51

Notes:

1. Dimensions D and E1 do not include mold flash or protrusions. Mold flash or protrusions shall not exceed 0.25mm per side.
2. Dimensioning and tolerancing per ASME Y14.5M
   BSC: Basic Dimension. Theoretically exact value shown without tolerances.
   REF: Reference Dimension, usually without tolerance, for information purposes only.

Microchip Technology Drawing C04-091-OT Rev E Sheet 2 of 2

© 2019 Microchip Technology Inc.

5-Lead Plastic Small Outline Transistor (OT) [SOT23]

Note: For the most current package drawings, please see the Microchip Packaging Specification located at http://www.microchip.com/packaging

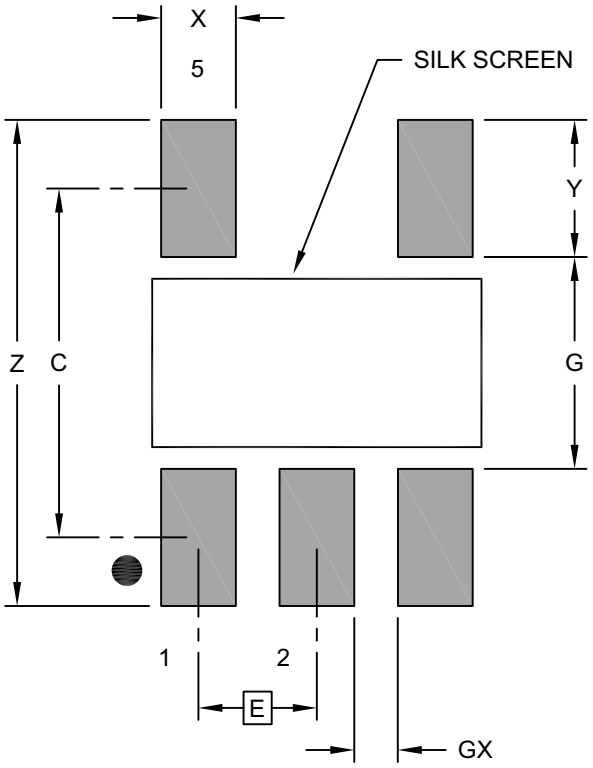

RECOMMENDED LAND PATTERN

Units		MILLIMETERS		
Dimension Limits		MIN	NOM	MAX
Contact Pitch	E		0.95 BSC	
Contact Pad Spacing	C		2.80	
Contact Pad Width (X5)	X			0.60
Contact Pad Length (X5)	Y			1.10
Distance Between Pads	G	1.70		
Distance Between Pads	GX	0.35		
Overall Width	Z			3.90

Notes:

1. Dimensioning and tolerancing per ASME Y14.5M

BSC: Basic Dimension. Theoretically exact value shown without tolerances.

Microchip Technology Drawing No. C04-2091B [OT]

8-Lead Plastic Micro Small Outline Package (MS) [MSOP]

Note: For the most current package drawings, please see the Microchip Packaging Specification located at http://www.microchip.com/packaging

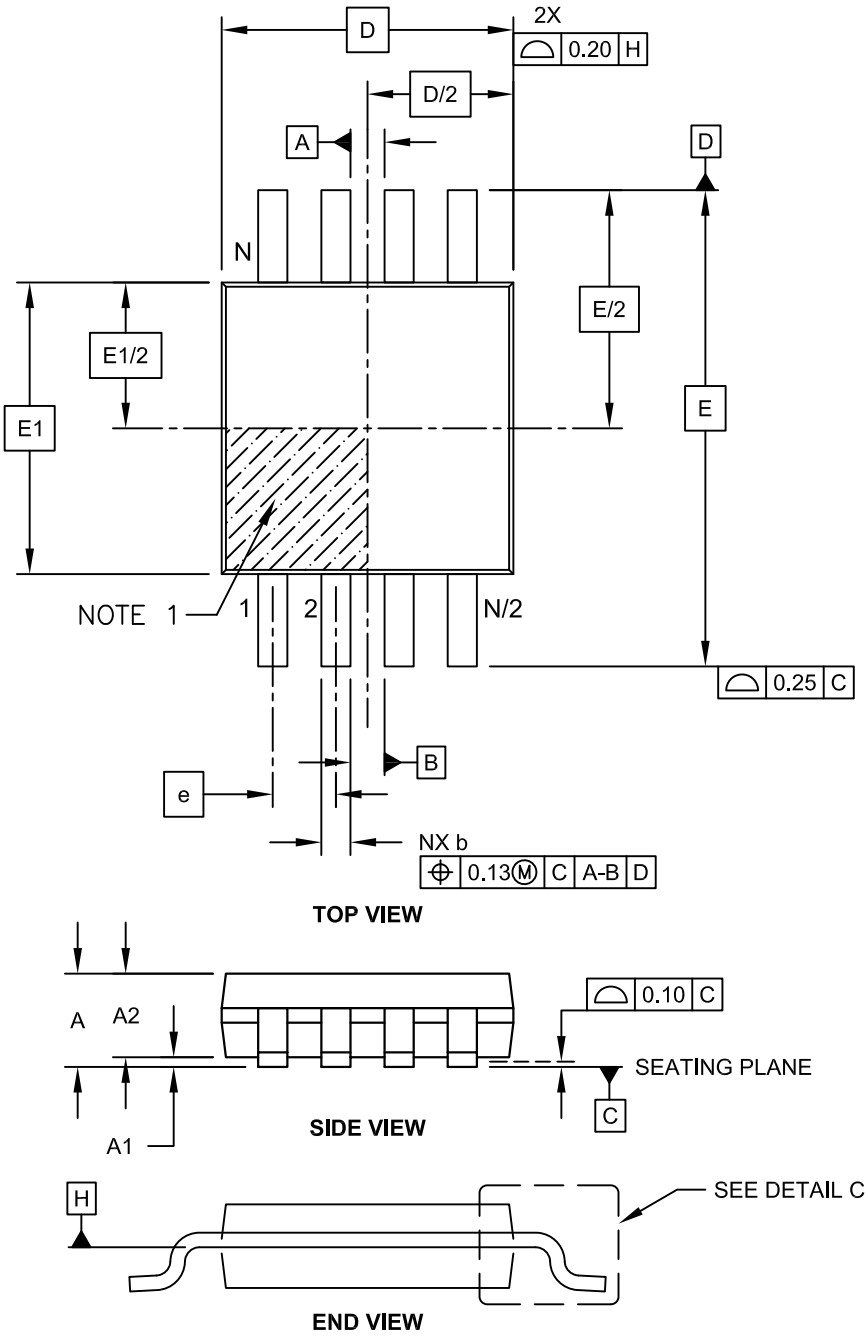

Microchip Technology Drawing C04-111C Sheet 1 of 2

© 2019 Microchip Technology Inc.

8-Lead Plastic Micro Small Outline Package (MS) [MSOP]

Note: For the most current package drawings, please see the Microchip Packaging Specification located at http://www.microchip.com/packaging

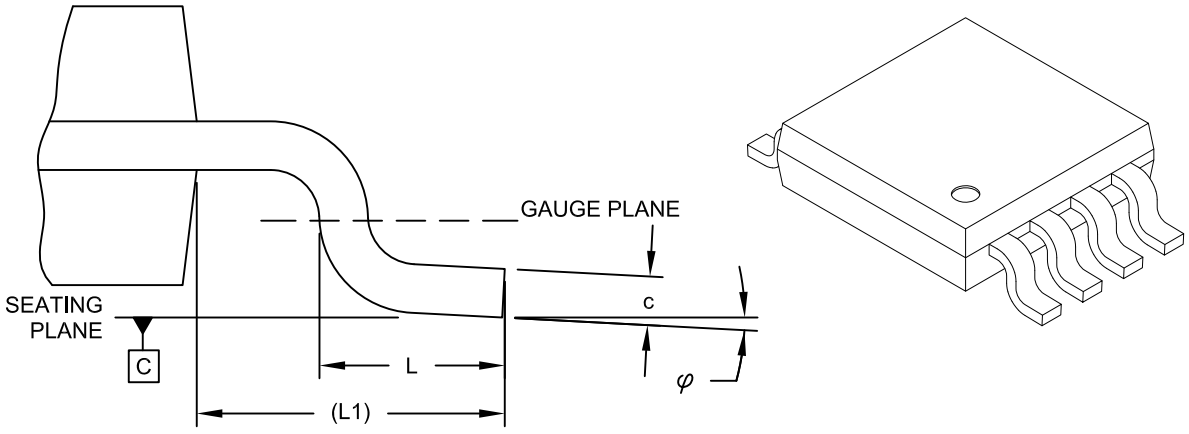

DETAIL C

Units		MILLIMETERS		
Dimension Limits		MIN	NOM	MAX
Number of Pins	N		8	
Pitch	e		0.65 BSC	
Overall Height	A	-	-	1.10
Molded Package Thickness	A2	0.75	0.85	0.95
Standoff	A1	0.00	-	0.15
Overall Width	E		4.90 BSC	
Molded Package Width	E1		3.00 BSC	
Overall Length	D		3.00 BSC	
Foot Length	L	0.40	0.60	0.80
Footprint	L1		0.95 REF	
Foot Angle	φ	0°	-	8°
Lead Thickness	c	0.08	-	0.23
Lead Width	b	0.22	-	0.40

Notes:

1. Pin 1 visual index feature may vary, but must be located within the hatched area.
2. Dimensions D and E1 do not include mold flash or protrusions. Mold flash or protrusions shall not exceed 0.15mm per side.
3. Dimensioning and tolerancing per ASME Y14.5M.
   BSC: Basic Dimension. Theoretically exact value shown without tolerances.
   REF: Reference Dimension, usually without tolerance, for information purposes only.

Microchip Technology Drawing C04-111C Sheet 2 of 2

© 2019 Microchip Technology Inc.

8-Lead Plastic Micro Small Outline Package (MS) [MSOP]

Note: For the most current package drawings, please see the Microchip Packaging Specification located at http://www.microchip.com/packaging

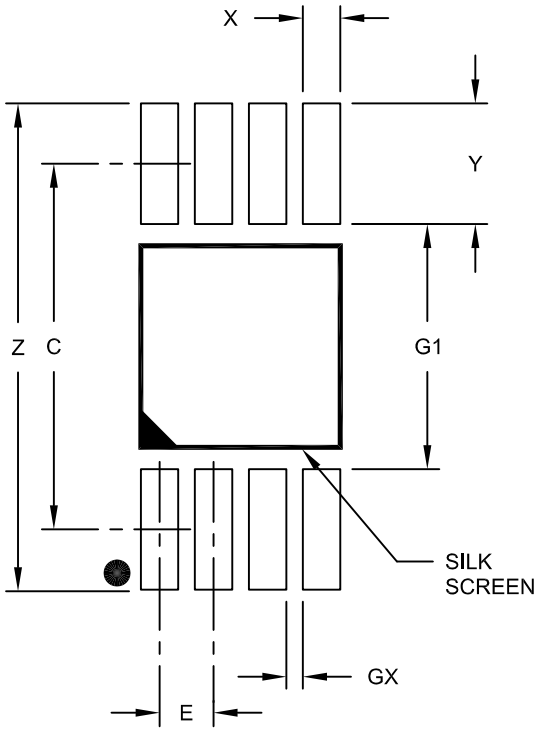

RECOMMENDED LAND PATTERN

Units		MILLIMETERS		
Dimension Limits		MIN	NOM	MAX
Contact Pitch	E		0.65 BSC	
Contact Pad Spacing	C		4.40	
Overall Width	Z			5.85
Contact Pad Width (X8)	X1			0.45
Contact Pad Length (X8)	Y1			1.45
Distance Between Pads	G1	2.95		
Distance Between Pads	GX	0.20		

Notes:

1. Dimensioning and tolerancing per ASME Y14.5M

BSC: Basic Dimension. Theoretically exact value shown without tolerances.

Microchip Technology Drawing No. C04-2111A

© 2019 Microchip Technology Inc.

8-Lead Plastic Dual Flat, No Lead Package (MN) – 2x3x0.8 mm Body [TDFN]
With 1.4x1.3 mm Exposed Pad (JEDEC Package type WDFN)

Note:	For the most current package drawings, please see the Microchip Packaging Specification located at http://www.microchip.com/packaging

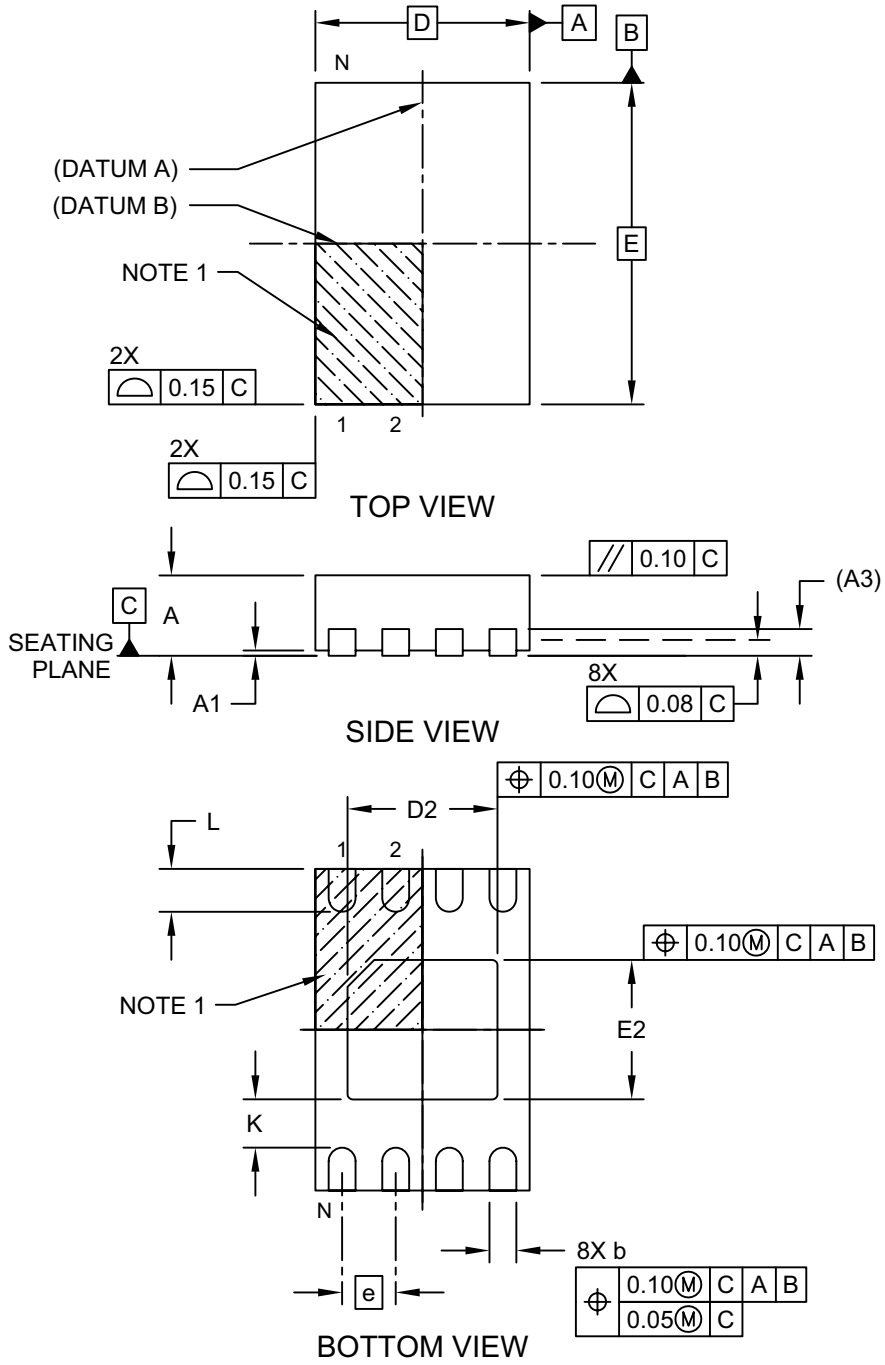

Microchip Technology Drawing No. C04-129-MN Rev E Sheet 1 of 2

8-Lead Plastic Dual Flat, No Lead Package (MN) – 2x3x0.8 mm Body [TDFN] With 1.4x1.3 mm Exposed Pad (JEDEC Package type WDFN)

Note: For the most current package drawings, please see the Microchip Packaging Specification located at http://www.microchip.com/packaging

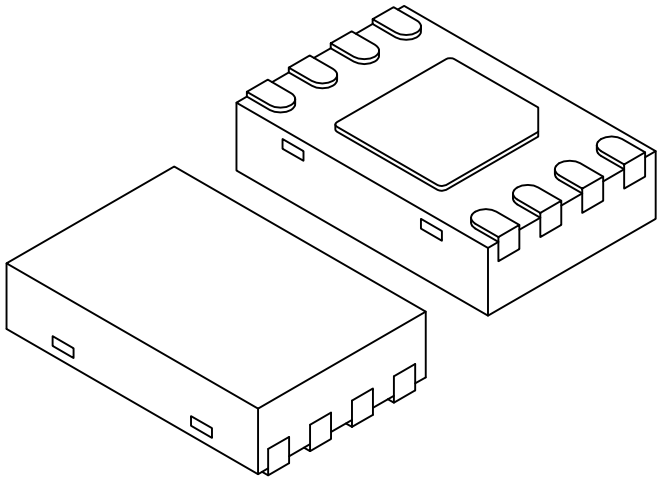

Units		MILLIMETERS		
Dimension Limits		MIN	NOM	MAX
Number of Pins	N		8	
Pitch	e		0.50 BSC	
Overall Height	A	0.70	0.75	0.80
Standoff	A1	0.00	0.02	0.05
Contact Thickness	A3		0.20 REF	
Overall Length	D		2.00 BSC	
Overall Width	E		3.00 BSC	
Exposed Pad Length	D2	1.35	1.40	1.45
Exposed Pad Width	E2	1.25	1.30	1.35
Contact Width	b	0.20	0.25	0.30
Contact Length	L	0.25	0.30	0.45
Contact-to-Exposed Pad	K	0.20	-	-

Notes:

1. Pin 1 visual index feature may vary, but must be located within the hatched area.
2. Package may have one or more exposed tie bars at ends.
3. Package is saw singulated
4. Dimensioning and tolerancing per ASME Y14.5M

BSC: Basic Dimension. Theoretically exact value shown without tolerances.
REF: Reference Dimension, usually without tolerance, for information purposes only.

Microchip Technology Drawing No. C04-129-MN Rev E Sheet 2 of 2

© 2019 Microchip Technology Inc.

8-Lead Plastic Dual Flat, No Lead Package (MN) – 2x3x0.8 mm Body [TDFN] With 1.4x1.3 mm Exposed Pad (JEDEC Package type WDFN)

Note: For the most current package drawings, please see the Microchip Packaging Specification located at http://www.microchip.com/packaging

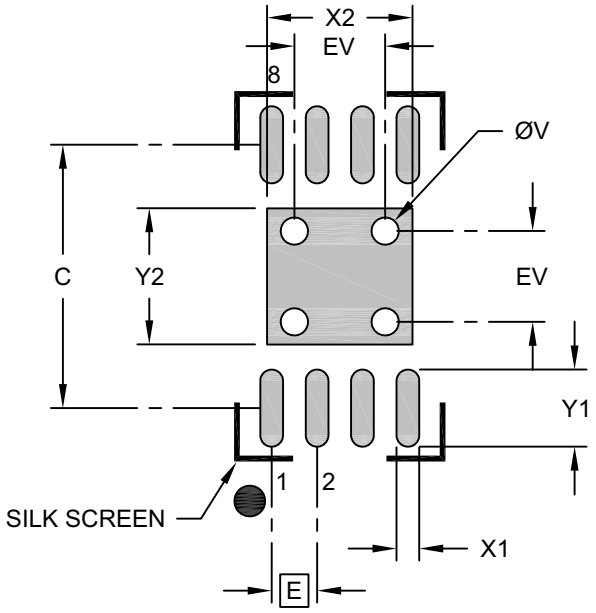

RECOMMENDED LAND PATTERN

Units		MILLIMETERS		
Dimension Limits		MIN	NOM	MAX
Contact Pitch	E	0.50 BSC		
Optional Center Pad Width	X2			1.60
Optional Center Pad Length	Y2			1.50
Contact Pad Spacing	C		2.90	
Contact Pad Width (X8)	X1			0.25
Contact Pad Length (X8)	Y1			0.85
Thermal Via Diameter	V		0.30	
Thermal Via Pitch	EV		1.00	

Notes:

1. Dimensioning and tolerancing per ASME Y14.5M
   BSC: Basic Dimension. Theoretically exact value shown without tolerances.
2. For best soldering results, thermal vias, if used, should be filled or tented to avoid solder loss during reflow process

Microchip Technology Drawing No. C04-129-MN Rev. B

14-Lead Plastic Thin Shrink Small Outline (ST) - 4.4 mm Body [TSSOP]

Note: For the most current package drawings, please see the Microchip Packaging Specification located at http://www.microchip.com/packaging

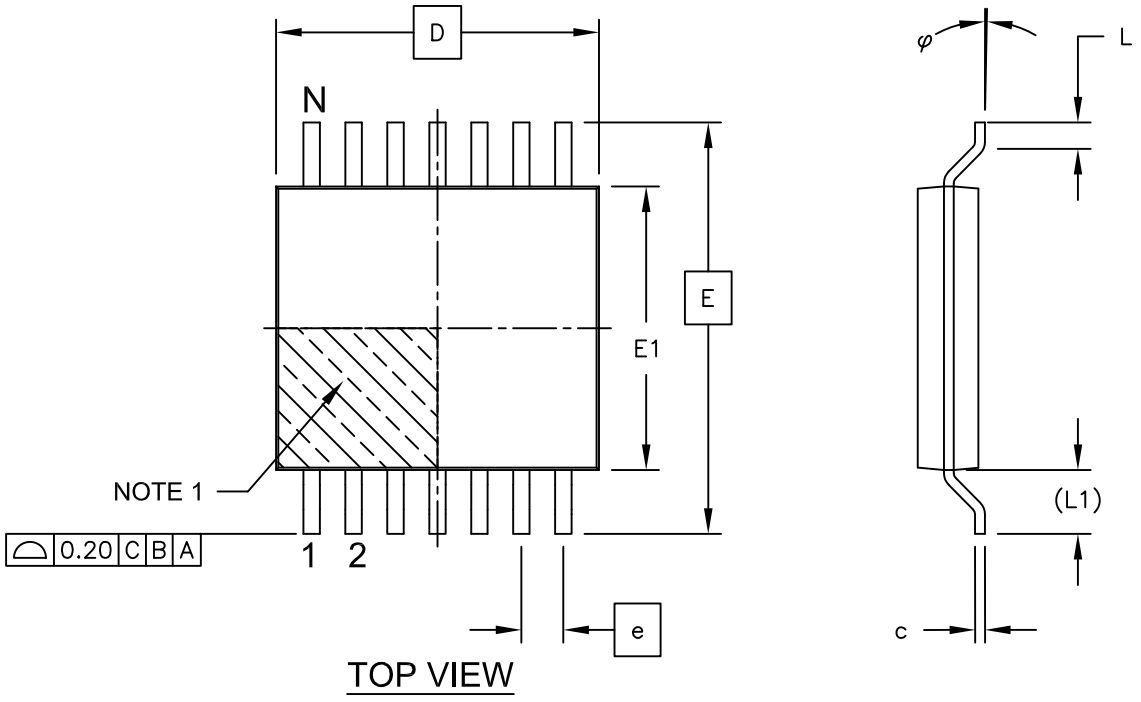

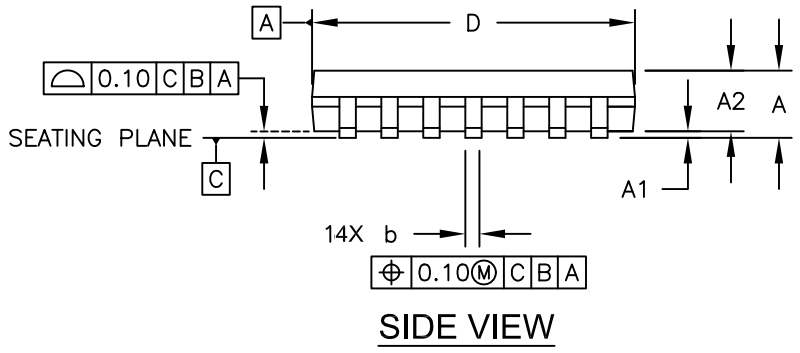

Microchip Technology Drawing C04-087C Sheet 1 of 2

© 2019 Microchip Technology Inc.

14-Lead Plastic Thin Shrink Small Outline (ST) - 4.4 mm Body [TSSOP]

Note: For the most current package drawings, please see the Microchip Packaging Specification located at http://www.microchip.com/packaging

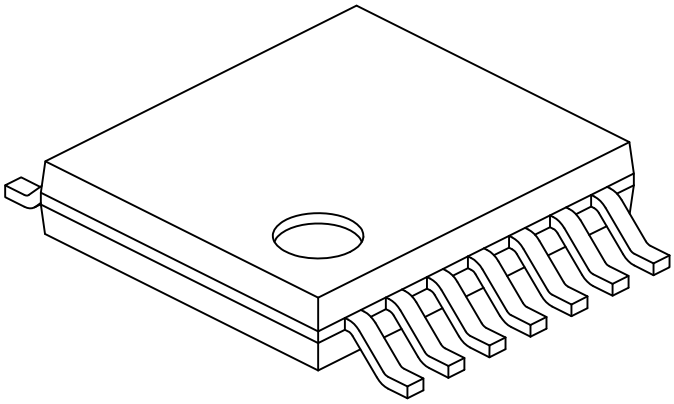

Units		MILLIMETERS		
Dimension Limits		MIN	NOM	MAX
Number of Pins	N		14	
Pitch	e		0.65 BSC	
Overall Height	A	-	-	1.20
Molded Package Thickness	A2	0.80	1.00	1.05
Standoff	A1	0.05	-	0.15
Overall Width	E		6.40 BSC	
Molded Package Width	E1	4.30	4.40	4.50
Molded Package Length	D	4.90	5.00	5.10
Foot Length	L	0.45	0.60	0.75
Footprint	(L1)		1.00 REF	
Foot Angle	φ	0°	-	8°
Lead Thickness	c	0.09	-	0.20
Lead Width	b	0.19	-	0.30

Notes:

1. Pin 1 visual index feature may vary, but must be located within the hatched area.
2. Dimensions D and E1 do not include mold flash or protrusions. Mold flash or protrusions shall not exceed 0.15mm per side.
3. Dimensioning and tolerancing per ASME Y14.5M

BSC: Basic Dimension. Theoretically exact value shown without tolerances.
REF: Reference Dimension, usually without tolerance, for information purposes only.

Microchip Technology Drawing No. C04-087C Sheet 2 of 2

14-Lead Plastic Thin Shrink Small Outline (ST) - 4.4 mm Body [TSSOP]

Note: For the most current package drawings, please see the Microchip Packaging Specification located at http://www.microchip.com/packaging

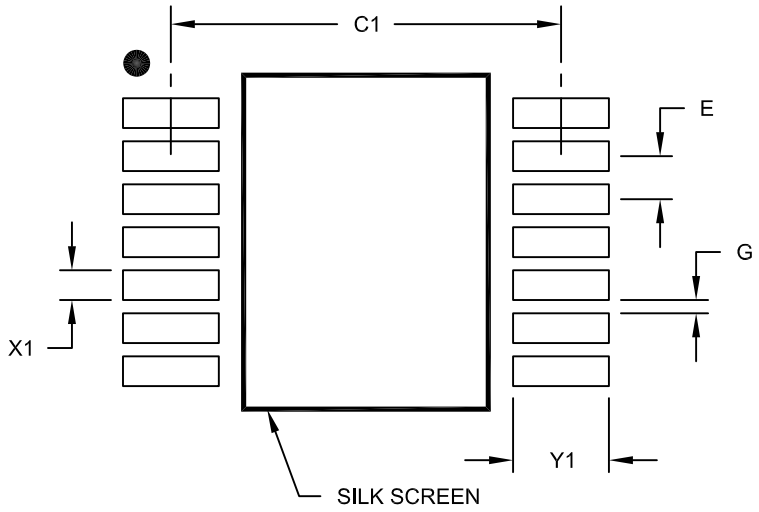

RECOMMENDED LAND PATTERN

Units		MILLIMETERS		
Dimension Limits		MIN	NOM	MAX
Contact Pitch	E		0.65 BSC	
Contact Pad Spacing	C1		5.90	
Contact Pad Width (X14)	X1			0.45
Contact Pad Length (X14)	Y1			1.45
Distance Between Pads	G	0.20		

Notes:

1. Dimensioning and tolerancing per ASME Y14.5M

BSC: Basic Dimension. Theoretically exact value shown without tolerances.

Microchip Technology Drawing No. C04-2087A

© 2019 Microchip Technology Inc.

APPENDIX A: REVISION HISTORY

Revision A (July 2019)

- Initial release of this document.

NOTES:

© 2019 Microchip Technology Inc.

PRODUCT IDENTIFICATION SYSTEM

To order or obtain information, e.g., on pricing or delivery, refer to the factory or the listed sales office.

PART NO.	[X](1)	–X	/XX
Device	Tape and Reel	Temperature Range	Package

Device:	MCP6V36T:	Single Op Amp (Tape and Reel) (SOT-23)
	MCP6V36UT:	Single Op Amp (Tape and Reel) (SC-70, SOT-23)
	MCP6V37:	Dual Op Amp (MSOP, 2x3 TDFN)
	MCP6V37T:	Dual Op Amp (Tape and Reel) (MSOP, 2x3 TDFN)
	MCP6V39:	Quad Op Amp (TSSOP)
	MCP6V39T:	Quad Op Amp (Tape and Reel) (TSSOP)
Temperature Range:	E =	-40°C to +125°C (Extended)
Package:	LTY* =	Plastic Small Outline Transistor, 5-lead
	OT =	Plastic Small Outline Transistor, 5-lead
	MNY* =	Plastic Dual Flat, No-Lead - 2×3×0.8 mm Body, 8-lead
	MS =	Plastic Micro Small Outline, 8-lead
	ST =	Plastic Thin Shrink Small Outline - 4.4 mm Body, 14-lead

* Y = Nickel palladium gold manufacturing designator. Only available on the TDFN and SC-70 packages.

Examples:

a) MCP6V36T-E/OT: Tape and Reel, Extended temperature, 5LD SOT-23 package

a) MCP6V36UT-E/LTY: Tape and Reel Extended temperature, 5LD SC70 package

b) MCP6V36UT-E/OT: Tape and Reel, Extended temperature, 5LD SOT-23 package

a) MCP6V37-E/MS: Extended temperature, 8LD MSOP package

b) MCP6V37T-E/MS: Tape and Reel, Extended temperature, 8LD MSOP package

c) MCP6V37T-E/MNY: Tape and Reel, Extended temperature, 8LD 2x3 TDFN package

a) MCP6V39-E/ST: Extended temperature, 14LD TSSOP package

b) MCP6V39T-E/ST: Tape and Reel Extended temperature, 14LD TSSOP package

Note 1: Tape and Reel identifier only appears in the catalog part number description. This identifier is used for ordering purposes and is not printed on the device package. Check with your Microchip Sales Office for package availability with the Tape and Reel option.

NOTES:

© 2019 Microchip Technology Inc.

Note the following details of the code protection feature on Microchip devices:

- Microchip products meet the specification contained in their particular Microchip Data Sheet.
- Microchip believes that its family of products is one of the most secure families of its kind on the market today, when used in the intended manner and under normal conditions.
- There are dishonest and possibly illegal methods used to breach the code protection feature. All of these methods, to our knowledge, require using the Microchip products in a manner outside the operating specifications contained in Microchip's Data Sheets. Most likely, the person doing so is engaged in theft of intellectual property.
- Microchip is willing to work with the customer who is concerned about the integrity of their code.
- Neither Microchip nor any other semiconductor manufacturer can guarantee the security of their code. Code protection does not mean that we are guaranteeing the product as "unbreakable."

Code protection is constantly evolving. We at Microchip are committed to continuously improving the code protection features of our products. Attempts to break Microchip's code protection feature may be a violation of the Digital Millennium Copyright Act. If such acts allow unauthorized access to your software or other copyrighted work, you may have a right to sue for relief under that Act.

Information contained in this publication regarding device applications and the like is provided only for your convenience and may be superseded by updates. It is your responsibility to ensure that your application meets with your specifications. MICROCHIP MAKES NO REPRESENTATIONS OR WARRANTIES OF ANY KIND WHETHER EXPRESS OR IMPLIED, WRITTEN OR ORAL, STATUTORY OR OTHERWISE, RELATED TO THE INFORMATION, INCLUDING BUT NOT LIMITED TO ITS CONDITION, QUALITY, PERFORMANCE, MERCHANTABILITY OR FITNESS FOR PURPOSE**.** Microchip disclaims all liability arising from this information and its use. Use of Microchip devices in life support and/or safety applications is entirely at the buyer's risk, and the buyer agrees to defend, indemnify and hold harmless Microchip from any and all damages, claims, suits, or expenses resulting from such use. No licenses are conveyed, implicitly or otherwise, under any Microchip intellectual property rights unless otherwise stated.

For information regarding Microchip's Quality Management Systems, please visit www.microchip.com/quality.

Trademarks

The Microchip name and logo, the Microchip logo, Adaptec, AnyRate, AVR, AVR logo, AVR Freaks, BesTime, BitCloud, chipKIT, chipKIT logo, CryptoMemory, CryptoRF, dsPIC, FlashFlex, flexPWR, HELDO, IGLOO, JukeBlox, KeeLoq, Kleer, LANCheck, LinkMD, maXStylus, maXTouch, MediaLB, megaAVR, Microsemi, Microsemi logo, MOST, MOST logo, MPLAB, OptoLyzer, PackeTime, PIC, picoPower, PICSTART, PIC32 logo, PolarFire, Prochip Designer, QTouch, SAM-BA, SenGenuity, SpyNIC, SST, SST Logo, SuperFlash, Symmetricom, SyncServer, Tachyon, TempTrackr, TimeSource, tinyAVR, UNI/O, Vectron, and XMEGA are registered trademarks of Microchip Technology Incorporated in the U.S.A. and other countries.

APT, ClockWorks, The Embedded Control Solutions Company, EtherSynch, FlashTec, Hyper Speed Control, HyperLight Load, IntelliMOS, Libero, motorBench, mTouch, Powermite 3, Precision Edge, ProASIC, ProASIC Plus, ProASIC Plus logo, Quiet-Wire, SmartFusion, SyncWorld, Temux, TimeCesium, TimeHub, TimePictra, TimeProvider, Vite, WinPath, and ZL are registered trademarks of Microchip Technology Incorporated in the U.S.A.

Adjacent Key Suppression, AKS, Analog-for-the-Digital Age, Any Capacitor, AnyIn, AnyOut, BlueSky, BodyCom, CodeGuard, CryptoAuthentication, CryptoAutomotive, CryptoCompanion, CryptoController, dsPICDEM, dsPICDEM.net, Dynamic Average Matching, DAM, ECAN, EtherGREEN, In-Circuit Serial Programming, ICSP, INICnet, Inter-Chip Connectivity, JitterBlocker, KleerNet, KleerNet logo, memBrain, Mindi, MiWi, MPASM, MPF, MPLAB Certified logo, MPLIB, MPLINK, MultiTRAK, NetDetach, Omniscient Code Generation, PICDEM, PICDEM.net, PICkit, PICtail, PowerSmart, PureSilicon, QMatrix, REAL ICE, Ripple Blocker, SAM-ICE, Serial Quad I/O, SMART-I.S., SQI, SuperSwitcher, SuperSwitcher II, Total Endurance, TSHARC, USBCheck, VariSense, ViewSpan, WiperLock, Wireless DNA, and ZENA are trademarks of Microchip Technology Incorporated in the U.S.A. and other countries.

SQTP is a service mark of Microchip Technology Incorporated in the U.S.A.

The Adaptec logo, Frequency on Demand, Silicon Storage Technology, and Symmcom are registered trademarks of Microchip Technology Inc. in other countries.

GestIC is a registered trademark of Microchip Technology Germany II GmbH & Co. KG, a subsidiary of Microchip Technology Inc., in other countries.

All other trademarks mentioned herein are property of their respective companies.

© 2019, Microchip Technology Incorporated, All Rights Reserved.

ISBN: 978-1-5224-4576-0

Worldwide Sales and Service

AMERICAS

Corporate Office
2355 West Chandler Blvd.
Chandler, AZ 85224-6199
Tel: 480-792-7200
Fax: 480-792-7277
Technical Support:
http://www.microchip.com/support
Web Address:
www.microchip.com

Atlanta
Duluth, GA
Tel: 678-957-9614
Fax: 678-957-1455

Austin, TX
Tel: 512-257-3370

Boston
Westborough, MA
Tel: 774-760-0087
Fax: 774-760-0088

Chicago
Itasca, IL
Tel: 630-285-0071
Fax: 630-285-0075

Dallas
Addison, TX
Tel: 972-818-7423
Fax: 972-818-2924

Detroit
Novi, MI
Tel: 248-848-4000

Houston, TX
Tel: 281-894-5983

Indianapolis
Noblesville, IN
Tel: 317-773-8323
Fax: 317-773-5453
Tel: 317-536-2380

Los Angeles
Mission Viejo, CA
Tel: 949-462-9523
Fax: 949-462-9608
Tel: 951-273-7800

Raleigh, NC
Tel: 919-844-7510

New York, NY
Tel: 631-435-6000

San Jose, CA
Tel: 408-735-9110
Tel: 408-436-4270

Canada - Toronto
Tel: 905-695-1980
Fax: 905-695-2078

ASIA/PACIFIC

Australia - Sydney
Tel: 61-2-9868-6733

China - Beijing
Tel: 86-10-8569-7000

China - Chengdu
Tel: 86-28-8665-5511

China - Chongqing
Tel: 86-23-8980-9588

China - Dongguan
Tel: 86-769-8702-9880

China - Guangzhou
Tel: 86-20-8755-8029

China - Hangzhou
Tel: 86-571-8792-8115

China - Hong Kong SAR
Tel: 852-2943-5100

China - Nanjing
Tel: 86-25-8473-2460

China - Qingdao
Tel: 86-532-8502-7355

China - Shanghai
Tel: 86-21-3326-8000

China - Shenyang
Tel: 86-24-2334-2829

China - Shenzhen
Tel: 86-755-8864-2200

China - Suzhou
Tel: 86-186-6233-1526

China - Wuhan
Tel: 86-27-5980-5300

China - Xian
Tel: 86-29-8833-7252

China - Xiamen
Tel: 86-592-2388138

China - Zhuhai
Tel: 86-756-3210040

ASIA/PACIFIC

India - Bangalore
Tel: 91-80-3090-4444

India - New Delhi
Tel: 91-11-4160-8631

India - Pune
Tel: 91-20-4121-0141

Japan - Osaka
Tel: 81-6-6152-7160

Japan - Tokyo
Tel: 81-3-6880- 3770

Korea - Daegu
Tel: 82-53-744-4301

Korea - Seoul
Tel: 82-2-554-7200

Malaysia - Kuala Lumpur
Tel: 60-3-7651-7906

Malaysia - Penang
Tel: 60-4-227-8870

Philippines - Manila
Tel: 63-2-634-9065

Singapore
Tel: 65-6334-8870

Taiwan - Hsin Chu
Tel: 886-3-577-8366

Taiwan - Kaohsiung
Tel: 886-7-213-7830

Taiwan - Taipei
Tel: 886-2-2508-8600

Thailand - Bangkok
Tel: 66-2-694-1351

Vietnam - Ho Chi Minh
Tel: 84-28-5448-2100

EUROPE

Austria - Wels
Tel: 43-7242-2244-39
Fax: 43-7242-2244-393

Denmark - Copenhagen
Tel: 45-4450-2828
Fax: 45-4485-2829

Finland - Espoo
Tel: 358-9-4520-820

France - Paris
Tel: 33-1-69-53-63-20
Fax: 33-1-69-30-90-79

Germany - Garching
Tel: 49-8931-9700

Germany - Haan
Tel: 49-2129-3766400

Germany - Heilbronn
Tel: 49-7131-72400

Germany - Karlsruhe
Tel: 49-721-625370

Germany - Munich
Tel: 49-89-627-144-0
Fax: 49-89-627-144-44

Germany - Rosenheim
Tel: 49-8031-354-560

Israel - Ra'anana
Tel: 972-9-744-7705

Italy - Milan
Tel: 39-0331-742611
Fax: 39-0331-466781

Italy - Padova
Tel: 39-049-7625286

Netherlands - Drunen
Tel: 31-416-690399
Fax: 31-416-690340

Norway - Trondheim
Tel: 47-7288-4388

Poland - Warsaw
Tel: 48-22-3325737

Romania - Bucharest
Tel: 40-21-407-87-50

Spain - Madrid
Tel: 34-91-708-08-90
Fax: 34-91-708-08-91

Sweden - Gothenberg
Tel: 46-31-704-60-40

Sweden - Stockholm
Tel: 46-8-5090-4654

UK - Wokingham
Tel: 44-118-921-5800
Fax: 44-118-921-5820

© 2019 Microchip Technology Inc.