

MCP3421
Weight Scale Demo Board
User's Guide

© 2010 Microchip Technology Inc.

Note the following details of the code protection feature on Microchip devices:

- Microchip products meet the specification contained in their particular Microchip Data Sheet.
- Microchip believes that its family of products is one of the most secure families of its kind on the market today, when used in the intended manner and under normal conditions.
- There are dishonest and possibly illegal methods used to breach the code protection feature. All of these methods, to our knowledge, require using the Microchip products in a manner outside the operating specifications contained in Microchip's Data Sheets. Most likely, the person doing so is engaged in theft of intellectual property.
- Microchip is willing to work with the customer who is concerned about the integrity of their code.
- Neither Microchip nor any other semiconductor manufacturer can guarantee the security of their code. Code protection does not mean that we are guaranteeing the product as "unbreakable."

Code protection is constantly evolving. We at Microchip are committed to continuously improving the code protection features of our products. Attempts to break Microchip's code protection feature may be a violation of the Digital Millennium Copyright Act. If such acts allow unauthorized access to your software or other copyrighted work, you may have a right to sue for relief under that Act.

Information contained in this publication regarding device applications and the like is provided only for your convenience and may be superseded by updates. It is your responsibility to ensure that your application meets with your specifications. MICROCHIP MAKES NO REPRESENTATIONS OR WARRANTIES OF ANY KIND WHETHER EXPRESS OR IMPLIED, WRITTEN OR ORAL, STATUTORY OR OTHERWISE, RELATED TO THE INFORMATION, INCLUDING BUT NOT LIMITED TO ITS CONDITION, QUALITY, PERFORMANCE, MERCHANTABILITY OR FITNESS FOR PURPOSE**.** Microchip disclaims all liability arising from this information and its use. Use of Microchip devices in life support and/or safety applications is entirely at the buyer's risk, and the buyer agrees to defend, indemnify and hold harmless Microchip from any and all damages, claims, suits, or expenses resulting from such use. No licenses are conveyed, implicitly or otherwise, under any Microchip intellectual property rights.

Trademarks

The Microchip name and logo, the Microchip logo, dsPIC, KEELOQ, KEELOQ logo, MPLAB, PIC, PICmicro, PICSTART, PIC^{32} logo, rfPIC and UNI/O are registered trademarks of Microchip Technology Incorporated in the U.S.A. and other countries.

FilterLab, Hampshire, HI-TECH C, Linear Active Thermistor, MXDEV, MXLAB, SEEVAL and The Embedded Control Solutions Company are registered trademarks of Microchip Technology Incorporated in the U.S.A.

Analog-for-the-Digital Age, Application Maestro, CodeGuard, dsPICDEM, dsPICDEM.net, dsPICworks, dsSPEAK, ECAN, ECONOMONITOR, FanSense, HI-TIDE, In-Circuit Serial Programming, ICSP, Mindi, MiWi, MPASM, MPLAB Certified logo, MPLIB, MPLINK, mTouch, Octopus, Omniscient Code Generation, PICC, PICC-18, PICDEM, PICDEM.net, PICkit, PICtail, REAL ICE, rfLAB, Select Mode, Total Endurance, TSHARC, UniWinDriver, WiperLock and ZENA are trademarks of Microchip Technology Incorporated in the U.S.A. and other countries.

SQTP is a service mark of Microchip Technology Incorporated in the U.S.A.

All other trademarks mentioned herein are property of their respective companies.

© 2010, Microchip Technology Incorporated, Printed in the U.S.A., All Rights Reserved.

Printed on recycled paper.

ISBN: 978-1-60932-687-6

QUALITY MANAGEMENT SYSTEM
CERTIFIED BY DNV
ISO/TS 16949:2002

Microchip received ISO/TS-16949:2002 certification for its worldwide headquarters, design and wafer fabrication facilities in Chandler and Tempe, Arizona; Gresham, Oregon and design centers in California and India. The Company's quality system processes and procedures are for its PIC® MCUs and dsPIC® DSCs, KEELOQ® code hopping devices, Serial EEPROMs, microperipherals, nonvolatile memory and analog products. In addition, Microchip's quality system for the design and manufacture of development systems is ISO 9001:2000 certified.

© 2010 Microchip Technology Inc.

MCP3421 WEIGHT SCALE DEMO BOARD USER'S GUIDE

Table of Contents

Preface 5

Chapter 1. Product Overview

1.1 Overview 9
1.2 Analog Input Configuration Options 10
1.3 Load Cell 11
1.4 Universal Serial Bus (USB) and PIC18F4550 Microcontroller 12
1.5 What the MCP3421 Weight Scale Kit Contains 12

Chapter 2. Installation and Operation

2.1 MCP3421 Configuration Bit Settings and Data Acquisition 13
2.2 USB Communication 13

Chapter 3. Weight Scale PC Software Tool

3.1 Software Installation 15
3.2 Software Overview 15
3.3 Weight Scale Calibration 16

Appendix A. Schematics and Layouts

A.1 Introduction 17
A.2 Board – Schematic 18
A.3 Board – Top Copper and Pads 19
A.4 Board – Top Pads and Silk 20
A.5 Board – Top Copper, Pads and Silk 21
A.6 Board – Bottom Copper and Pads 22

Appendix B. Bill of Materials

Worldwide Sales and Service 26

© 2010 Microchip Technology Inc.

NOTES:

© 2010 Microchip Technology Inc.

Preface

NOTICE TO CUSTOMERS

All documentation becomes dated, and this manual is no exception. Microchip tools and documentation are constantly evolving to meet customer needs, so some actual dialogs and/or tool descriptions may differ from those in this document. Please refer to our web site (www.microchip.com) to obtain the latest documentation available.

Documents are identified with a "DS" number. This number is located on the bottom of each page, in front of the page number. The numbering convention for the DS number is "DSXXXXXA", where "XXXXX" is the document number and "A" is the revision level of the document.

For the most up-to-date information on development tools, see the MPLAB® IDE online help. Select the Help menu, and then Topics to open a list of available on-line help files.

INTRODUCTION

This chapter contains general information that will be useful to know before using the MCP3421 Weight Scale Demo Board. Items discussed in this chapter include:

- Document Layout
- Conventions Used in this Guide
- Recommended Reading
- The Microchip Web Site
- Customer Support
- Document Revision History

DOCUMENT LAYOUT

This document describes how to use the MCP3421 Weight Scale Demo Board as a development tool to emulate and debug firmware on a target board. The manual layout is as follows:

- **Chapter 1. "Product Overview"** – Provides important information about the MCP3421 Weight Scale Demo Board hardware.
- **Chapter 2. "Installation and Operation"** – Describes the MCP3421 Weight Scale Demo Board firmware.
- **Chapter 3. "Weight Scale PC Software Tool"** – Provides detailed information about the board's PC software tool.
- **Appendix A. "Schematics and Layouts"** – Shows the schematic and board layouts for the MCP3421 Weight Scale Demo Board.
- **Appendix B. "Bill of Materials"** – Lists the parts used to build the MCP3421 Weight Scale Demo Board.

CONVENTIONS USED IN THIS GUIDE

This manual uses the following documentation conventions:

DOCUMENTATION CONVENTIONS

Description	Represents	Examples
Arial font:		
Italic characters	Referenced books	*MPLAB® IDE User's Guide*
	Emphasized text	...is the *only* compiler...
Initial caps	A window	the Output window
	A dialog	the Settings dialog
	A menu selection	select Enable Programmer
Quotes	A field name in a window or dialog	"Save project before build"
Underlined, italic text with right angle bracket	A menu path	*File>Save*
Bold characters	A dialog button	Click **OK**
	A tab	Click the **Power** tab
N'Rnnnn	A number in verilog format, where N is the total number of digits, R is the radix and n is a digit.	4'b0010, 2'hF1
Text in angle brackets < >	A key on the keyboard	Press <Enter>, <F1>
Courier New font:		
Plain Courier New	Sample source code	`#define START`
	Filenames	`autoexec.bat`
	File paths	`c:\mcc18\h`
	Keywords	`_asm, _endasm, static`
	Command-line options	`-Opa+, -Opa-`
	Bit values	`0, 1`
	Constants	`0xFF, 'A'`
Italic Courier New	A variable argument	*`file`*`.o`, where *`file`* can be any valid filename
Square brackets [ ]	Optional arguments	`mcc18 [options]` *`file`* `[options]`
Curly brackets and pipe character: { | }	Choice of mutually exclusive arguments; an OR selection	`errorlevel {0|1}`
Ellipses...	Replaces repeated text	`var_name [, var_name...]`
	Represents code supplied by user	`void main (void) { ... }`

© 2010 Microchip Technology Inc.

RECOMMENDED READING

This user's guide describes how to use MCP3421 Weight Scale Demo Board. Other useful documents are listed below. The following Microchip documents are available and recommended as supplemental reference resources:

- **MCP3421 Data Sheet – 18-Bit Analog-to-Digital Converter with I²C™ Interface and On-Board Reference (DS22003)**
- **MCP3422/3/4 Data Sheet – 18-Bit, Multi-Channel ΔΣ Analog-to-Digital Converter with I²C™ Interface and On-Board Reference (DS22088)**
- **MCP6V07 Data Sheet – 300 µA, Auto-Zeroed Op Amps (DS22093)**
- **PIC18F4550 Data Sheet – 28/40/44-Pin, High-Performance, Enhanced Flash, USB Microcontrollers with nanoWatt Technology (DS39632)**
- **AN1030 – Weigh Scale Applications for the MCP3551 (DS01030)**

THE MICROCHIP WEB SITE

Microchip provides online support via our web site at www.microchip.com. This web site is used as a means to make files and information easily available to customers. Accessible by using your favorite Internet browser, the web site contains the following information:

- **Product Support** – Data sheets and errata, application notes and sample programs, design resources, user's guides and hardware support documents, latest software releases and archived software
- **General Technical Support** – Frequently Asked Questions (FAQs), technical support requests, online discussion groups, Microchip consultant program member listing
- **Business of Microchip** – Product selector and ordering guides, latest Microchip press releases, listing of seminars and events, listings of Microchip sales offices, distributors and factory representatives

CUSTOMER SUPPORT

Users of Microchip products can receive assistance through several channels:

- Distributor or Representative
- Local Sales Office
- Field Application Engineer (FAE)
- Technical Support

Customers should contact their distributor, representative or field application engineer (FAE) for support. Local sales offices are also available to help customers. A listing of sales offices and locations is included in the back of this document.

Technical support is available through the web site at: http://support.microchip.com.

DOCUMENT REVISION HISTORY

Revision A (November 2010)

- Initial Release of this Document.

NOTES:

© 2010 Microchip Technology Inc.

Chapter 1. Product Overview

1.1 OVERVIEW

The MCP3421 Weight Scale Demo Board works with the LabVIEW™ Graphical User Interface (GUI) PC Software. This demo board demonstrates how to use the MCP3421 18-bit Delta-Sigma ADC for weight scale applications. It uses the PIC18F4550 microcontroller for data processing and USB communication with PC. This board also demonstrates the changes in the system performance by adjusting the parameters of the sensor signal conditioning circuits using the MCP6V07 auto-zeroed op amp.

1.1.1 Feature Highlights

- The LCD displays the user's selected option and the ADC output code or the calculated results.
- The user can select the signal averaging factor (1 or 4) by pressing the **S3** button. The selected option is displayed on the LCD.
- System performance analysis using PC GUI: the interface allows various interactive post signal processing, such as standard deviations and histogram.
- Hardware PCB design examples: this demo board utilizes a robust grounding method of analog circuits in PCB design. It also demonstrates how to split analog and digital ground planes.
- Signal conditioning examples using MCP6V07: the low-noise op amp is used to boost input signal levels.
- 2 Kg load cell with 1 mV/V sensitivity.



FIGURE 1-1: *MCP3421 Weight Scale Demo Board.*

1.2 ANALOG INPUT CONFIGURATION OPTIONS

The MCP3421 Weight Scale Demo Board has an MCP6V07 auto-zeroed op amp, to investigate different signal conditioning configuration.

As shown in Figure 1-2, the user can configure the input signal chain with the following three options, combining the jumpers:

a) Bypassing the MCP6V07: the MCP3421 input pins are directly connected to the sensor output. In this case, the PGA of the MCP3421 is set to a gain of 8. The jumpers must be set as follows: J4 and J5 are on the left position. J10 and J13 are ON, while J8, J9, J11 and J12 are OFF (see Figure 1-3a).

b) Extra gain is added by the low-noise, auto-zeroed op amp MCP6V07, before the ADC. The added gain is 50x, and the ADC's PGA is 2x. For this option the jumpers must be set as follows: J4 and J5 are on the right position; J9, J11 and J12 are ON, while J8, J10 and J13 are OFF (see Figure 1-3b).

c) PGA = 1x, but uses the MCP6V07 to add high gain. Extra gain is added by the low-noise, auto-zeroed op amp MCP6V07, before the ADC. The added gain is 250x, and the ADC's PGA is 1x. For this option the jumpers must be set as follows: J4 and J5 are on the right position; J8, J11 and J12 are ON, while J9, J10 and J13 are OFF (see Figure 1-3c).

d) Table 1-1 shows the jumper positions and their results.

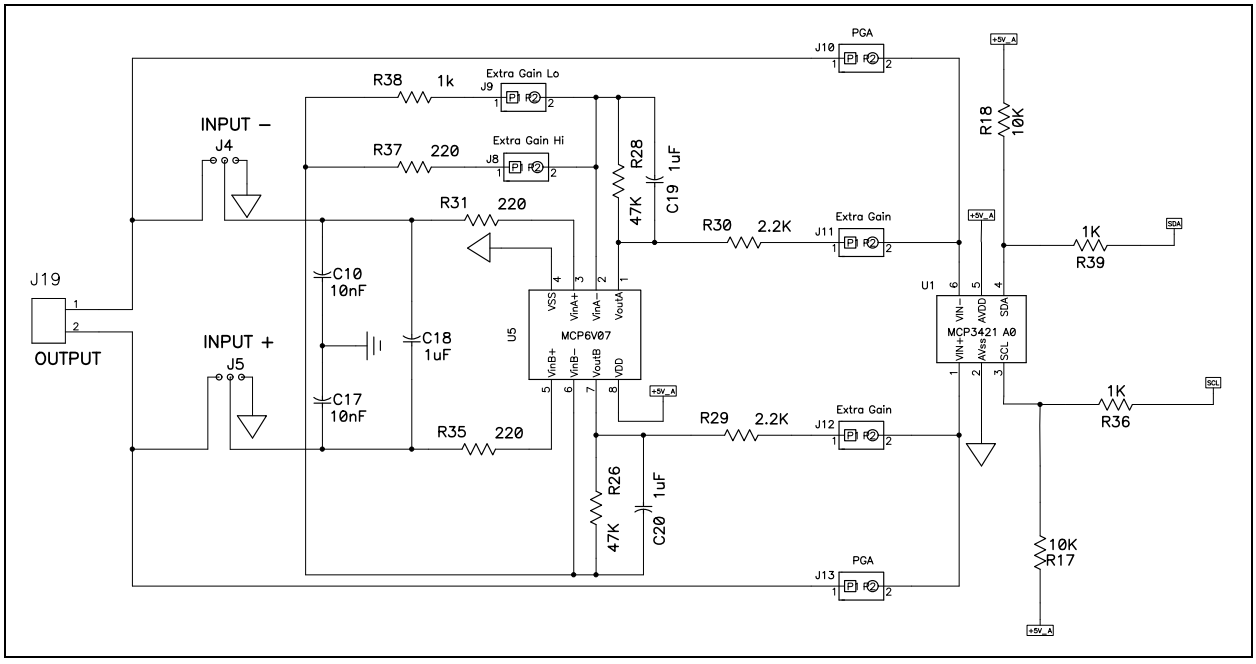

FIGURE 1-2: *Signal Conditioning and ADC on the MCP3421 Weight Scale Demo Board.*

© 2010 Microchip Technology Inc.

TABLE 1-1: JUMPERS POSITIONS VS. FUNCTION

Symbol	Jumpers Positions	Function
xPGA(1)	J4 and J5 connected to J19 J10 and J13 are ON J8, J9, J11 and J12 are disconnected (Figure 1-3a)	This combination evaluates the ADC performance. The on-board op amp is bypassed.
xGLo(1)	J4 and J5 connected to GND J9, J11 and J12 are ON J8, J10 and J13 are disconnected (Figure 1-3b)	This combination evaluates the influence of the extra gain added by the MCP6V07 device.
xGHi(1)	J4 and J5 connected to GND J8, J11 and J12 are ON J9, J10 and J13 are disconnected (Figure 1-3c)	This combination evaluates the influence of the extra gain added by the MCP6V07 device, but with higher extra gain.

Note 1: x indicates the selected averaging factor (1 or 4).

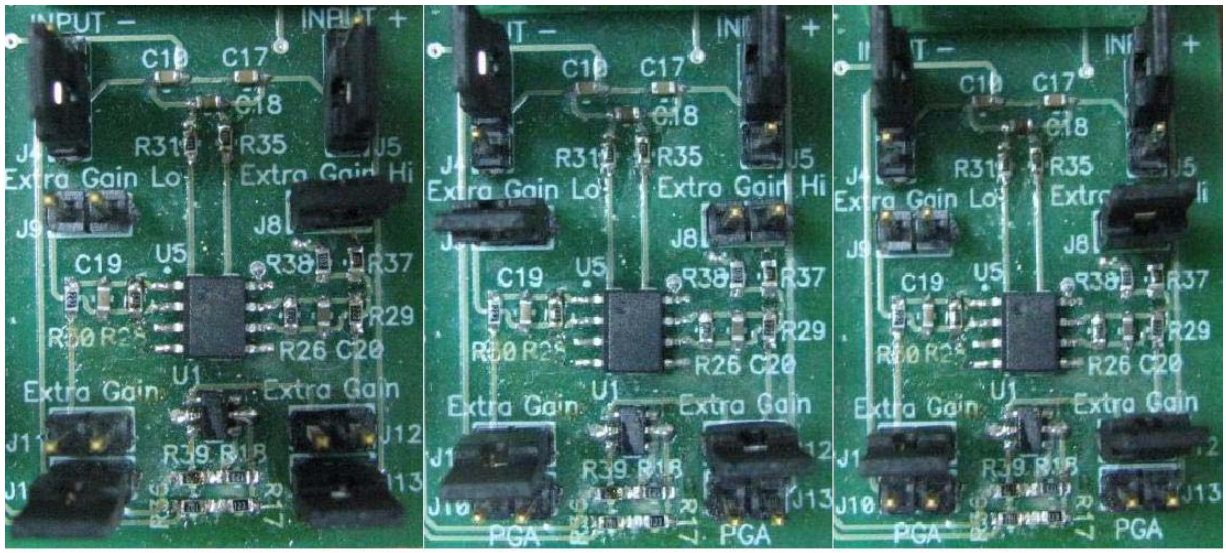

FIGURE 1-3: *Gain Selection Options on MCP3421 Weight Scale Demo Board.*

1.3 LOAD CELL

The MCP3421 device with a maximum PGA gain setting (8x) can detect an input signal level as low as 2 µV. Therefore, it can detect the input with an accuracy of 1g. When measuring such a low input signal level, to control the noise level at the input pins is very important. Therefore, using low-noise op amp at the signal conditioning circuit is necessary. In this demo board, MCP6V07 auto-zeroed op amp is used. This op amp has the offset voltage less than ±2 µV, and drifts less than ±50 nV/C.

Additional improvement in signal-to-noise ratio can be achieved by doing more averaging in digital domain. The user can tell the difference by selecting the data average options 1 or 4. The results are shown in the PC GUI.

Note: This demo board uses a low-cost load cell for demonstration purposes. The load cell can measure up to 2 Kg with 1 mV/V sensitivity. The load cell output is connected to the demo board PCB through J18 and J19 connectors. The user can also connect their own load cell instead.

1.4 UNIVERSAL SERIAL BUS (USB) AND PIC18F4550 MICROCONTROLLER

The MCP3421 Weight Scale Demo Board has a USB connector to communicate with the PC GUI. The PC GUI allows various user options, such as calibrations and performance evaluation of the system.

The USB communication with the PC is done by the on-board microcontroller. PIC18F4550 is also communicating with the ADC, and controls the LCD.

The four button switches on the board have the following functions:

- **S5** is the Reset pin
- **S2** is used to change the LCD indication from "Weight" to "ADC code", "ADC output", or "Calibration"
- **S3** is used in parallel with the configuration of the signal conditioning chain. By pressing this button, the LCD indication will change from 1PGA to 1GLo, 1GHi, 4PGA, 4GLo or 4GHi. PGA means that the ADCs PGA only is used at highest gain. GLo means that the external op amp is being used with low gain, GHi means that external op amp is used with high gain. The 1 and 4 before the letters indicate the numbers of averages – no averaging, or averaging on four samples
- **S4** is doing the zero calibration. By pressing this button, the "Weight" indication will go to a value closer to 0g.

1.5 WHAT THE MCP3421 WEIGHT SCALE KIT CONTAINS

The MCP3421 Weight Scale Demo Board kit includes:

- MCP3421 Weight Scale Demo Board, 102-00250
- Important Information Sheet

© 2010 Microchip Technology Inc.

Chapter 2. Installation and Operation

2.1 MCP3421 CONFIGURATION BIT SETTINGS AND DATA ACQUISITION

The communication with the ADC is done through I^2C, but the I^2C peripheral port of the MCU is not being used. Instead, two pins (RA4, RA5) are being controlled from the firmware.

The MCU is changing the setup of the ADC each time S3 is pressed, to change the PGA gain: 8x for PGA, 2x for GLo and 1x for GHi. The ADC always operates in 18-bit mode.

The data received from the MCP3421 device is scaled to a value expressed in grams by the `compute()` function, in order to be displayed on the LCD.

There are two calibration steps: offset subtraction and gain scaling. The two values, the offset and the gain constants, are stored in EEPROM during the calibration, and read out at Reset, or when the S3 is pressed.

2.2 USB COMMUNICATION

The Microchip USB Firmware Framework is a software library developed by Microchip Technology Inc., that can be used to create new USB applications. It can be considered as a reference design project, containing the necessary firmware code for USB operation, also providing a placeholder for user's code. The whole code project is contained within one single root project directory, with many subdirectories for source code organization.

Microchip provides a general purpose Windows® driver which can be used with Windows applications, to interface with a custom class USB device. The driver will not be used in all USB applications, one of the exceptions being the USB HID class devices, which would normally use built-in HID class drivers distributed with the OS.

For USB applications that do not easily fit within the constraints of these other device class options, Microchip's general purpose driver may be used. Windows applications can access the USB devices either by directly interfacing with the driver (`mchpusb.sys`), or indirectly use the driver through a pre-compiled library.

A custom class Windows application using the Microchip general purpose USB driver may interface directly with the driver (`mchpusb.sys`). By doing so, it requires more effort and more learning time than using a pre-compiled library that exposes a simple to use API, including basic functions like `open()`, `read()`, `write()` and `close()`.

The `MPUSBAPI.DLL` file is a library which provides a number of functions, including the basic ones needed for reading and writing to an USB device. A list of the functions available and the calling conventions for those functions is currently documented in the form of in-line comments in the source code for the DLL file. The DLL is compiled using Borland® C++ Builder™ 6 development environment, and the source code is provided in the *<System Driver>:\MCHPFSUSB\Pc\Mpusbapi\Dll\Borland C\Source* directory.

A load time linking and a run time linking example, showing how to use the DLL, are included in the *System Driver:\MCHPFSUSB\Pc\Mpusbapi\Example Applications* directory.

Note: For running this project, the USB Microchip Stack must be installed on the user's machine.

The MCP3421 Weight Scale Demo Board firmware is mainly based on the USB stack example: "Device – MCHPUSB – Generic Driver Demo". Most of the firmware changes of the MPLAB MCP3421 Weight Scale Demo Board project are done in the *user v7 eeprom.c* file. This project is downloadable from Microchip's MCP3421 product page web site: http://www.microchip.com/wwwproducts/Devices.aspx?dDoc-Name=en520011.

The input offset error voltage is computed when S4 is being pressed. The gain constant is computed by the PC software and transmitted to the MCU via USB on the `OUTPacket._byte[2]` to `OUTPacket._byte[7]`.

The weight scale is sending to the PC software the following values: weight, ADC code, ADC output, zero calibration and gain calibration, represented by six characters using `INPacket._byte[0]` to `INPacket._byte[31]`.

© 2010 Microchip Technology Inc.

Chapter 3. Weight Scale PC Software Tool

3.1 SOFTWARE INSTALLATION

The Weight Scale PC software is an executable file that does not require installation. But, to enable running the software, the user must first install two additional programs, in the following order:

- NI LabVIEW Run-Time Engine
- NI-VISA Run-Time Engine

These programs can be downloaded from www.ni.com.

3.2 SOFTWARE OVERVIEW

The MCP3421 Weight Scale Demo Board includes a PC graphical user interface (GUI), that can be used to evaluate the weight scale accuracy and weight scale calibration.

This board is communicating with the software via USB port.

The following figure shows a sample of the software's GUI in Measurement mode:

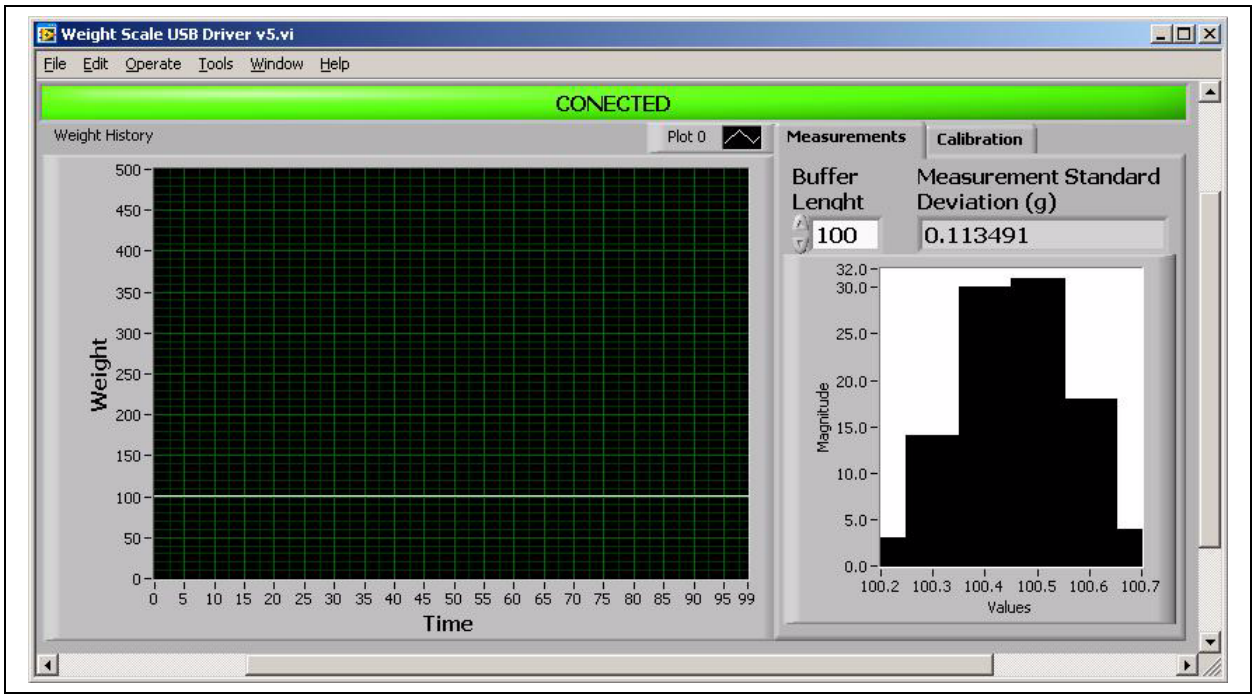

FIGURE 3-1: *MCP3421 Weight Scale Demo Board Software – Measurement Mode.*

The user can control the size of the X axis by writing the desired figure in buffer length. Several series of statistical analysis are performed on this buffer, the most important being displayed on the screen, under the Measurement Standard Deviation. This deviation is measured in grams and represents the RMS noise value of the weight scale. The actual accuracy of the weight scale can be defined in many ways, but most commonly it is 10 times the standard deviation.

3.3 WEIGHT SCALE CALIBRATION

The MCP3421 Weight Scale Demo Board requires a two points calibration: one at 0g, to remove the weight scale offset, and another at a known point, for gain calibration.

To perform the complete weight scale calibration the user must follow the next steps:

1. Connect the weight scale to the PC and run the software.
2. Press **S3** button to select the desired option (xPGA, xGLo or xGHi).
3. Press **S4** to remove the offset. The weight indication does not reach 0 in all cases. This is a normal behavior, since calibration is not completed at this step.
4. Place a known weight on the scale's platform.
5. Write the weight value in the "Calibration Weight (g)" field on the GUI.
6. Press **Calibrate** button from the GUI, or F4 on the keyboard. This last step will perform the gain calibration.

The offset calibration may be required more often than the gain calibration, for precision reasons. Once the complete weight scale calibration done, the offset calibration can be performed at any time, by pressing **S4**.

It is important to perform complete calibrations for all six signal conditioning options. The calibration constants are being stored in the MCU EEPROM.

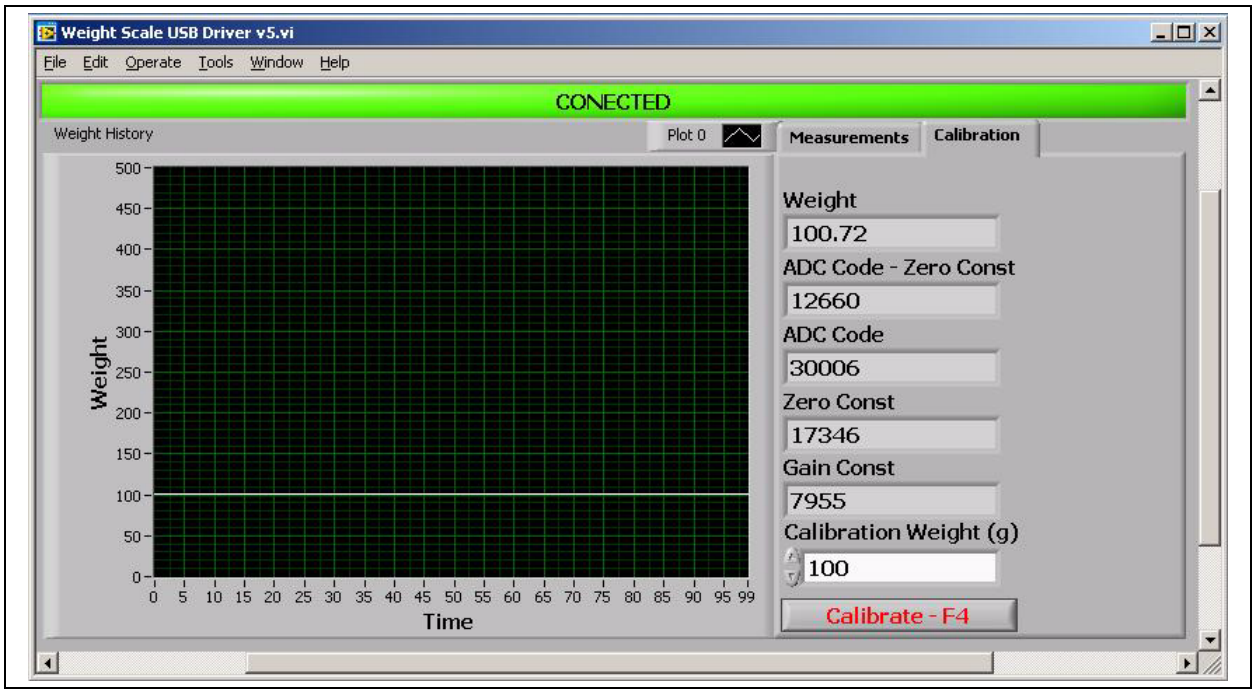

FIGURE 3-2: *MCP3421 Weight Scale Demo Board Software – Calibration mode.*

© 2010 Microchip Technology Inc.

Appendix A. Schematics and Layouts

A.1 INTRODUCTION

This appendix contains the following schematics and layouts for the MCP3421 Weight Scale Demo Board:

- Board – Schematic
- Board – Top Copper and Pads
- Board – Top Pads and Silk
- Board – Top Copper, Pads and Silk
- Board – Bottom Copper and Pads

A.2 BOARD – SCHEMATIC

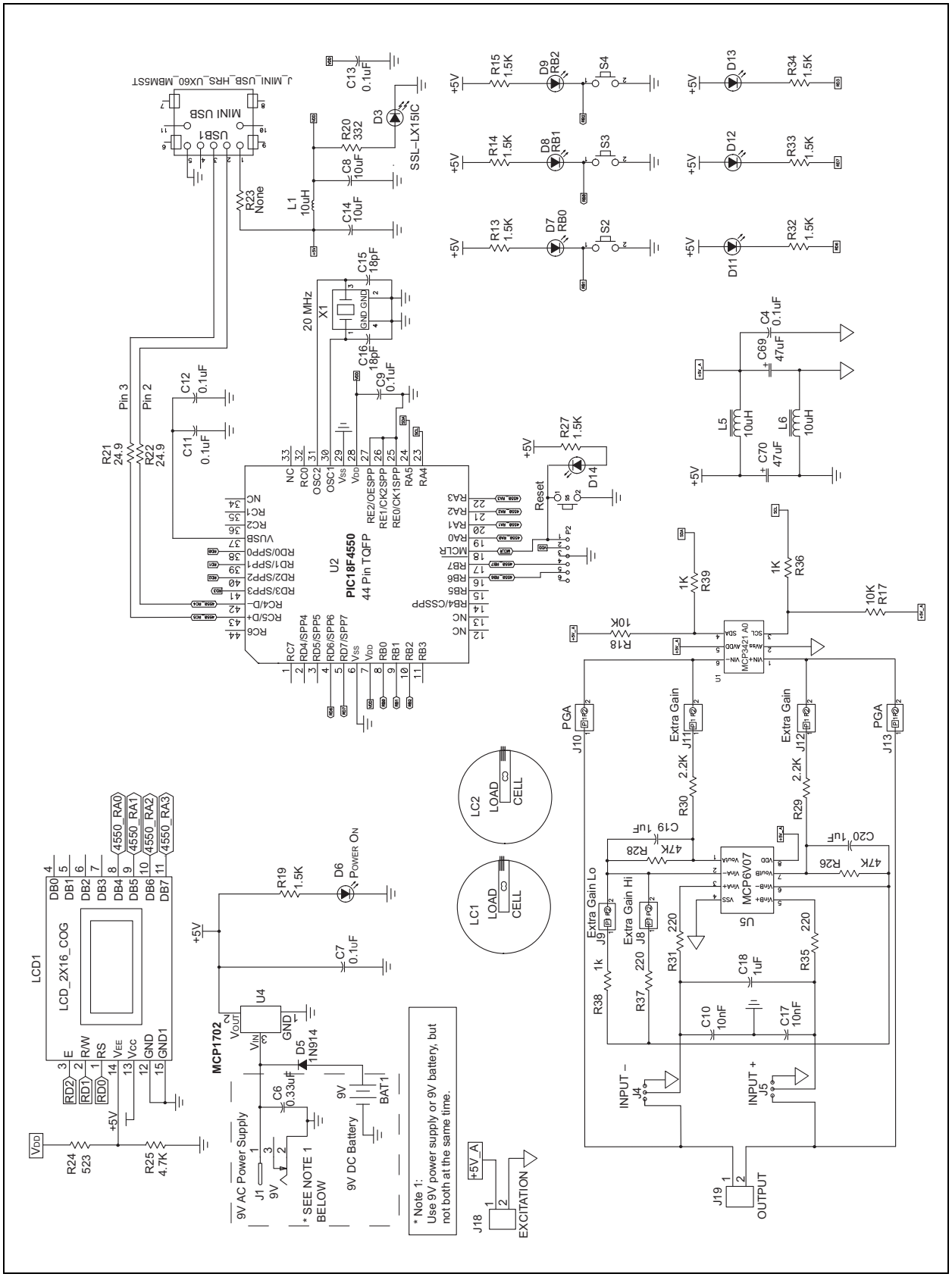

© 2010 Microchip Technology Inc.

A.3 BOARD – TOP COPPER AND PADS

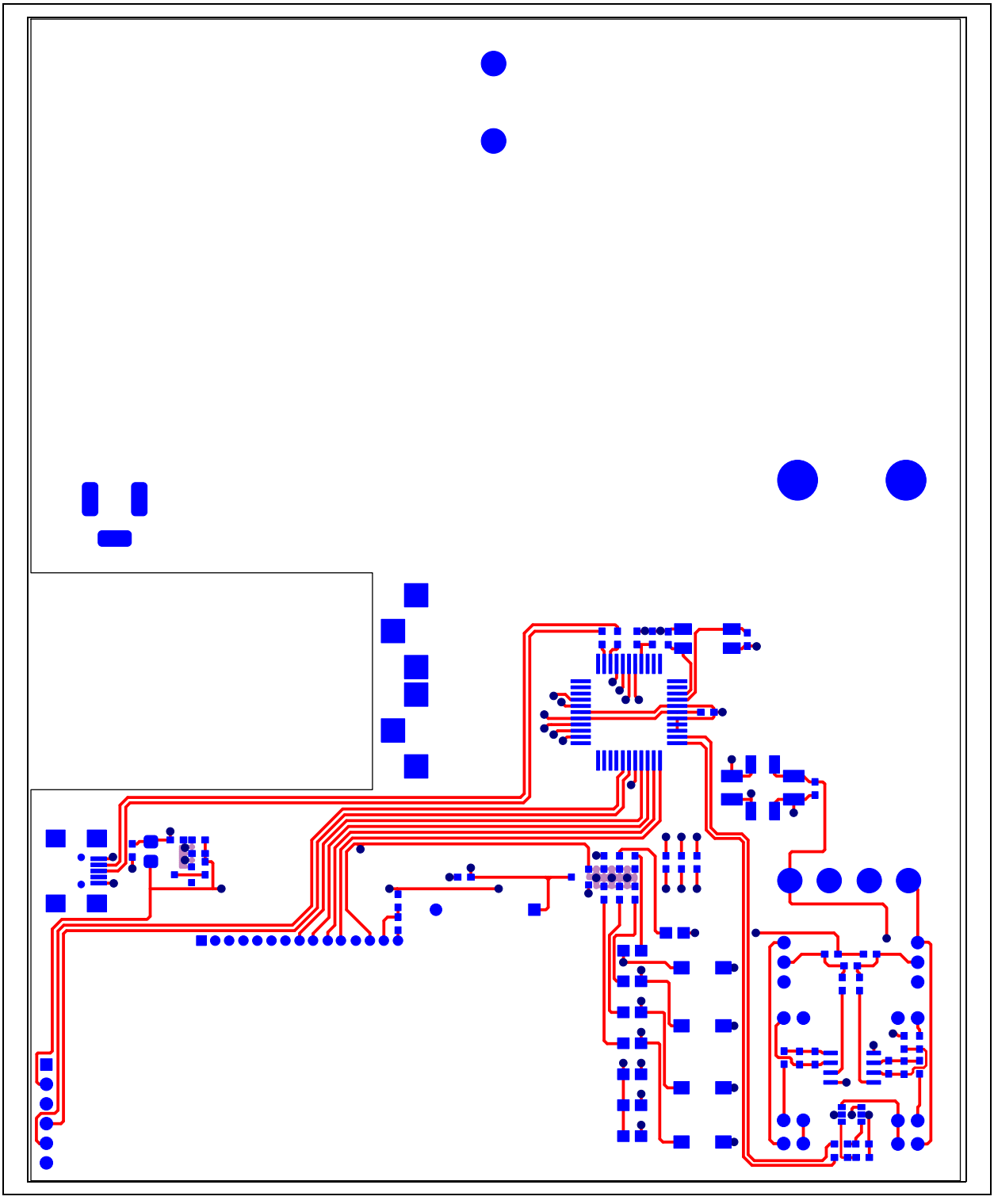

A.4 BOARD – TOP PADS AND SILK

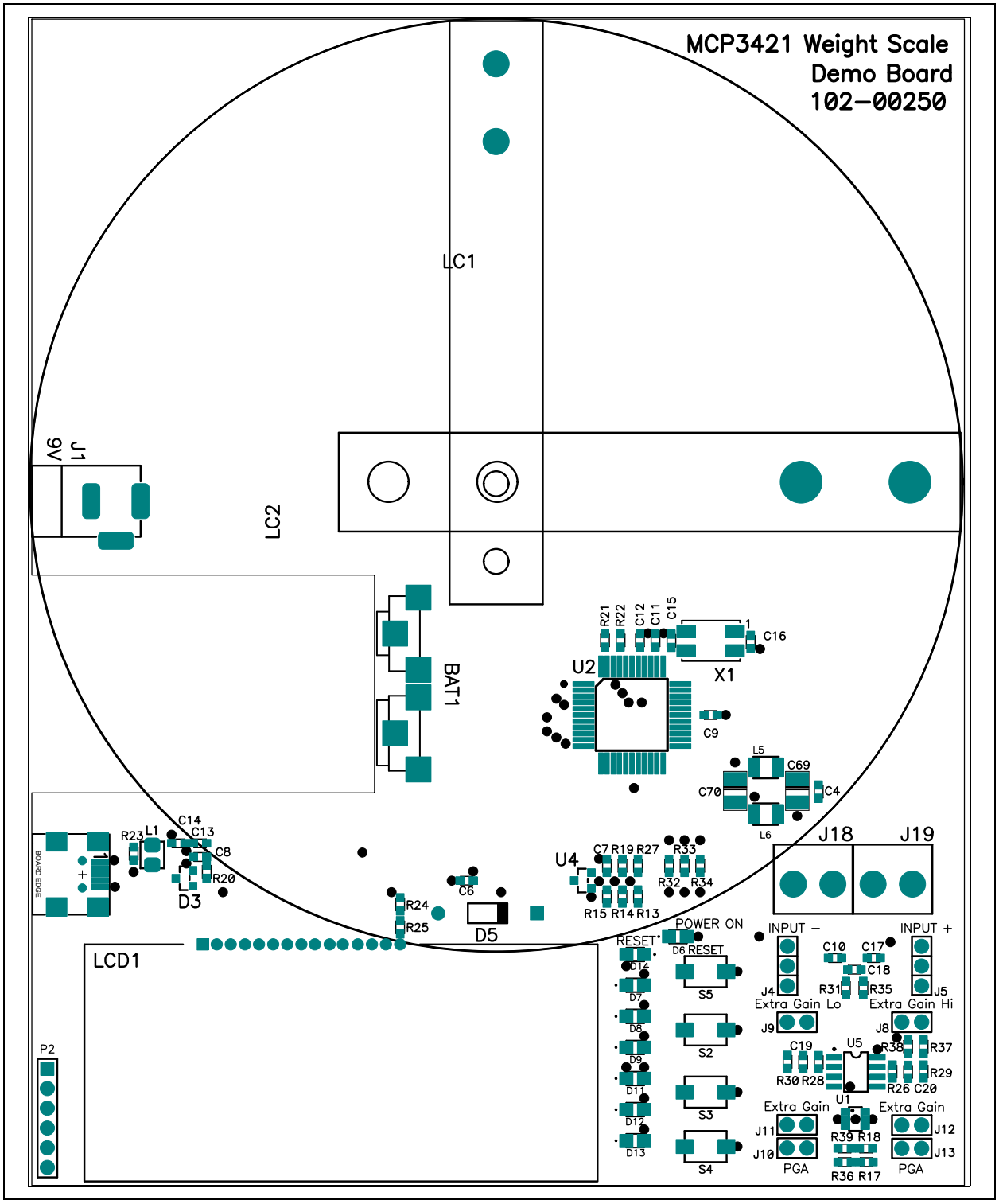

© 2010 Microchip Technology Inc.

A.5 BOARD – TOP COPPER, PADS AND SILK

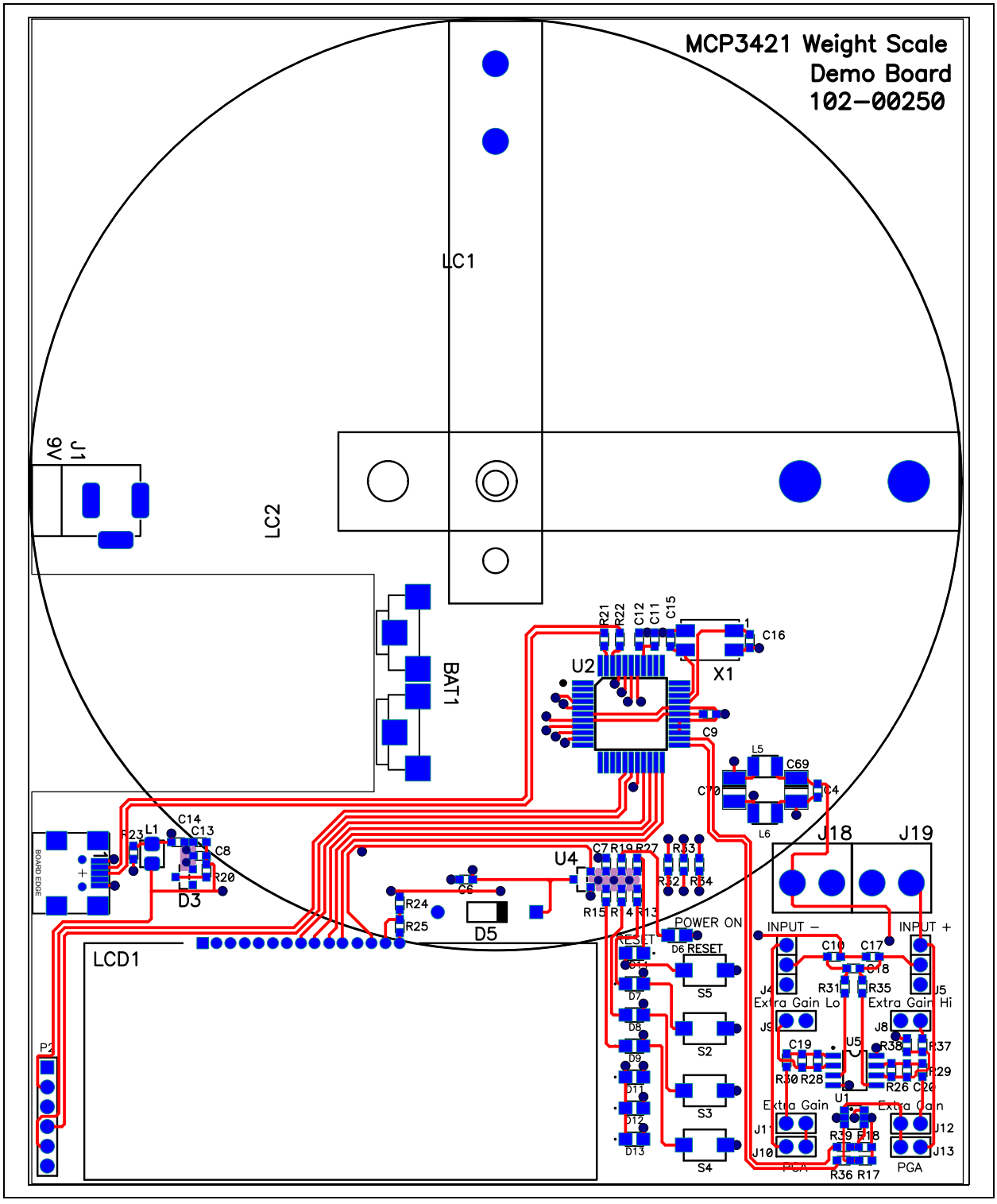

A.6 BOARD – BOTTOM COPPER AND PADS

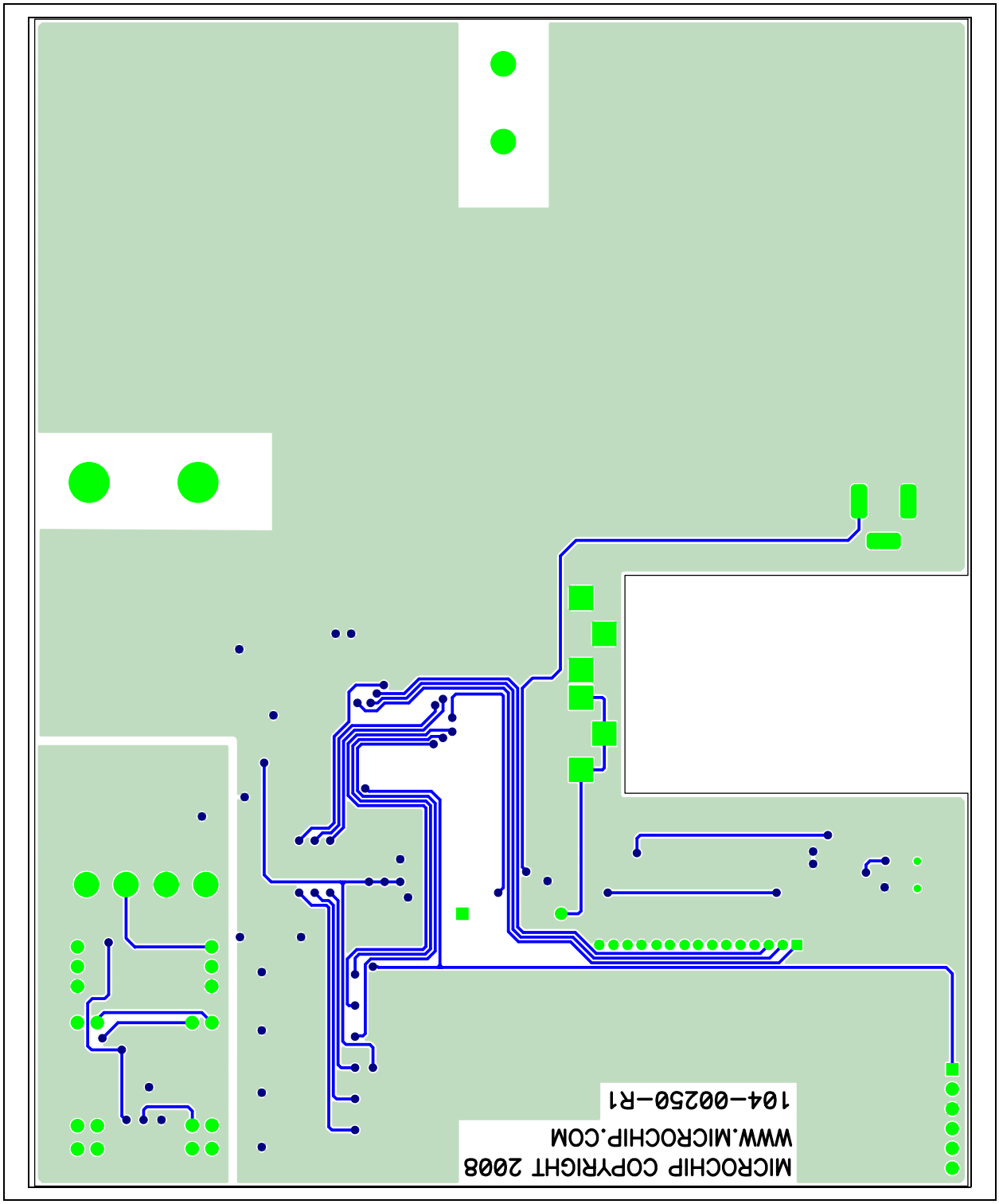

© 2010 Microchip Technology Inc.

Appendix B. Bill of Materials

TABLE B-1: BILL OF MATERIALS (BOM)

Qty	Reference	Description	Manufacturer	Part Number
6	C4, C7, C9, C11, C12, C13	CAP X2Y CER .1UF X7R 6.3V 0603	Johanson Dielectrics Inc	6R3X14W104MV4T
1	C6	CAP .33UF 6.3V CERAMIC X5R 0603	Panasonic® – ECG	ECJ-1VB0J334K
2	C8, C14	CAP CER 10UF 6.3V X5R 0603	Murata Manufacturing Co., Ltd.	GRM188R60J106ME47D
2	C10, C17	CAP CER 10000PF 50V 10% X7R 0603	Murata Manufacturing Co., Ltd.	GRM188R71H103KA01D
2	C15, C16	CAP CER 18PF 50V 5% C0G 0603	Murata Manufacturing Co., Ltd.	GRM1885C1H180JA01D
3	C18, C19, C20	CAP CER 1.0UF 6.3V 10% X5R 0603	Murata Manufacturing Co., Ltd.	GRM188R60J105KA01D
2	C69, C70	CAP TANTALUM 47UF 6.3V 10% SMD	Kemet	B45196H1476K209
1	D3	DO NOT POPULATE	—	—
1	D5	DIODE SS HI COND100V 200MA DO-35	Fairchild Semiconductor Inc.	1N914BTR
4	D6, D7, D8, D9, D11, D12, D13, D14,	LED GREEN CLEAR THIN 0805 SMD	Lite-On®, Inc.	LTST-C171GKT
1	J1	CONN POWERJACK MINI .08" R/A T/H	Switchcraft®, Inc.	RAPC722X
2	J4, J5	CONN HEADER VERT 2POS .100 TIN	Tyco Electronics	3-644695-3
6	J8, J9, J10, J11, J12, J13	CONN HEADER VERT 2POS .100 TIN	Tyco Electronics	3-644695-2
2	J18, J19	CONN TERM BLOCK 2.54MM 2POS	Phoenix Contact	1725656
2	L5, L6	INDUCTOR 10UH 450MA 1210	Murata Manufacturing Co., Ltd.	LQH32CN100K53L
1	LC1	DO NOT POPULATE	—	—
1	LC2	Load cell AMA–2kg	Xiamen Kuanyi Electronic Technology Co., Ltd.	AMA-2
1	LCD1	16X2 LCD Character Display	Fema Electronics Corporation	CG1626-SGR1
1	P2	6way pins MCU programming	Tyco Electronics	3-644456-6
1	PCB	RoHS Compliant Bare PCB, MCP3421 Weight Scale Demo Board	—	104-00250

Note 1: The components listed in this Bill of Materials are representative of the PCB assembly. The released BOM used in manufacturing uses all RoHS-compliant components.

TABLE B-1: BILL OF MATERIALS (BOM) (CONTINUED)

Qty	Reference	Description	Manufacturer	Part Number
8	R13, R14, R15, R19, R27, R32, R33, R34	RES 1.50K OHM 1/10W 1% 0603 SMD	Yageo Corporation	RC0603FR-071K5L
2	R17, R18	RES 10.0K OHM 1/10W 1% 0603 SMD	Panasonic – ECG	ERJ-3EKF1002V
1	R20	RES 332 OHM 1/10W 1% 0603 SMD	Panasonic – ECG	ERJ-3EKF3320V
2	R21, R22	RES 24.9 OHM 1/10W 1% 0603 SMD	Panasonic – ECG	ERJ-3EKF24R9V
1	R23	DO NOT POPULATE	—	—
1	R24	RES 523 OHM 1/10W 1% 0603 SMD	Panasonic – ECG	ERJ-3EKF5230V
1	R25	RES 4.70K OHM 1/10W 1% 0603 SMD	Panasonic – ECG	ERJ-3EKF4701V
2	R26, R28	RES 47.0K OHM 1/10W 1% 0603 SMD	Panasonic – ECG	ERJ-3EKF4702V
2	R29, R30	RES 2.20K OHM 1/10W 1% 0603 SMD	Panasonic – ECG	ERJ-3EKF2201V
3	R31, R35, R37	RES 220 OHM 1/10W 1% 0603 SMD	Panasonic – ECG	ERJ-3EKF2200V
3	R36, R38, R39	RES 1.00K OHM 1/10W 1% 0603 SMD	Panasonic – ECG	ERJ-3EKF1001V
4	S2, S3, S4, S5	SWITCH LT TOUCH 6X3.5 100GF SMD	Panasonic – ECG	EVQ-PJS04K
1	U1	MCP3421 SOT-23_6L A0	Microchip Technology Inc.	**MCP3421A0T-E/CH**
1	U2	PIC18F4550 TQFP44	Microchip Technology Inc.	**PIC18F4550-I/PT**
1	U4	MCP1702 SOT23A 5V CMOS low dropout positive voltage regulator	Microchip Technology Inc.	**MCP1701T-5002I/CB**
1	U5	MCP6V02 SOIC8 Linear High Precision Op Amps-Auto Zero	Microchip Technology Inc.	**MCP6V07-E/SN**
1	USB1	CONN RECEPT MINI USB2.0 5POS	Hirose Electric Co., Ltd.	UX60-MB-5ST
1	X1	CRYSTAL 20MHZ METAL CASE SMD	Connor-Winfield	XM-1-20.0000

Note 1: The components listed in this Bill of Materials are representative of the PCB assembly. The released BOM used in manufacturing uses all RoHS-compliant components.

© 2010 Microchip Technology Inc.

NOTES:

Worldwide Sales and Service

AMERICAS

Corporate Office
2355 West Chandler Blvd.
Chandler, AZ 85224-6199
Tel: 480-792-7200
Fax: 480-792-7277
Technical Support:
http://support.microchip.com
Web Address:
www.microchip.com

Atlanta
Duluth, GA
Tel: 678-957-9614
Fax: 678-957-1455

Boston
Westborough, MA
Tel: 774-760-0087
Fax: 774-760-0088

Chicago
Itasca, IL
Tel: 630-285-0071
Fax: 630-285-0075

Cleveland
Independence, OH
Tel: 216-447-0464
Fax: 216-447-0643

Dallas
Addison, TX
Tel: 972-818-7423
Fax: 972-818-2924

Detroit
Farmington Hills, MI
Tel: 248-538-2250
Fax: 248-538-2260

Kokomo
Kokomo, IN
Tel: 765-864-8360
Fax: 765-864-8387

Los Angeles
Mission Viejo, CA
Tel: 949-462-9523
Fax: 949-462-9608

Santa Clara
Santa Clara, CA
Tel: 408-961-6444
Fax: 408-961-6445

Toronto
Mississauga, Ontario,
Canada
Tel: 905-673-0699
Fax: 905-673-6509

ASIA/PACIFIC

Asia Pacific Office
Suites 3707-14, 37th Floor
Tower 6, The Gateway
Harbour City, Kowloon
Hong Kong
Tel: 852-2401-1200
Fax: 852-2401-3431

Australia - Sydney
Tel: 61-2-9868-6733
Fax: 61-2-9868-6755

China - Beijing
Tel: 86-10-8528-2100
Fax: 86-10-8528-2104

China - Chengdu
Tel: 86-28-8665-5511
Fax: 86-28-8665-7889

China - Chongqing
Tel: 86-23-8980-9588
Fax: 86-23-8980-9500

China - Hong Kong SAR
Tel: 852-2401-1200
Fax: 852-2401-3431

China - Nanjing
Tel: 86-25-8473-2460
Fax: 86-25-8473-2470

China - Qingdao
Tel: 86-532-8502-7355
Fax: 86-532-8502-7205

China - Shanghai
Tel: 86-21-5407-5533
Fax: 86-21-5407-5066

China - Shenyang
Tel: 86-24-2334-2829
Fax: 86-24-2334-2393

China - Shenzhen
Tel: 86-755-8203-2660
Fax: 86-755-8203-1760

China - Wuhan
Tel: 86-27-5980-5300
Fax: 86-27-5980-5118

China - Xian
Tel: 86-29-8833-7252
Fax: 86-29-8833-7256

China - Xiamen
Tel: 86-592-2388138
Fax: 86-592-2388130

China - Zhuhai
Tel: 86-756-3210040
Fax: 86-756-3210049

ASIA/PACIFIC

India - Bangalore
Tel: 91-80-3090-4444
Fax: 91-80-3090-4123

India - New Delhi
Tel: 91-11-4160-8631
Fax: 91-11-4160-8632

India - Pune
Tel: 91-20-2566-1512
Fax: 91-20-2566-1513

Japan - Yokohama
Tel: 81-45-471- 6166
Fax: 81-45-471-6122

Korea - Daegu
Tel: 82-53-744-4301
Fax: 82-53-744-4302

Korea - Seoul
Tel: 82-2-554-7200
Fax: 82-2-558-5932 or
82-2-558-5934

Malaysia - Kuala Lumpur
Tel: 60-3-6201-9857
Fax: 60-3-6201-9859

Malaysia - Penang
Tel: 60-4-227-8870
Fax: 60-4-227-4068

Philippines - Manila
Tel: 63-2-634-9065
Fax: 63-2-634-9069

Singapore
Tel: 65-6334-8870
Fax: 65-6334-8850

Taiwan - Hsin Chu
Tel: 886-3-6578-300
Fax: 886-3-6578-370

Taiwan - Kaohsiung
Tel: 886-7-213-7830
Fax: 886-7-330-9305

Taiwan - Taipei
Tel: 886-2-2500-6610
Fax: 886-2-2508-0102

Thailand - Bangkok
Tel: 66-2-694-1351
Fax: 66-2-694-1350

EUROPE

Austria - Wels
Tel: 43-7242-2244-39
Fax: 43-7242-2244-393

Denmark - Copenhagen
Tel: 45-4450-2828
Fax: 45-4485-2829

France - Paris
Tel: 33-1-69-53-63-20
Fax: 33-1-69-30-90-79

Germany - Munich
Tel: 49-89-627-144-0
Fax: 49-89-627-144-44

Italy - Milan
Tel: 39-0331-742611
Fax: 39-0331-466781

Netherlands - Drunen
Tel: 31-416-690399
Fax: 31-416-690340

Spain - Madrid
Tel: 34-91-708-08-90
Fax: 34-91-708-08-91

UK - Wokingham
Tel: 44-118-921-5869
Fax: 44-118-921-5820

08/04/10

© 2010 Microchip Technology Inc.