

MCP215X/40
Developer's Daughter Board
User's Guide

© 2006 Microchip Technology Inc.

Note the following details of the code protection feature on Microchip devices:

- Microchip products meet the specification contained in their particular Microchip Data Sheet.
- Microchip believes that its family of products is one of the most secure families of its kind on the market today, when used in the intended manner and under normal conditions.
- There are dishonest and possibly illegal methods used to breach the code protection feature. All of these methods, to our knowledge, require using the Microchip products in a manner outside the operating specifications contained in Microchip's Data Sheets. Most likely, the person doing so is engaged in theft of intellectual property.
- Microchip is willing to work with the customer who is concerned about the integrity of their code.
- Neither Microchip nor any other semiconductor manufacturer can guarantee the security of their code. Code protection does not mean that we are guaranteeing the product as "unbreakable."

Code protection is constantly evolving. We at Microchip are committed to continuously improving the code protection features of our products. Attempts to break Microchip's code protection feature may be a violation of the Digital Millennium Copyright Act. If such acts allow unauthorized access to your software or other copyrighted work, you may have a right to sue for relief under that Act.

Information contained in this publication regarding device applications and the like is provided only for your convenience and may be superseded by updates. It is your responsibility to ensure that your application meets with your specifications. MICROCHIP MAKES NO REPRESENTATIONS OR WARRANTIES OF ANY KIND WHETHER EXPRESS OR IMPLIED, WRITTEN OR ORAL, STATUTORY OR OTHERWISE, RELATED TO THE INFORMATION, INCLUDING BUT NOT LIMITED TO ITS CONDITION, QUALITY, PERFORMANCE, MERCHANTABILITY OR FITNESS FOR PURPOSE. Microchip disclaims all liability arising from this information and its use. Use of Microchip devices in life support and/or safety applications is entirely at the buyer's risk, and the buyer agrees to defend, indemnify and hold harmless Microchip from any and all damages, claims, suits, or expenses resulting from such use. No licenses are conveyed, implicitly or otherwise, under any Microchip intellectual property rights.

Trademarks

The Microchip name and logo, the Microchip logo, Accuron, dsPIC, KEELOQ, microID, MPLAB, PIC, PICmicro, PICSTART, PRO MATE, PowerSmart, rfPIC and SmartShunt are registered trademarks of Microchip Technology Incorporated in the U.S.A. and other countries.

AmpLab, FilterLab, Migratable Memory, MXDEV, MXLAB, PICMASTER, SEEVAL, SmartSensor and The Embedded Control Solutions Company are registered trademarks of Microchip Technology Incorporated in the U.S.A.

Analog-for-the-Digital Age, Application Maestro, dsPICDEM, dsPICDEM.net, dsPICworks, ECAN, ECONOMONITOR, FanSense, FlexROM, fuzzyLAB, In-Circuit Serial Programming, ICSP, ICEPIC, Linear Active Thermistor, MPASM, MPLIB, MPLINK, MPSIM, PICkit, PICDEM, PICDEM.net, PICLAB, PICtail, PowerCal, PowerInfo, PowerMate, PowerTool, Real ICE, rfLAB, rfPICDEM, Select Mode, Smart Serial, SmartTel, Total Endurance, UNI/O, WiperLock and Zena are trademarks of Microchip Technology Incorporated in the U.S.A. and other countries.

SQTP is a service mark of Microchip Technology Incorporated in the U.S.A.

All other trademarks mentioned herein are property of their respective companies.

© 2006, Microchip Technology Incorporated, Printed in the U.S.A., All Rights Reserved.

Printed on recycled paper.

QUALITY MANAGEMENT SYSTEM
CERTIFIED BY DNV
ISO/TS 16949:2002

Microchip received ISO/TS-16949:2002 quality system certification for its worldwide headquarters, design and wafer fabrication facilities in Chandler and Tempe, Arizona and Mountain View, California in October 2003. The Company's quality system processes and procedures are for its PICmicro® 8-bit MCUs, KEELOQ® code hopping devices, Serial EEPROMs, microperipherals, nonvolatile memory and analog products. In addition, Microchip's quality system for the design and manufacture of development systems is ISO 9001:2000 certified.

© 2006 Microchip Technology Inc.

MCP215X/40 DEVELOPER'S DAUGHTER BOARD USER'S GUIDE

Table of Contents

Preface 1

Chapter 1. Product Overview 7

1.1 Introduction 7
1.2 What is the MCP215X/40 Developer's Daughter Board? 7
1.3 What the MCP215X/40 Developer's Daughter Board Kit Includes 8

Chapter 2. Installation and Operation 9

2.1 Introduction 9
2.2 Features 10
2.3 Getting Started 12
2.4 Making a Demo System 21
2.5 MCP215X/40 Developer's Daughter Board Description 23

Appendix A. Schematic and Layouts 31

A.1 Introduction 31
A.2 Schematics and PCB Layout 31
A.3 Schematic (Headers and Jumpers) – Page 1 32
A.4 Schematic (Circuitry) – Page 2 33
A.5 Schematic (Circuitry) – Page 3 34
A.6 Board Layout – Component Layer 35
A.7 Board Layout – Top Layer 36
A.8 Board Layout – Bottom Layer 37
A.9 Board Layout – Power Layer 38
A.10 Board Layout – Ground Layer 39

Appendix B. Bill of Materials (BOM) 41

Appendix C. Board Testing 43

C.1 Introduction 43
C.2 What is Tested 43
C.3 What is NOT Tested 44

Appendix D. Using the MCP215X/40 Developer's Daughter Board with the PICDEM™ HPC Explorer Demo Board 45

D.1 Demonstration using the PICDEM™ HPC Explorer Demo Board 45

Appendix E. Using the MCP215X/40 Developer's Daughter Board with the PICDEM™ FS USB Demo Board 65

E.1 Demonstration with the PICDEM FS USB Demo Board 65
E.2 MCP215X/40 Developer's Daughter Board PCB Rev 2 Errata 73

Appendix F. Configuring the HyperTerminal® Program 75

F.1 Configuring the HyperTerminal® Program 75

Appendix G. MCP215X/40 Connection Sequence Overview 81
Appendix H. MCP215X/40 250-Byte Data Transmit Table 83
Appendix I. Alternate Optical Transceiver Implementation 85
I.1 Introduction 85
I.2 Highlights 85
I.3 Vishay® TFDU 4100 Implementation 86
I.4 Agilent® HSDL 3000 Implementation 87
Appendix J. PCB Silk-Screen Clarification 89
J.1 Introduction 89
Worldwide Sales and Service 90

© 2006 Microchip Technology Inc.

MCP215X/40 DEVELOPER'S DAUGHTER BOARD USER'S GUIDE

Preface

NOTICE TO CUSTOMERS

All documentation becomes dated, and this manual is no exception. Microchip tools and documentation are constantly evolving to meet customer needs, so some actual dialogs and/or tool descriptions may differ from those in this document. Please refer to our web site (www.microchip.com) to obtain the latest documentation available.

Documents are identified with a "DS" number. This number is located on the bottom of each page, in front of the page number. The numbering convention for the DS number is "DSXXXXXA", where "XXXXX" is the document number and "A" is the revision level of the document.

INTRODUCTION

This chapter contains general information that will be useful to know before using the MCP215X/40 Developer's Daughter Board. Items discussed in this chapter include:

- Document Layout
- Conventions Used in this Guide
- Recommended Reading
- The Microchip Web Site
- Customer Support
- Document Revision History

DOCUMENT LAYOUT

This document describes how to use the MCP215X/40 Developer's Daughter Board as a development tool to emulate and debug firmware on a target board. The manual layout is as follows:

- **Chapter 1. "Product Overview"** – Important information about the MCP215X/40 Developer's Daughter Board.
- **Chapter 2. "Installation and Operation"** – Includes a detailed description of each function, as well as instructions on how to get started with this daughter board.
- **Appendix A. "Schematic and Layouts"** – Shows the schematic and layout diagrams for the MCP215X/40 Developer's Daughter Board.
- **Appendix B. "Bill of Materials (BOM)"** – Lists the parts used to build the MCP215X/40 Developer's Daughter Board.
- **Appendix C. "Board Testing"** – Discusses the testing of the MCP215X/40 Developer's Daughter Board.
- **Appendix D. "Using the MCP215X/40 Developer's Daughter Board with the PICDEM™ HPC Explorer Demo Board"** – Shows how the MCP215X/40 Developer's Daughter Board can be demonstrated using the PICDEM™ HPC Explorer Demo Board.
- **Appendix E. "Using the MCP215X/40 Developer's Daughter Board with the PICDEM™ FS USB Demo Board"** – Shows how the MCP215X/40 Developer's Daughter Board can be demonstrated using the PICDEM™ FS USB Demo Board.
- **Appendix F. "Configuring the HyperTerminal® Program"** – Shows the configuration of the HyperTerminal program used to demonstrate the MCP215X/40 Developer's Daughter Board system.
- **Appendix G. "MCP215X/40 Connection Sequence Overview"** – Shows a high level overview of the connection sequence between a Primary Device and either the MCP215X or MCP2140 device.
- **Appendix H. "MCP215X/40 250-Byte Data Transmit Table"** – Shows the data table that is transmitted to the Primary Device (from the embedded system) if the "Data Logger" demo is selected.
- **Appendix I. "Alternate Optical Transceiver Implementation"** – Discusses what needs to be done if an alternate optical transceiver circuit is to be used. This includes changes to the circuit when using the MCP2140 device.
- **Appendix J. "PCB Silk-Screen Clarification"** – Clarifies what the silk screen marking should say for the JMP4 jumper.

© 2006 Microchip Technology Inc.

CONVENTIONS USED IN THIS GUIDE

This manual uses the following documentation conventions:

DOCUMENTATION CONVENTIONS

Description	Represents	Examples
Arial font:		
Italic characters	Referenced books	*MPLAB® IDE User's Guide*
	Emphasized text	...is the *only* compiler...
Initial caps	A window	the Output window
	A dialog	the Settings dialog
	A menu selection	select Enable Programmer
Quotes	A field name in a window or dialog	"Save project before build"
Underlined, italic text with right angle bracket	A menu path	*File>Save*
Bold characters	A dialog button	Click **OK**
	A tab	Click the **Power** tab
N'Rnnnn	A number in verilog format, where N is the total number of digits, R is the radix and n is a digit.	4'b0010, 2'hF1
Text in angle brackets < >	A key on the keyboard	Press <Enter>, <F1>
Courier New font:		
Plain Courier New	Sample source code	`#define START`
	Filenames	`autoexec.bat`
	File paths	`c:\mcc18\h`
	Keywords	`_asm, _endasm, static`
	Command-line options	`-Opa+, -Opa-`
	Bit values	`0, 1`
	Constants	`0xFF, 'A'`
Italic Courier New	A variable argument	*`file`*`.o`, where *`file`* can be any valid filename
Square brackets [ ]	Optional arguments	`mcc18 [options]` *`file`* `[options]`
Curly brackets and pipe character: { | }	Choice of mutually exclusive arguments; an OR selection	`errorlevel {0|1}`
Ellipses...	Replaces repeated text	`var_name [, var_name...]`
	Represents code supplied by user	`void main (void) { ... }`

RECOMMENDED READING

This user's guide describes how to use the MCP215X/40 Developer's Daughter Board. The following Microchip documents are available and recommended as supplemental reference resources.

MCP2150 Data Sheet (DS21655)

This data sheet provides detailed information regarding the MCP2150 device.

MCP2155 Data Sheet (DS21690)

This data sheet provides detailed information regarding the MCP2150 device.

MCP2140 Data Sheet (DS21790)

This data sheet provides detailed information regarding the MCP2140 device.

AN858, "Interfacing the MCP215x to the Host Controller" (DS00858)

This application note discusses the interface between a Host Controller and the MCP215X device.

TB073, "Selecting a MCP21XX Device for IrDA® Applications" (DS91073)

This technical brief discusses the selection of the MCP21XX devices for IrDA® standard applications.

AN888, "Programming the Palm OS® for Embedded IR Applications" (DS00888)

This application note discusses the application programming of Palm OS devices for embedded IrDA® standard applications.

AN926, "Programming the Pocket PC OS for Embedded IR Applications" (DS00926)

This application note discusses the application programming of Pocket PC OS devices for embedded IrDA® standard applications.

AN941, "Programming Windows® XP for Embedded IR Applications" (DS00941)

This application note discusses the application programming of Windows XP for embedded IrDA® standard applications.

AN923, "Using the MCP2120 Developer's Board for "IR Sniffing"" (DS00923)

This application note discusses how one can use the MCP2120 Developer's Board for "IR Sniffing". This technique can assist in the debugging of an IrDA® standard system.

AN927, "Data Throughput and the MCP215X" (DS00927)

This application note discusses the operation of the MCP215X and how data throughput can be effected by the Host Controller's operation.

MCP215X Data Logger Demo Board User's Guide (DS51516)

This User's Guide provides information regarding the use of the MCP215X devices in an embedded system. This document also includes discussion of a Primary Device application program and it's operation.

MCP2140 IrDA® Standard Wireless Temperature Sensor Demo Board User's Guide (DS51487)

This User's Guide provides information regarding the use of the MCP2140 devices in an embedded system and a discussion of a Primary Device application program and it's operation.

MCP2120/MCP2150 Developer's Kit User's Guide (DS51246)

This User's Guide provides information on the MCP2150 Developer's Board.

© 2006 Microchip Technology Inc.

The following documents may be useful, depending on which PICDEM™ demo board you are using with the MCP215X/40 Developer's Daughter Board.

PIC18F8722 Family Data Sheet (DS39646)

This data sheet provides detailed information regarding the PIC18F8722 device. This device is used on the PICDEM™ HPC Explorer Demo Board (DM183022).

PICDEM™ 2 Plus Demo Board User's Guide (DS51275)

This user's guide provides detailed information regarding the PICDEM™ 2 Plus Board (DM163022).

PIC16F87XA Family Data Sheet (DS39582)

This data sheet provides detailed information regarding the PIC16F87XA device. This device is used on the PICDEM™ 2 Plus Demo Board (DM163022).

PICDEM™ FS USB Demonstration Board User's Guide (DS51526)

This user's guide provides detailed information regarding the PICDEM™ Full-Speed USB Demo Board (DM163025).

PIC18F2455/2550/4455/4550 Data Sheet (DS39632)

This data sheet provides detailed information regarding the PIC18F4550 device. This device is used on the PICDEM™ Full-Speed USB Demo Board (DM163025).

PICDEM™ LCD Demo Board User's Guide (DS51536)

This user's guide provides detailed information regarding the PICDEM™ LCD Demo Board (DM163028).

PIC18F6390/6490/8390/8490 Data Sheet (DS39629)

This data sheet provides detailed information regarding the PIC18F8490 device. This device is used on the PICDEM™ LCD Demo Board (DM163028).

THE MICROCHIP WEB SITE

Microchip provides online support via our web site at www.microchip.com. This web site is used as a means to make files and information easily available to customers. Accessible by using your favorite Internet browser, the web site contains the following information:

- **Product Support** – Data sheets and errata, application notes and sample programs, design resources, user's guides and hardware support documents, latest software releases and archived software
- **General Technical Support** – Frequently Asked Questions (FAQs), technical support requests, online discussion groups, Microchip consultant program member listing
- **Business of Microchip** – Product selector and ordering guides, latest Microchip press releases, listing of seminars and events, listings of Microchip sales offices, distributors and factory representatives.

CUSTOMER SUPPORT

Users of Microchip products can receive assistance through several channels:

- Distributor or Representative
- Local Sales Office
- Field Application Engineer (FAE)
- Technical Support
- Development Systems Information Line

Customers should contact their distributor, representative or field application engineer (FAE) for support. Local sales offices are also available to help customers. A listing of sales offices and locations is included in the back of this document.

Technical support is available through the web site at: http://support.microchip.com

DOCUMENT REVISION HISTORY

Revision A (February 2006)

- Initial Release of this Document.

© 2006 Microchip Technology Inc.

Chapter 1. Product Overview

1.1 INTRODUCTION

This chapter provides an overview of the MCP215X/40 Developer's Daughter Board and covers the following topics:

- What is the MCP215X/40 Developer's Daughter Board?
- What the MCP215X/40 Developer's Daughter Board Kit includes

1.2 WHAT IS THE MCP215X/40 DEVELOPER'S DAUGHTER BOARD?

The MCP215X/40 Developer's Daughter Board is used to evaluate and demonstrate the MCP2150, MCP2155 or MCP2140 IrDA® Standard Protocol Handler with Encoder/Decoder devices. This allows the system designer to implement a low-cost, wireless IR port in any application providing support for IrDA standard bit encoding/decoding.

The MCP215X/40 Developer's Daughter Board is designed to interface to several of the "new" low-cost PICmicro® microcontroller-based demonstration (demo) boards, or to be interfaced into your application. Multiple header interfaces are available that allow support for the many different PICDEM™ Demo Boards, as well as being easily jumpered into systems for development purposes. Table 1-1 shows some of the PICDEM™ demo boards that are supported.

Depending on the features of the PICmicro Microcontroller Unit (MCU) and the selected demo board, the MCP215X/MCP2140 TX and RX signals can either be connected (jumpered) directly to the RS-232 line driver or to the PICmicro MCU's RX and TX signals. The PICmicro MCU could process that data and then send it out of the UART.

TABLE 1-1: PICDEM™ DEMO BOARD SUPPORT (1)

Name	Order Number	User's Guide Literature #	Host Controller (PICmicro® MCU) Supported	Header(s) Used	TX/RX Signals to (3)	
					Host Controller	RS-232
PICDEM™ HPC Explorer Board (2)	DM183022	—	PIC18F8722	H1, H2	Y	Y
PICDEM™ LCD	DM163028	DS51536	PIC18F8490	H1, H2	Y	Y
PICDEM™ Full-Speed USB	DM163025	DS51526	PIC18F4550	H3	Y	N/A
PICDEM™ 2 Plus	DM163022	DS51275	PIC16F877, PIC18F452	H3	Y	N
User Embedded System	N/A	—	—	HD1 and HD2	Y	—

Note 1: Other boards may also be supported. Please refer to the MCP215X/40 Developer's Daughter Board and desired PICDEM™ Demo Board documentation to determine if the boards you are using are supported.

2: For proper orientation of the daughter board to the PICDEM™ demo board, Revision 5 of the PICDEM™ HPC Explorer Board is recommended. Revision 4 will function, but the direction of the optical transceiver will be facing the same side as the serial port connector.

3: The MCP215X/40 Developer's Daughter Board allows the MCP215X TX and RX signals to be routed to different header connections. This may allow the system to support multiple configurations, such as being connected to either the PICmicro® MCU USART or to the RS-232 driver (allows the MCP215X to directly communicate via the DB-9 connector).

1.3 WHAT THE MCP215X/40 DEVELOPER'S DAUGHTER BOARD KIT INCLUDES

This MCP215X/40 Developer's Daughter Board Kit includes:

- The MCP215X/40 Developer's Daughter Board (with MCP2150 installed)
- MCP215X/40 Developer's Daughter Board User's Guide (DS51591) (on CD-ROM)
- PICDEM™ HPC Explorer Board firmware (on CD-ROM)
- PICDEM™ USB Board firmware (on CD-ROM)

 © 2006 Microchip Technology Inc.

Chapter 2. Installation and Operation

2.1 INTRODUCTION

This chapter discusses the operation of the MCP215X/40 Developer's Daughter Board and how it can be used in conjunction with some of Microchip's low-cost PICDEM™ Demo Boards or easily connected to your system.

When the MCP215X/40 Developer's Daughter Board is used in conjunction with one of the low-cost PICDEM™ Demo Boards, it demonstrates the implementation of an embedded system with an IrDA® standard protocol handler with encoder/decoder. A Primary Device (PC with IR port, PDA, etc.) is required to demonstrate the operation of this embedded system.

The Host UART interface includes the data signals (TX and RX) and the flow control signals (CTS, RTS, CD, DSR, DTR and RI). A discussion of the Host UART interface is given in the following application note:

- AN858, *"Interfacing the MCP215X to a Host Controller"* (DS00858)
- AN927, *"Data Throughput and the MCP215X"* (DS00927)

2.2 FEATURES

The MCP215X/40 Developer's Daughter Board has the following features:

- 18-pin DIP socket for the installation of the MCP2150, MCP2155 or MCP2140
- Installed optical transceiver circuit using:
  - Vishay® TFDU 4300
- Footprint for optional optical transceiver circuits using:
  - Vishay TFDU 4100
  - Agilent® HSDL 3000
- Waveform shaping circuit for MCP2140
- Jumpers to select circuit connection between MCP215X and MCP2140:
  - BAUD0 and RXPD
  - BAUD1 and RXPDREF
  - EN and PHACT
  - CD and DSR (Drives the "IR Link" LED)
- Crystal socket to allow ease of crystal selection:
  - 11.0592 MHz for the MCP215X or
  - 7.3728 MHz for the MCP2140
- Dual Header (H1 and H2) to connect to:
  - PICDEM™ HPC Explorer Demo Board
  - PICDEM™ LCD Demo Board
- Header (H3) to connect to:
  - PICDEM™ Full-Speed USB Demo Board
  - PICDEM™ 2 Plus Demo Board
- Two Headers (HD1 and HD2) to easily connect to the user's embedded system
- Jumpers to select connection point (header) for the following signals:
  - TX
  - RX
- Jumpers to "swap" TX and RX so that the MCP215X and MCP2140 can directly communicate over the PICDEM™ HPC Explorer Board's DB-9 connector
- Jumpers which can be used by the PICDEM™ Demo Board firmware program to determine the mode of operation
- Jumpers to connect RX and TX signals to the PICDEM™ 2 Plus Demo Board connection pins

© 2006 Microchip Technology Inc.

TABLE 2-1: PICDEM™ DEMO BOARD SUPPORT

PICmicro® MCU Demo Board Name	Part #	PICmicro® MCU	MCU Interface to PC	MCP215X/40 RX/TX direct access to DB9	User's Guide Lit. #	Comment
PICDEM™ HPC Explorer	DM183022	PIC18F8722	UART	Yes	—	MCU firmware could support: • MCP215X/40 → MCU • MCP215X/40 → PC (UART) • MCP215X/40 → MCU → PC (UART)
PICDEM™ LCD	DM163028	PIC18F8490	UART	Yes	DS51536	MCU firmware could support: • MCP215X/40 → MCU • MCP215X/40 → PC (UART) • MCP215X/40 → MCU → PC (UART) DB-9 does not have CTS signal
PICDEM™ Full-Speed USB	DM163025	PIC18F4550	USB	—	DS51526	MCU firmware could support: • MCP215X/40 → MCU • MCP215X/40 → MCU → PC (USB)
PICDEM™ 2 Plus	DM163022	PIC16F877/ PIC18F452	UART	—	DS51275	MCU firmware could support: • MCP215X/40 → MCU

2.3 GETTING STARTED

This section presents an overview of the following system blocks:

- The MCP215X/40 Developer's Daughter Board Hardware
- The MCP215X/40 Developer's Daughter Board Firmware

2.3.1 The MCP215X/40 Developer's Daughter Board Hardware Overview

The major components for the MCP215X/40 Developer's Daughter Board are listed below and shown in Figure 2-1. They are:

1. MCP215X and MCP2140 device socket (U1).
2. Optical transceiver (U5 – Vishay TFDU 4300).
3. Headers H1 and H2.
4. Header H3.
5. Header HD1 and HD2.
6. Jumpers to route the TX and RX signals.
7. Jumpers to select the baud rate and the program operational mode, and to enable/disable the MCP215X.
8. Jumpers to configure the board for MCP2150, MCP2155 or MCP2140 device.
9. Footprint for two different optional optical transceiver circuits (Vishay TFDU 4100 and Agilent HSDL 3000).
10. MCP215X and MCP2140 crystal socket (Y1).

The MCP215X/40 Developer's Daughter Board is assembled and tested to allow for the evaluation and demonstration of the MCP2150, MCP2155 or MCP2140 features. A schematic of the circuit, as well as the corresponding PCB layout, is shown in **Appendix A. "Schematic and Layouts"**. **Appendix B. "Bill of Materials (BOM)"** shows two tables; the first is the components that are installed, while the second lists the optional components that are not installed.

The component layout floor plan is shown in Figure 2-1.

© 2006 Microchip Technology Inc.

FIGURE 2-1: MCP215X/40 DEVELOPER'S DAUGHTER BOARD COMPONENT FLOOR PLAN

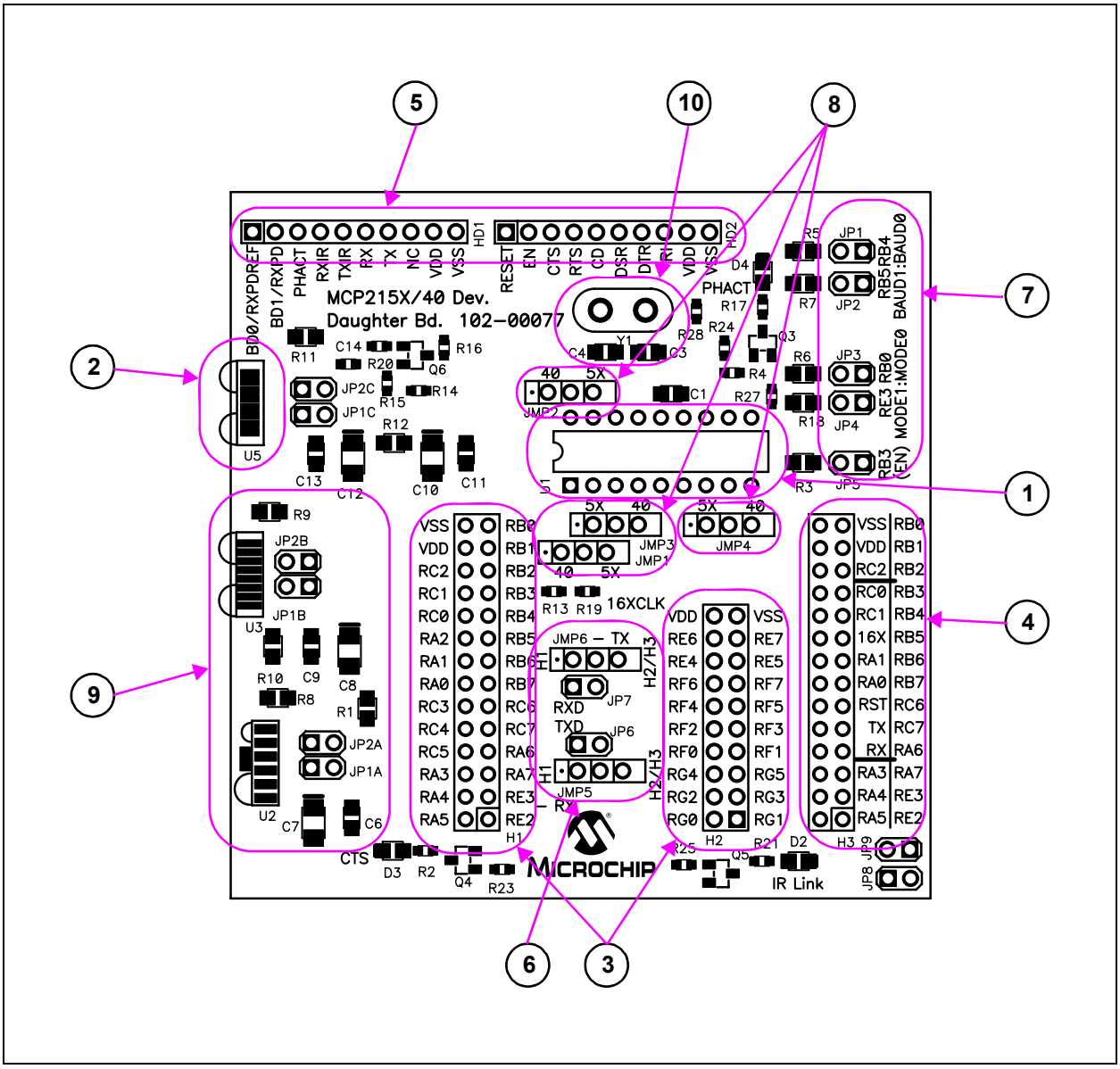

2.3.2 Jumper Settings

Figure 2-2 shows the component layout for the MCP215X/40 Developer's Daughter Board and the operation of the JMP5/JP6 and JMP6/JP7 jumpers. These jumpers route the RX and TX signals to different Headers (H1, H2, H3) and pins on those headers. This allows the RX and TX signals to be routed to:

- UART1 (on H1 and H3)
- UART2 (on H2)
- PICDEM™ HPC Explorer Demo Board MAX3232 device, which requires the TX and RX signals to be crossed

The JP8 and JP9 jumpers route the TX and RX signals to additional pins on the H3 header. This allows the board to be interfaced to the PICDEM-2 Plus Demo Board.

A description of all the MCP215X/40 Developer's Daughter Board jumpers is given in Table 2-4.

© 2006 Microchip Technology Inc.

FIGURE 2-2: JMP5/JP6, JMP6/JP7, JP8 AND JP9 CONFIGURATIONS

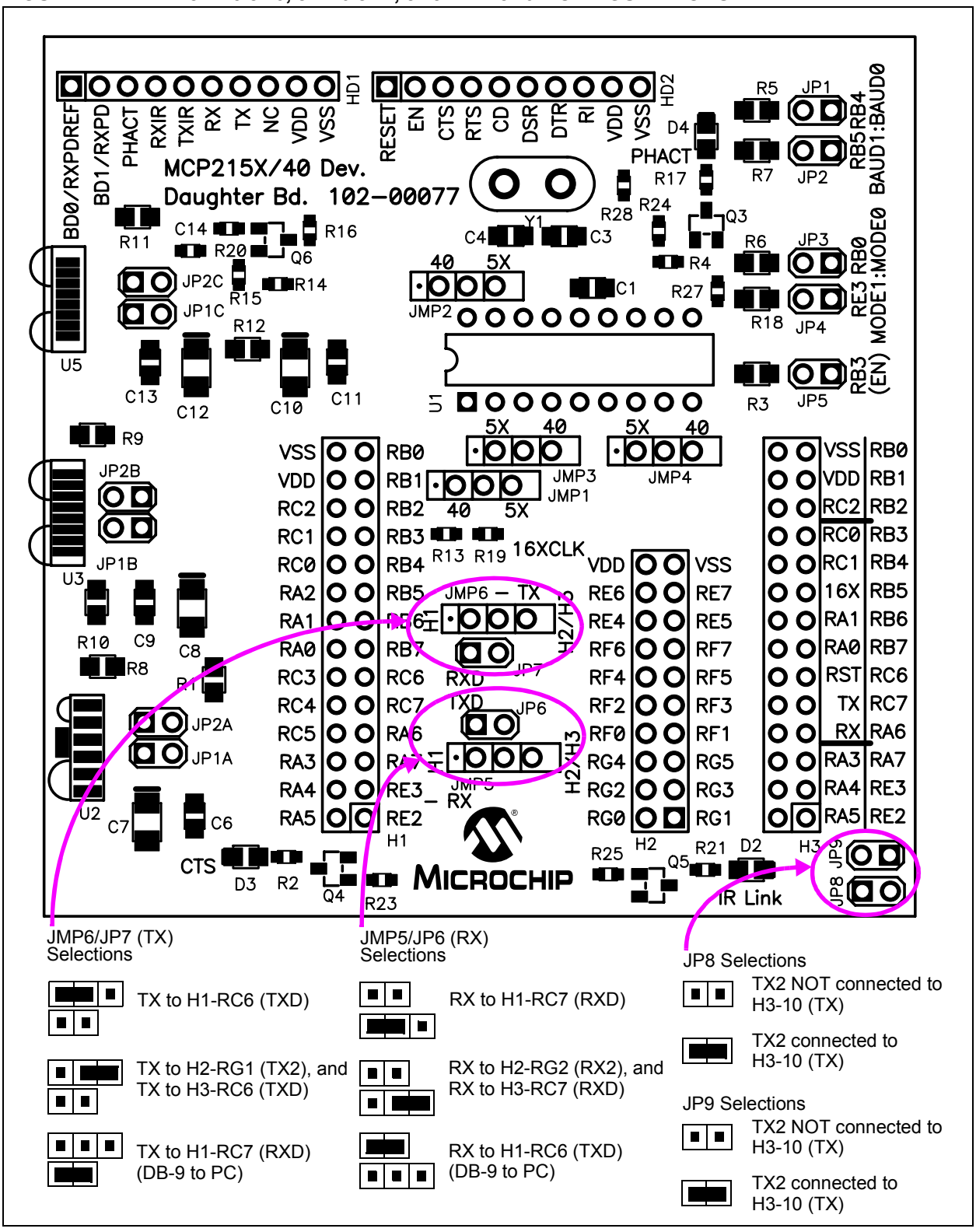

Figure 2-3 shows the component layout for the MCP215X/40 Developer's Daughter Board and the operation of the JP1, JP2, JP3, JP4 and JP5 jumpers. When the jumper is open, the signal is pulled high. When the jumper is shorted, the signal is pulled to ground.

Jumpers JP1 and JP2 are used to specify the MCP215X's baud rate. The MCP2140 has a fixed baud rate of 9600 baud. The BAUD0 signal is connected to Header H1/H3's RB4 pin. The BAUD1 signal is connected to Header H1/H3's RB5 pin.

Jumpers JP1 and JP2 are used to specify the Host Controller program mode.

The MODE0 signal is connected to Header H1/H3's RB0 and RA1 pins. The MODE1 signal is connected to Header H1/H3's RC2 and RE3 pins.

Note: When using header H3 with the PICDEM FS USB board, refer to **Appendix E. "Using the MCP215X/40 Developer's Daughter Board with the PICDEM™ FS USB Demo Board"** if the MCP215X/40 Developer's Daughter Board PCB is Rev 2.

Jumper JP5 are used to specify the MCP215X's operational state (Enable/Disable). The MCP2140 has an automatic lower power mode, so is not controlled by a hardware pin. The EN signal is connected to Header H1/H3's RB3 pin.

© 2006 Microchip Technology Inc.

FIGURE 2-3: JP1, JP2, JP3, JP4 AND JP5 CONFIGURATIONS

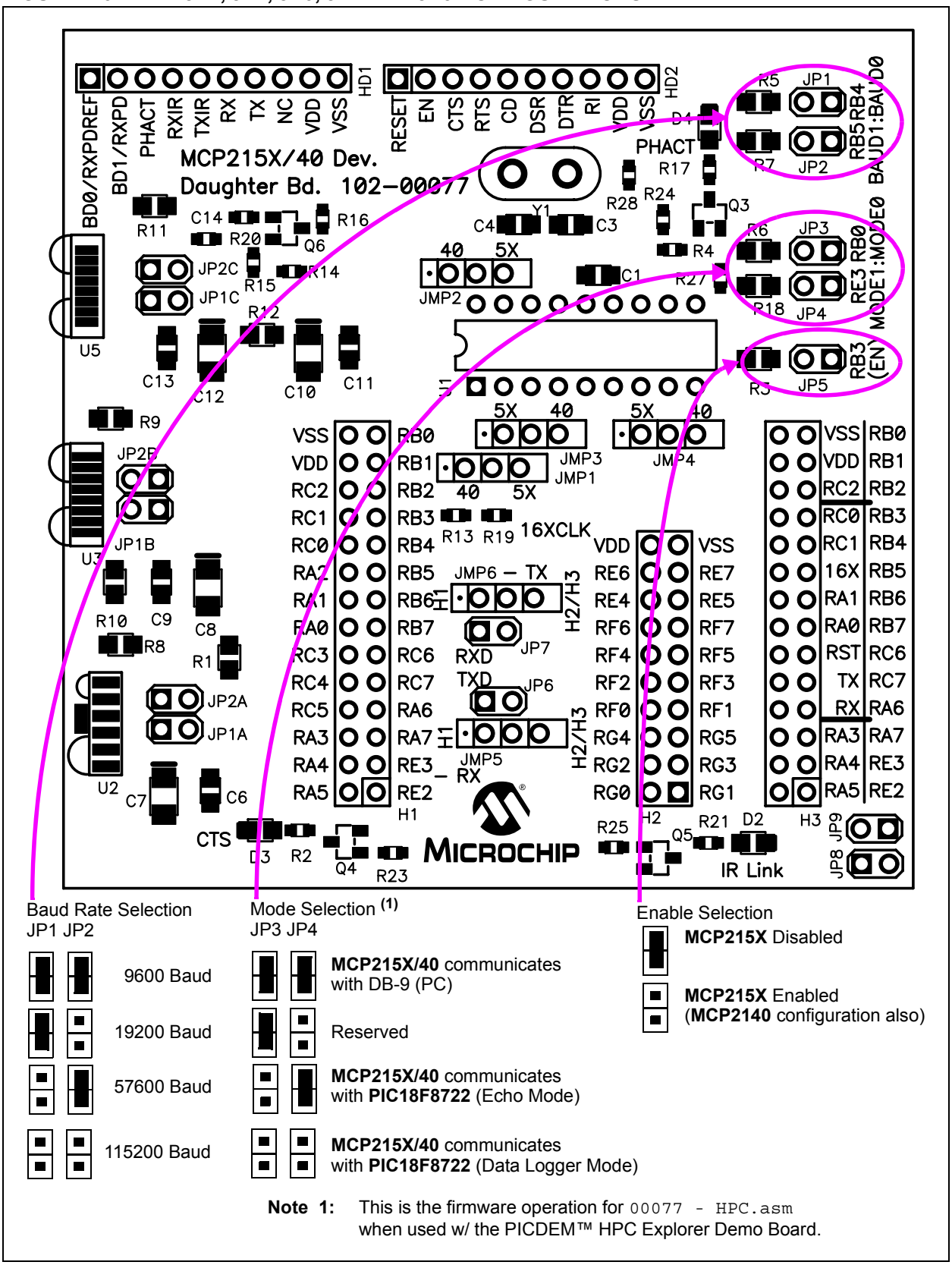

Baud Rate Selection
JP1 JP2

	9600 Baud
	19200 Baud
	57600 Baud
	115200 Baud

Mode Selection (1)
JP3 JP4

	MCP215X/40 communicates with DB-9 (PC)
	Reserved
	MCP215X/40 communicates with **PIC18F8722** (Echo Mode)
	MCP215X/40 communicates with **PIC18F8722** (Data Logger Mode)

Enable Selection

	MCP215X Disabled
	MCP215X Enabled (**MCP2140** configuration also)

Note 1: This is the firmware operation for `00077 - HPC.asm` when used w/ the PICDEM™ HPC Explorer Demo Board.

Figure 2-4 shows the component layout for the MCP215X/40 Developer's Daughter Board and the operation of the JMP1, JMP2, JMP3, JMP4, JP8 and JP9 jumpers.

The JMP1, JMP2, JMP3 and JMP4 jumpers route signals to the U1 socket (for the MCP215X or MCP2140 device).

Table 2-2 shows the signals for the JMP1, JMP2 and JMP3 jumpers, while Table 2-3 shows the signals for the JMP4 jumper.

TABLE 2-2: JMP1, JMP2 AND JMP3 CONNECTIONS

Jumper	U1 pin connection to JMPX-2 pin (Center pin)	MCP215X	MCP2140	Comment
JMP1	1	BAUD0	RXPDREF	
JMP2	18	BAUD1	RXPD	
JMP3	3	RXIR	PHACT	

TABLE 2-3: JMP4 CONNECTIONS (1)

Jumper	JMPX-2 pin (Center pin) connection to U1 pin	MCP2150 (DTE)	MCP2155 and MCP2140 (DCE)	Comment
JMP4	10 or 17	U1-17 (CD)	U1-10 (DSR)	The center tap of the JMP4 jumper drives the "IR Link" LED. This indicates that an IR Link is established.

Note 1: See **Appendix J. "PCB Silk-Screen Clarification"** for a clarification to the PCB silk-screen.

© 2006 Microchip Technology Inc.

FIGURE 2-4: JMP1, JMP2, JMP3 AND JMP4 CONFIGURATIONS

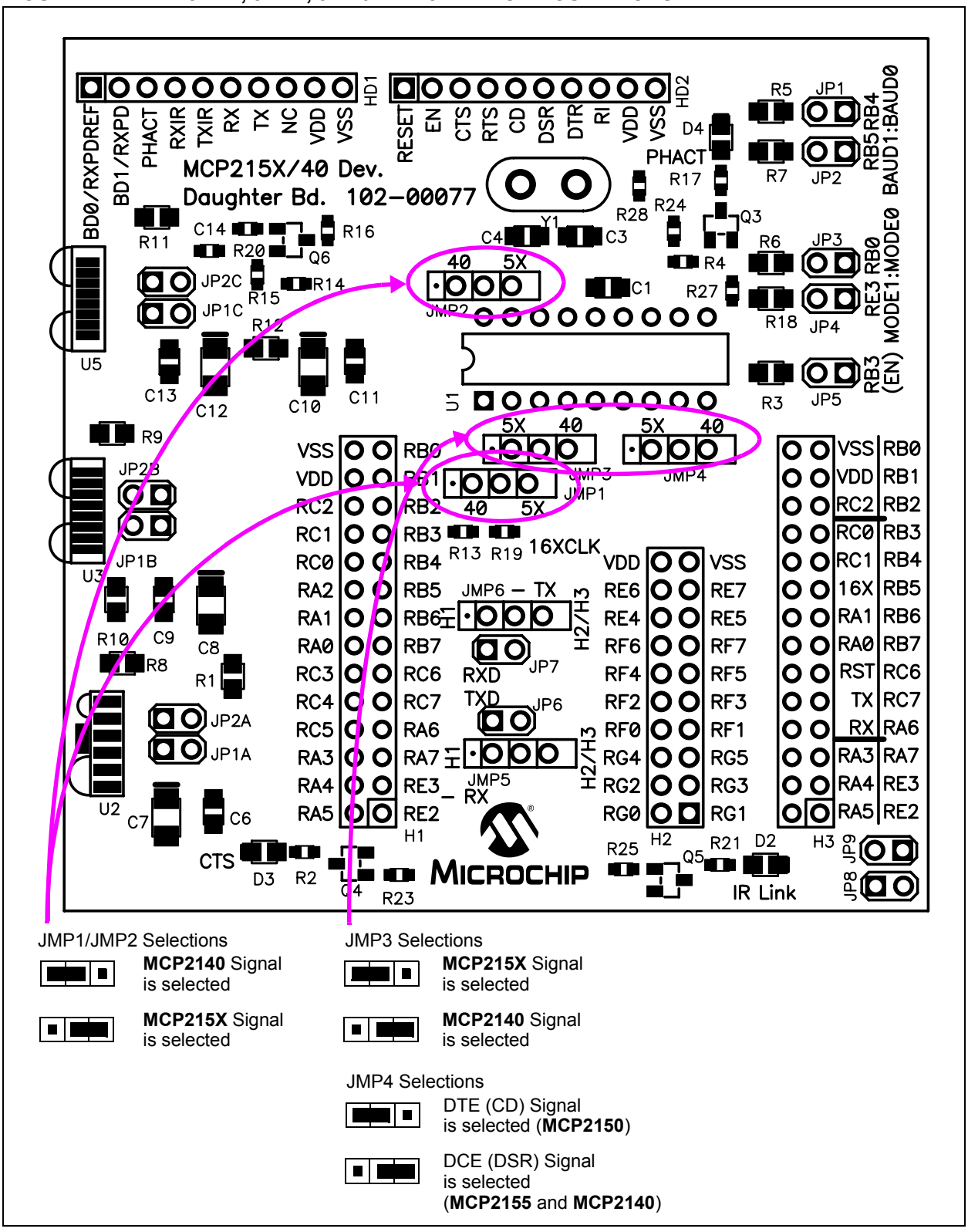

TABLE 2-4: JUMPER DESCRIPTIONS AND SETTINGS

Jumper #	Description	Comment
JP1A:JP2A	Connects TXIR/RXIR signals to TXD/RXD of U2 (HSDL 3000) S = TXIR/RXIR connected to U2 TXD/RXD O = TXIR/RXIR Not connected to U2 TXD/RXD	By default not installed.
JP1B:JP2B	Connects TXIR/RXIR signals to TXD/RXD of U3 (TFDU 4100) S = TXIR/RXIR connected to U3 TXD/RXD O = TXIR/RXIR Not connected to U3 TXD/RXD	By default not installed.
JP1C:JP2C	Connects TXIR/RXIR signals to TXD/RXD of U5 (TFDU 4300) S = TXIR/RXIR connected to U5 TXD/RXD O = TXIR/RXIR Not connected to U5 TXD/RXD	By default not installed. PCB traces short these jumpers (bottom of PCB).
JP2:JP1	BAUD1:BAUD0 Hardware control of the MCP215X baud rate. BAUD0 is connected to Header RA0 signal and BAUD1 is connected to Header RA0 signal S S = 9600 Baud S O = 19200 Baud O S = 57600 Baud O O = 115200 Baud	S = Signal Connected to VSS O = Signal Connected to VDD The MCP2140 has a fixed baud rate of 9600 baud.
JP4:JP3	MODE1:MODE0 Hardware program mode selection. Operation is dependant on the Host Controller program. `00077 - HPC.asm` Operation S S = Direct-to-PC S O = Reserved O S = Data Echo O O = Data Logger (250 Byte data transfer)	S = Signal Connected to VSS O = Signal Connected to VDD These operational modes are for the `00077 - HPC.asm` program with the PICDEM™ HPC Explorer Board.
JP5	EN Hardware control of the **MCP215X** EN signal. EN is connected to Header RA0 signal. S = Signal Connected to VSS O = Signal Connected to VDD	The **MCP2140** does not use this signal.
JMP1	Connects the U1 pin 1 to either the BAUD0 signal (**MCP215X**) or to the RXPDREF signal (**MCP2140**).	
JMP2	Connects the U1 pin 18 to either the BAUD1 signal (**MCP215X**) or to the RXPD signal (**MCP2140**).	
JMP3	Connects the U1 pin 3 to either the RXIR signal (**MCP215X**) or to the PHACT signal (**MCP2140**).	
JMP4	Connects the "IR Link" signal to either the U1-17 signal (CD) for the **MCP2150** device or to the U1-10 signal (DSR) for the **MCP2155** or **MCP2140** device.	
JMP5	Connects **MCP2140** RX signal to either Header 1's RX signal or Header 2/Header 3 RX signals	**Note 1**
JP6	Connects **MCP2140** RX signal to Header 1's TX signal	Used when the **MCP215X** or **MCP2140** communicates directly from the DB-9 connector. **(Note 1)**
JMP6	Connects **MCP2140** TX signal to Header 1's TX signal or Header 2/Header 3 TX signals	**Note 2**
JP7	Connects **MCP2140** TX signal to Header 1's RX signal	Used when the **MCP215X** or **MCP2140** communicates directly from the DB-9 connector. **(Note 2)**
JP8	Connects the RX2 signal (H3-9) to the H3-8 pin (RX2B)	For PICDEM™ 2 Plus Support.
JP9	Connects the TX2 signal (H3-11) to the H3-10 pin (TX2B)	For PICDEM™ 2 Plus Support.

Legend: S = Jumper is shorted (Closed) O = Jumper is Open

Note 1: The MCP2140's RX signal is either connected via JMP5 or JP6 (but not both at the same time).

2: The MCP2140's TX signal is either connected via JMP6 or JP7 (but not both at the same time).

© 2006 Microchip Technology Inc.

2.4 MAKING A DEMO SYSTEM

The MCP215X/40 Developer's Daughter Board requires a Host Controller or a UART circuit. To demonstrate the board, the easiest method is to use one of the compatible PICDEM™ Demo Boards. A good choice is the PICDEM™ HPC Explorer Demo Board. This allows the MCP215X or MCP2140 device to interface to either:

- PIC18F8722's EUSART1
- PIC18F8722's EUSART2
- PICDEM™ HPC Explorer Demo Board's DB-9 connector (MAX3232C)

Additional instructions for performing a demo using the PICDEM™ HPC Explorer Demo Board are shown in **Appendix D. "Using the MCP215X/40 Developer's Daughter Board with the PICDEM™ HPC Explorer Demo Board"**. **Appendix E. "Using the MCP215X/40 Developer's Daughter Board with the PICDEM™ FS USB Demo Board"** supplies instructions for performing a demo using the PICDEM™ FS USB Demo Board. **Appendix F. "Configuring the HyperTerminal® Program"** may be useful for configuring the HyperTerminal program on the PC.

System Requirements

Table 2-5 shows the requirements for a system that can be used to demonstrate the MCP215X/40 Developer's Daughter Board.

System Setup

The system setup requires a Primary Device and a Secondary Device. The Primary Device can be a PC with an IR port (integrated IR port or IR Dongle) or a PDA. The secondary device can be the embedded system (PICDEM™ HPC Explorer Demo Board and a MCP215X/40 Developer's Daughter Board) in a stand-alone mode or connected to a PC with a serial communication port (UART) and application program, such as HyperTerminal.

Figure 2-5 shows a system block diagram.

TABLE 2-5: SYSTEM HARDWARE REQUIREMENTS

Qty	Hardware	Purpose
1	PC with: IR port (1) or PC with USB/Serial port and USB/Serial port to IR Dongle (1) and One serial port to communicate to the PICDEM HPC Explorer Demo Board.	As a Primary Device, this device will initiate communication to the MCP215X/40 Developer's Daughter Board. Also For Demo#3, the PC will also "talk" to the PICDEM™ HPC Explorer Demo Board (Encoder/Decoder board) via the serial port and a session of the HyperTerminal® program.
1	Serial Cable	To connect the PC serial ports to the PICDEM™ HPC Explorer Demo Board's serial port.
1	MCP215X/40 Developer's Daughter Board	This board being demonstrated.
1	PICDEM™ HPC Explorer Board or PICDEM™ FS USB Board	The MCP215X/40 Developer's Daughter Board will be installed into this board for demonstrated.
1	PICDEM™ HPC Explorer Demo Board Power Supplies (9V DC)	Used to power the PICDEM™ HPC Explorer Demo Boards. Programmed with the `00077 - HPC.asm` code.
1	MPLAB ICD2 Hardware	Allows you to program the PICmicro MCUs on either the PICDEM™ HPC Explorer Board or PICDEM™ FS USB Board.
1	MPLAB IDE Software	The Integrated Development Environment for developing PICmicro MCU programs and the programming the devices.

Note 1: This could be done with one or two PCs, depending on the features of the selected PC.

FIGURE 2-5: SYSTEM BLOCK DIAGRAM (1)

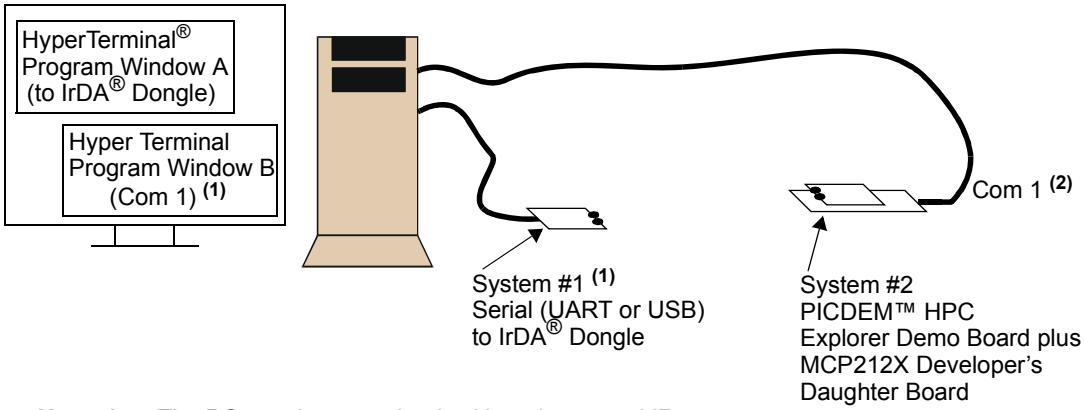

Note 1: The PC may be a notebook with an integrated IR port.

2: Only required if data is communicated with the PC. Some PICDEM™ HPC Explorer Demo Board program modes "respond" to received data (data not sent to PC).

2.4.1 The PICDEM™ Demo Board Firmware Overview

Two firmware programs are supplied with this board. `00077 - HPC.asm` is for the PICDEM HPC Explorer Demo Board, while `00077 - FS USB.asm` is for the PICDEM FS USB Demo Board.

The PICDEM HPC Explorer Demo Board supports three modes of operation:

1. Direct-to-PC.
2. Data Logger (250 byte data transfer).
3. Data Echo.

In Direct-to-PC mode, the data byte communicates between the MCP215X/40 Developer's Daughter Board and the PICDEM HPC Explorer Demo Board's DB-9 connector (does not communicate with the PIC18F8722). The PICDEM HPC Explorer Demo Board is only used for the USART circuitry and power.

In Data Logger mode, a string of 250 bytes is transferred to the Primary Device after a byte has been received.

In Data Echo mode, the data byte that is received is "echoed" in the opposite case (lowercase → uppercase and uppercase → lowercase).

The PICDEM FS USB Demo Board only supports Data Logger and Data Echo modes.

The source code for these programs is available for download from the Microchip web site (www.microchip.com), as well as being available on the CD-ROM supplied with the MCP215X/40 Developer's Daughter Board.

To use these programs, it is required that MPLAB® IDE software be installed on a computer and that one of Microchip's development tools are available to program the board (such as MPLAB® ICD 2).

© 2006 Microchip Technology Inc.

2.5 MCP215X/40 DEVELOPER'S DAUGHTER BOARD DESCRIPTION

The following sections describe each element of this daughter board in further detail.

2.5.1 Power

The MCP215X/40 Developer's Daughter Board is powered by a 5V supply. This voltage supply may be sourced via the PCB headers.

When the device is used in conjunction with the appropriate PICDEM Demo Board, the power is supplied via the connector interface. If the MCP215X/40 Developer's Daughter Board is jumpered into an application circuit via the HD1 and HD2 connectors, the device power supply must be brought over as well.

2.5.2 MCP215X/40 IrDA® Standard Protocol Handler with Encoder/Decoder Device

This demo board highlights the MCP2150, MCP2155 or MCP2140 IrDA Protocol Stack Controller device (U1) to demonstrate the implementation of an IR interface in an embedded system application. The MCP2150, MCP2155 and MCP2140 devices handle all IrDA standard protocol tasks (including the encoding/decoding of the UART/IR bit stream), while allowing the system designer to easily interface the device to a microcontroller via a standard UART port.

The IrDA standard protocol that the MCP215X and MCP2140 implement is the 9-wire "cooked" service class in the IrCOMM application layer protocol of the IrDA standard specification.

IrCOMM is the IrDA standard specification for the replacement of the communication ports (serial and parallel) of a PC. This allows the replacement of the serial cable with a wireless interface. The MCP215X and MCP2140 implements the entire protocol layer and the encoding/decoding of the UART/IR bit stream, while the Host Controller talks to the MCP215X or MCP2140 device as if it were a serial port with flow control.

The MCP215X operates as a Secondary device only, so it will not initiate IrDA standard communication with other IrDA standard devices (neither a Secondary or Primary device).

Appendix G. "MCP215X/40 Connection Sequence Overview" shows the connection sequence between a Primary device and the Secondary device. This connection sequence is shown at an overview level and does not show exact operation.

Further information on the Host Controller interface may be obtained from the device documentation:

- MCP2150 data sheet, *"IrDA® Standard Protocol Stack Controller Supporting DTE Applications"*, (DS21655)
- MCP2155 data sheet, *"IrDA® Standard Protocol Stack Controller Supporting DCE Applications"*, (DS21690)
- MCP2140 data sheet, *"IrDA® Standard Protocol Stack Controller with Fixed 9600 Baud Communications Rate"*, (DS21790)
- Application Note 858, *"Interfacing the MCP215X to a Host Controller"*, (DS00858)
- Application Note 927, *"Data Throughput and the MCP215X"* (DS00927)

2.5.2.1 MCP215X IrDA® PROTOCOL STACK CONTROLLER DEVICE

The key signals for the MCP2150-to-microcontroller (Host UART) interface are shown in Table 2-6, while Table 2-7 shows the same signals for the MCP2155. The operation of the Host UART interface is slightly different for the MCP2150 and the MCP2155.

The key signals for the MCP215X-to-IR transceiver circuit are shown in Table 2-8.

TABLE 2-6: MCP2150 HOST UART INTERFACE PINS

Pin Name	Pin Number (PDIP)	Pin Type	Buffer Type	Description
TX	8	I	TTL	Asynchronous receive; from Host Controller UART.
RX	9	O	—	Asynchronous transmit; to Host Controller UART.
RI	10	I	TTL	Ring Indicator. The value on this pin is driven high.
DSR	11	O	—	Data Set Ready. Indicates that the MCP2150 has completed reset: 1 = MCP2150 is initialized. 0 = MCP2150 is not initialized.
DTR	12	I	TTL	Data Terminal Ready. The value of this pin is ignored once the MCP2150 is initialized. It is recommended that this pin be connected so that the voltage level is either VSS or VCC. At device power-up, this signal is used with the RTS signal to enter device ID programming. 1 = Enter device ID programming mode (if RTS is cleared). 0 = Do not enter device ID programming mode.
CTS	13	O	—	Clear-to-Send. Indicates that the MCP2150 is ready to receive data from the Host Controller. This signal is locally emulated and not related to the CTS/RTS bit of the IrDA® standard Primary device. 1 = Host Controller should not send data. 0 = Host Controller may send data.
RTS	14	I	TTL	Request-to-Send. Indicates that a Host Controller is ready to receive data from the MCP2150. This signal is locally emulated and not related to the CTS/RTS bit of the IrDA® standard Primary device. 1 = Host Controller not ready to receive data. 0 = Host Controller ready to receive data. At device power-up, this signal is used with the DTR signal to enter device ID programming. 1 = Do not enter device ID programming mode. 0 = Enter device ID programming mode (if DTR is set).
CD	19	I	ST	Carrier Detect. Indicates that the MCP2150 has established a valid link with a Primary Device. 1 = An IR link has not been established (No IR Link). 0 = An IR link has been established (IR link).

Legend: TTL = TTL compatible input ST = Schmitt Trigger input with CMOS levels
I = Input O = Output

© 2006 Microchip Technology Inc.

TABLE 2-7: MCP2155 HOST UART INTERFACE PINS

Pin Name	Pin Number (PDIP)	Pin Type	Buffer Type	Description
TX	8	I	TTL	Asynchronous receive; from Host Controller UART.
RX	9	O	—	Asynchronous transmit; to Host Controller UART.
RI	10	I	TTL	Ring Indicator. The state of this bit is communicated to the IrDA® standard Primary device. 1 = No Ring Indicate Present. 0 = Ring Indicate Present.
DSR	11	O	—	Data Set Ready. Indicates that the MCP2150 has established a valid IrDA® standard link with a Primary device. This signal is locally emulated and not related to the DTR bit of the IrDA® standard Primary device. (**Note 1**) 1 = An IR link has not been established (No IR Link). 0 = An IR link has been established (IR link).
DTR	12	I	TTL	Data Terminal Ready. Indicates that the embedded device connected to the MCP2150 is ready for IR data. The state of this bit is communicated to the IrDA® standard Primary device, via the IrDA® standard DSR bit carried by IrCOMM. 1 = Embedded device not ready. 0 = Embedded device ready.
CTS	13	O	—	Clear-to-Send. Indicates that the MCP2150 is ready to receive data from the Host Controller. This signal is locally emulated and not related to the CTS/RTS bit of the IrDA® standard Primary device. 1 = Host Controller should not send data. 0 = Host Controller may send data.
RTS	14	I	TTL	Request-to-Send. Indicates that a Host Controller is ready to receive data from the MCP2150. This signal is locally emulated and not related to the CTS/RTS bit of the IrDA® standard Primary device. 1 = Host Controller not ready to receive data. 0 = Host Controller ready to receive data.
CD	19	I	ST	Carrier Detect. The state of this bit is communicated to the IrDA® standard Primary device via the IrDA® standard CD bit. 1 = No Carrier Present. 0 = Carrier Present.

Legend: TTL = TTL compatible input ST = Schmitt Trigger input with CMOS levels
I = Input O = Output

Note 1: The state of the DTR output pin does not reflect the state of the DTR bit of the IrDA® standard Primary device.

TABLE 2-8: MCP2150 AND MCP2155 IR INTERFACE PINS

Pin Name	Pin Number (PDIP)	Pin Type	Buffer Type	Description
TXIR	2	O	—	Asynchronous transmit to IrDA® standard transceiver.
RXIR	3	I	ST	Asynchronous receive from Infrared transceiver.

Legend: A = Analog P = Power
I = Input O = Output

2.5.2.1.1 Additional MCP215X Interface Signals

In addition to the signals described in Table 2-7 and Table 2-8, there are two additional signals that could be under Host Controller control. These are:

1. The RESET signal.
2. The EN signal.

The MCP215X RESET pin is connected to an I/O pin of the Host Controller. The H1/H3 headers each have the RESET signal connected to two pins, RA5 and RC3. The Host Controller determines when the MCP215X device needs to be reset.

The MCP215X EN input can be either hard-wired (jumper JP5) or controlled by the Host Controller. The H1/H3 headers each have the EN signal connected to the RB3 pin.

© 2006 Microchip Technology Inc.

2.5.2.2 MCP2140 IrDA® PROTOCOL STACK CONTROLLER DEVICE

The key signals for the MCP2140-to-microcontroller (Host UART) interface are shown in Table 2-9. The key signals for the MCP2140-to-IR transceiver circuit are shown in Table 2-10. Further information on the Host Controller interface may be obtained from the MCP2140 data sheet, (DS21790).

TABLE 2-9: MCP2140 HOST UART INTERFACE PINS

Pin Name	Pin Number (SSOP)	Pin Type	Buffer Type	Description
TX	8	I	TTL	Asynchronous receive; from Host Controller UART.
RX	9	O	—	Asynchronous transmit; to Host Controller UART.
RI	10	I	TTL	Ring Indicator. The state of this bit is communicated to the IrDA® standard Primary device. 1 = No Ring Indicate Present. 0 = Ring Indicate Present.
DSR	11	O	—	Data Set Ready. Indicates that the MCP2150 has established a valid infrared link with a Primary device. This signal is locally emulated and not related to the DTR bit of the IrDA® standard Primary device. (**Note 1**) 1 = An IR link has not been established (No IR Link). 0 = An IR link has been established (IR Link).
DTR	12	I	TTL	Data Terminal Ready. Indicates that the embedded device connected to the MCP2150 is ready for IR data. The state of this bit is communicated to the IrDA® Primary device, via the IrDA® standard DSR bit carried by IrCOMM. 1 = Embedded device not ready. 0 = Embedded device ready.
CTS	13	O	—	Clear to Send. Indicates that the MCP2150 is ready to receive data from the Host Controller. This signal is locally emulated and not related to the CTS/RTS bit of the IrDA® standard Primary device. 1 = Host Controller should not send data. 0 = Host Controller may send data.
RTS	14	I	TTL	Request to Send. Indicates that a Host Controller is ready to receive data from the MCP2150. This signal is locally emulated and not related to the CTS/RTS bit of the IrDA® standard Primary device. 1 = Host Controller not ready to receive data. 0 = Host Controller ready to receive data.
CD	19	I	ST	Carrier Detect. The state of this bit is communicated to the IrDA® standard Primary device via the IrDA® standard CD bit. 1 = No Carrier Present. 0 = Carrier Present.

Legend: TTL = TTL compatible input ST = Schmitt Trigger input with CMOS levels
I = Input O = Output

Note 1: The state of the DTR output pin does not reflect the state of the DTR bit of the IrDA® standard Primary device.

TABLE 2-10: MCP2140 IR INTERFACE PINS

Pin Name	Pin Number (SSOP)	Pin Type	Buffer Type	Description
RXPDREF	1	I	A	IR Receive Photo Detect Diode reference voltage. This voltage will typically be in the range of VDD/2.
TXIR	2	O	—	Asynchronous transmit to IrDA® standard transceiver.
RXPD	20	I	A	IR RX Photo Detect Diode input. This input signal is required to be a pulse to indicate an IR bit. When the amplitude of the signal crosses the amplitude threshold set by the RXPDREF pin, the IR bit is detected. The pulse has minimum and maximum requirements as specified in the MCP2140 data sheet, Electrical Characteristics table, Parameter IR131A.

Legend: A = Analog, I = Input, P = Power, O = Output

2.5.2.2.1 Additional MCP215X Interface Signals

In addition to the signals described in Table 2-9 and Table 2-10, there are two additional signals that can be used by the Host Controller. These are:

1. The RESET signal.
2. The PHACT (Protocol Handler Active) signal.

The MCP2140 RESET pin is connected to an I/O pin of the Host Controller. The H1/H3 headers each have the RESET signal connected to two pins, RA5 and RC3. The Host Controller determines when the MCP215X device needs to be reset.

The MCP2140 PHACT (Protocol Handler Active) output signal indicates the current mode the MCP2140 IrDA® standard protocol controller state machine is in (0 = NDM or Low-power mode, 1 = Discovery or NRM). An LED (D4) can be jumpered to the MCP2140's PHACT pin. This is done with jumper JMP3. The PHACT signal is not connected to the H1/H3 headers.

© 2006 Microchip Technology Inc.

2.5.3 IR Transceiver Circuit

The IR transceiver circuit uses a Vishay® TFDU 4300 integrated optical transceiver.

Footprints for an optional optical transceiver are implemented. These footprints are for the Vishay TFDU 4100 and the Agilent® HSDL-3000. Jumpers are used to allow all three implementations to be installed, but with only one connected to the MCP215X or MCP2140 TXIR and RXIR pins.

The MCP2140 also requires the Optical Transceivers's RXD signal to be conditioned to be used as the input to the MCP2140's RXPD/RXPDREF signals.

2.5.3.1 PCB MODIFICATIONS FOR AN ALTERNATE OPTICAL TRANSCEIVER

If you wish to test with either of the other optical transceivers, the TFDU 4300's RXD and TXD signals need to be electrically removed. This is done by cutting the trace between the jumper JP1C pins and the trace between the jumper JP2C pins. This location is shown in Figure 2-6.

Also the components for the desired optical transceiver need to be installed. See **Appendix B. "Bill of Materials (BOM)"**.

FIGURE 2-6: PCB MODIFICATION WHEN USING AN ALTERNATE OPTICAL TRANSCEIVER

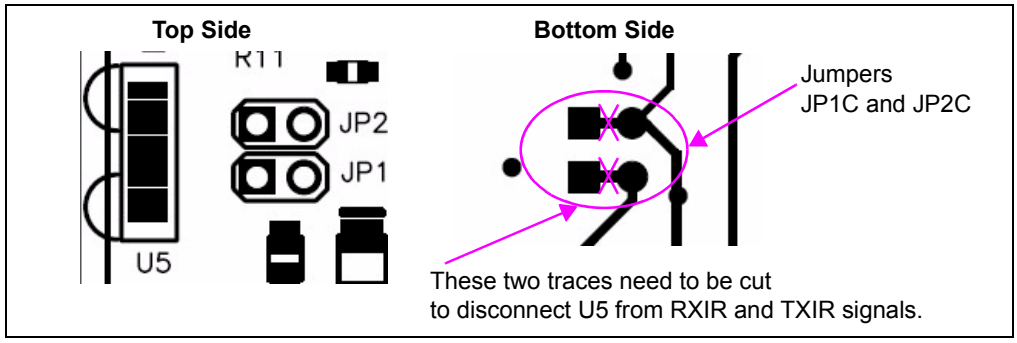

2.5.3.2 MCP2140 WAVESHAPING CIRCUITRY

If the MCP2140 is to be used, then the Optical Transceivers's RXD signal needs to be conditioned to be used as the input to the MCP2140's RXPD/RXPDREF signals.

Figure 2-7 shows the circuit that is used to shape the waveform of the optical Transceiver's RXD output. This is done to ensure that the RXD pulse width does not exceed the specifications of the MCP2140 RXPD input (IR131A) (refer to Parameter IR131A in the MCP2140 Data Sheet, DS21790). The resistor divider R18 and R13 sets the RXPDREF reference threshold. Transistor Q6 (MMUN2111LT1) has internal resistors. If you wish to evaluate a simple PNP device, Q6 can be replaced and resistors for R15 and R20 may need to be added. If R20 is added, do not forget to cut the trace that shorts out the resistor. Modifications to this waveshaping circuit may be required depending on your operating requirements (voltage, temperature, etc.).

FIGURE 2-7: MCP2140 RXPD WAVEFORM SHAPING CIRCUIT

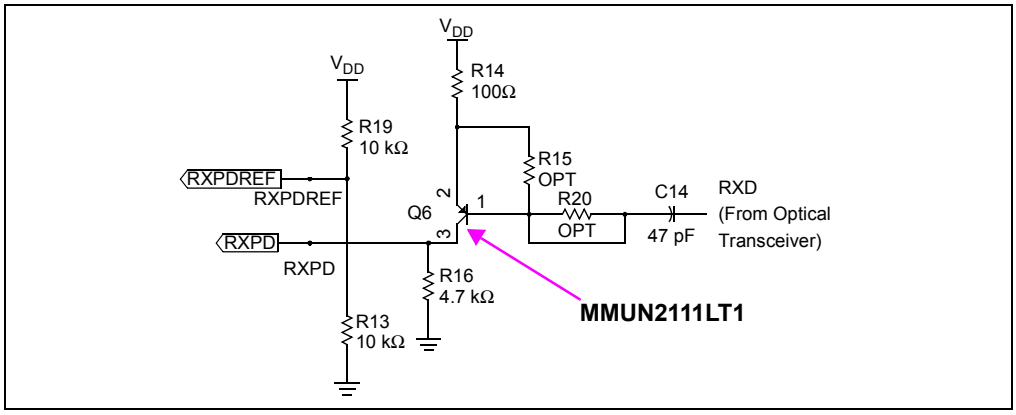

2.5.4 Signal Header

To allow easy access to many of the system signals, two headers (HD1 and HD2) are on one of the edges of the board. This allows the signals from the MCP215X or MCP2140 to be easily accessed and connected into an existing application for initial development or proof-of-concept.

FIGURE 2-8: 14-PIN SIGNAL INTERFACE HEADER HD1

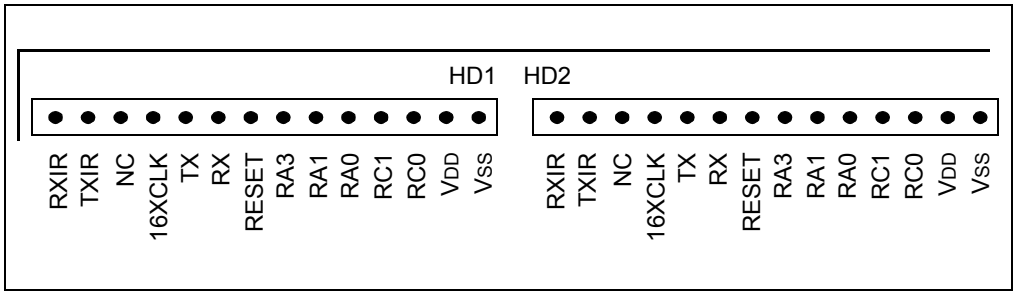

© 2006 Microchip Technology Inc.

Appendix A. Schematic and Layouts

A.1 INTRODUCTION

This appendix contains the following schematics and layouts for the MCP212X Developer's Daughter Board:

- Board Schematic – Headers and Jumpers
- Board Schematic – Circuitry
- Board Schematic – Circuitry
- Board – Component Layer
- Board – Top Layer
- Board – Bottom Layer
- Board – Power Layer
- Board – Ground Layer

A.2 SCHEMATICS AND PCB LAYOUT

The layer order is shown in Figure A-1.

FIGURE A-1: LAYER ORDER

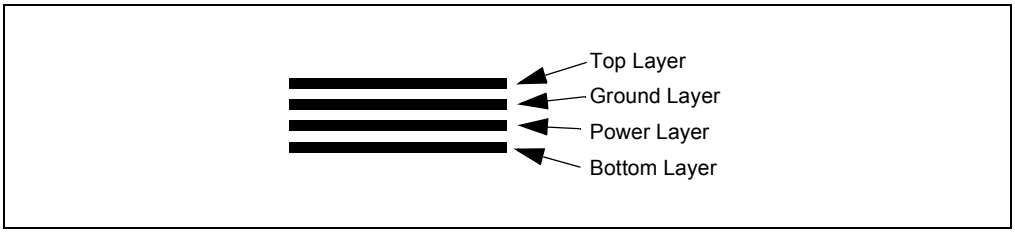

A.3 SCHEMATIC (HEADERS AND JUMPERS) – PAGE 1

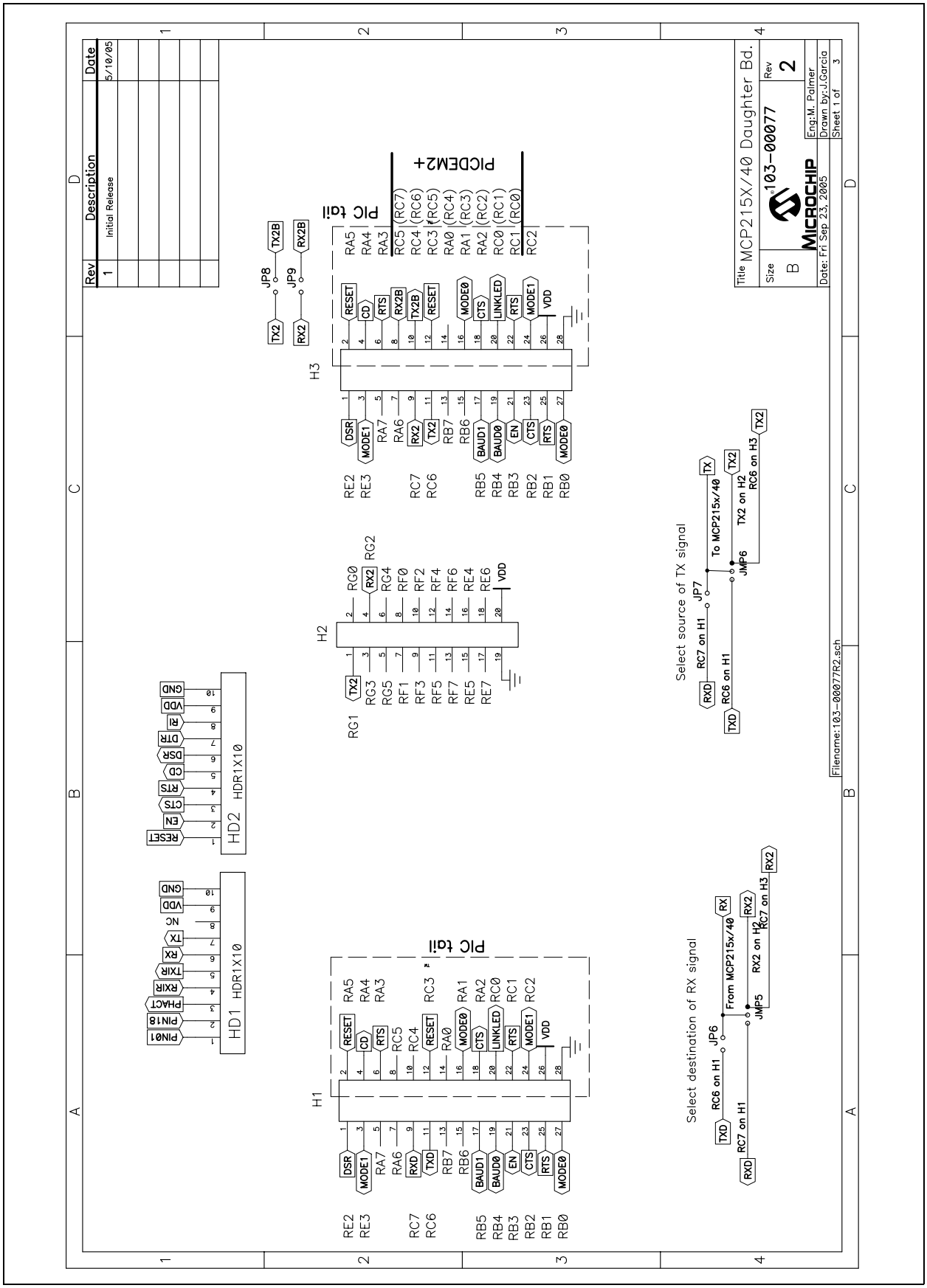

© 2006 Microchip Technology Inc.

A.4 SCHEMATIC (CIRCUITRY) – PAGE 2

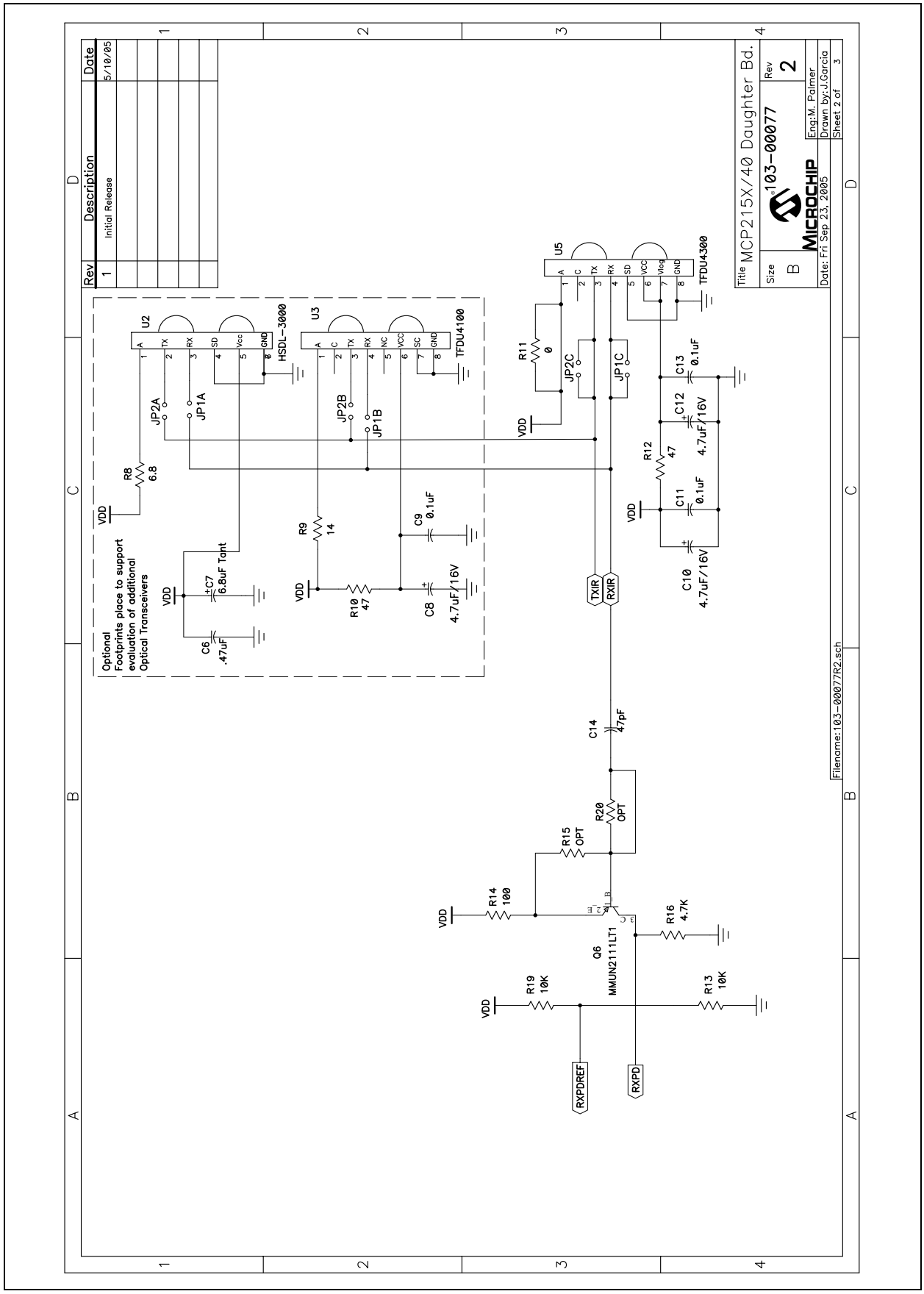

A.5 SCHEMATIC (CIRCUITRY) – PAGE 3

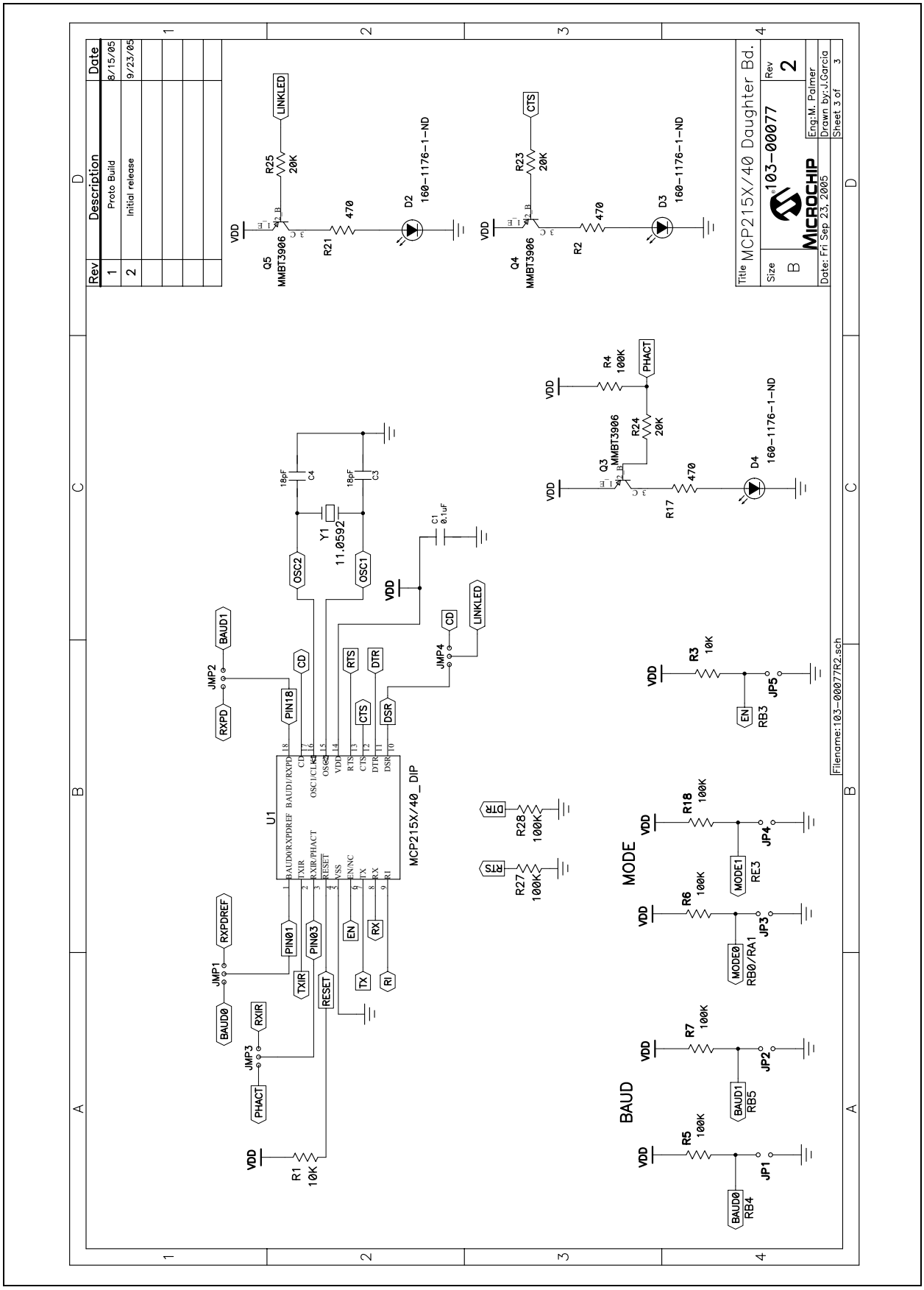

© 2006 Microchip Technology Inc.

A.6 BOARD LAYOUT – COMPONENT LAYER

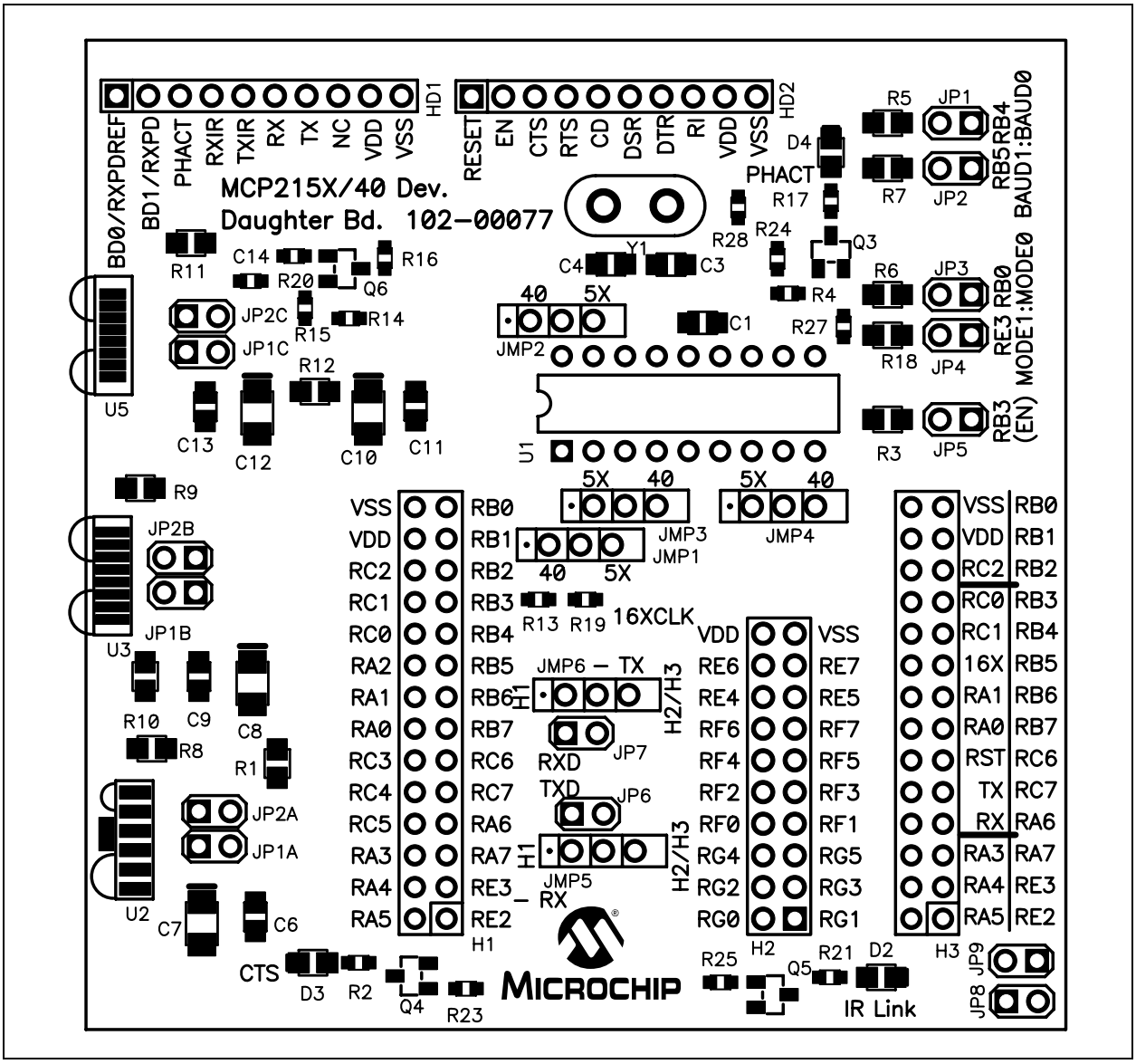

A.7 BOARD LAYOUT – TOP LAYER

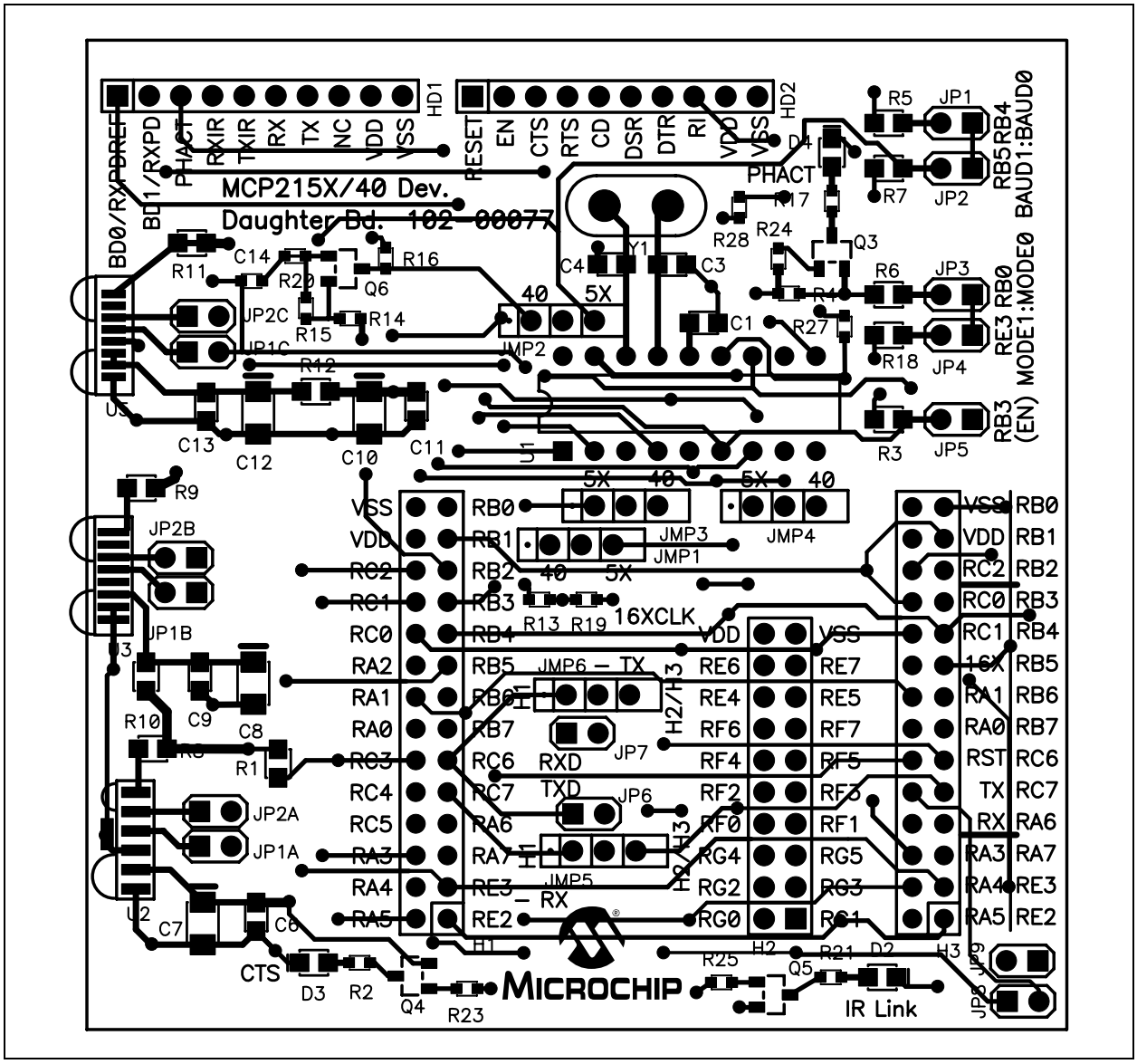

© 2006 Microchip Technology Inc.

A.8 BOARD LAYOUT – BOTTOM LAYER

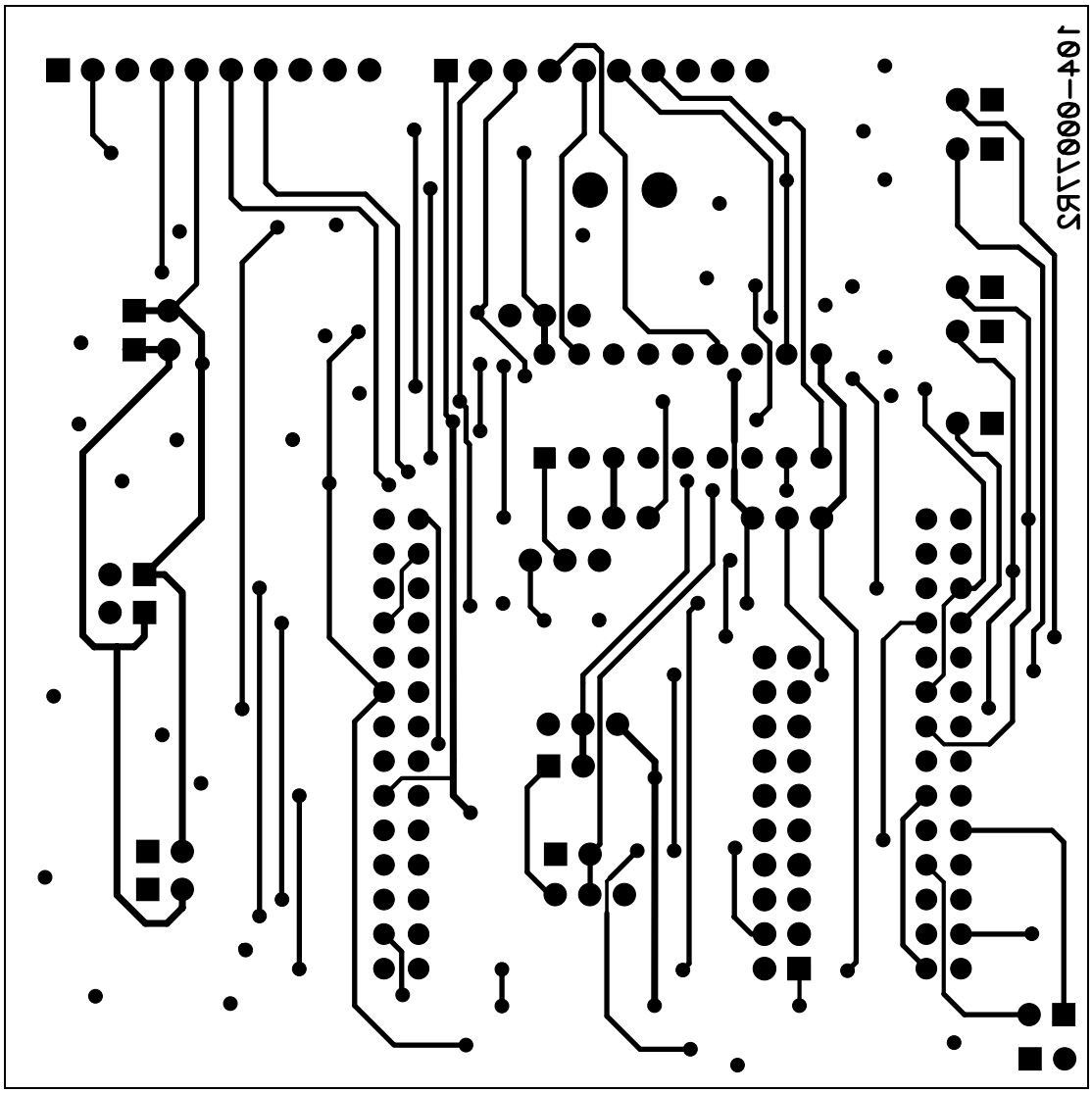

A.9 BOARD LAYOUT – POWER LAYER

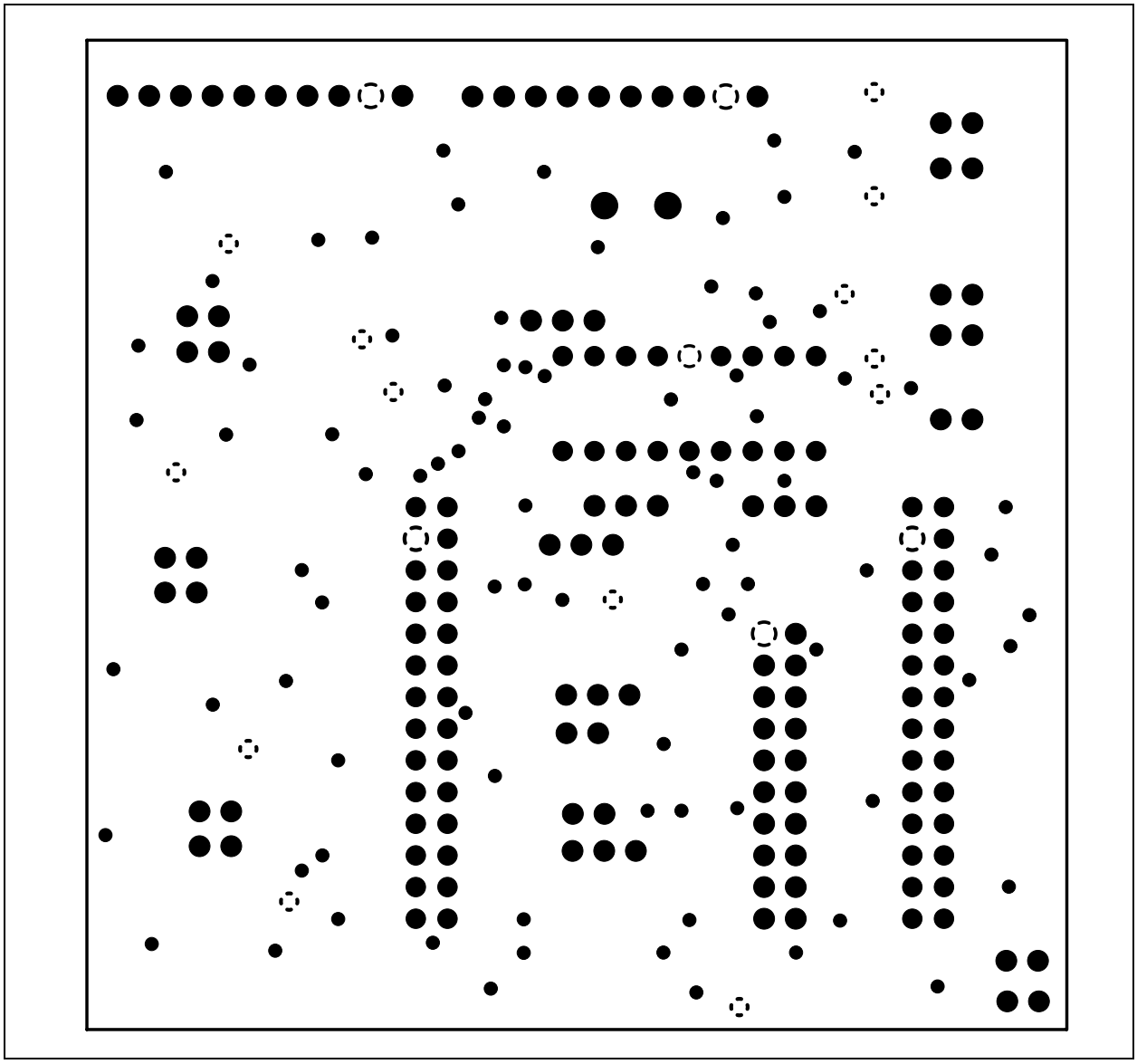

© 2006 Microchip Technology Inc.

A.10 BOARD LAYOUT – GROUND LAYER

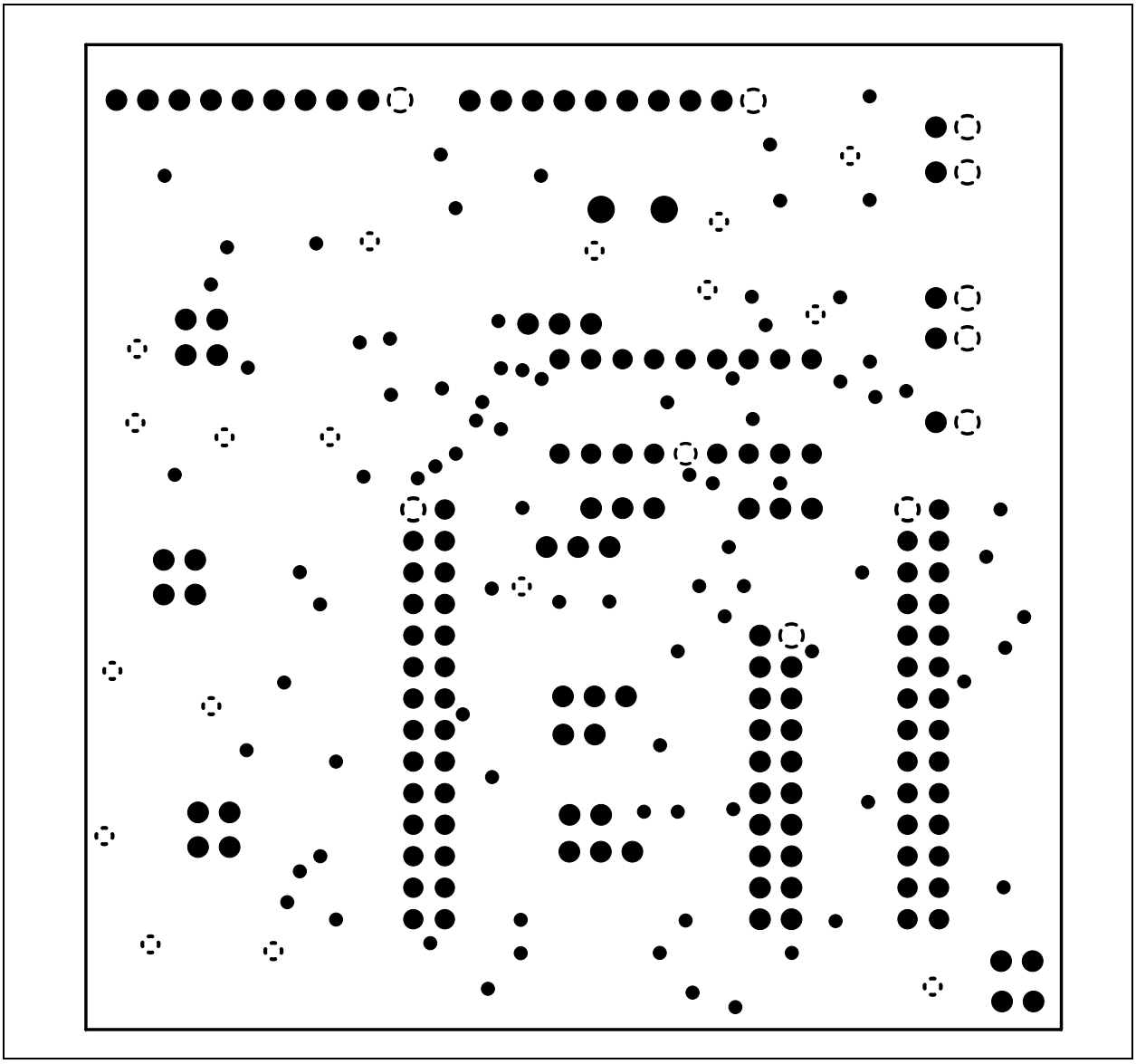

NOTES:

© 2006 Microchip Technology Inc.

Appendix B. Bill of Materials (BOM)

The MCP215X/40 Developer's Daughter Board allows the MCP2120 or MCP2122 device to be evaluated. The board also allows the customer to evaluate the operation of one of three optical tranceiver devices.

Table B-1 shows the components that are installed in the MCP215X/40 Developer's Daughter Board PCB, while Table B-2 shows the components that are NOT installed on the MCP215X/40 Developer's Daughter Board PCB.

TABLE B-1: BOM – COMPONENTS INSTALLED

Qty	Reference	Description	Manufacturer	Part Number
4	C1, C2, C11, C13	0.1 µF (SMT)	Panasonic® - ECG	ECJ-2VB1C104K
2	C3, C4	18 pF (SMT)	Yageo® America	0805CG180J9B200
2	C10, C12	4.7 µF/16V (SMT)	Panasonic - ECG	ECS-T1AY475R
1	C14	CAP Ceramic 47PF 50V 0603 SMD	Panasonic - ECG	ECJ-1VC1H470J
2	H1, H3	2x14 Male connector Header	Jameco Valuepro	2012-254-2X14SG
1	H2	2x10 Male connector Header	Jameco Valuepro	7000-2X10SG
2	HD1, HD2	1x10 Male connector Header	Jameco Valuepro	7000-1X10SG
6	JMP1, JMP2, JMP3, JMP4, JMP5, JMP6	1x3 Jumper Stakes (Male)	Jameco Valuepro	7000-1x3SG
9	JP1, JP2, JP3, JP4, JP5, JP6, JP7, JP8, JP9	1x2 Jumper Stakes (Male)	Jameco Valuepro	7000-1x2SG
4	R3, R13, R19	10 kΩ (SMT)	Panasonic - ECG	ERJ-6ENF1002V
	R2, R17, R21	470Ω (SMT)	Panasonic - ECG	ERJ-3GEYJ471V
4	R4, R5, R6, R7, R18, R27, R28	100 kΩ (SMT)	Panasonic - ECG	ERJ-6ENF1003V
1	R12	47Ω (SMT)	Panasonic - ECG	ERJ-6ENF47R5V
1	R14	100Ω (SMT)	Panasonic - ECG	ERJ-3GEYJ101V
1	R16	4.7 kΩ (SMT)	Panasonic - ECG	ERJ-3GEYJ472V
3	R23, R24, R25	20 kΩ (SMT)	Panasonic - ECG	ERJ-3GEYJ203V
1	Q6	MMUN2111LT1 transistors, RF Bipolar ROHS compliant	ON® Semiconductor	MMUN2111LT1
	Q3, Q4, Q5	TRANSISTOR GP PNP AMP SOT-23	Fairchild® Semiconductor	MMBT3906
	D2, D3, D4	LED (160-1176-1-ND)		
1	U1	Low Profile Socket (18 Pin)	Jameco Valuepro	6100-18
1		MCP2150 (provided)	Microchip Technology Inc.	MCP2150-I/P
1	U5	TFDU-4300	Vishay® Intertechnology	TFDU-4300
2	Y1	PIN RECPT .015/.025 DIA 0667 SER	Manufacturing Corp	0667-0-15-01-30-27-10-0
1		Crystal OscillatorCRY, 11.05 MHz, 50 PPM SERIES	Vishay Intertechnology	CY11.0592

TABLE B-1: BOM – COMPONENTS INSTALLED (CONTINUED)

Qty	Reference	Description	Manufacturer	Part Number
1	—	PCB 105-00063 (R2 or greater)	Microchip Technology Inc.	
8	—	Jumper Shunt (used on JP1, JP2, JP3, JP4, JP6, JP7, JMP1, JMP2, JMP3, and JMP4)	Jameco Valuepro	2012JH

TABLE B-2: BOM – OPTIONAL COMPONENTS, NOT INSTALLED

Qty	Reference	Description	Manufacturer	Part Number
0	C6	CAP CER .47UF 25V Y5V 0805	Murata® Electronics	GRM216F51E474ZA01D
0	C7	CAP TANTALUM 6.8UF 16V 20% SMD	Nichicon® Corporation	F931C685MAA
0	C8	4.7 µF/16V (SMT)		
0	C9	0.1 µF (SMT)	Panasonic® - ECG	ECJ-2VB1C104K
0	JP1A, JP1B, JP1C, JP2A, JP2B, JP2C	1x2 Jumper Stakes (Male)	Jameco Valuepro	7000-1x2SG
0	R1	RES 10.0K OHM 1/10W 1% 0805 SMD (Not populated)	Panasonic - ECG	ERJ-6ENF1002V
0	R8	RES 6.8 OHM 1/8W 5% 0805 (Not populated)	Panasonic - ECG	ERJ-6GEYJ6R8V
0	R9	RES 14.0 OHM 1/10W 1% 0805 SMD (Not populated)	Panasonic - ECG	ERJ-6ENF14R0V
0	R10	RES 47.5 OHM 1/10W 1% 0805 SMD (Not populated)	Panasonic - ECG	ERJ-6ENF47R5V
0	R11	RES 0.0 OHM 1/8W 5% 0805 SMD (Not populated)	Panasonic - ECG	ERJ-6GEY0R00V
0	U2	HSDL-3000 (Not populated)	Agilent®	HSDL-3000
0	U3	TFDU-4100 (Not populated)	Vishay® Intertechnology	TFDU-4100
0	—	Jumper Shunt, used on: * JP1A and JP2A, or * JP1B and JP2B, or * JP1C and JP2C * JP5 * JP8 and JP9	Jameco Valuepro	2012JH

© 2006 Microchip Technology Inc.

Appendix C. Board Testing

C.1 INTRODUCTION

The MCP215X/40 Developer's Daughter Board can be used in multiple configurations. Only a subset of these configurations will be tested. The tests were performed at 9600 baud. Other baud rates are not tested.

TABLE C-1: MCP215X/40 DEVELOPER'S DAUGHTER BOARD TESTED CONFIGURATIONS

Baud Rate	Mode	EN	JMP1, JMP2, JMP3, JMP4	MCP215x/40 RX/TX Destination		JP8:JP9	Comment
JP2:JP1	JP3:JP4	JP5		RX JMP5/JP6	TX JMP6/JP7		
S:S	O:O	O	2-3, 2-3, 1-2, 1-2	2-3 (JMP5)	2-3 (JMP6)	O:O	9600 baud, **MCP2150** to **PIC18F8772** UART2 on Header 2 (250 byte transfer)
O:O	O:S	O	2-3, 2-3, 1-2, 1-2	2-3 (JMP5)	2-3 (JMP6)	O:O	9600 baud, **MCP2150** to **PIC18F8772** UART2 on Header 2 (Echo mode)
S:S	S:S	O	2-3, 2-3, 1-2, 1-2	S (JP6)	S (JP7)	O:O	9600 baud, **MCP2150** to DB9 (PC) on Header 1

Legend: O = Jumper is "Open" S = Jumper is "Shorted"
1-2 = Pin 1 is shorted to Pin 2 (of 3 pin header)
2-3 = Pin 2 is shorted to Pin 3 (of 3 pin header)

C.2 WHAT IS TESTED

The following portions of the board are tested:

- **MCP2150**
- TFDU-4300 (U5) and circuitry
- Header 1 – TXD and RXD signals
- Header 2 – TX2 and RX2 signals
- Y1 circuitry (11.0592 MHz)
- JP3, JP4, JP6, and JP7
- JMP1 (P2 – P3)
- JMP2 (P2 – P3)
- JMP3 (P1 – P2)
- JMP4 (P1 – P2)
- JMP5 (P2 – P3)
- JMP6 (P2 – P3)

C.3 WHAT IS NOT TESTED

The following portions of the board are NOT tested:

- **MCP2140** and crystal circuitry (7. 3728 MHz)
- **MCP2140** waveform shaping circuitry
- TFDU-4100 (U3) and circuitry
- HSDL-3000 (U2) and circuitry
- Header H3
- JP1, JP2, JP5, JP8, and JP9
- JMP1 (P1 – P2)
- JMP2 (P1 – P2)
- JMP3 (P2 – P3)
- JMP4 (P2 – P3)
- JMP5 (P1 – P2)
- JMP6 (P1 – P2)
- Headers HD1 and HD2
- JP1 & JP2 (Baud1:Baud0) Pull-up Resistors
- JP5 (EN) Pull-up Resistors

© 2006 Microchip Technology Inc.

Appendix D. Using the MCP215X/40 Developer's Daughter Board with the PICDEM™ HPC Explorer Demo Board

D.1 DEMONSTRATION USING THE PICDEM™ HPC EXPLORER DEMO BOARD

To perform a demonstration of the MCP215X/40 Developer's Daughter Board, two systems are needed. A Primary Device and a Secondary Device (the embedded system).

The embedded system (Secondary Device) is a MCP215X/40 Developer's Daughter Board (MCP212XEV-DB) plus the PICDEM HPC Explorer Demo Board (DM183022).

The Primary Device is either a PC with IR Port (or IR Dongle) or a PDA.

There are four presentations of running the demos. These are:

1. PC Demos using HyperTerminal.
2. Palm PDA Demo using the AN888 Application Program.
3. Pocket PC PDA Demo using the AN926 Application Program.
4. Window XP PC with an IrDA Standard Port Demo using the AN941 Application Program.

The PC Demos using HyperTerminal shows all three PICDEM HPC Explorer Demo Board program modes, while those using the Application Note programs only show the Data Logger (250 Byte) program mode. The steps to configure HyperTerminal is shown in **Appendix F. "Configuring the HyperTerminal® Program"**.

Figure D-1 shows a block diagram of a PC-based demonstration system.

FIGURE D-1: SYSTEM BLOCK DIAGRAM

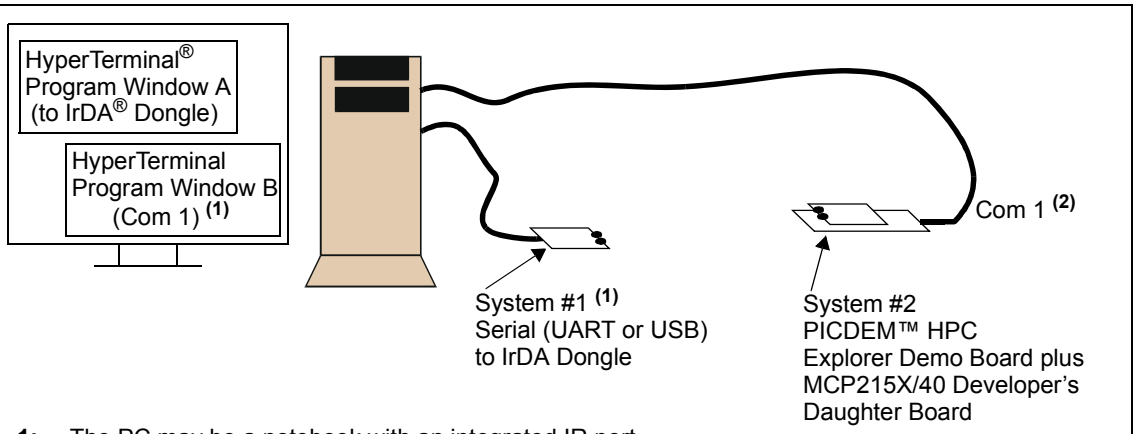

Note 1: The PC may be a notebook with an integrated IR port.

2: Only required if data is communicated with the PC. Some program modes "respond" to received data (data not sent to PC).

D.1.1 The PICDEM™ HPC Explorer Demo Board

The PICDEM HPC Explorer Demo Board firmware for these demos is available on the Microchip web site, as well as on the AIPD Evaluation Board CD-ROM. The filename is `00077 - HPC.asm`. This code must be programmed into the PICDEM HPC Explorer Demo Board's PIC18F8722 for demo operation. This code supports three demos. The demo executed is dependent on the state of the JP3:JP4 jumpers.

Note: Other PICDEM Demo Boards may be used, but appropriate firmware needs to be installed to demonstrate the system.

The crystal frequency of the PICDEM Demo Board determines the error rates for the EUSART baud rates. So for the PICDEM HPC Explorer Demo Board, the default crystal is 10 MHz (does have a 4x PLL). Therefore, the 16XCLK frequency for 115200 baud has an error outside usable limits for IrDA standard communication for both 10 MHz and 40 MHz operation (see Table D-1). Table D-1 shows the SPBRG values for the EUSART at different crystal frequencies.

TABLE D-1: SPBRG VALUES FOR EUSART(1)

Desired Baud Rate	@ 40 MHz(2)		@ 20 MHz(2)		@ 14.7592 MHz(2)		@ 10 MHz(2)		@ 7.3728 MHz(2)	
	SPBRG(3)	%Error	SPBRG(3)	%Error	SPBRG(3)	%Error	SPBRG(3)	%Error	SPBRG(3)	%Error
9600	225	-1.73%	129	-0.16%	95	0%	64	-0.16%	47	0%
19200	129	-0.16%	64	-0.16%	47	0%	32	1.36%	23	0%
57600	42	-0.94%	21	1.36%	15	0%	10	1.36%	7	0%
115200	21	1.36%	10	1.36%	7	0%	4	-8.51%	3	0%

Note 1: Shaded values indicate a % error that is larger than should be used.

2: The following shows the PICDEM™ Demo Board device frequencies:
PICDEM™ HPC Explorer Demo Board has a 10 MHz crystal installed (4xPLL -> 40 MHz).
PICDEM™ FS USB Demo Board has a 20 MHz crystal installed.
PICDEM™ 2 Plus Demo Board has a 4 MHz crystal installed.
PICDEM™ LCD has a socket for an external canned oscillator (also has an internal 8 MHz RC).

3: SYNC = 0, BRGH = 1, BRG16 = 0.

Note: The demo code (`00077 - HPC.asm`) has been written for the PICDEM HPC board with a 10 MHz crystal. There is also a version (`00077 HPC 14MHz.asm`) that is for the PICDEM HPC using a 14.7592 MHz crystal. This requires the PICDEM HPC crystal to be changed. This change allows all MCP215X baud rates to be supported.

© 2006 Microchip Technology Inc.

D.1.2 PC Demos using HyperTerminal

When using a PC with HyperTerminal as the Primary Device interface, all three PICDEM HPC Explorer Demo Board programs can be demonstrated. These are shown in:

1. **Section D.1.2.1 "Demo #1 Operation - 250 Byte Transfer Mode"**
2. **Section D.1.2.2 "Demo #2 Operation - Echo Mode"**.
3. **Section D.1.2.3 "Demo #3 Operation - Direct to UART (DB-9) Mode"**.

Note: HyperTerminal should be disabled before establishing a connection between the PC and the MCP215X/40 Developer's Daughter Board. Make sure that any other programs (e.g., HotSync®) connected to the IR ports are disabled.

D.1.2.1 DEMO #1 OPERATION - 250 BYTE TRANSFER MODE

In Demo #1, the System 2 unit will receive a character and then stream 250 bytes of data (25 lines of 8 alphanumeric characters plus the return and line feed characters, for a total of 10 characters per line).

The System #1 unit is connected to the PC, while the System #2 unit is not required to be connected, though it still needs to be powered. The PICDEM HPC Explorer Demo Board is used to determine the communication baud rate (115,200) via the JP2 and JP1 jumper states. Given this state, the PICmicro® MCU can then configure the MCP2150 UART baud rate. Power is supplied over the H1 and H2 interface headers. Jumpers JP3 and JP4 are used to select which demo program to run. Figure D-3 shows the jumper configuration for Demo #1.

Table D-2 shows the steps for Demo #1.

FIGURE D-2: DEMO #1 SYSTEM BLOCK DIAGRAM (1)

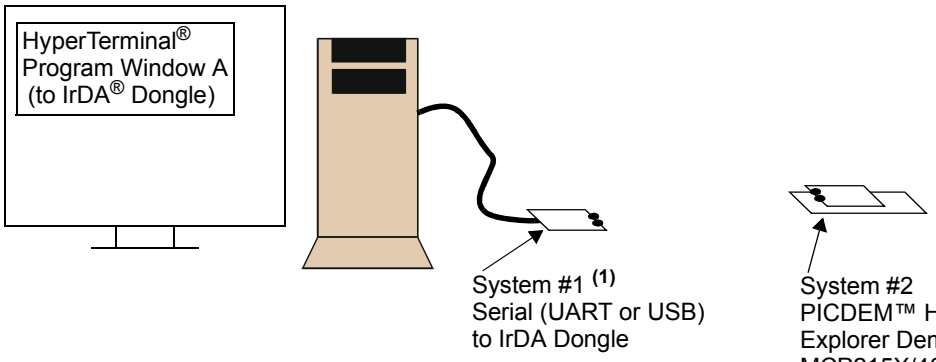

Note 1: The PC may be a notebook with an integrated IR port.

FIGURE D-3: DEMO #1 CONFIGURATION - 250 BYTE TRANSFER MODE

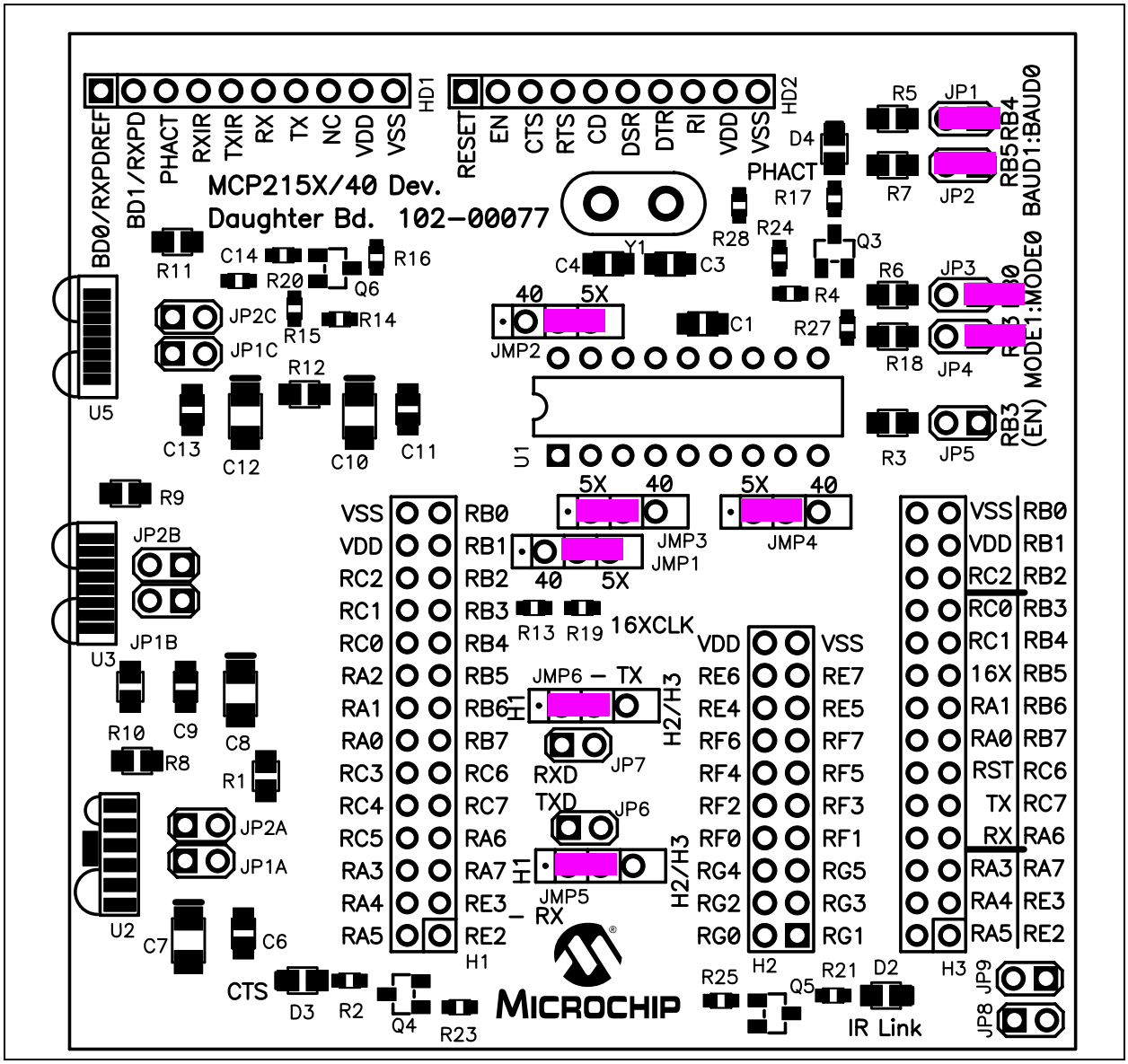

© 2006 Microchip Technology Inc.

TABLE D-2: DEMO #1 STEPS

Step	Action	Result
1	Place both devices on a flat surface about 25 cm (10") apart, and with the IR ports facing each other.	—
2	***On the System #1 Unit (IR Dongle):*** Connect Serial to IR dongle to PC. Ensure that device supports the IrCOMM 9-wire "cooked" service class.	**—**
3	***On the PICDEM™ HPC Explorer Demo Board plus MCP215X/40 Developer's Daughter Board:*** Insert the MCP215X/40 Developer's Daughter Board into the PICDEM HPC Explorer Demo Board. Ensure that the jumpers are configured as in Figure D-3.	**—**
4	***On the PICDEM HPC Explorer Demo Board plus MCP215X/40 Developer's Daughter Board:*** Apply power to the unit via the 9V power supply.	***On the PICDEM HPC Explorer Demo Board plus MCP215X/40 Developer's Daughter Board:*** The green power LED (D) will turn on.
5	***On the PICDEM HPC Explorer Demo Board plus MCP215X/40 Developer's Daughter Board:*** Depress and release the RESET Switch (S2 – $\overline{\text{MCLR}}$).	—
6	***On the PC:*** Wait for the PC to make a sound and the system tray shows an IR icon. Placing the mouse over the icon will show the MCP2150 Device ID ("Generic IrDA®").	**—**
7	***On the PC:*** Open the HyperTerminal® program window for the Primary Device (such as COM 7). Ensure that the window indicates that the HyperTerminal program is connected.	***On the PICDEM HPC Explorer Demo Board plus MCP215X/40 Developer's Daughter Board:*** The "IR Link" LED will turn on and the "CTS" LED will strobe rapidly and then return to the normal rate. ***On the PC:*** The system tray icon will change from a single IR icon to two IR icons facing each other. An IR Link is now established.
8	***On the PC:*** In the HyperTerminal program window, type a character.	***On the PC:*** The HyperTerminal window will display 25 rows with 8 alpha numeric characters.
9	***On the PC:*** After each 250 byte transfer completes, another character may be typed in the HyperTerminal program window.	***On the PC:*** The typed alpha character will cause a 250 byte packet to be transferred back to the PC. The HyperTerminal window will display 25 rows with 8 alpha numeric characters. **Note:** The `00077 - HPC.asm` program only expects to receive 1 byte per IR packet.
10	Step 9 may be repeated.	—
11	***On the PC:*** "Disconnect" the HyperTerminal program window for the Primary Device (such as COM 7).	***On the PC:*** The IR icon in the system tray will show that the link has been disconnected.

D.1.2.2 DEMO #2 OPERATION - ECHO MODE

In Demo #2, the System #2 unit will echo any alpha character received, changing the case of the character (lowercase to uppercase/uppercase to lowercase).

The System #1 unit is connected to the PC, while the System #2 unit is not required to be connected, though it still needs to be powered. The PICDEM HPC Explorer Demo Board is used to determine the communication baud rate (115,200) via the JP2 and JP1 jumper states. Given this state, the PICmicro MCU can then configure the MCP2150 UART baud rate. Power is supplied over the H1 and H2 interface headers. Jumpers JP3 and JP4 are used to select which demo program to run. Figure D-5 shows the jumper configuration for Demo #1.

Table D-3 shows the steps for Demo #2.

FIGURE D-4: DEMO #2 SYSTEM BLOCK DIAGRAM (1)

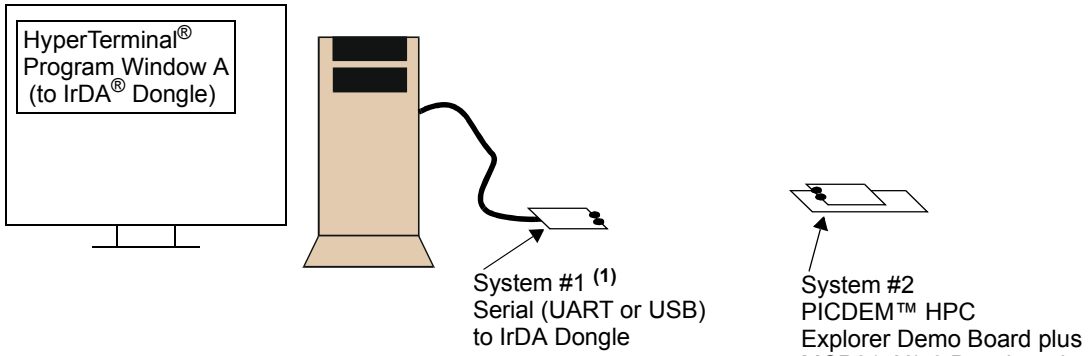

Note 1: The PC may be a notebook with an integrated IR port.

© 2006 Microchip Technology Inc.

FIGURE D-5: DEMO #2 CONFIGURATION - ECHO MODE

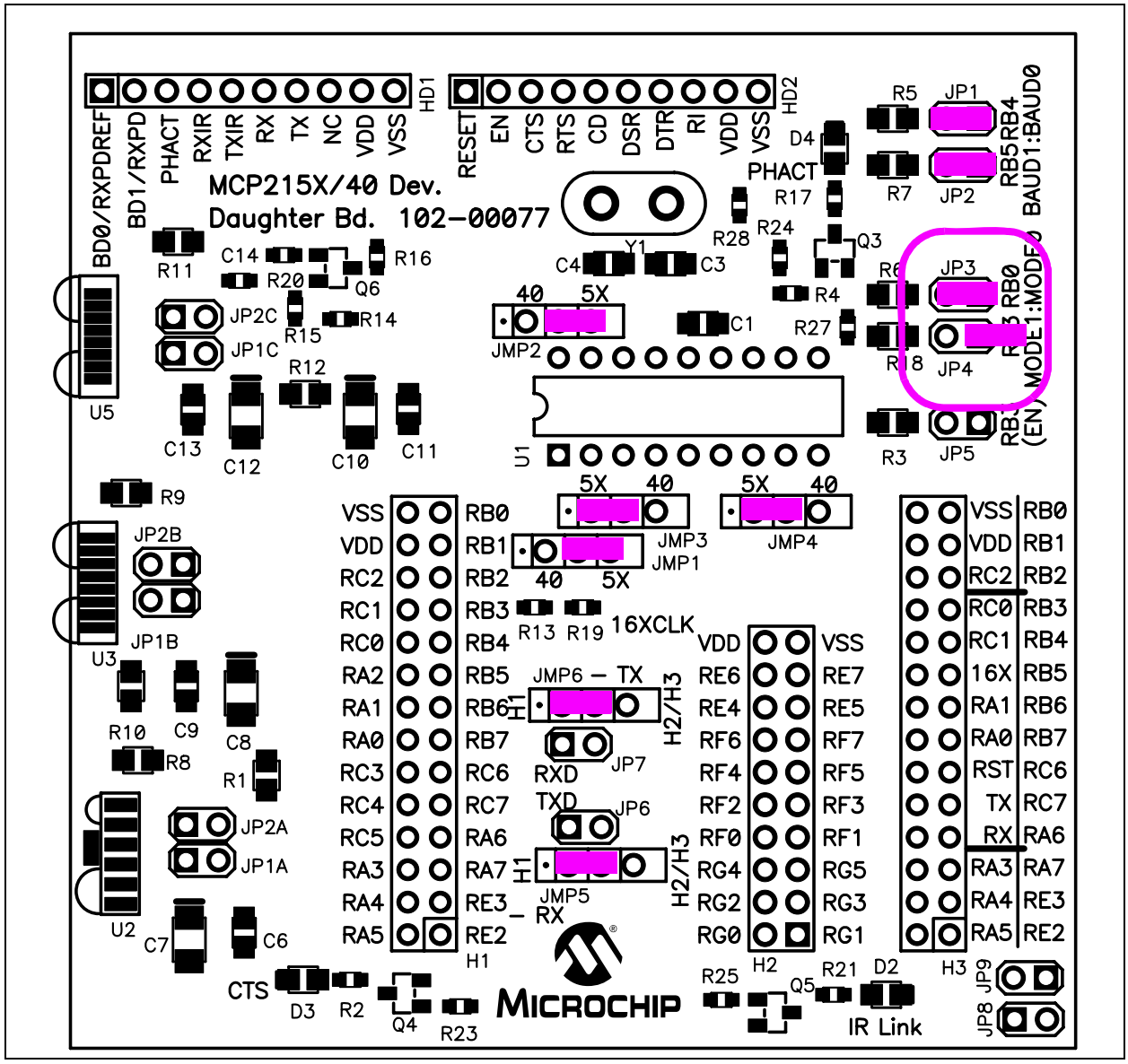

TABLE D-3: DEMO #2 STEPS

Step	Action	Result
1	Place both devices on a flat surface about 25 cm (10") apart, and with the IR ports facing each other.	—
2	***On the System #1 Unit (IR Dongle):*** Connect Serial to IR dongle to PC. Ensure that the device supports the IrCOMM 9-wire "cooked" service class.	**—**
3	***On the PICDEM™ HPC Explorer Demo Board plus MCP215X/40 Developer's Daughter Board:*** Insert the MCP215X/40 Developer's Daughter Board into the PICDEM™ HPC Explorer Demo Board. Ensure that the jumpers are configured as in Figure D-5.	**—**
4	***On the PICDEM HPC Explorer Demo Board plus MCP215X/40 Developer's Daughter Board:*** Apply power to the unit via the 9V power supply.	***On the PICDEM HPC Explorer Demo Board plus MCP215X/40 Developer's Daughter Board:*** The green power LED (D) will turn on.
5	***On the PICDEM HPC Explorer Demo Board plus MCP215X/40 Developer's Daughter Board:*** Depress and release the RESET Switch (S2 – $\overline{\text{MCLR}}$).	—
6	***On the PC:*** Wait for the PC system tray shows an IR icon. Placing the mouse over the icon will show the MCP2150 Device ID ("Generic IrDA®").	**—**
7	***On the PC:*** Open the HyperTerminal® program window for the Primary Device (such as COM 7). Ensure that the window indicates that the HyperTerminal program is connected.	***On the PICDEM HPC Explorer Demo Board plus MCP215X/40 Developer's Daughter Board:*** The "IR Link" LED will turn on and the "CTS" LED will strobe rapidly and then return to the normal rate. ***On the PC:*** The system tray icon will change from a single IR icon to two IR icons facing each other. An IR Link is now established.
8	***On the PC:*** In the HyperTerminal program window, type an "a".	***On the PC:*** The HyperTerminal window will display an "aA".
9	***On the PC:*** Type some additional alpha characters into the HyperTerminal program window.	***On the PC:*** The typed alpha character will echo where the case has changed; lowercase -> uppercase and uppercase -> lowercase. **Note:** The `00077 - HPC.asm` program only expects to receive 1 byte per IR packet.
10	Step 8 through Step 9 may be repeated.	—
11	***On the PC:*** "Disconnect" the HyperTerminal program window for the Primary Device (such as COM 7).	***On the PC:*** The IR Icon in the system tray will show that the link has been disconnected.

© 2006 Microchip Technology Inc.

D.1.2.3 DEMO #3 OPERATION - DIRECT TO UART (DB-9) MODE

In Demo #3, the MCP215X/40 Developer's Daughter Board will communicate directly to the PICDEM HPC Explorer Demo Board's DB-9 connector (and then to the PC). The PICDEM HPC Explorer Demo Board is used to determine the communication baud rate (9600) via the JP2 and JP1 jumper states. Given this state, the PICmicro MCU can then configure the MCP2150 UART baud rate. Power is supplied over the H1 and H2 interface headers. Jumpers JP3 and JP4 are used to select which demonstration program to run. Figure D-7 shows the jumper configuration for Demo #3. The jumpers that are circled are the jumpers that change position.

Table D-4 shows the steps for Demo #3 operation.

FIGURE D-6: DEMO #3 SYSTEM BLOCK DIAGRAM (1)

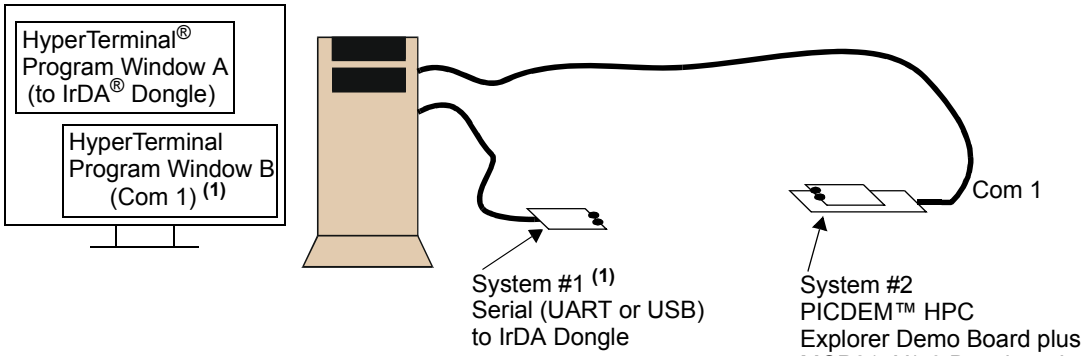

Note 1: The PC may be a notebook with an integrated IR port.

FIGURE D-7: DEMO #3 CONFIGURATION - DIRECT TO UART (DB-9) MODE

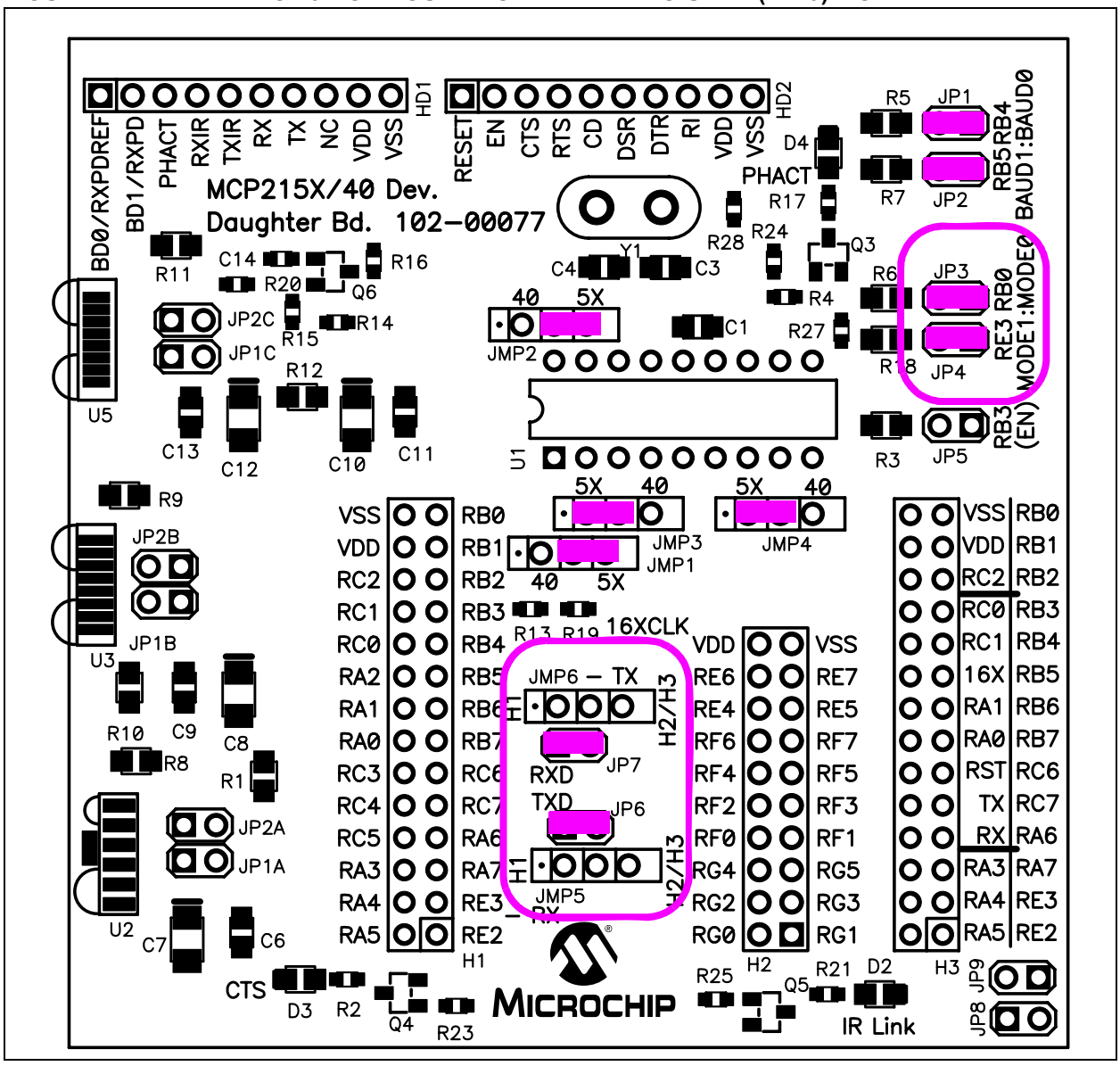

© 2006 Microchip Technology Inc.

TABLE D-4: DEMO #3 STEPS

Step	Action	Result
1	Place both devices on a flat surface about 25 cm (10") apart, and with the IR ports facing each other.	—
2	***On the System #1 Unit (IR Dongle):*** Connect Serial to IR dongle to PC. Ensure that device supports the IrCOMM 9-wire "cooked" service class.	**—**
3	***On the PICDEM™ HPC Explorer Demo Board plus MCP215X/40 Developer's Daughter Board:*** Insert the MCP215X/40 Developer's Daughter Board into the PICDEM HPC Explorer Demo Board. Ensure that the jumpers are configured as in Figure D-7.	**—**
4	***On the PICDEM HPC Explorer Demo Board plus MCP215X/40 Developer's Daughter Board:*** Apply power to the unit via the 9V power supply.	***On the PICDEM HPC Explorer Demo Board plus MCP215X/40 Developer's Daughter Board:*** The green power LED (D) will turn on.
5	***On the PICDEM HPC Explorer Demo Board plus MCP215X/40 Developer's Daughter Board:*** Ensure that the PC serial port (COM1/2) cable is connected to the PICDEM HPC Explorer Demo Board DB-9 connector.	**—**
6	***On the PICDEM HPC Explorer Demo Board plus MCP215X/40 Developer's Daughter Board:*** Depress and release the RESET Switch (S2 – $\overline{\text{MCLR}}$).	—
7	***On the PC:*** "Connect" the HyperTerminal® program window for the Primary Device (such as COM 7). Ensure that the window indicates that the HyperTerminal program is connected.	***On the PICDEM HPC Explorer Demo Board plus MCP215X/40 Developer's Daughter Board:*** The "IR Link" LED will turn on and the "CTS" LED will strobe rapidly and then return to the normal rate.
8	***On the PC:*** Open the HyperTerminal program window for the Secondary Device (embedded system) which would be connected to one on the standard COM ports (such as COM1).	—
9	***On the PC:*** In the Secondary Device HyperTerminal program window (COM1), type alpha-numeric characters (such as "123456 asdfg").	***On the PC:*** In the Primary Device HyperTerminal program window (COM7), the same characters should be displayed ("123456 asdfg").
10	***On the PC:*** In the Primary Device HyperTerminal program window (COM7), depress the **Return** key and type alpha-numeric characters (such as "7890 hjkl;").	***On the PC:*** In the Secondary Device HyperTerminal program window (COM1), the same characters should be displayed ("7890 hjkl;") on the line below the "123456 asdfg" characters.
11	Step 9 through Step 10 may be repeated.	—
12	***On the PC:*** "Disconnect" the HyperTerminal program window for the Secondary Device (embedded system) which would be connected to one on the standard COM ports (such as COM1).	—
13	***On the PC:*** "Disconnect" the HyperTerminal program window for the Primary Device (such as COM 7).	***On the PC:*** The IR icon in the system tray will show that the link has been disconnected.

D.1.3 Palm PDA Demo using the AN888 Application Program

Application Note 888 supports doing Demo #3, the Data Logger (250 Byte) demo. For this, the embedded system must be configured as in Figure D-7.

D.1.3.1 THE PALM PDA GUI

The GUI consists of a number of user-interface elements, including command buttons, text labels and a text-entry field. Refer to Figure D-8.

FIGURE D-8: PALM PDA MAIN FORM

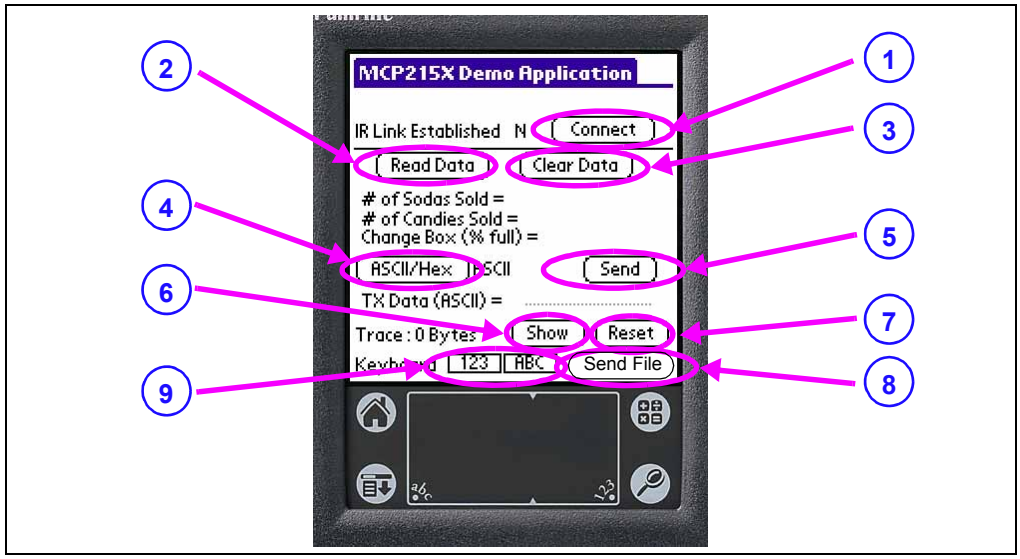

1. The **Connect** button attempts to establish a connection to the MCP215X/40 Developer's Daughter Board with the Palm PDA acting as the Primary device. The label to the left of the button provides an indication of the connection.
2. The **Read Data** button sends a query to the demo board requesting the soda and candy counter values. Received data is parsed and displayed.
3. The **Clear Data** button sends a command to the demo board instructing it to reset the application level counters. The command to "Read Data" is then sent to ensure that the registers were cleared.
4. The **ASCII/HEX** button toggles the application between ASCII and HEX modes. This value is used when preparing and transmitting data to the IR demo board. This is useful when there is a need to send a non-printable value, such as low-order ASCII. For example, to send the value 0x03, use the keyboard or Graffiti® to enter "`03`" (without the quotes). This will be converted to 0x03 and transmitted.
5. The **Send** button sends the data shown on the "TX Data" line. If HEX mode is selected, minimal error-checking is performed.
6. The **Show** button causes a message box to be displayed that contains the received buffer information.
7. The **Reset** button clears the Palm PDA application's receive data buffer.
8. The **Send File** button is used to send a file.
9. The **123** and **ABC** button opens a keyboard for data entry. The **123** button will open the numeric keyboard, while the **ABC** button will open the alpha keyboard.

© 2006 Microchip Technology Inc.

D.1.3.2 RUNNING THE DEMO USING THE APPLICATION NOTE AN888 PROGRAM

After installing the AN888 application program to your Palm PDA, the program needs to be launched. This PDA program communicates with the MCP215X/40 Developer's Daughter Board.

Table D-5 shows the steps to demonstrate the 250-byte S -> P Data Transfer program.

TABLE D-5: 250-BYTE S -> P DATA TRANSFER DEMO - PALM® PDA

Step	Action	Result
1	Place both devices on a flat surface about 25 cm (10") apart, with the IR ports facing each other.	—
2	***On the PICDEM™ HPC Explorer Demo Board plus MCP215X/40 Developer's Daughter Board:*** Ensure that jumpers are configured as in Figure D-7.	—
3	***On the PICDEM HPC Explorer Demo Board plus MCP215X/40 Developer's Daughter Board:*** Plug a 9V AC-to-DC power supply (such as those supplied with some Microchip development tools) into the 9V DC connection plug (J1).	***On the MCP215X/40 Developer's Daughter Board:*** The green power LED (D9) will turn on.
4	***On the PICDEM HPC Explorer Demo Board plus MCP215X/40 Developer's Daughter Board:*** Depress the RESET switch.	
5	***On the PDA:*** Tap on the **MCP215XDemo** icon.	***On the PDA:*** The screen will display the **MCP215XDemo** program window.
6	***On the PDA:*** Tap on the **Connect** button.	***On the PDA:*** The **Connect** button will change to the **Disconnect** button.
7	***On the PDA:*** Tap on the **123** button.	***On the PDA:*** This opens the numeric keyboard.
8	***On the PDA:*** Tap on the number (**5**) button.	***On the PDA:*** In the upper-left corner of the window, the typed number will appear.
9	***On the PDA:*** Tap on the **Done** button.	***On the PDA:*** This closes the numeric keyboard window. The number that was typed is shown on the "TX Data (ASCII) =" line.
10	***On the PDA:*** Tap on the **Send Byte** button.	***On the PICDEM HPC Explorer Demo Board plus MCP215X/40 Developer's Daughter Board:*** The "IR Link" LED will turn on (the IR link is now open) and the "CTS" LED will strobe rapidly before returning to the normal rate.
		On the PDA: Trace will show "250 bytes".
11	***On the PDA:*** Tap on the **Show** button.	***On the PDA:*** This opens the trace buffer window. The received data table should be in the window.
12	***On the PDA:*** Tap on the **OK** button.	***On the PDA:*** This closes the trace buffer window.
13	***On the PDA:*** Tap on the **Reset** button.	***On the PDA:*** This will open a query window that asks "Reset Trace Buffer, Are You Sure".

TABLE D-5: 250-BYTE S -> P DATA TRANSFER DEMO - PALM® PDA (CONTINUED)

Step	Action	Result
14	***On the PDA:*** In the Query window, tap on the **Yes** button.	***On the PDA:*** This clears the contents of the trace buffer. Trace shows "0 Bytes".
15	Step 7 through Step 14 may be repeated.	—
16	***On the PDA:*** Tap on the **Disconnect** button.	***On the PDA:*** This will disconnect (close) the IR link. When the IR link is disconnected, the PC icon will change to indicate that the IR link is disconnected (has a red X).
		On the PICDEM HPC Explorer Demo Board plus MCP215X/40 Developer's Daughter Board: The "IR Link" and the "CTS" LEDs will turn off.

© 2006 Microchip Technology Inc.

D.1.4 Pocket PC PDA Demo using the AN926 Application Program

Application Note 926 supports doing Demo #3, the Data Logger (250 Byte) demo. For this, the embedded system must be configured as in Figure D-7.

D.1.4.1 THE POCKET PC PDA GUI

The GUI consists of a number of user interface elements including command buttons, text labels and a text-entry field. (Figure D-9)

FIGURE D-9: POCKET PC PDA WINDOW

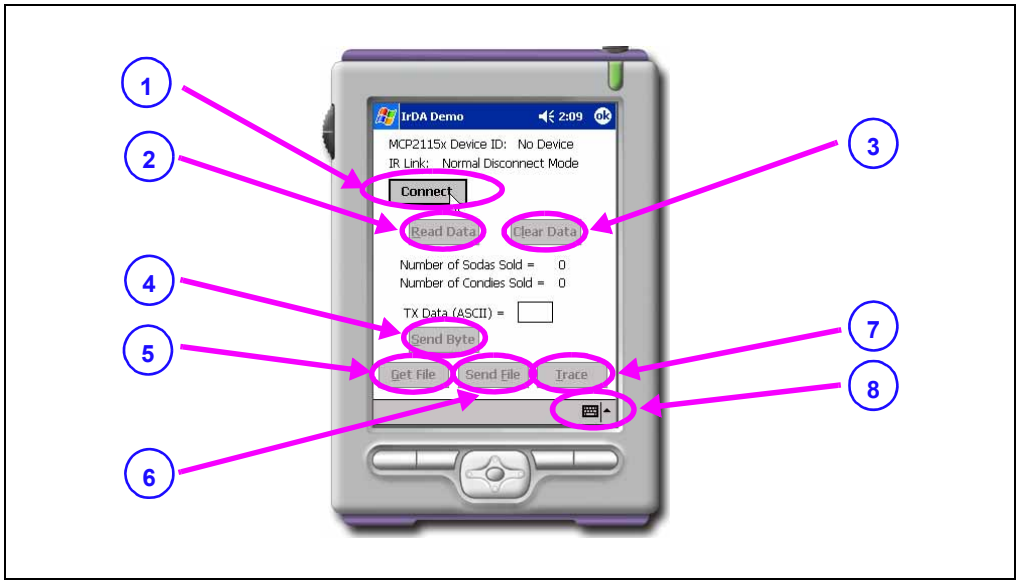

1. The **Connect** button attempts to establish a connection to the IR demo board. The PPC device is acting as the Primary device and the demo board as the Secondary device.
2. The **Read Data** button causes a query to be sent to the demo board, requesting the number of sodas and candies information. Data received from the demo board is parsed and displayed in text labels.
3. The **Clear Data** button sends a command to the demo board instructing it to reset the application level counters.
4. The **Send Byte** button transfers the byte entered into the TX Data (ASCII) text box. Any byte may be entered and transferred to the embedded system. If the byte corresponds to one of the commands to read data, clear data or transfer a buffer, the board will respond depending on its mode (vending machine or 250-byte transfer).
5. The **Get File** button initiates the 250-byte data transfer from the embedded system by sending the embedded system the command byte for the transfer.
6. The **Send File** button allows the user to select a file on the PPC and transfer it to the embedded system.
7. The **Trace** button causes the information in the trace buffer to be displayed. Within this window is the capability to clear the trace buffer.
8. The **Keyboard** button opens a keyboard for data entry. The **123** button will open the numeric keyboard, while the **ABC** button will open the alpha keyboard.

D.1.4.2 RUNNING THE DEMO USING THE APPLICATION NOTE 926 PROGRAM

After installing the AN926 application program to your Pocket PC PDA, the program needs to be launched. This PDA program communicates with the MCP215X/40 Developer's Daughter Board.

Table D-6 shows the steps to demonstrate the 250-byte S -> P Data Transfer program.

TABLE D-6: 250-BYTE S -> P DATA TRANSFER DEMO - POCKET PC

Step	Action	Result
1	Place both devices on a flat surface about 25 cm (10") apart and with the IR ports facing each other.	—
2	***On the PICDEM™ HPC Explorer Demo Board plus MCP215X/40 Developer's Daughter Board:*** Ensure that jumpers are configured as in Figure D-7.	—
3	***On the PICDEM HPC Explorer Demo Board plus MCP215X/40 Developer's Daughter Board:*** Plug a 9V AC-to-DC power supply (such as supplied with some Microchip development tools) into the 9V DC connection plug (J1).	***On the PICDEM HPC Explorer Demo Board plus MCP215X/40 Developer's Daughter Board:*** The green power LED (D9) will turn on
4	***On the PICDEM HPC Explorer Demo Board plus MCP215X/40 Developer's Daughter Board:*** Depress the RESET switch.	
5	***On the PDA:*** Start the **IrDA® Demo** program.	***On the PDA:*** The screen will display the "IrDA Demo" program window, with the "Device ID" line displaying "Generic IrDA" and the "IR Link" line displaying "Discovery Mode".
6	***On the PDA:*** Tap on the **Connect** button.	***On the PDA:*** Once the connection is made, the program will be updated so that the **Connect** button is called the **Disconnect** button and the "IR Link" line displays "Normal Response Mode".
		On the PICDEM HPC Explorer Demo Board plus MCP215X/40 Developer's Daughter Board: The "IR Link" LED will turn on and the "CTS" LED will strobe rapidly and then return to the normal rate. This indicates that an IR link is established between the PDA and the demo board.
7	***On the PDA:*** Tap on the **Get File** button.	***On the PICDEM HPC Explorer Demo Board plus MCP215X/40 Developer's Daughter Board:*** The "CTS" LED will strobe rapidly and then return to the normal rate.
		On the PDA: The data is received in the program's trace buffer.
8	***On the PDA:*** Tap on the **Trace** button.	***On the PDA:*** This opens the trace buffer window. You may scroll up and down in this window to view the received data.
9	***On the PDA:*** Tap on the **Clear** button.	***On the PDA:*** This clears the data that is in the trace buffer window.
10	***On the PDA:*** Tap on the **Close** button.	***On the PDA:*** This closes the trace buffer window.
11	Step 7 through Step 10 may be repeated.	—

© 2006 Microchip Technology Inc.

TABLE D-6: 250-BYTE S -> P DATA TRANSFER DEMO - POCKET PC (CONTINUED)

Step	Action	Result
12	***On the PDA:*** Tap on the **Disconnect** button.	***On the PDA:*** This will disconnect (close) the IR link. When the IR Link is closed, the program window will be updated so that the **Disconnect** button changes back to the **Connect** button. The "IR Link" line will display "Normal Disconnect Mode" and then, after a couple of seconds, will display "Discovery Mode".
		On the PICDEM HPC Explorer Demo Board plus MCP215X/40 Developer's Daughter Board: The "IR Link" and the "CTS" LEDs will turn off.

D.1.5 Window XP PC with an IrDA Standard Port Demo using the AN941 Application Program

Application Note 941 supports doing Demo #3, the Data Logger (250 Byte) demo. For this, the embedded system must be configured as in Figure D-7.

D.1.5.1 THE WINDOWS XP PC GUI

The GUI consists of a number of user interface elements including command buttons, text labels and a text-entry field. Figure D-10 identifies the buttons, while the text below describes the operation of the button.

FIGURE D-10: WINDOWS XP PC WINDOW

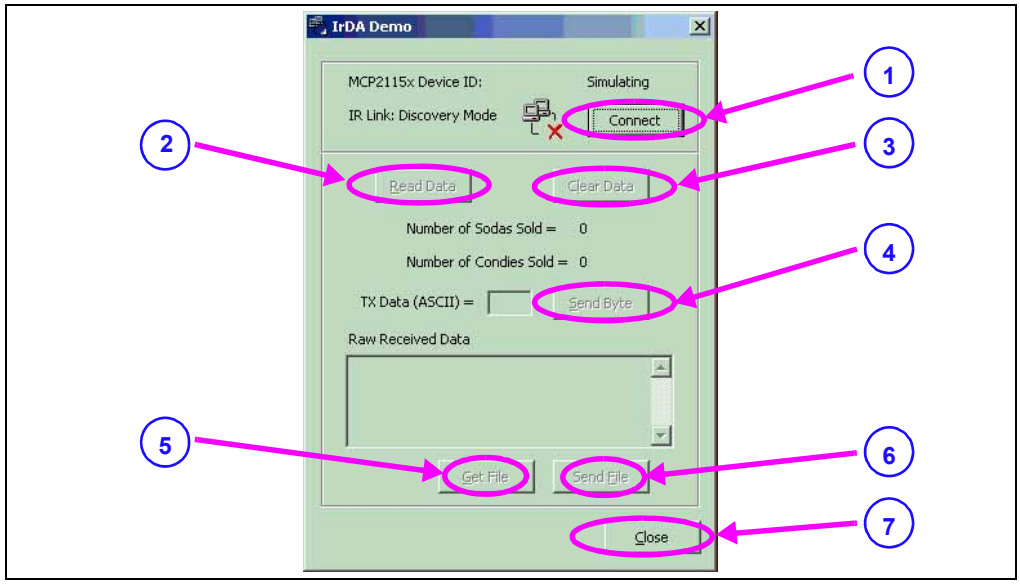

1. The **Connect** button attempts to establish a connection to the IR demo board. The PC is acting as the Primary device and the demo board acts as the Secondary device.
2. The **Read Data** button causes a query to be sent to the demo board requesting a tally of the number of sodas and candies dispensed. Data received from the demo board is parsed and displayed in text labels.
3. The **Clear Data** button sends a command to the demo board instructing it to reset the application level counters.
4. The **Send Byte** button transfers the byte entered into the TX Data (ASCII) text box. Any byte may be entered and transferred to the embedded system. If the byte corresponds to one of the commands to read data, clear data or transfer a buffer, the board will respond depending on its mode (vending machine or 250-byte transfer).
5. The **Get File** button initiates the 240-byte data transfer from the embedded system by sending the embedded system the command byte for the transfer.
6. The **Send File** button allows the user to select a file on the PC and transfer it to the embedded system.
7. The **Close** button closes the application.

© 2006 Microchip Technology Inc.

D.1.5.2 RUNNING THE DEMOS USING THE APPLICATION NOTE 941 PROGRAM

After saving the AN941 application program to your PC's hard drive, the program needs to be launched. This PC program communicates with the MCP215X/40 Developer's Daughter Board.

Table D-7 shows the steps to demonstrate the 250-byte S -> P Data Transfer program.

TABLE D-7: 250 BYTE S -> P DATA TRANSFER DEMO - WINDOWS® XP

Step	Action	Result
1	Place both devices on a flat surface about 25 cm (10") apart, with the IR ports facing each other.	—
2	***On the PICDEM™ HPC Explorer Demo Board plus MCP215X/40 Developer's Daughter Board:*** Ensure that jumpers are configured as in Figure D-7.	—
3	***On the PC:*** Run the `IrDA Demo.exe` program.	***On the PC:*** The program is searching for an IrDA® standard device.
4	***On the PICDEM HPC Explorer Demo Board plus MCP215X/40 Developer's Daughter Board:*** Plug a 9V AC-to-DC power supply (such as those supplied with some Microchip development tools) into the 9V DC connection plug (J1).	***On the PICDEM HPC Explorer Demo Board plus MCP215X/40 Developer's Daughter Board:*** The green power LED (D9) will turn on
		In the IrDA Demo PC program window: The program should indicate that it has "found" an IrDA standard device, called "Generic IrDA".
5	***On the PICDEM HPC Explorer Demo Board plus MCP215X/40 Developer's Daughter Board:*** Depress the RESET switch.	
6	***On the PC:*** If the PC is configured to show the IR icon in the system tray, a single IR LED will be displayed. Place the mouse cursor over this icon.	***On the PC:*** The message "Generic IrDA is in range" will be displayed, "Generic IrDA" is the device ID of the MCP2150.
7	***In the IrDA standard demo PC program window:*** Depress and release the **Connect** button.	***In the IrDA standard demo PC program window:*** Once the connection is made, the program window will be updated to show that the **Connect** button now is called the **Disconnect** button.
		On the PICDEM HPC Explorer Demo Board plus MCP215X/40 Developer's Daughter Board: The "IR Link" LED will turn on and the "CTS" LED will flash. This indicates that an IR link is established between the PC and the demo board.
8	***On the PC:*** If the PC is configured to show the IR icon in the system tray, the single IR LED icon will change to an icon of two IR LEDs facing each other and talking. Place the mouse cursor over this icon.	***On the PC:*** The message "Wireless link with Generic IrDA at 115200 bps" will be displayed. This shows that a link is now established for data communication and that the IR communication rate is 115200 bps, the baud rate that was negotiated between the PC IrDA standard hardware and the MCP2150.
9	***In the IrDA standard demo PC program window:*** In the **TX Data (ASCII)** entry box, type in any number (such as "5").	—

TABLE D-7: 250 BYTE S -> P DATA TRANSFER DEMO - WINDOWS® XP (CONTINUED)

Step	Action	Result
10	***In the IrDA standard demo PC program window:*** Depress and release the **Send Byte** button.	***On the PICDEM HPC Explorer Demo Board plus MCP215X/40 Developer's Daughter Board:*** The "CTS" LED will strobe rapidly and then return to the normal rate.
		In the IrDA standard demo PC program window: The "Raw Received Data" window will display the data table that was transmitted by the MCP215X/40 Developer's Daughter Board. This table is shown in **Appendix H. "MCP215X/40 250-Byte Data Transmit Table"**. The scroll bar may be used to inspect the data received.
11	Step 9 through Step 10 may be repeated.	—
12	***In the IrDA standard demo PC program window:*** Depress and release the **Disconnect** button.	***In the IrDA standard demo PC program window:*** This will disconnect (close) the IR link. When the IR link is disconnected, the PC icon will change to indicate that the IR link is disconnected (has a red X).
		On the PICDEM HPC Explorer Demo Board plus MCP215X/40 Developer's Daughter Board: The "IR Link" and the "CTS" LEDs will turn off.
13	***On the PC:*** If the PC is configured to show the IR icon in the system tray, a single IR LED will be displayed.	—

© 2006 Microchip Technology Inc.

Appendix E. Using the MCP215X/40 Developer's Daughter Board with the PICDEM™ FS USB Demo Board

E.1 DEMONSTRATION WITH THE PICDEM FS USB DEMO BOARD

Note: If the MCP215X/40 Developer's Daughter Board PCB is Rev 2, refer to **E.2 "MCP215X/40 Developer's Daughter Board PCB Rev 2 Errata"**. This also shows how to determine board revision.

To perform a demonstration of the MCP215X/40 Developer's Daughter Board, two systems are needed. A Primary Device and a Secondary Device (the embedded system).

The embedded system (Secondary Device) is a MCP215X/40 Developer's Daughter Board (MCP212XEV-DB) plus the PICDEM™ FS USB Demo Board (DM183022).

The Primary Device is either a PC with IR Port (or IR Dongle) or a PDA.

There are four presentations of running the demos. These are:

1. **Appendix D.1.2 "PC Demos using HyperTerminal"**.
2. **Appendix D.1.3 "Palm PDA Demo using the AN888 Application Program"**.
3. **Appendix D.1.4 "Pocket PC PDA Demo using the AN926 Application Program"**.
4. **Appendix D.1.5 "Window XP PC with an IrDA Standard Port Demo using the AN941 Application Program"**.

The PC Demos using HyperTerminal shows all three PICDEM FS USB Demo Board program modes, while those using the Application Note programs only show the Data Logger (250 Byte) program mode. The steps to configure HyperTerminal is shown in **Appendix F. "Configuring the HyperTerminal® Program"**.

Figure E-1 shows a block diagram of a PC based demonstration system.

FIGURE E-1: SYSTEM BLOCK DIAGRAM

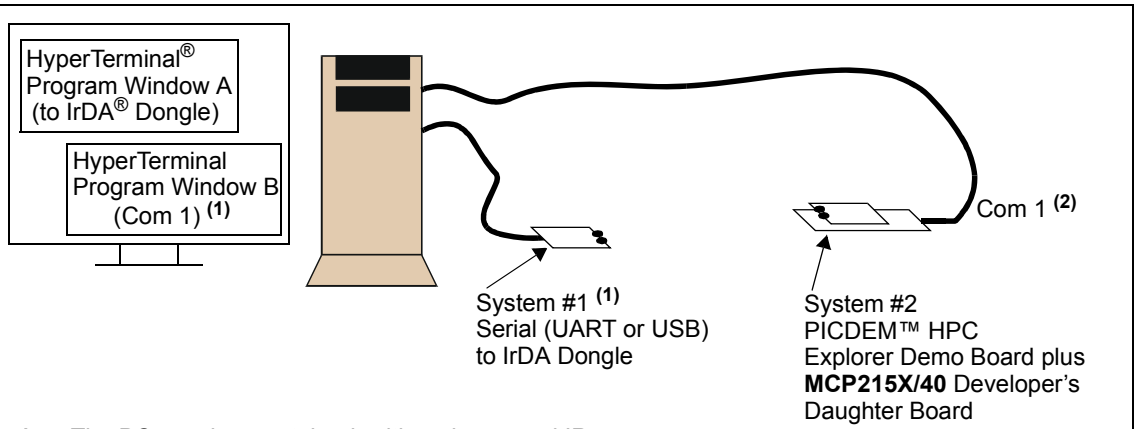

Note 1: The PC may be a notebook with an integrated IR port.

2: Only required if data is communicated with the PC. Some program modes "respond" to received data (data not sent to PC).

The firmware for these demos is available on the Microchip web site, as well as on the AIPD Evaluation Board CD-ROM. The file name is `00077 - FS USB.asm`. This code must be programmed into the PICDEM FS USB Demo Board's PIC18F4550 for demo operation. This code requires the JP3 and JP4 jumpers to be in the documented state to select program mode operation.

Note: Other PICDEM Demo Boards may be used, but appropriate firmware needs to be installed to demonstrate the system.

The crystal frequency of the PICDEM Demo Board determines the error rates for the EUSART baud rates, as well as the 16XCLK generation (for the MCP2150). So, for the PICDEM FS USB Demo Board, the default crystal is 20 MHz. The 16XCLK frequency for 115200 and 57600 baud has an error outside usable limits for IrDA standard communication for 20 MHz operation (see Table E-1). Table E-1 shows the SPBRG values for the EUSART at the same crystal frequencies.

TABLE E-1: SPBRG VALUES FOR EUSART(1)

Desired Baud Rate	@ 40 MHz(2)		@ 20 MHz(2)		@ 14.7592 MHz(2)		@ 10 MHz(2)		@ 7.3728 MHz(2)	
	SPBRG(3)	%Error	SPBRG(3)	%Error	SPBRG(3)	%Error	SPBRG(3)	%Error	SPBRG(3)	%Error
9600	225	-1.73%	129	-0.16%	95	0%	64	-0.16%	47	0%
19200	129	-0.16%	64	-0.16%	47	0%	32	1.36%	23	0%
57600	42	-0.94%	21	1.36%	15	0%	10	1.36%	7	0%
115200	21	1.36%	10	1.36%	7	0%	4	-8.51%	3	0%

Note 1: Shaded values indicate a % error that is larger than should be used.

2: The following shows the PICDEM™ Demo Board device frequencies:
PICDEM™ HPC Explorer Demo Board has a 10 MHz crystal installed (4xPLL -> 40 MHz).
PICDEM™ FS USB Demo Board has a 20 MHz crystal installed.
PICDEM™ 2 Plus Demo Board has a 4 MHz crystal installed.
PICDEM™ LCD has a socket for an external canned oscillator (also has an internal 8 MHz RC).

3: SYNC = 0, BRGH = 1, BRG16 = 0.

© 2006 Microchip Technology Inc.

E.1.1 Demo #1 Operation - 250 Byte Transfer Mode

In Demo #1, the System #2 unit will receive a character and then stream 250 bytes of data (25 lines of 8 alphanumeric characters plus the return and line feed characters, for a total of 10 characters per line).

The System #1 unit is connected to the PC, while the System #2 unit is not required to be connected, though it still needs to be powered. The PICDEM FS USB Demo Board is used to determine the communication baud rate (115,200) via the JP2 and JP1 jumper states. Given this state, the PICmicro MCU can then configure the MCP2150 UART baud rate. Power is supplied over the H3 interface headers. Jumpers JP3 and JP4 are used to select which demo program to run. Figure E-3 shows the jumper configuration for Demo #1.

Table E-1 shows the steps for Demo #1.

FIGURE E-2: DEMO #1 SYSTEM BLOCK DIAGRAM (1)

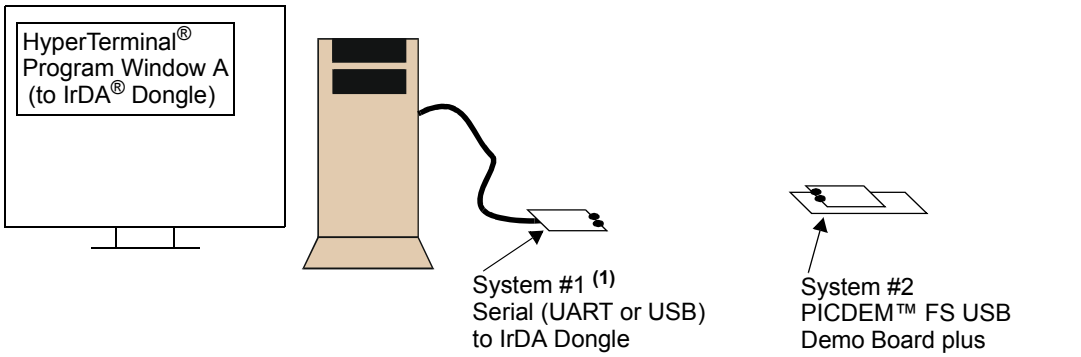

Note 1: The PC may be a notebook with an integrated IR port.

FIGURE E-3: DEMO #1 CONFIGURATION - 250 BYTE TRANSFER MODE

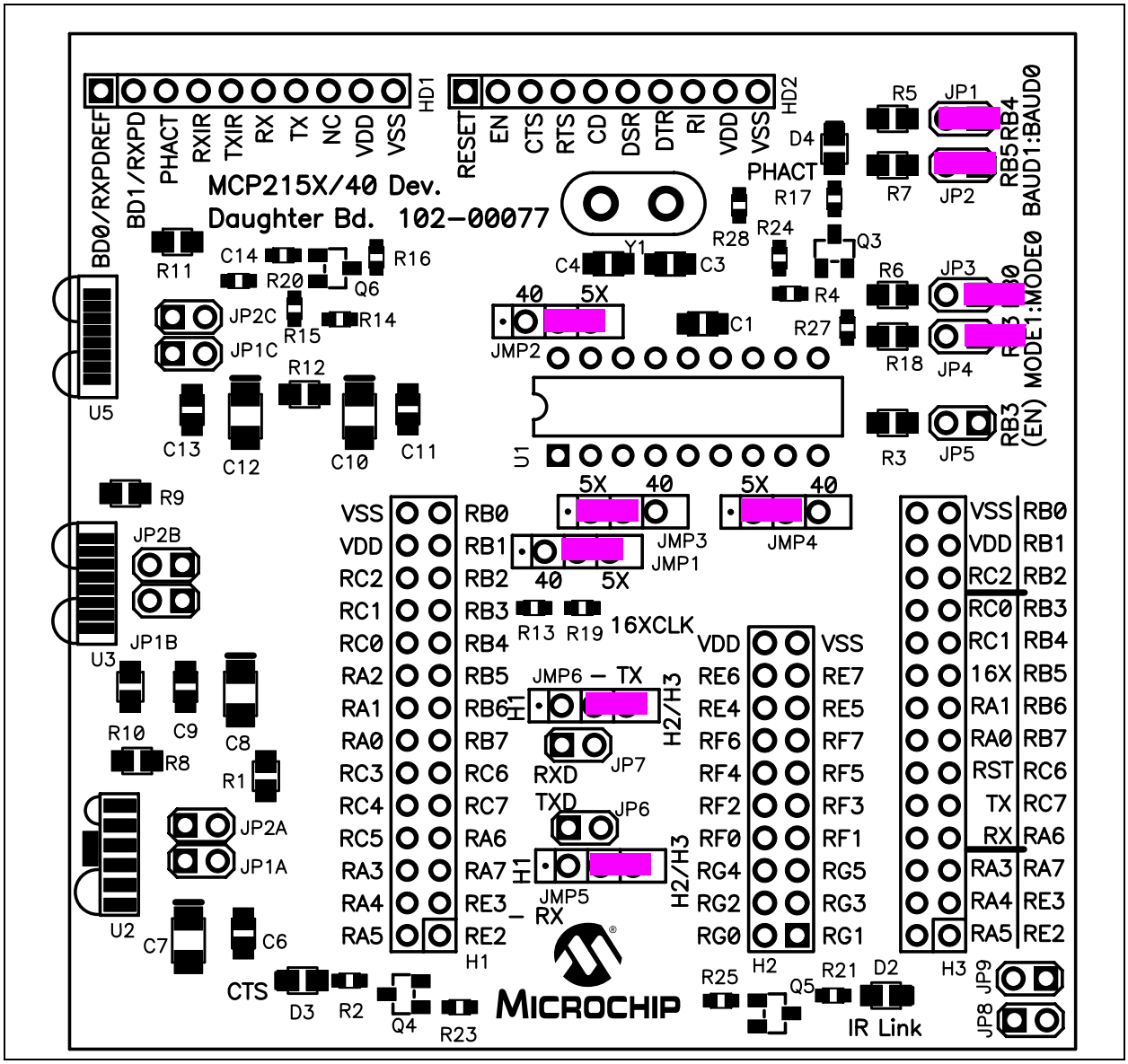

© 2006 Microchip Technology Inc.

TABLE E-2: DEMO #1 STEPS

Step	Action	Result
1	Place both devices on a flat surface about 25 cm (10") apart, and with the IR ports facing each other.	—
2	***On the System #1 Unit (IR Dongle):*** Connect Serial to IR dongle to PC. Ensure that device supports the IrCOMM 9-wire "cooked" service class.	**—**
3	***On the PICDEM FS USB Demo Board plus MCP215X/40 Developer's Daughter Board:*** Insert the MCP215X/40 Developer's Daughter Board into the PICDEM HPC Explorer Demo Board. Ensure that the jumpers are configured as in Figure E-2.	**—**
4	***On the PICDEM FS USB Demo Board plus MCP215X/40 Developer's Daughter Board:*** Apply power to the unit via the 9V power supply.	***On the PICDEM FS USB Demo Board plus MCP215X/40 Developer's Daughter Board:*** The green power LED (D) will turn on.
5	***On the PICDEM FS USB Demo Board plus MCP215X/40 Developer's Daughter Board:*** Depress and release the RESET Switch (S2 – $\overline{\text{MCLR}}$).	—
6	***On the PC:*** Wait for the PC to make a sound and the system tray shows an IR icon. Placing the mouse over the icon will show the MCP2150 Device ID ("Generic IrDA").	**—**
7	***On the PC:*** Open the HyperTerminal® program window for the Primary Device (such as COM 7). Ensure that the window indicates that the HyperTerminal program is connected.	***On the PICDEM FS USB Demo Board plus MCP215X/40 Developer's Daughter Board:*** The "IR Link" LED will turn on and the "CTS" LED will strobe rapidly and then return to the normal rate. ***On the PC:*** The system tray icon will change from a single IR icon to two IR icons facing each other. An IR Link is now established.
8	***On the PC:*** In the HyperTerminal program window, type a character.	***On the PC:*** The HyperTerminal window will display 25 rows with 8 alpha numeric characters.
9	***On the PC:*** After each 250 byte transfer completes, another character may be typed in the HyperTerminal program window.	***On the PC:*** The typed alpha character will cause a 250 byte packet to be transferred back to the PC. The HyperTerminal window will display 25 rows with 8 alpha numeric characters. **Note:** The `00077 - FS USB.asm` program only expects to receive 1 byte per IR packet.
10	Step 9 may be repeated.	—
11	***On the PC:*** "Disconnect" the HyperTerminal program window for the Primary Device (such as COM 7).	***On the PC:*** The IR icon in the system tray will show that the link has been disconnected.

E.1.2 Demo #2 Operation - Echo Mode

In Demo #2, the System #2 unit will echo any alpha character received, changing the case of the character (lowercase to uppercase/uppercase to lowercase).

The System #1 unit is connected to the PC, while the System #2 unit is not required to be connected, though it still needs to be powered. The PICDEM FS USB Demo Board is used to determine the communication baud rate (115,200) via the JP2 and JP1 jumper states. Given this state, the PICmicro MCU can then configure the MCP2150 UART baud rate. Power is supplied over the H1 and H2 interface headers. Jumpers JP3 and JP4 are used to select which demo program to run. Figure E-5 shows the jumper configuration for Demo #1.

Table E-3 shows the steps for Demo #2.

FIGURE E-4: DEMO #2 SYSTEM BLOCK DIAGRAM (1)

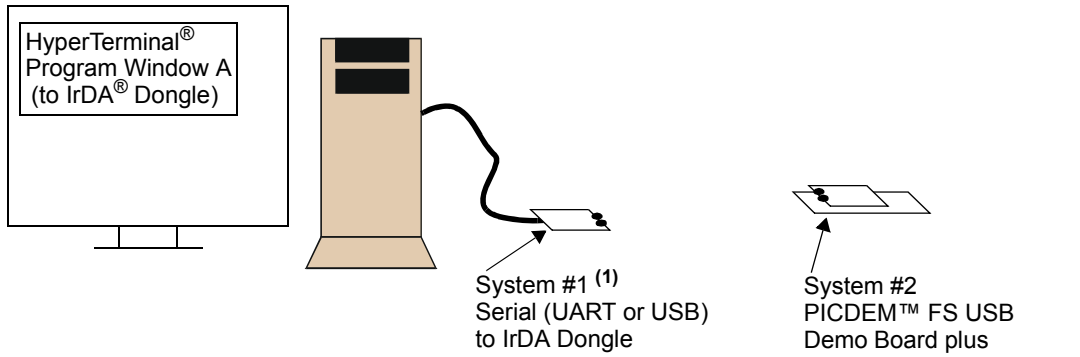

Note 1: The PC may be a notebook with an integrated IR port.

© 2006 Microchip Technology Inc.

FIGURE E-5: DEMO #2 CONFIGURATION - ECHO MODE

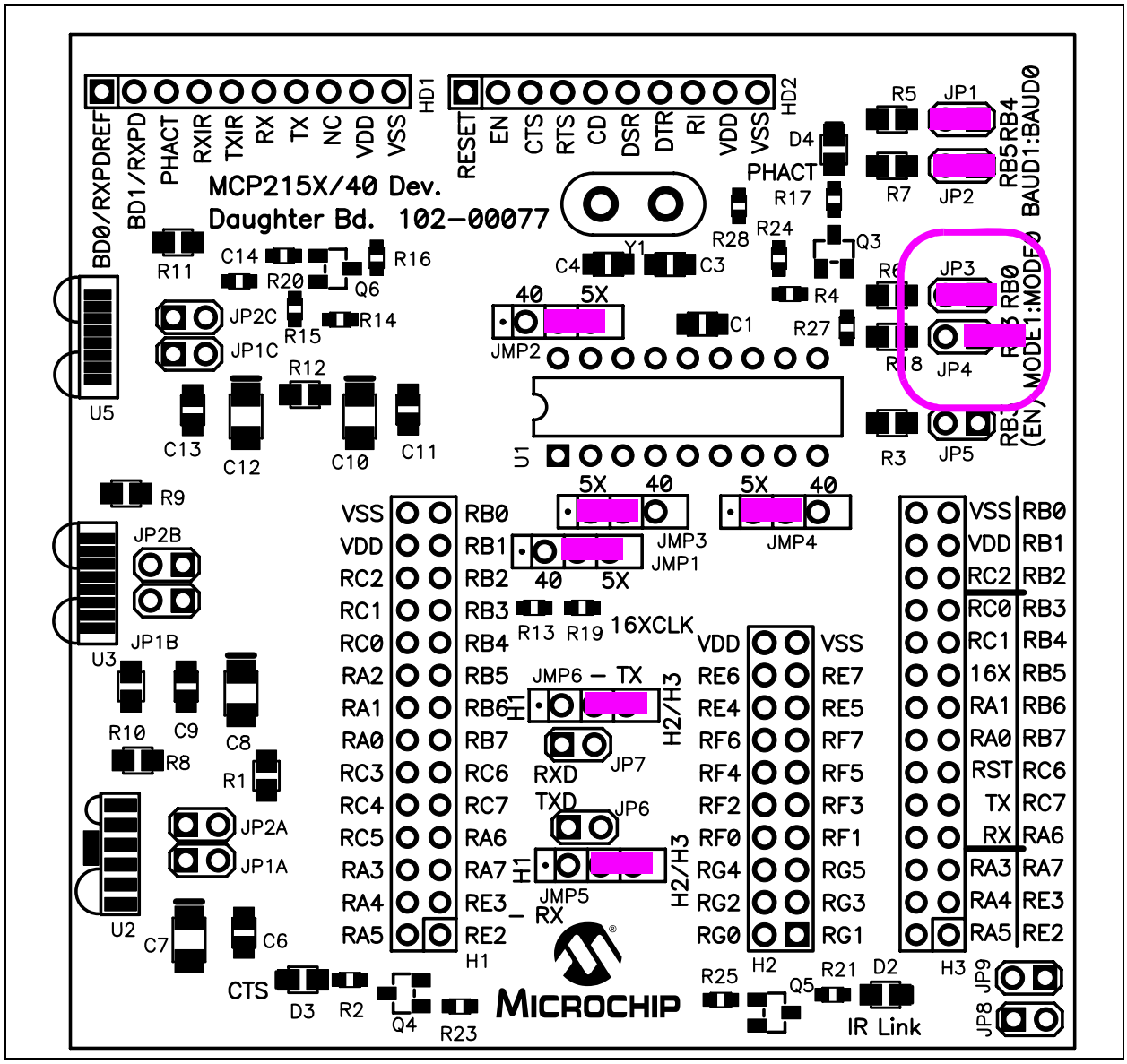

TABLE E-3: DEMO #2 STEPS

Step	Action	Result
1	Place both devices on a flat surface about 25 cm (10") apart, and with the IR ports facing each other.	—
2	***On the System #1 Unit (IR Dongle):*** Connect Serial to IR dongle to PC. Ensure that device supports the IrCOMM 9-wire "cooked" service class.	**—**
3	***On the PICDEM™ FS USB Demo Board plus MCP215X/40 Developer's Daughter Board:*** Insert the MCP215X/40 Developer's Daughter Board into the PICDEM HPC Explorer Demo Board. Ensure that the jumpers are configured as in Figure E-6.	**—**
4	***On the PICDEM FS USB Demo Board plus MCP215X/40 Developer's Daughter Board:*** Apply power to the unit via the 9V power supply.	***On the PICDEM FS USB Demo Board plus MCP215X/40 Developer's Daughter Board:*** The green power LED (D) will turn on.
5	***On the PICDEM FS USB Demo Board plus MCP215X/40 Developer's Daughter Board:*** Depress and release the RESET Switch (S2 – $\overline{\text{MCLR}}$).	—
6	***On the PC:*** Wait for the PC system tray shows an IR icon. Placing the mouse over the icon will show the MCP2150 Device ID ("Generic IrDA®").	**—**
7	***On the PC:*** Open the HyperTerminal® program window for the Primary Device (such as COM 7). Ensure that the window indicates that the HyperTerminal program is connected.	***On the PICDEM FS USB Demo Board plus MCP215X/40 Developer's Daughter Board:*** The "IR Link" LED will turn on and the "CTS" LED will strobe rapidly and then return to the normal rate.
		On the PC: The system tray icon will change from a single IR icon to two IR icons facing each other. An IR Link is now established.
8	***On the PC:*** In the HyperTerminal program window, type an "a".	***On the PC:*** The HyperTerminal window will display an "aA".
9	***On the PC:*** Type some additional alpha characters into the HyperTerminal program window.	***On the PC:*** The typed alpha character will echo where the case has changed; lowercase -> uppercase and uppercase -> lowercase. **Note:** The `00077 - HPC.asm` program only expects to receive 1 byte per IR packet.
10	Step 8 through Step 9 may be repeated.	—
11	***On the PC:*** "Disconnect" the HyperTerminal® program window for the Primary Device (such as COM 7).	***On the PC:*** The IR icon in the system tray will show that the link has been disconnected.

© 2006 Microchip Technology Inc.

E.2 MCP215X/40 DEVELOPER'S DAUGHTER BOARD PCB REV 2 ERRATA

Figure E-6 shows how to determine the revision of the MCP215X/40 Developer's Daughter Board PCB. This errata only applies to Revision 2 (R2) of the PCB.

FIGURE E-6: BOARD REVISION INDICATOR

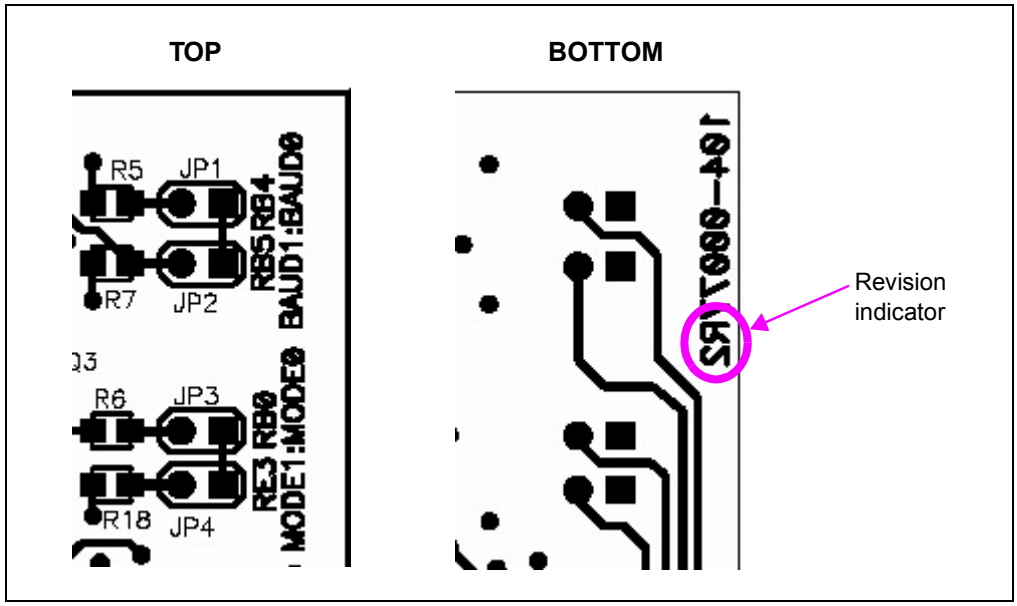

Programming the PICDEM FS USB board (such as with the MPLAB® ICD 2) occurs when the MCP215X/40 Developer's Daughter Board is plugged into the J6 header. There are two alternatives. These are:

1. When programming the PICDEM FS USB board, unplug the MCP215X/40 Developer's Daughter Board from the J6 header.
2. Cut a trace on the MCP215X/40 Developer's Daughter Board PCB.

Note: If the trace is cut, this signal must be reconnected if returning to the PICDEM HPC Demo Board and using the `00077 - HPC.asm` program. It may also be desirable for user specified programs.

FIGURE E-7: BOARD ECN FOR USE WITH THE PICDEM™ FS USB BOARD

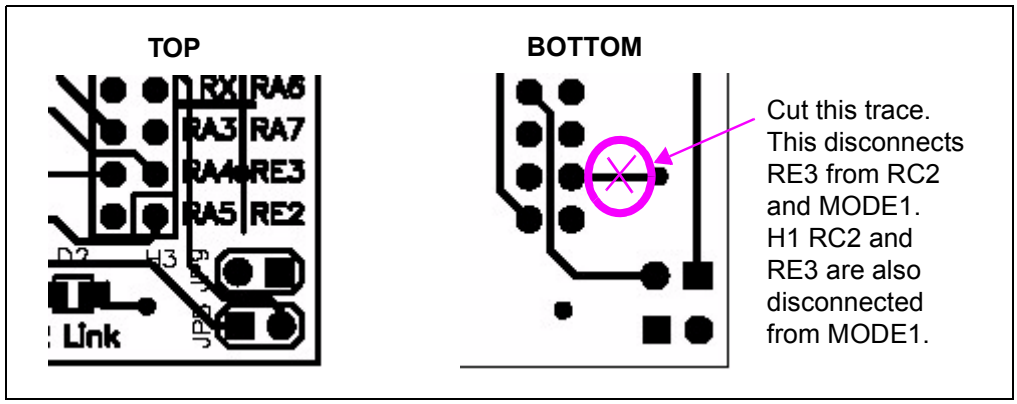

NOTES:

© 2006 Microchip Technology Inc.

Appendix F. Configuring the HyperTerminal® Program

F.1 CONFIGURING THE HyperTerminal PROGRAM

In running a demo, the HyperTermial program can be used on both the Primary Device and for the Secondary Device. The configuration of HyperTerminal is different depending if HyperTerminal is communicating as the Primary Device or as the Secondary Device.

To use a Laptop PC with an IrDA standard port as the Primary Device, the application program must connect to the IR port. Some standard Window programs may not be able to connect directly to the IR port (OS-specific).

For a Windows® XP (or Windows 2000) system, a 3rd-party driver needs to be installed to "create" the "virtual port" that HyperTerminal needs to connect to that allows it to use the IR port for communications. This driver is called IrCOMM2K and is available at www.IRCOMM2K.de. Please evaluate this product before installing it on your system to ensure that it will meet your requirements.

Microchip does not imply any suitability to your system requirements of any of these 3rd-party products. Please evaluate each product's specifications and requirements before installing them on your system.

Once the IrCOMM2K driver is installed, it creates a "new" com port (such as COM7). This is a virtual serial port that the PC Terminal Emulation application program (such as HyperTerminal) can be connected to.

To ensure that the PC is able to communicate to the PICDEM HPC Explorer Demo Board plus MCP215X/40 Developer's Daughter Board, the HyperTerminal program must be properly configured. This section describes how the HyperTerminal program should be configured. Refer to **Section F.1.1 "Configuring HyperTerminal"**.

F.1.1 Configuring HyperTerminal

1. Start the HyperTerminal Emulation program (usually located under the *Programs > Accessories > Communications* directory.

FIGURE F-1: CONNECTION DESCRIPTION WINDOW



2. In the **Connection Description** window, select the **Cancel** button. The window in Figure F-2 will be shown.

FIGURE F-2: HyperTerminal® PROGRAM MAIN WINDOW

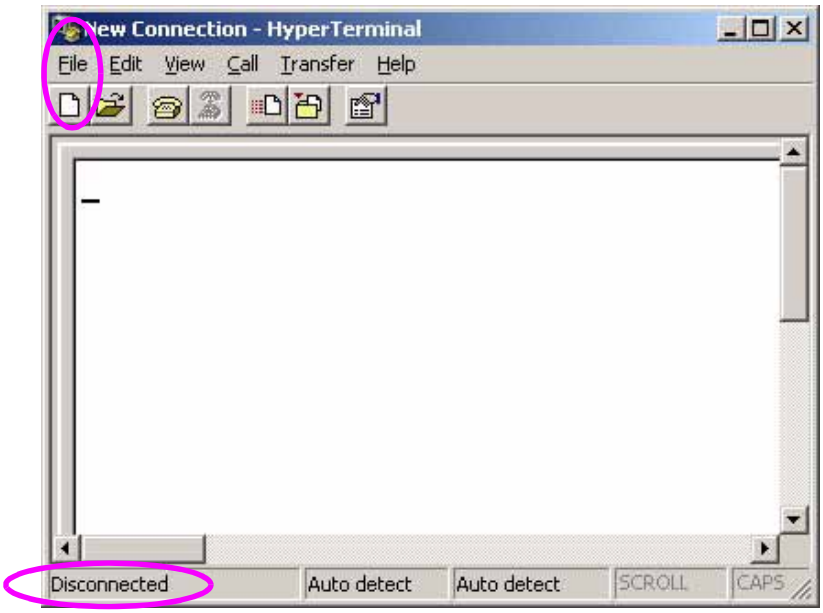

3. If the HyperTerminal program window does not indicate that the window is "Disconnected", select **Call -> Disconnect**. In the lower-left corner, the HyperTerminal program window will indicate "Disconnected".
4. In the programs menu, select *File > Properties*. The window in Figure F-3 is shown.

© 2006 Microchip Technology Inc.

FIGURE F-3: NEW CONNECTION PROPERTIES WINDOW

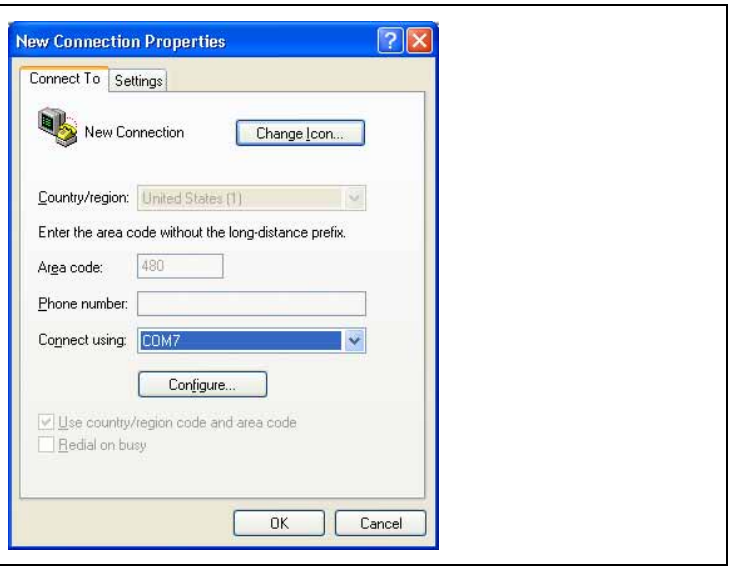

5. In the **New Connection Properties** window on the **Connect To** tab, go to the "*Connect Using"* pull-down and select the desired COM port. For the Primary Device, this will be the virtual serial port created by the IrCOMM2K driver installation (such as COM7). This will be one of the standard COM ports (such as COM1, COM2 or COM3) for the connection to the Embedded System.
6. Select the **Configure** button. This will open up the Port Settings window (Figure F-4).

FIGURE F-4: HyperTerminal® PROGRAM PROPERTIES CONFIGURATION WINDOW

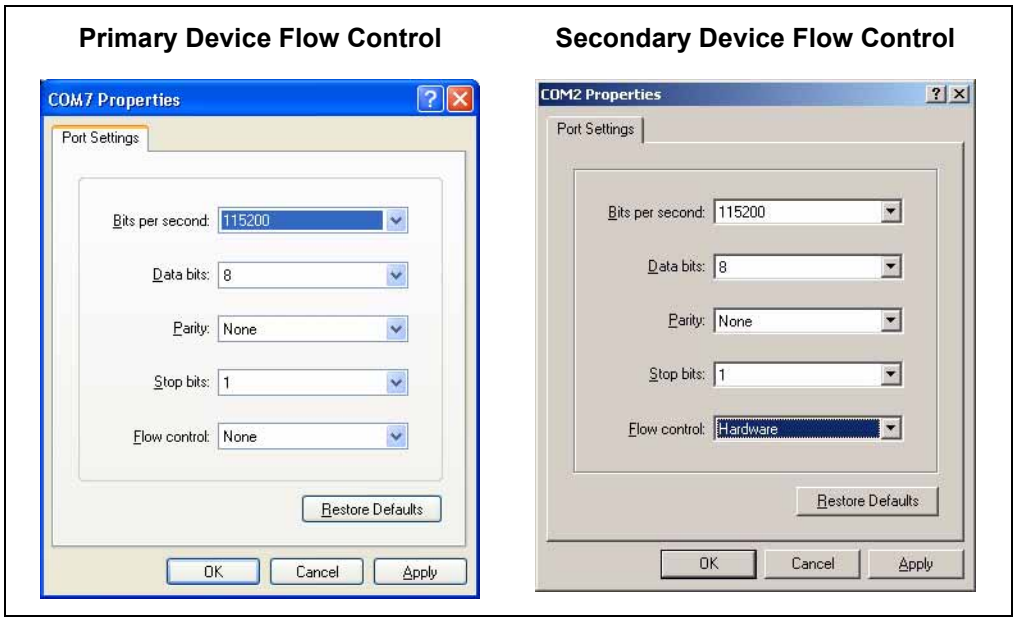

7. In the **COMx (COM7) Properties** window, configure the Port Setting for:
   - *"Bits per second:"* = 115200
   - *"Data Bits:"* = 8
   - *"Parity:"* = None
   - *"Stop Bit:"* = 1
   - *"Flow Control:"* = None (for Primary Device) or
     "Flow Control:" = Hardware (for Secondary Device)

   The port settings would then be configured as shown in Figure F-4.
8. Select the **OK** button. The Figure F-3 window will be shown.

© 2006 Microchip Technology Inc.

9. In the **New Connection Properties** window, select the **Settings** tab. The window will now look as shown in Figure F-5. Ensure that your settings match the settings shown.
10. Configure the New Connection Properties Settings.
    - Under the "*Function, arrow and control keys act as"* item, select the Terminal Keys radio button.
    - Under the "*Backspace key sends"* item, select the Ctrl+H radio button.
    - From the "*Emulation*" pull-down menu, select Auto-detect.
    - For *"Telnet Terminal ID"*, enter ANSI.
    - For "*Backscroll buffer lines"*, select 500 from the pull-down menu.
11. Select the **ASCII Setup** button. This will open the ASCII Setup window (Figure F-5).
12. In the "*ASCII Sending"* portion of the window:
    - Check "*Send line ends with line feeds".*
    - Check "*Echo typed characters locally".*
    - Set the "*Line delay*" and the "*Character delay"* to '0' milliseconds.
13. In the "*ASCII Receiving*" portion of the window:
    - Uncheck "*Append line feeds to incoming line ends"*.
    - Uncheck "*Force incoming data to 7-bit ASCII"*.
    - Check "*Wrap lines that exceed terminal width"*.
14. Ensure that your settings match the settings shown.
15. Select the **OK** button. This closes the **ASCII Setup** window and returns focus to the **New Connection Properties** window.

FIGURE F-5: NEW CONNECTION PROPERTIES - ASCII SETUP

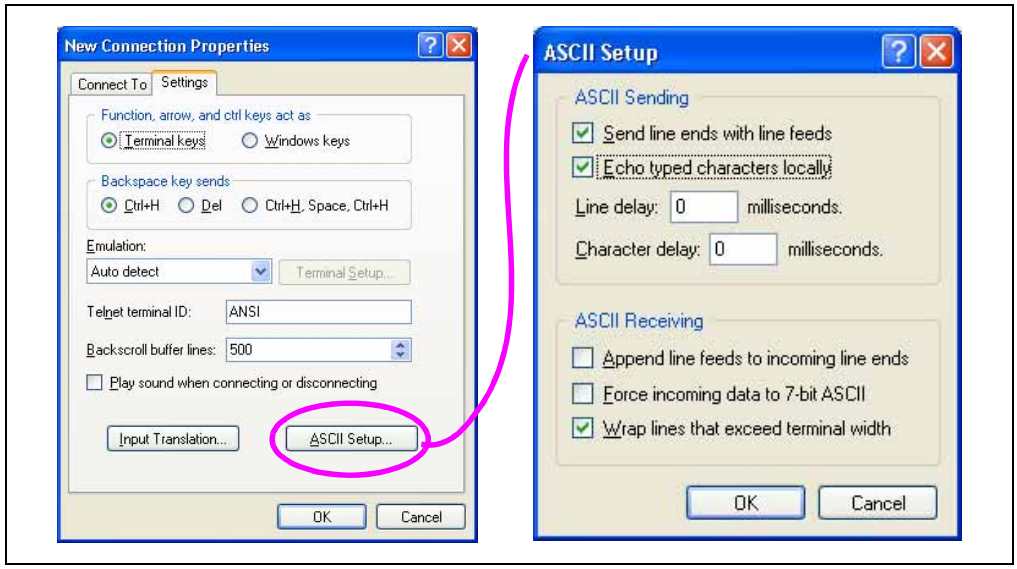

16. In the **New Connection Properties** window, select the **Input Translation** button. This will open the Host System Encoding Method window (Figure F-6).
    - In the "*Host System Encoding Method*" window, select Shift-JIS and click the **OK** button to close the window.
17. Then click the **OK** button in the **New Connection Properties** window.
18. Now that all the settings are configured, in HyperTerminal's pull-down menu, select *File > Save As*. Select the name that you wish. You may wish to save each configuration with a name that you can remember (one for the Primary Device and the other for the Secondary Device).

FIGURE F-6: NEW CONNECTION PROPERTIES - HOST SYSTEM ENCODING METHOD

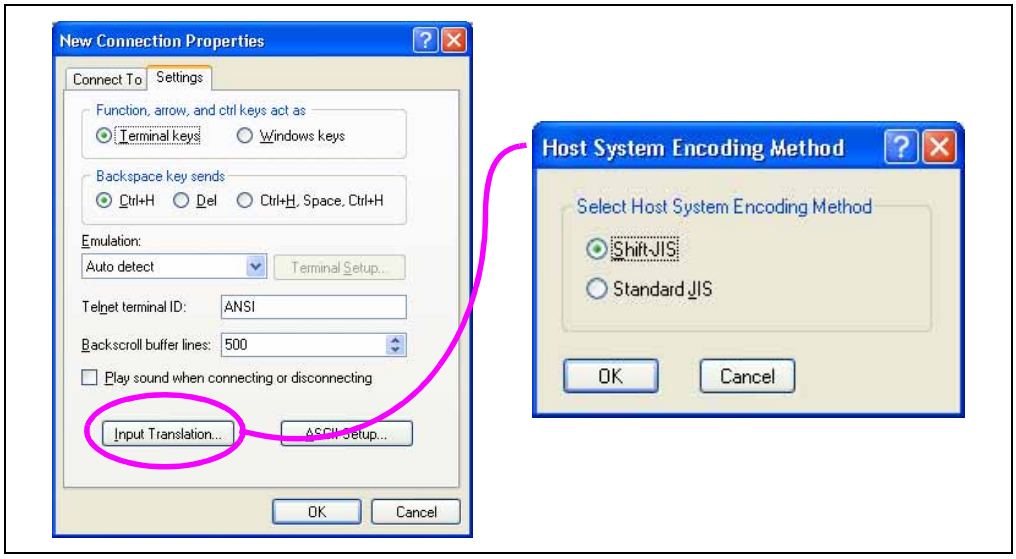

© 2006 Microchip Technology Inc.

Appendix G. MCP215X/40 Connection Sequence Overview

FIGURE G-1: HIGH-LEVEL MCP215X AND MCP2140 CONNECTION SEQUENCE

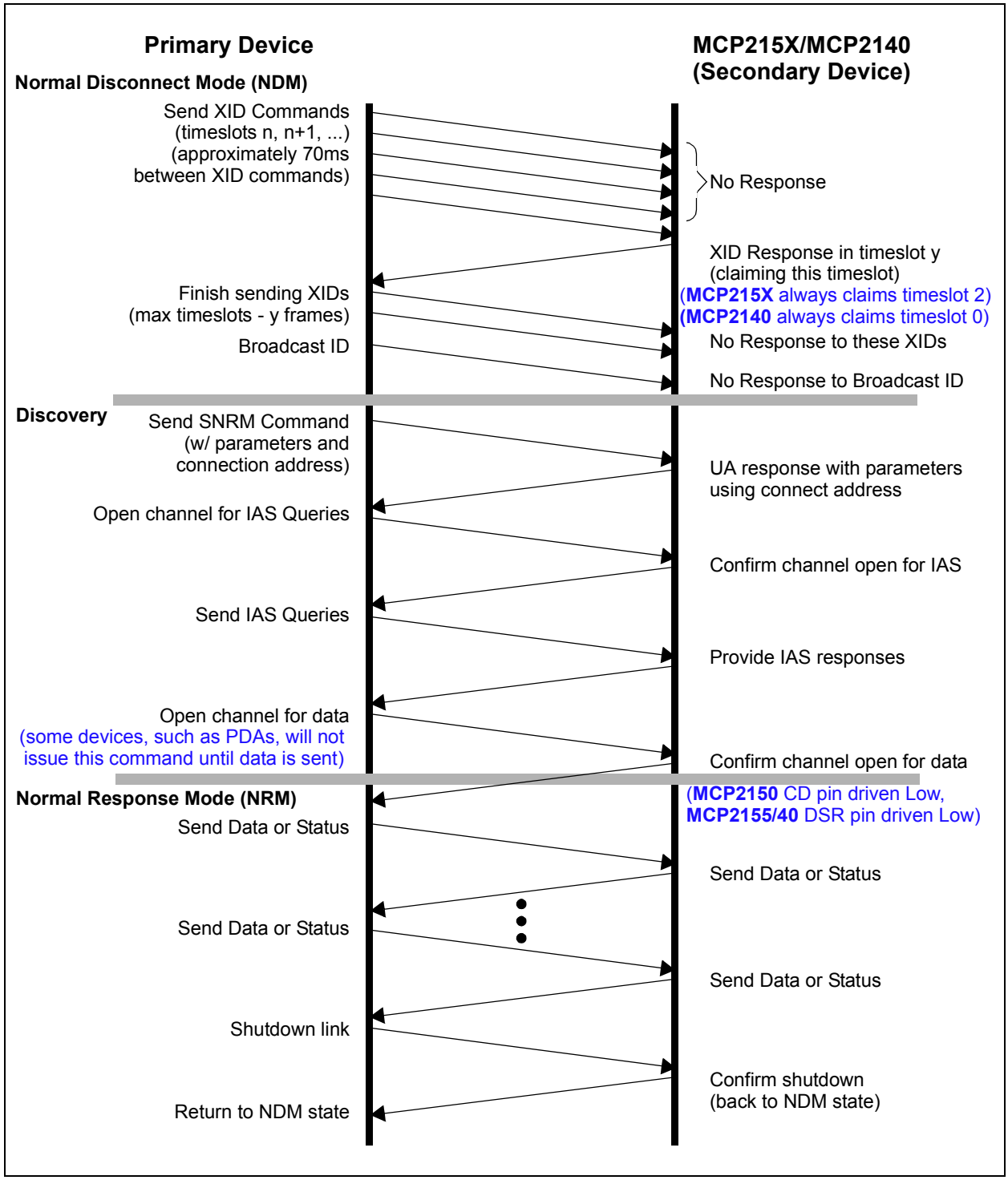

NOTES:

© 2006 Microchip Technology Inc.

Appendix H. MCP215X/40 250-Byte Data Transmit Table

TABLE H-1: PIC16F877 250-BYTE DATA TRANSMIT TABLE

Line #	
	TXTBL DT D'250' ; the first byte is the byte count
	; 1 Characters
1	DT "12345678", 0x0D, 0x0A ; 10 Characters
2	DT "2BCDEFGH", 0x0D, 0x0A ; 10 Characters
3	DT "32345678", 0x0D, 0x0A ; 10 Characters
4	DT "4bcdefgh", 0x0D, 0x0A ; 10 Characters
5	DT "52345678", 0x0D, 0x0A ; 10 Characters
6	DT "6BCDEFGH", 0x0D, 0x0A ; 10 Characters
7	DT "72345678", 0x0D, 0x0A ; 10 Characters
8	DT "8bcdefgh", 0x0D, 0x0A ; 10 Characters
9	DT "92345678", 0x0D, 0x0A ; 10 Characters
10	DT "ABCDEFGH", 0x0D, 0x0A ; 10 Characters
11	DT "B2345678", 0x0D, 0x0A ; 10 Characters
12	DT "Cbcdefgh", 0x0D, 0x0A ; 10 Characters
13	DT "D2345678", 0x0D, 0x0A ; 10 Characters
14	DT "EBCDEFGH", 0x0D, 0x0A ; 10 Characters
15	DT "F2345678", 0x0D, 0x0A ; 10 Characters
16	DT "1bcdefgh", 0x0D, 0x0A ; 10 Characters
17	DT "22345678", 0x0D, 0x0A ; 10 Characters
18	DT "3BCDEFGH", 0x0D, 0x0A ; 10 Characters
19	DT "42345678", 0x0D, 0x0A ; 10 Characters
20	DT "5bcdefgh", 0x0D, 0x0A ; 10 Characters
21	DT "62345678", 0x0D, 0x0A ; 10 Characters
22	DT "7BCDEFGH", 0x0D, 0x0A ; 10 Characters
23	DT "82345678", 0x0D, 0x0A ; 10 Characters
24	DT "9bcdefgh", 0x0D, 0x0A ; 10 Characters
25	DT "a2345678", 0x0D, 0x0A ; 10 Characters
	;
	; NOTE: 0x0D = Carriage Return, 0x0A = Line Feed
	;

NOTES:

© 2006 Microchip Technology Inc.

Appendix I. Alternate Optical Transceiver Implementation

I.1 INTRODUCTION

This appendix contains the description for implementing either of the other two optical transceiver implementations.

Note 1: When performing either of these alternate optical transceiver implementations, please make sure to remove all of the components that are related to the TFDU 4100 implementation.

2: Some component value modifications may be required to ensure that the IR131A electrical specification is met. This may require different values for the following components R13, R18, R16, R17, C9 and Q6 (which may then require R15 and R20).

I.2 HIGHLIGHTS

Diagrams included in this appendix:

- Vishay TFDU 4300 implementation
- Agilent HSDL 3000 implementation

I.3 VISHAY TFDU 4100 IMPLEMENTATION

Figure I-1 shows the schematic for the TFDU 4100 circuit and the ECN change that needs to be implemented. Figure I-2 shows how to make this correction on the layout.

FIGURE I-1: TFDU 4100 OPTICAL TRANSCEIVER ECN - SCHEMATIC

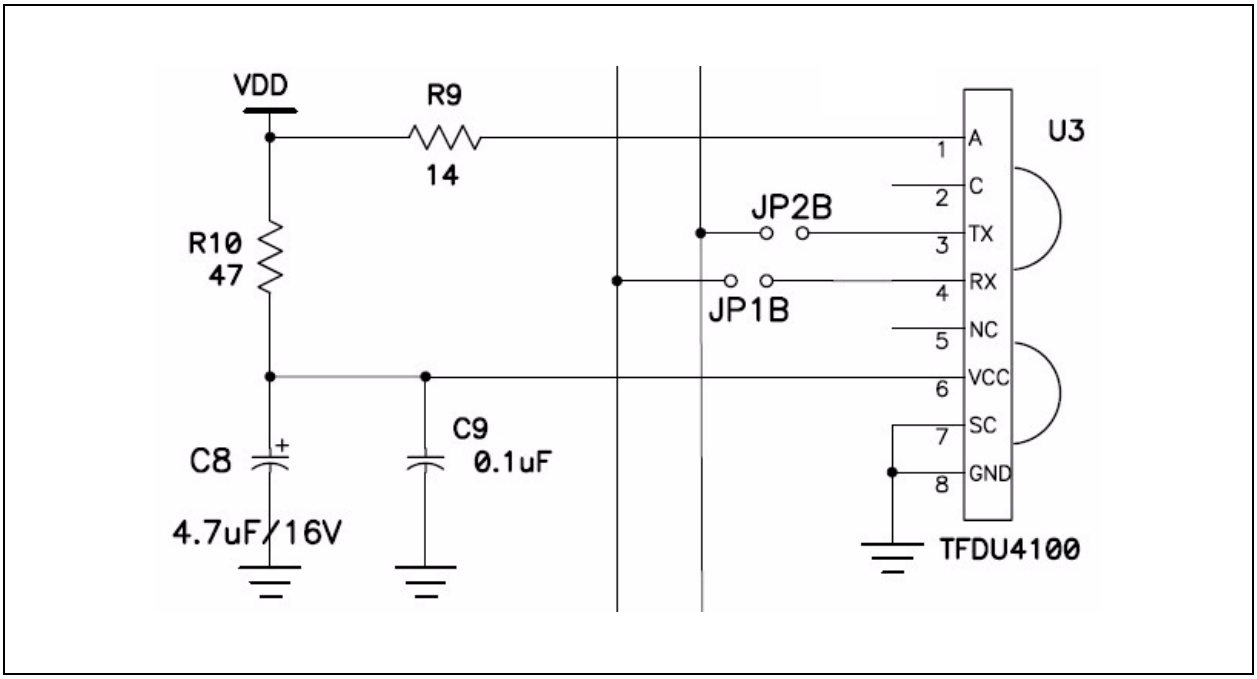

FIGURE I-2: TFDU 4300 OPTICAL TRANSCEIVER ECN - LAYOUT

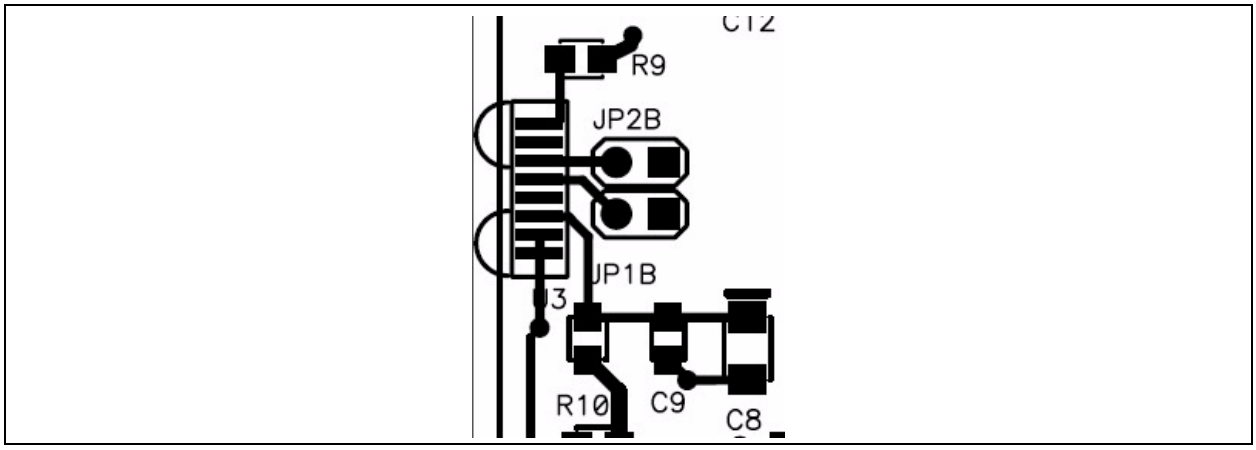

© 2006 Microchip Technology Inc.

I.4 AGILENT

HSDL 3000 Implementation

Figure I-3 shows the correction to the schematic for the HSDL 3000 to be implemented. Figure I-4 shows how to make this correction on the layout.

FIGURE I-3: HSDL 3000 OPTICAL TRANSCEIVER ECN - SCHEMATIC

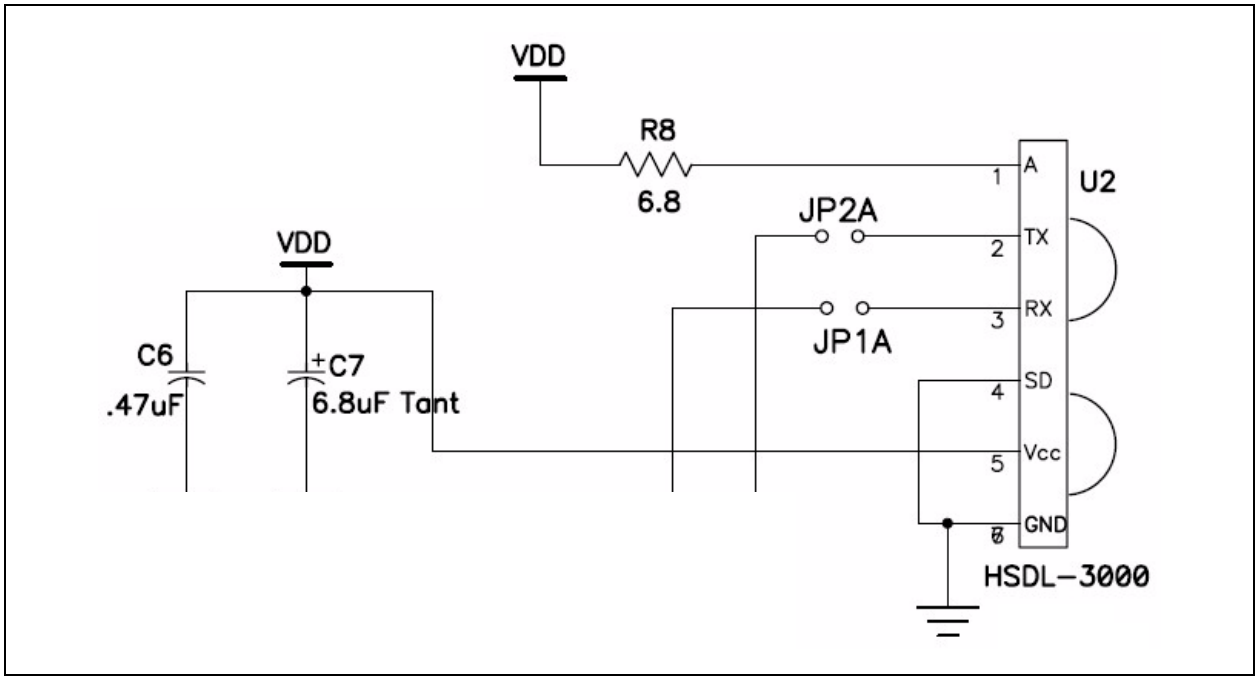

FIGURE I-4: HSDL 3000 OPTICAL TRANSCEIVER ECN - LAYOUT

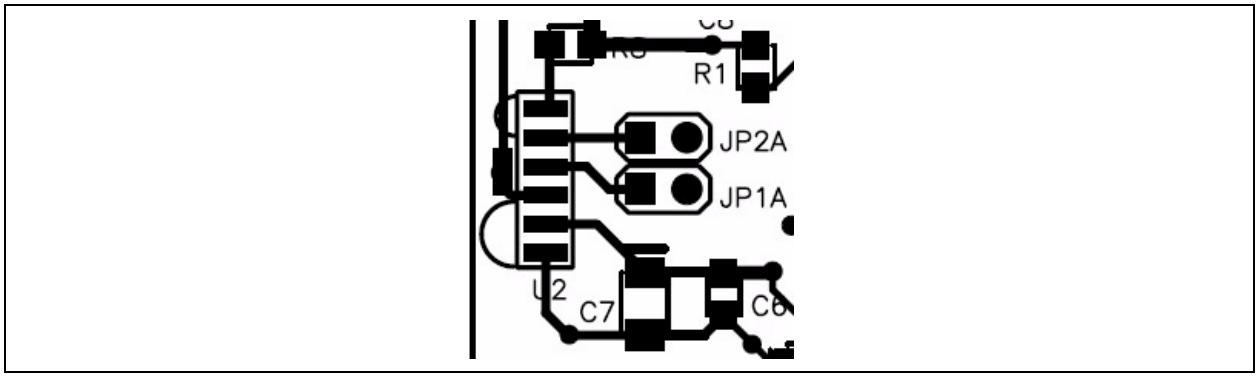

NOTES:

© 2006 Microchip Technology Inc.

Appendix J. PCB Silk-Screen Clarification

J.1 INTRODUCTION

This appendix contains the clarification for the PCB silk-screen. On jumper JMP4, the labels should read DTE and DCE. The DTE setting is for the MCP2150, while the DCE setting is for the MCP2155 and the MCP2140.

FIGURE J-1: PCB SILK-SCREEN CORRECTION

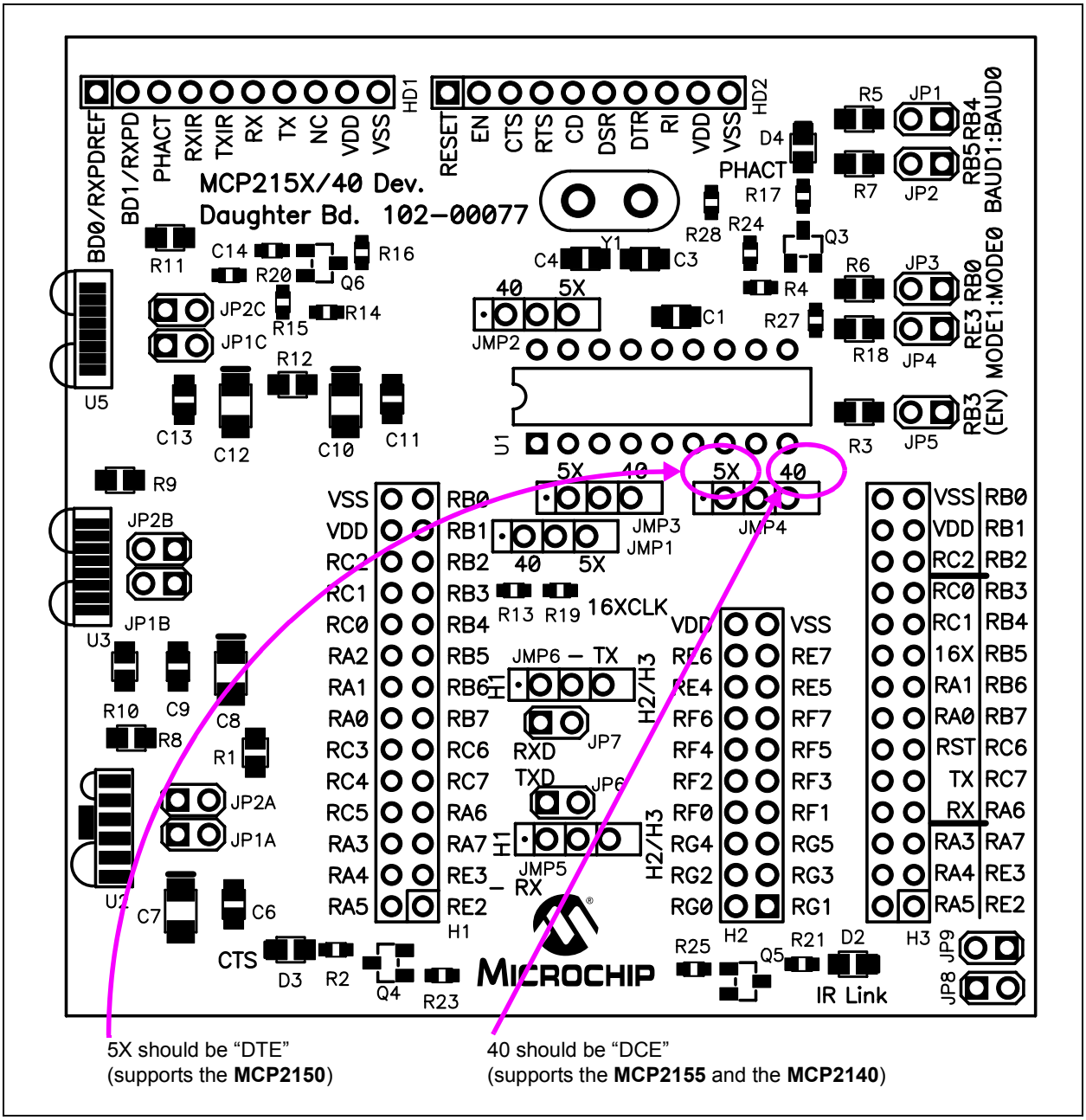

WORLDWIDE SALES AND SERVICE

AMERICAS

Corporate Office
2355 West Chandler Blvd.
Chandler, AZ 85224-6199
Tel: 480-792-7200
Fax: 480-792-7277
Technical Support:
http://support.microchip.com
Web Address:
www.microchip.com

Atlanta
Alpharetta, GA
Tel: 770-640-0034
Fax: 770-640-0307

Boston
Westborough, MA
Tel: 774-760-0087
Fax: 774-760-0088

Chicago
Itasca, IL
Tel: 630-285-0071
Fax: 630-285-0075

Dallas
Addison, TX
Tel: 972-818-7423
Fax: 972-818-2924

Detroit
Farmington Hills, MI
Tel: 248-538-2250
Fax: 248-538-2260

Kokomo
Kokomo, IN
Tel: 765-864-8360
Fax: 765-864-8387

Los Angeles
Mission Viejo, CA
Tel: 949-462-9523
Fax: 949-462-9608

San Jose
Mountain View, CA
Tel: 650-215-1444
Fax: 650-961-0286

Toronto
Mississauga, Ontario,
Canada
Tel: 905-673-0699
Fax: 905-673-6509

ASIA/PACIFIC

Australia - Sydney
Tel: 61-2-9868-6733
Fax: 61-2-9868-6755

China - Beijing
Tel: 86-10-8528-2100
Fax: 86-10-8528-2104

China - Chengdu
Tel: 86-28-8676-6200
Fax: 86-28-8676-6599

China - Fuzhou
Tel: 86-591-8750-3506
Fax: 86-591-8750-3521

China - Hong Kong SAR
Tel: 852-2401-1200
Fax: 852-2401-3431

China - Qingdao
Tel: 86-532-8502-7355
Fax: 86-532-8502-7205

China - Shanghai
Tel: 86-21-5407-5533
Fax: 86-21-5407-5066

China - Shenyang
Tel: 86-24-2334-2829
Fax: 86-24-2334-2393

China - Shenzhen
Tel: 86-755-8203-2660
Fax: 86-755-8203-1760

China - Shunde
Tel: 86-757-2839-5507
Fax: 86-757-2839-5571

China - Wuhan
Tel: 86-27-5980-5300
Fax: 86-27-5980-5118

China - Xian
Tel: 86-29-8833-7250
Fax: 86-29-8833-7256

ASIA/PACIFIC

India - Bangalore
Tel: 91-80-4182-8400
Fax: 91-80-4182-8422

India - New Delhi
Tel: 91-11-5160-8631
Fax: 91-11-5160-8632

India - Pune
Tel: 91-20-2566-1512
Fax: 91-20-2566-1513

Japan - Yokohama
Tel: 81-45-471- 6166
Fax: 81-45-471-6122

Korea - Gumi
Tel: 82-54-473-4301
Fax: 82-54-473-4302

Korea - Seoul
Tel: 82-2-554-7200
Fax: 82-2-558-5932 or
82-2-558-5934

Malaysia - Penang
Tel: 60-4-646-8870
Fax: 60-4-646-5086

Philippines - Manila
Tel: 63-2-634-9065
Fax: 63-2-634-9069

Singapore
Tel: 65-6334-8870
Fax: 65-6334-8850

Taiwan - Hsin Chu
Tel: 886-3-572-9526
Fax: 886-3-572-6459

Taiwan - Kaohsiung
Tel: 886-7-536-4818
Fax: 886-7-536-4803

Taiwan - Taipei
Tel: 886-2-2500-6610
Fax: 886-2-2508-0102

Thailand - Bangkok
Tel: 66-2-694-1351
Fax: 66-2-694-1350

EUROPE

Austria - Wels
Tel: 43-7242-2244-399
Fax: 43-7242-2244-393

Denmark - Copenhagen
Tel: 45-4450-2828
Fax: 45-4485-2829

France - Paris
Tel: 33-1-69-53-63-20
Fax: 33-1-69-30-90-79

Germany - Munich
Tel: 49-89-627-144-0
Fax: 49-89-627-144-44

Italy - Milan
Tel: 39-0331-742611
Fax: 39-0331-466781

Netherlands - Drunen
Tel: 31-416-690399
Fax: 31-416-690340

Spain - Madrid
Tel: 34-91-708-08-90
Fax: 34-91-708-08-91

UK - Wokingham
Tel: 44-118-921-5869
Fax: 44-118-921-5820

02/16/06

© 2006 Microchip Technology Inc.