MCP1726
Feature-Rich, Low Dropout Regulator for High-Performance Microprocessor Applications

Microchip continues to expand its portfolio of Low Dropout Regulators (LDOs) with its new **MCP1726** ceramic output cap stable, low output voltage regulator.

The MCP1726 is the only 1-amp LDO, stable with ceramic capacitors that incorporates low output voltage, Power Good and user-programmable Power Good delay on-chip, providing an ideal solution for a variety of high-performance system applications.

An Innovative Design

Technology innovation continues to drive microprocessor development onto smaller geometries, requiring separate voltages for the core and I/O. The MCP1726 meets these requirements with high output current and low core voltage, making it an ideal solution for the growing number of applications using high-performance general-purpose embedded processors and next-generation logic cores. These applications include:

- **Computers** (PC motherboards, PC add-in cards and graphics processor cards)
- **Consumer** (high-end digital set top boxes, high-end television sets and LCD projection devices)
- **Industry/power supplies** (SMPS post regulators and automated control systems)

The MCP1726 LDO features output voltage down to 0.8V at 1 amp output current, supporting next-generation high-performance CPUs and logic cores. The output voltage setting can be adjusted from 0.8V to 5.0V using two external resistors, or set to a predetermined fixed value such as 0.8V, 1.2V, 1.8V, 2.5V, 3.3V and 5.0V.

The MCP1726 monitors its output voltage internally and provides Power Good output when the output is within 92% of regulation. An external capacitor can be used on the Cdelay pin to adjust the delay from 1 µs to 300 µs. The typical default delay is 200 µs. Using CMOS construction, the internal quiescent current of the MCP1726 is typically less than 140 µA. When the LDO is shut down, the quiescent current is less than 0.1 µA.

The LDO is stable with a 1 microfarad ceramic output capacitor, reducing cost and board space. The power good output with programmable delay option allows engineers to program a system delay on a wider time frame, providing additional flexibility for the design and reducing customer inventory.

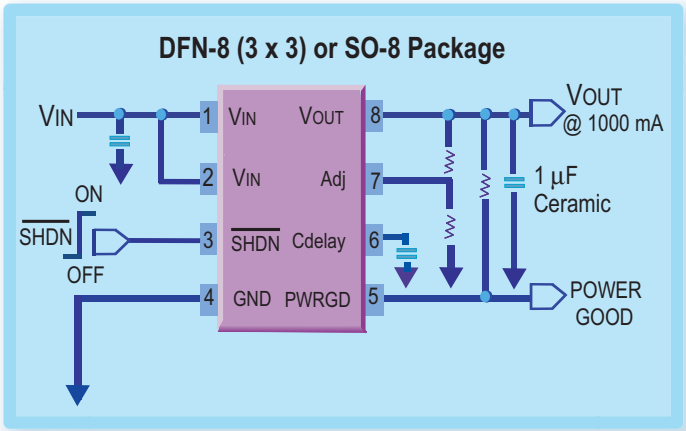

Key Features of the MCP1726

- Up to 1A output load current
- Power Good output with adjustable delay
- Stable with 1.0 µF ceramic output cap
- Over-current and over-temperature protection/thermal shutdown
- A 140 microamp maximum ground current for optimum energy efficiency
- A small, 8-pin DFN package for space-constrained applications
- Shutdown and/or Reset options
- Fold-back output current limit
- Supported temperature range of -40°C to +125°C.
- Low dropout voltage of 150 mV @ 1A typical
- Fast response to load and line transients

MICROCHIP
Power Management

Additional Information

- MCP1726 Data Sheet, DS21936
- Microchip Stand-Alone Analog and Interface Solutions Guide, DS21060
- Microchip Product Selector Guide, DS00148

- For online sampling, go to: www.sample.microchip.com
- For online purchasing, go to: www.buy.microchip.com

Sampling and Purchasing Information

The MCP1726 LDO is available today for sampling and volume production in Pb-free 8-pin DFN and SOIC packages.

Visit Microchip's web site for complete details, or contact any Microchip sales representative or authorized Microchip distributor around the world.

MCP1726 Product Specifications

MCP1726 Ceramic-output Cap-stable, Low Output Voltage Regultator Specifications											
Product	**Output Voltage**	**Output Current**	**VCC Range**	**Junction Temperature Range**	**Typical Supply Current**	**Typical Dropout Voltage @ Max. IOUT**	**Typical Output Voltage Accuracy**	**SHDN**	**Programmable Power Good**	**Package**	**Packing**
MCP1726	0.8V, 1.2V, 1.8V, 2.5V, 3.3V, 5.0V, ADJ	1000 mA	2.3V to 6.0V	-40°C to 125°C	140 µA	150 mV	±1%	Yes	Yes	SO-8, DFN-8 (3X3)	Tube, Tape & Reel

Sales Offices

AMERICAS

Atlanta	770-640-0034
Boston	774-760-0087
Chicago	630-285-0071
Dallas	972-818-7423
Detroit	248-538-2250
Kokomo	765-864-8360
Los Angeles	949-462-9523
San Jose	650-215-1444
Toronto	905-673-0699

ASIA/PACIFIC

Australia	61-2-9868-6733
China-Beijing	86-10-8528-2100
China-Chengdu	86-28-8676-6200
China-Fuzhou	86-591-8750-3506
China-Hong Kong	852-2401-1200
China-Shanghai	86-21-5407-5533
China-Shenyang	86-24-2334-2829
China-Shenzhen	86-755-8203-2660
China-Shunde	86-757-2839-5507
China-Qingdao	86-532-502-7355
India-Bangalore	91-80-2229-0061
India-New Delhi	91-11-5160-8632
Japan-Kanagawa	81-45-471-6166
Korea-Seoul	82-2-554-7200
Singapore	65-6334-8870
Taiwan-Kaohsiung	886-7-536-4818
Taiwan-Taipei	886-2-2500-6610
Taiwan-Hsinchu	886-3-572-9526

EUROPE

Austria-Wels	43-7242-2244-399
Denmark-Ballerup	45-4420-9895
France-Massy	33-1-69-53-63-20
Germany-Ismaning	49-89-627-144-0
Italy-Milan	39-0331-742611
Netherlands-Drunen	31-416-690399
England-Berkshire	44-118-921-5869

3/1/05

MICROCHIP

www.microchip.com

Microchip Technology Inc. • 2355 W. Chandler Blvd. • Chandler, AZ 85224-6199

MICROCONTROLLERS • DIGITAL SIGNAL CONTROLLERS • ANALOG • SERIAL EEPROMS

Information subject to change. The Microchip name and logo and the Microchip logo are registered trademarks of Microchip Technology Incorporated in the U.S.A. and other countries. All other trademarks mentioned herein are property of their respective companies. © 2005, Microchip Technology Incorporated. All Rights Reserved. Printed in the U.S.A. 3/05

DS21926A