MCP1640/B/C/D

0.65V Start-up Synchronous Boost Regulator with True Output Disconnect or Input/Output Bypass Option

Features

- Up to 96% Typical Efficiency
- 800 mA Typical Peak Input Current Limit:
  - I_{OUT} > 100 mA @ 1.2V V_{IN}, 3.3V V_{OUT}
  - I_{OUT} > 350 mA @ 2.4V V_{IN}, 3.3V V_{OUT}
  - I_{OUT} > 350 mA @ 3.3V V_{IN}, 5.0V V_{OUT}
- Low Start-up Voltage: 0.65V, typical 3.3V V_{OUT} @ 1 mA
- Low Operating Input Voltage: 0.35V, typical 3.3V_{OUT} @ 1 mA
- Adjustable Output Voltage Range: 2.0V to 5.5V
- Maximum Input Voltage ≤ V_{OUT} < 5.5V
- Automatic PFM/PWM Operation (MCP1640/C):
  - PFM Operation Disabled (MCP1640B/D)
  - PWM Operation: 500 kHz
- Low Device Quiescent Current: 19 µA, typical PFM Mode
- Internal Synchronous Rectifier
- Internal Compensation
- Inrush Current Limiting and Internal Soft-Start
- Selectable, Logic Controlled, Shutdown States:
  - True Load Disconnect Option (MCP1640/B)
  - Input to Output Bypass Option (MCP1640C/D)
- Shutdown Current (All States): < 1 µA
- Low Noise, Anti-Ringing Control
- Overtemperature Protection
- Available Packages:
  - SOT23-6
  - 2x3 8-Lead DFN

Applications

- One, Two and Three Cell Alkaline and NiMH/NiCd Portable Products
- Single Cell Li-Ion to 5V Converters
- Li Coin Cell Powered Devices
- Personal Medical Products
- Wireless Sensors
- Handheld Instruments
- GPS Receivers
- Bluetooth Headsets
- +3.3V to +5.0V Distributed Power Supply

General Description

The MCP1640/B/C/D is a compact, high-efficiency, fixed frequency, synchronous step-up DC-DC converter. It provides an easy-to-use power supply solution for applications powered by either one-cell, two-cell, or three-cell alkaline, NiCd, NiMH, one-cell Li-Ion or Li-Polymer batteries.

Low-voltage technology allows the regulator to start up without high inrush current or output voltage overshoot from a low 0.65V input. High efficiency is accomplished by integrating the low resistance N-Channel Boost switch and synchronous P-Channel switch. All compensation and protection circuitry are integrated to minimize external components. For standby applications, the MCP1640 operates and consumes only 19 µA while operating at no load and provides a true disconnect from input to output while shut down (EN = GND). Additional device options are available that operate in PWM only mode and connect input to output bypass while shut down.

A “true” load disconnect mode provides input to output isolation while disabled by removing the normal boost regulator diode path from input to output. A bypass mode option connects the input to the output using the integrated low resistance P-Channel MOSFET, which provides a low bias keep alive voltage for circuits operating in Deep Sleep mode. Both options consume less than 1 µA of input current.

Output voltage is set by a small external resistor divider. Two package options, SOT23-6 and 2x3 DFN-8, are available.

Package Types

MCP1640
6-Lead SOT23

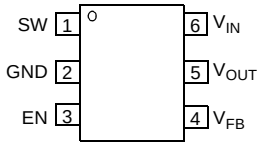

MCP1640
2x3 DFN*

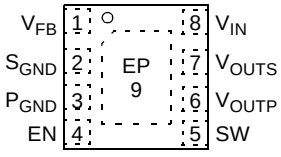

* Includes Exposed Thermal Pad (EP); see Table 3-1.

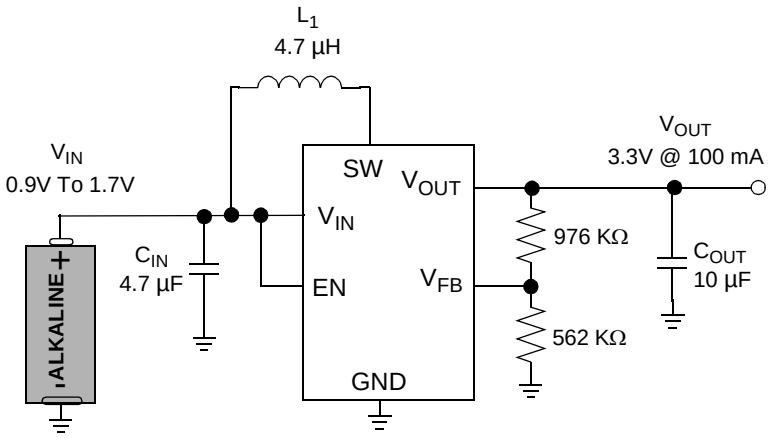

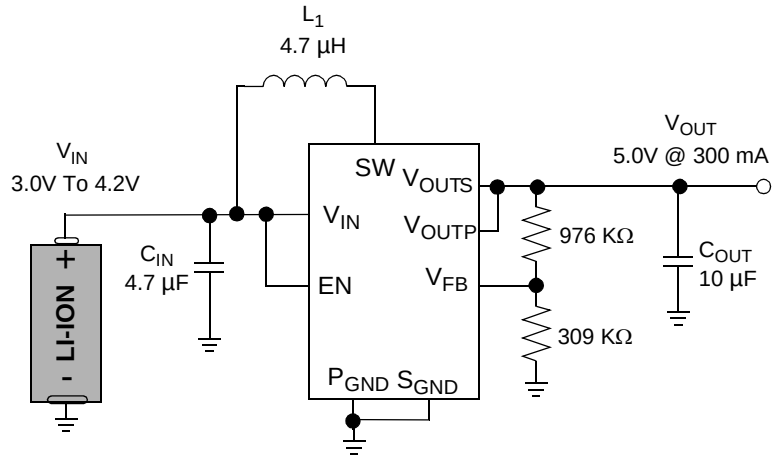

Efficiency vs. I_{OUT} for 3.3V_{OUT}

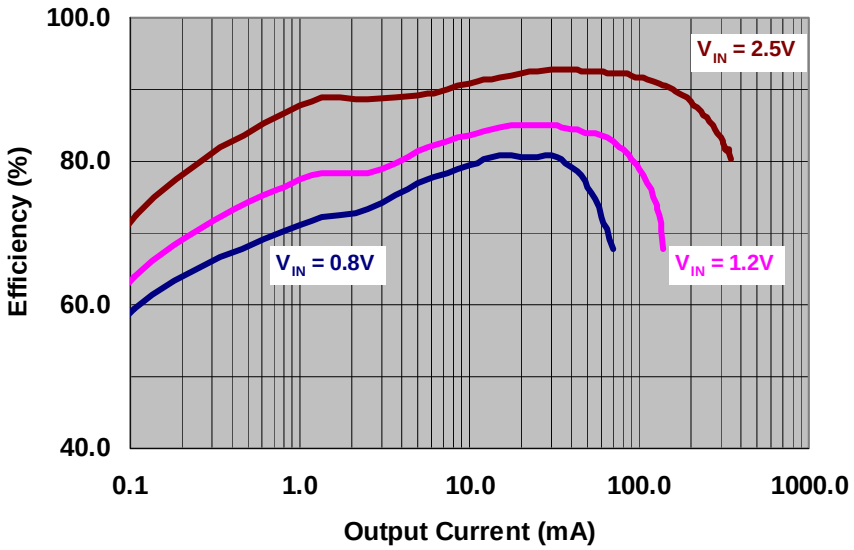

© 2010 Microchip Technology Inc.

1.0 ELECTRICAL CHARACTERISTICS

Absolute Maximum Ratings †

EN, FB, V_{IN}, V_{SW}, V_{OUT} - GND ..... +6.5V
EN, FB ..... <greater of V_{OUT} or V_{IN} > (GND - 0.3V)
Output Short Circuit Current..... Continuous
Output Current Bypass Mode..... 400 mA
Power Dissipation ..... Internally Limited
Storage Temperature .....-65°C to +150°C
Ambient Temp. with Power Applied.....-40°C to +85°C
Operating Junction Temperature.....-40°C to +125°C
ESD Protection On All Pins:
HBM..... 3 kV
MM..... 300 V

† **Notice:** Stresses above those listed under "Maximum Ratings" may cause permanent damage to the device. This is a stress rating only and functional operation of the device at those or any other conditions above those indicated in the operational sections of this specification is not intended. Exposure to maximum rating conditions for extended periods may affect device reliability.

DC CHARACTERISTICS

Electrical Characteristics: Unless otherwise indicated, V_{IN} = 1.2V, C_{OUT} = C_{IN} = 10 µF, L = 4.7 µH, V_{OUT} = 3.3V, I_{OUT} = 15 mA, T_A = +25°C.
Boldface specifications apply over the T_A range of -40°C to +85°C.

Parameters	Sym	Min	Typ	Max	Units	Conditions
Input Characteristics						
Minimum Start-Up Voltage	V_{IN}	—	0.65	**0.8**	V	Note 1
Minimum Input Voltage After Start-Up	V_{IN}	—	0.35	—	V	Note 1
Output Voltage Adjust Range	V_{OUT}	**2.0**		**5.5**	V	$V_{OUT} \geq V_{IN}$; Note 2
Maximum Output Current	I_{OUT}	**100**	150	—	mA	1.2V V_{IN}, 2.0V V_{OUT}
			150	—	mA	1.5V V_{IN}, 3.3V V_{OUT}
			350	—	mA	3.3V V_{IN}, 5.0V V_{OUT}
Feedback Voltage	V_{FB}	**1.175**	1.21	**1.245**	V	—
Feedback Input Bias Current	I_{VFB}	—	10	—	pA	—
Quiescent Current – PFM Mode	I_{QPFM}	—	19	30	µA	Measured at V_{OUT} = 4.0V; EN = V_{IN}, I_{OUT} = 0 mA; Note 3
Quiescent Current – PWM Mode	I_{QPWM}	—	220	—	µA	Measured at V_{OUT}; EN = V_{IN} I_{OUT} = 0 mA; Note 3
Quiescent Current – Shutdown	$I_{Q\overline{SHDN}}$	—	0.7	2.3	µA	V_{OUT} = EN = GND; Includes N-Channel and P-Channel Switch Leakage
NMOS Switch Leakage	I_{NLK}	—	0.3	1	µA	V_{IN} = V_{SW} = 5V; V_{OUT} = 5.5V V_{EN} = V_{FB} = GND
PMOS Switch Leakage	I_{PLK}	—	0.05	0.2	µA	V_{IN} = VS_W = GND; V_{OUT} = 5.5V
NMOS Switch ON Resistance	$R_{DS(ON)N}$	—	0.6	—	Ω	V_{IN} = 3.3V, I_{SW} = 100 mA
PMOS Switch ON Resistance	$R_{DS(ON)P}$	—	0.9	—	Ω	V_{IN} = 3.3V, I_{SW} = 100 mA

Note 1: 3.3 KΩ resistive load, 3.3V_{OUT} (1 mA).
2: For V_{IN} > V_{OUT}, V_{OUT} will not remain in regulation.
3: I_Q is measured from V_{OUT}; V_{IN} quiescent current will vary with boost ratio. V_{IN} quiescent current can be estimated by: (I_{QPFM} * (V_{OUT}/V_{IN})), (I_{QPWM} * (V_{OUT}/V_{IN})).
4: 220Ω resistive load, 3.3V_{OUT} (15 mA).
5: Peak current limit determined by characterization, not production tested.

© 2010 Microchip Technology Inc.

DC CHARACTERISTICS (CONTINUED)

Electrical Characteristics: Unless otherwise indicated, V_{IN} = 1.2V, C_{OUT} = C_{IN} = 10 µF, L = 4.7 µH, V_{OUT} = 3.3V, I_{OUT} = 15 mA, T_A = +25°C.
Boldface specifications apply over the T_A range of -40°C to +85°C.

Parameters	Sym	Min	Typ	Max	Units	Conditions
NMOS Peak Switch Current Limit	$I_{N(MAX)}$	600	850	—	mA	Note 5
V_{OUT} Accuracy	V_{OUT}%	**-3**	—	**+3**	%	Includes Line and Load Regulation; V_{IN} = 1.5V
Line Regulation	$\lvert(\Delta V_{OUT}/V_{OUT}) / \Delta V_{IN}\rvert$	**-1**	0.01	**1**	%/V	V_{IN} = 1.5V to 3V I_{OUT} = 25 mA
Load Regulation	$\lvert\Delta V_{OUT} / V_{OUT}\rvert$	**-1**	0.01	**1**	%	I_{OUT} = 25 mA to 100 mA; V_{IN} = 1.5V
Maximum Duty Cycle	DC_{MAX}	88	90	—	%	
Switching Frequency	f_{SW}	**425**	500	**575**	kHz	
EN Input Logic High	V_{IH}	**90**	—	—	%of V_{IN}	I_{OUT} = 1 mA
EN Input Logic Low	V_{IL}	—	—	**20**	%of V_{IN}	I_{OUT} = 1 mA
EN Input Leakage Current	I_{ENLK}	—	0.005	—	µA	V_{EN} = 5V
Soft-start Time	t_{SS}	—	750	—	µS	EN Low to High, 90% of V_{OUT}; Note 4
Thermal Shutdown Die Temperature	T_{SD}	—	150	—	°C	
Die Temperature Hysteresis	T_{SDHYS}	—	10	—	°C	

Note 1: 3.3 KΩ resistive load, 3.3V_{OUT} (1 mA).

2: For V_{IN} > V_{OUT}, V_{OUT} will not remain in regulation.

3: I_Q is measured from V_{OUT}; V_{IN} quiescent current will vary with boost ratio. V_{IN} quiescent current can be estimated by: (I_{QPFM} * (V_{OUT}/V_{IN})), (I_{QPWM} * (V_{OUT}/V_{IN})).

4: 220Ω resistive load, 3.3V_{OUT} (15 mA).

5: Peak current limit determined by characterization, not production tested.

TEMPERATURE SPECIFICATIONS

Electrical Specifications:						
Parameters	**Sym**	**Min**	**Typ**	**Max**	**Units**	**Conditions**
Temperature Ranges						
Operating Junction Temperature Range	T_J	-40	—	+125	°C	Steady State
Storage Temperature Range	T_A	-65	—	+150	°C	
Maximum Junction Temperature	T_J	—	—	+150	°C	Transient
Package Thermal Resistances						
Thermal Resistance, 5L-TSOT23	θ_{JA}	—	192	—	°C/W	EIA/JESD51-3 Standard
Thermal Resistance, 8L-2x3 DFN	θ_{JA}	—	93	—	°C/W	

© 2010 Microchip Technology Inc.

2.0 TYPICAL PERFORMANCE CURVES

Note: The graphs and tables provided following this note are a statistical summary based on a limited number of samples and are provided for informational purposes only. The performance characteristics listed herein are not tested or guaranteed. In some graphs or tables, the data presented may be outside the specified operating range (e.g., outside specified power supply range) and therefore outside the warranted range.

Note: Unless otherwise indicated, V_{IN} = EN = 1.2V, C_{OUT} = C_{IN} = 10 µF, L = 4.7 µH, V_{OUT} = 3.3V, I_{LOAD} = 15 mA, T_A = +25°C.

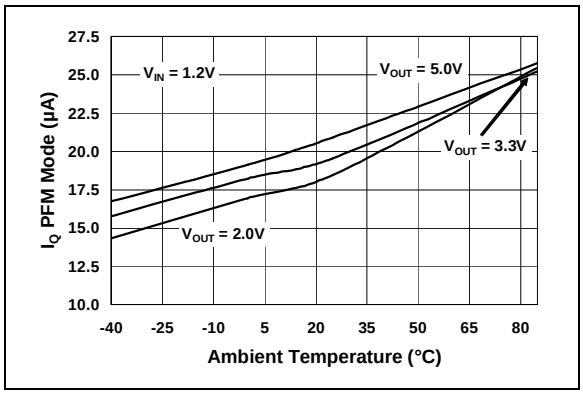

FIGURE 2-1: *V_{OUT} I_Q vs. Ambient Temperature in PFM Mode.*

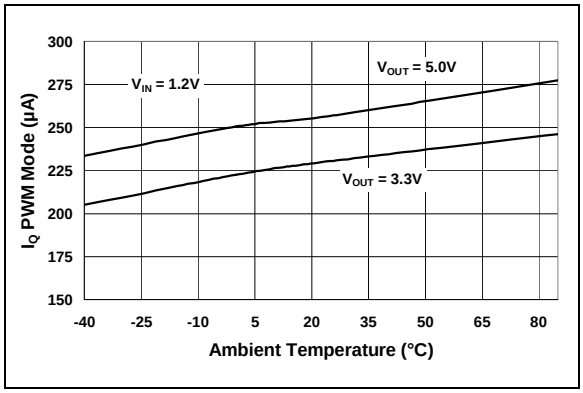

FIGURE 2-2: *V_{OUT} I_Q vs. Ambient Temperature in PWM Mode.*

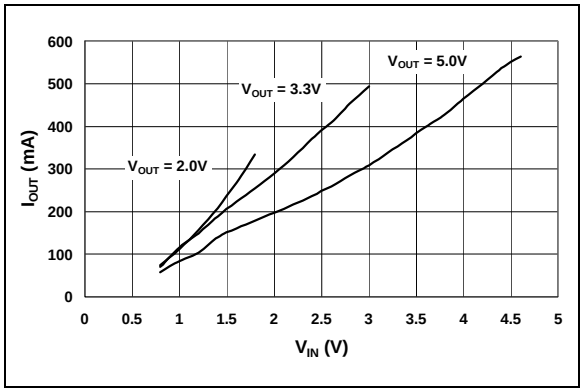

FIGURE 2-3: *Maximum I_{OUT} vs. V_{IN}.*

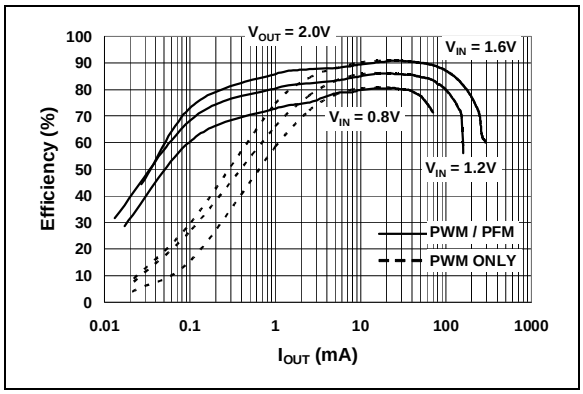

FIGURE 2-4: *2.0V V_{OUT} PFM / PWM Mode Efficiency vs. I_{OUT}.*

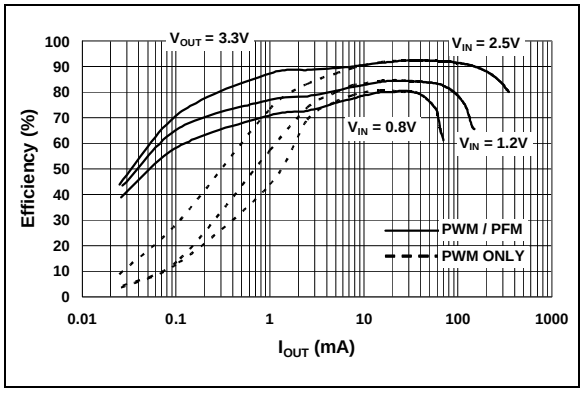

FIGURE 2-5: *3.3V V_{OUT} PFM / PWM Mode Efficiency vs. I_{OUT}.*

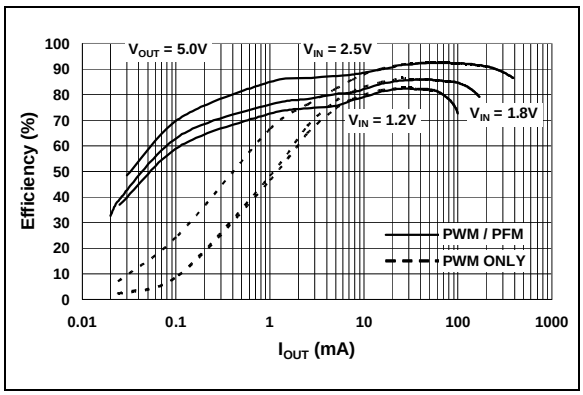

FIGURE 2-6: *5.0V V_{OUT} PFM / PWM Mode Efficiency vs. I_{OUT}.*

Note: Unless otherwise indicated, V_{IN} = EN = 1.2V, C_{OUT} = C_{IN} = 10 µF, L = 4.7 µH, V_{OUT} = 3.3V, I_{LOAD} = 15 mA, T_A = +25°C.

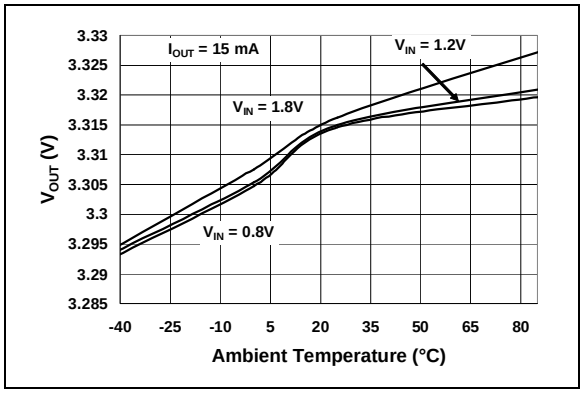

FIGURE 2-7: *3.3V V_{OUT} vs. Ambient Temperature.*

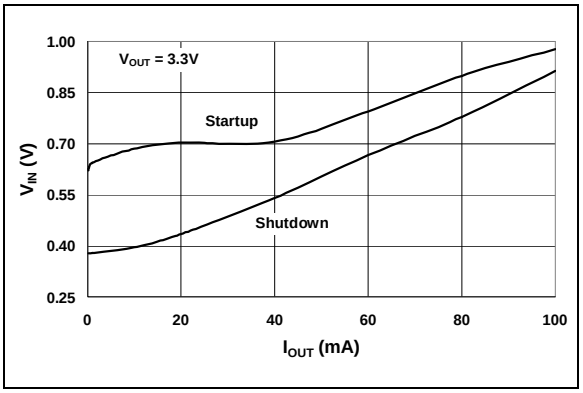

FIGURE 2-10: *Minimum Start-up and Shutdown V_{IN} into Resistive Load vs. I_{OUT}.*

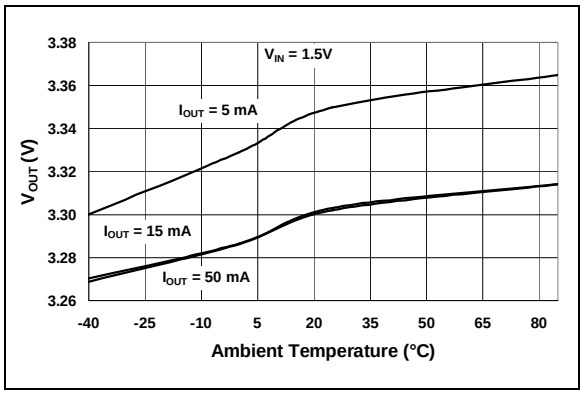

FIGURE 2-8: *3.3V V_{OUT} vs. Ambient Temperature.*

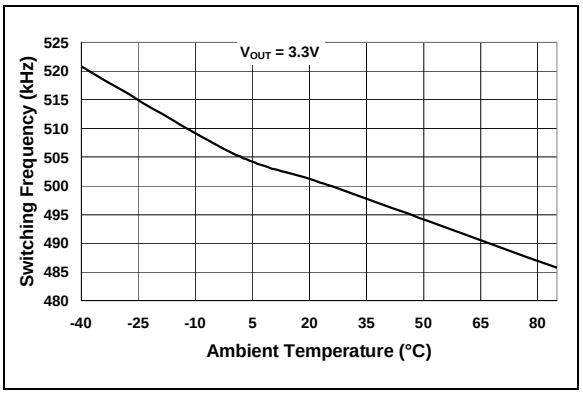

FIGURE 2-11: *F_{OSC} vs. Ambient Temperature.*

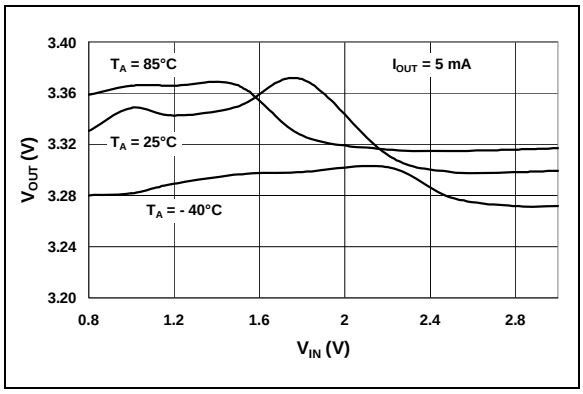

FIGURE 2-9: *3.3V V_{OUT} vs. V_{IN}.*

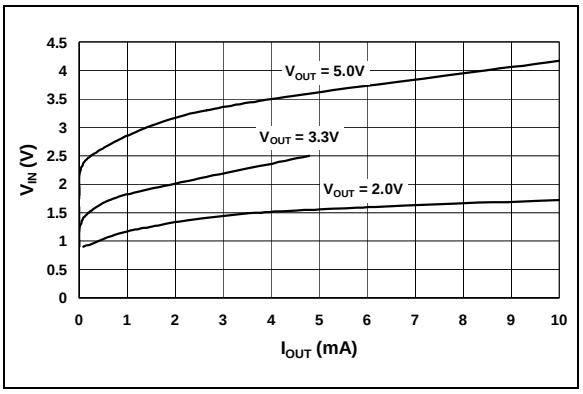

FIGURE 2-12: *PWM Pulse Skipping Mode Threshold vs. I_{OUT}.*

© 2010 Microchip Technology Inc.

Note: Unless otherwise indicated, V_{IN} = EN = 1.2V, C_{OUT} = C_{IN} = 10 µF, L = 4.7 µH, V_{OUT} = 3.3V, I_{LOAD} = 15 mA, T_A = +25°C.

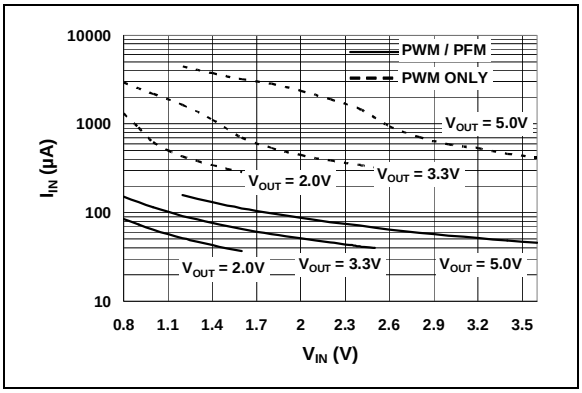

FIGURE 2-13: *Input No Load Current vs. V_{IN}.*

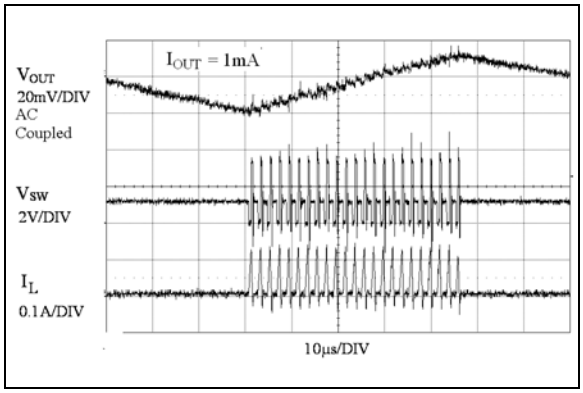

FIGURE 2-16: *MCP1640 3.3V V_{OUT} PFM Mode Waveforms.*

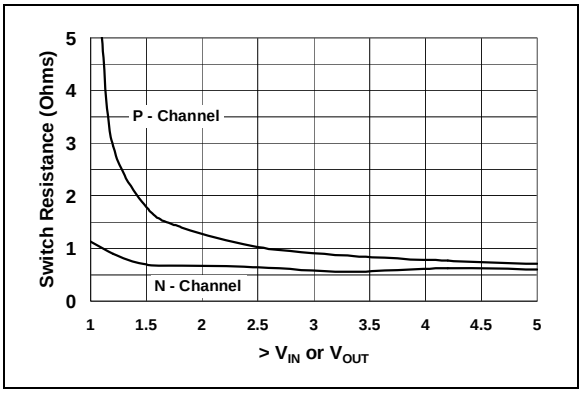

FIGURE 2-14: *N-Channel and P-Channel R_{DSON} vs. > of V_{IN} or V_{OUT}.*

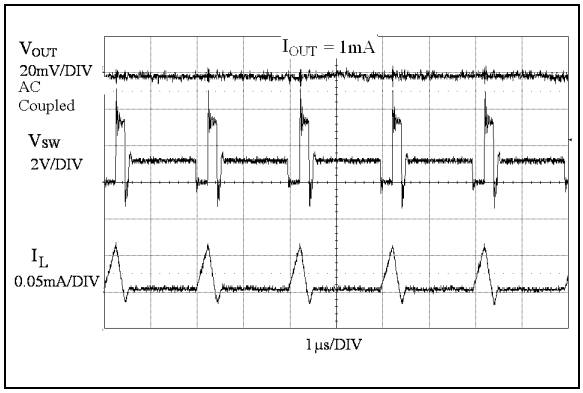

FIGURE 2-17: *MCP1640B 3.3V V_{OUT} PWM Mode Waveforms.*

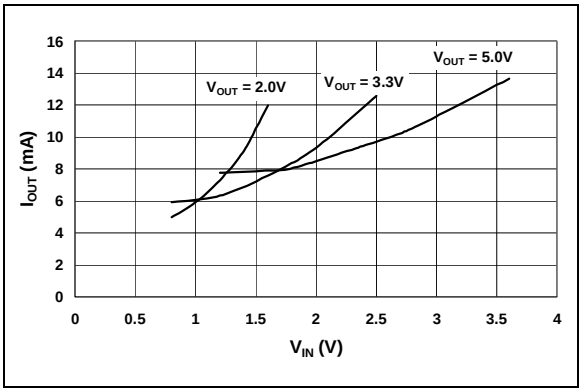

FIGURE 2-15: *PFM / PWM Threshold Current vs. V_{IN}.*

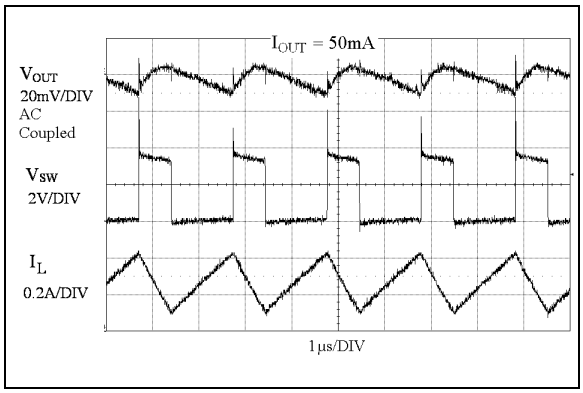

FIGURE 2-18: *MCP1640/B High Load Waveforms.*

Note: Unless otherwise indicated, V_{IN} = EN = 1.2V, C_{OUT} = C_{IN} = 10 µF, L = 4.7 µH, V_{OUT} = 3.3V, I_{LOAD} = 15 mA, T_A = +25°C.

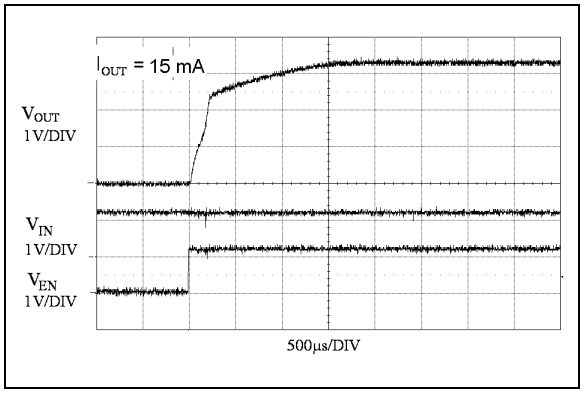

FIGURE 2-19: *3.3V Start-up After Enable.*

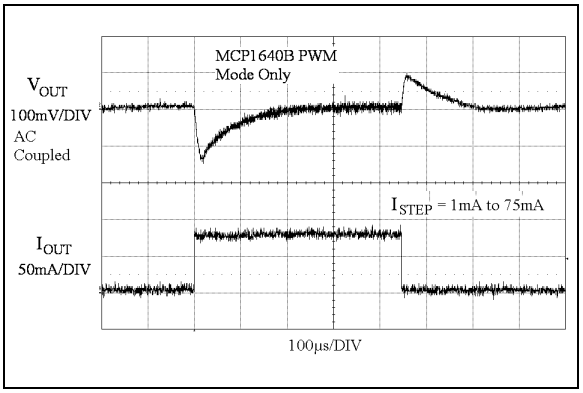

FIGURE 2-22: *MCP1640B 3.3V V_{OUT} Load Transient Waveforms.*

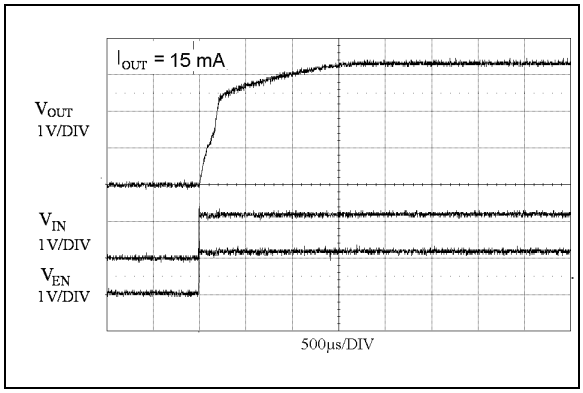

FIGURE 2-20: *3.3V Start-up when V_{IN} = V_{ENABLE}.*

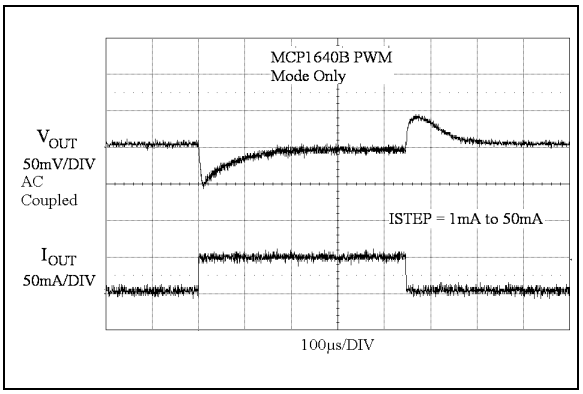

FIGURE 2-23: *MCP1640B 2.0V V_{OUT} Load Transient Waveforms.*

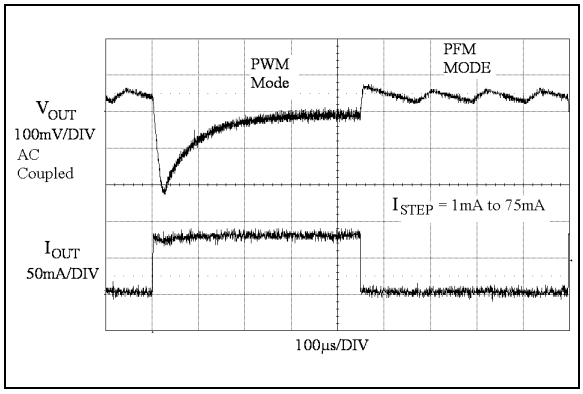

FIGURE 2-21: *MCP1640 3.3V V_{OUT} Load Transient Waveforms.*

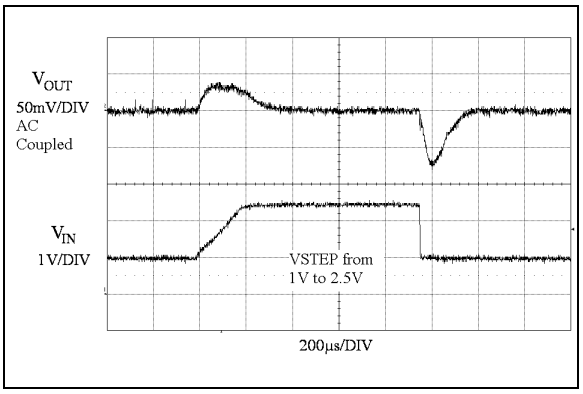

FIGURE 2-24: *3.3V V_{OUT} Line Transient Waveforms.*

© 2010 Microchip Technology Inc.

3.0 PIN DESCRIPTIONS

The descriptions of the pins are listed in Table 3-1.

TABLE 3-1: PIN FUNCTION TABLE

Pin No.	MCP1640/B/C/D SOT23	MCP1640/B/C/D 2x3 DFN	Description
SW	1	5	Switch Node, Boost Inductor Input Pin
GND	2		Ground Pin
EN	3	4	Enable Control Input Pin
FB	4	1	Feedback Voltage Pin
V_{OUT}	5		Output Voltage Pin
V_{IN}	6	8	Input Voltage Pin
S_{GND}		2	Signal Ground Pin
P_{GND}		3	Power Ground Pin
V_{OUTS}		7	Output Voltage Sense Pin
V_{OUTP}		6	Output Voltage Power Pin
EP	—	9	Exposed Thermal Pad (EP); must be connected to V_{SS}.

3.1 Switch Node Pin (SW)

Connect the inductor from the input voltage to the SW pin. The SW pin carries inductor current and can be as high as 800 mA peak. The integrated N-Channel switch drain and integrated P-Channel switch source are internally connected at the SW node.

3.2 Ground Pin (GND)

The ground or return pin is used for circuit ground connection. Length of trace from input cap return, output cap return and GND pin should be made as short as possible to minimize noise on the GND pin. In the SOT23-6 package, a single ground pin is used.

3.3 Enable Pin (EN)

The EN pin is a logic-level input used to enable or disable device switching and lower quiescent current while disabled. A logic high (>90% of V_{IN}) will enable the regulator output. A logic low (<20% of V_{IN}) will ensure that the regulator is disabled.

3.4 Feedback Voltage Pin (FB)

The FB pin is used to provide output voltage regulation by using a resistor divider. The FB voltage will be 1.21V typical with the output voltage in regulation.

3.5 Output Voltage Pin (V_{OUT})

The output voltage pin connects the integrated P-Channel MOSFET to the output capacitor. The FB voltage divider is also connected to the V_{OUT} pin for voltage regulation.

3.6 Power Supply Input Voltage Pin (V_{IN})

Connect the input voltage source to V_{IN}. The input source should be decoupled to GND with a 4.7 µF minimum capacitor.

3.7 Signal Ground Pin (S_{GND})

The signal ground pin is used as a return for the integrated V_{REF} and error amplifier. In the 2x3 DFN package, the S_{GND} and power ground (P_{GND}) pins are connected externally.

3.8 Power Ground Pin (P_{GND})

The power ground pin is used as a return for the high-current N-Channel switch. In the 2x3 DFN package, the P_{GND} and signal ground (S_{GND}) pins are connected externally.

3.9 Output Voltage Sense Pin (V_{OUTS})

The output voltage sense pin connects the regulated output voltage to the internal bias circuits. In the 2x3 DFN package, V_{OUTS} and V_{OUTP} are connected externally.

3.10 Output Voltage Power Pin (V_{OUTP})

The output voltage power pin connects the output voltage to the switch node. High current flows through the integrated P-Channel and out of this pin to the output capacitor and output. In the 2x3 DFN package, V_{OUTS} and V_{OUTP} are connected externally.

3.11 Exposed Thermal Pad (EP)

There is no internal electrical connection between the Exposed Thermal Pad (EP) and the P_{GND} and S_{GND} pins. They must be connected to the same potential on the Printed Circuit Board (PCB).

© 2010 Microchip Technology Inc.

NOTES:

© 2010 Microchip Technology Inc.

4.0 DETAILED DESCRIPTION

4.1 Device Option Overview

The MCP1640/B/C/D family of devices is capable of low start-up voltage and delivers high efficiency over a wide load range for single cell, two cell, three cell alkaline, NiMH, NiCd and single cell Li-Ion battery inputs. A high level of integration lowers total system cost, eases implementation and reduces board area. The devices feature low start-up voltage, adjustable output voltage, PWM/PFM mode operation, low I_Q, integrated synchronous switch, internal compensation, low noise anti-ring control, inrush current limit and soft start. There are two feature options for the MCP1640/B/C/D family: PWM/PFM mode or PWM mode only, and “true output disconnect” or input bypass.

4.1.1 PWM/PFM MODE OPTION

The MCP1640/C devices use an automatic switchover from PWM to PFM mode for light load conditions to maximize efficiency over a wide range of output current. During PFM mode, higher peak current is used to pump the output up to the threshold limit. While operating in PFM or PWM mode, the P-Channel switch is used as a synchronous rectifier, turning off when the inductor current reaches 0 mA to maximize efficiency. In PFM mode, a comparator is used to terminate switching when the output voltage reaches the upper threshold limit. Once switching has terminated, the output voltage will decay or coast down. During this period, very low I_Q is consumed from the device and input source, which keeps power efficiency high at light load. The disadvantages of PWM/PFM mode are higher output ripple voltage and variable PFM mode frequency. The PFM mode frequency is a function of input voltage, output voltage and load. While in PFM mode, the boost converter pumps the output up at a switching frequency of 500 kHz.

4.1.2 PWM MODE ONLY OPTION

The MCP1640B/D devices disable PFM mode switching, and operate only in PWM mode over the entire load range. During periods of light load operation, the MCP1640B/D continues to operate at a constant 500 kHz switching frequency keeping the output ripple voltage lower than PFM mode. During PWM only mode, the MCP1640B/D P-Channel switch acts as a synchronous rectifier by turning off to prevent reverse current flow from the output cap back to the input in order to keep efficiency high. For noise immunity, the N-Channel MOSFET current sense is blanked for approximately 100 ns. With a typical minimum duty cycle of 100 ns, the MCP1640B/D continues to switch at a constant frequency under light load conditions. Figure 2-12 represents the input voltage versus load current for the pulse skipping threshold in PWM only mode. At lighter loads, the MCP1640B/D devices begin to skip pulses.

4.1.3 TRUE OUTPUT DISCONNECT OPTION

The MCP1640/B devices incorporate a true output disconnect feature. With the EN pin pulled low, the output of the MCP1640/B is isolated or disconnected from the input by turning off the integrated P-Channel switch and removing the switch bulk diode connection. This removes the DC path typical in boost converters, which allows the output to be disconnected from the input. During this mode, less than 1 µA of current is consumed from the input (battery). True output disconnect does not discharge the output; the output voltage is held up by the external C_{OUT} capacitance.

4.1.4 INPUT BYPASS OPTION

The MCP1640C/D devices incorporate the input bypass shutdown option. With the EN input pulled low, the output is connected to the input using the internal P-Channel MOSFET. In this mode, the current draw from the input (battery) is less than 1 µA with no load. The Input Bypass mode is used when the input voltage range is high enough for the load to operate in Sleep or low I_Q mode. When a higher regulated output voltage is necessary to operate the application, the EN input is pulled high enabling the boost converter.

TABLE 4-1: PART NUMBER SELECTION

Part Number	PWM/ PFM	PWM	True Dis	Bypass
MCP1640	X		X	
MCP1640B		X	X	
MCP1640C	X			X
MCP1640D		X		X

4.2 Functional Description

The MCP1640/B/C/D is a compact, high-efficiency, fixed frequency, step-up DC-DC converter that provides an easy-to-use power supply solution for applications powered by either one-cell, two-cell, or three-cell alkaline, NiCd, or NiMH, or one-cell Li-Ion or Li-Polymer batteries.

Figure 4-1 depicts the functional block diagram of the MCP1640/B/C/D.

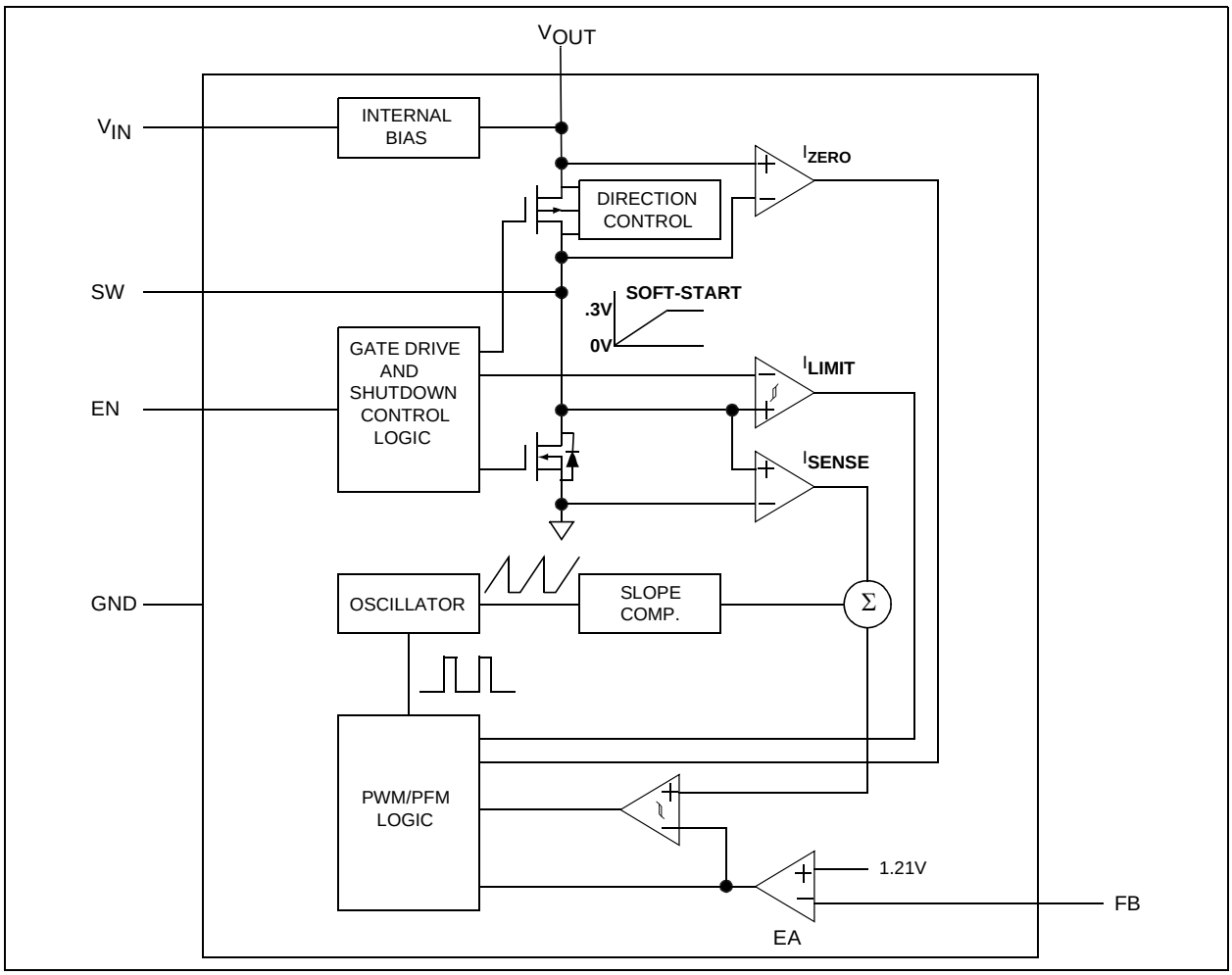

FIGURE 4-1: *MCP1640/B/C/D Block Diagram.*

4.2.1 LOW-VOLTAGE START-UP

The MCP1640/B/C/D is capable of starting from a low input voltage. Start-up voltage is typically 0.65V for a 3.3V output and 1 mA resistive load.

When enabled, the internal start-up logic turns the rectifying P-Channel switch on until the output capacitor is charged to a value close to the input voltage. The rectifying switch is current limited during this time. After charging the output capacitor to the input voltage, the device starts switching. If the input voltage is below 1.6V, the device runs open-loop with a fixed duty cycle of 70% until the output reaches 1.6V. During this time, the boost switch current is limited to 50% of its nominal value. Once the output voltage reaches 1.6V, normal closed-loop PWM operation is initiated.

The MCP1640/B/C/D charges an internal capacitor with a very weak current source. The voltage on this capacitor, in turn, slowly ramps the current limit of the boost switch to its nominal value. The soft-start capacitor is completely discharged in the event of a commanded shutdown or a thermal shutdown.

There is no undervoltage lockout feature for the MCP1640/B/C/D. The device will start up at the lowest possible voltage and run down to the lowest possible voltage. For typical battery applications, this may result in “motor-boating” for deeply discharged batteries.

© 2010 Microchip Technology Inc.

4.2.2 PWM MODE OPERATION

In normal PWM operation, the MCP1640/B/C/D operates as a fixed frequency, synchronous boost converter. The switching frequency is internally maintained with a precision oscillator typically set to 500 kHz. The MCP1640B/D devices will operate in PWM only mode even during periods of light load operation. By operating in PWM only mode, the output ripple remains low and the frequency is constant. Operating in fixed PWM mode results in lower efficiency during light load operation (when compared to PFM mode (MCP1640/C)).

Lossless current sensing converts the peak current signal to a voltage to sum with the internal slope compensation. This summed signal is compared to the voltage error amplifier output to provide a peak current control command for the PWM signal. The slope compensation is adaptive to the input and output voltage. Therefore, the converter provides the proper amount of slope compensation to ensure stability, but is not excessive, which causes a loss of phase margin. The peak current limit is set to 800 mA typical.

4.2.3 PFM MODE OPERATION

The MCP1640/C devices are capable of operating in normal PWM mode and PFM mode to maintain high efficiency at all loads. In PFM mode, the output ripple has a variable frequency component that changes with the input voltage and output current. With no load, the quiescent current draw from the output is typically 19 µA. The PFM mode can be disabled in selected device options.

PFM operation is initiated if the output load current falls below an internally programmed threshold. The output voltage is continuously monitored. When the output voltage drops below its nominal value, PFM operation pulses one or several times to bring the output back into regulation. If the output load current rises above the upper threshold, the MCP1640/C transitions smoothly into PWM mode.

4.2.4 ADJUSTABLE OUTPUT VOLTAGE

The MCP1640/B/C/D output voltage is adjustable with a resistor divider over a 2.0V minimum to 5.5V maximum range. High value resistors are recommended to minimize quiescent current to keep efficiency high at light loads.

4.2.5 ENABLE

The enable pin is used to turn the boost converter on and off. The enable threshold voltage varies with input voltage. To enable the boost converter, the EN voltage level must be greater than 90% of the V_{IN} voltage. To disable the boost converter, the EN voltage must be less than 20% of the V_{IN} voltage.

4.2.6 INTERNAL BIAS

The MCP1640/B/C/D gets its start-up bias from V_{IN}. Once the output exceeds the input, bias comes from the output. Therefore, once started, operation is completely independent of V_{IN}. Operation is only limited by the output power level and the input source series resistance. Once started, the output will remain in regulation down to 0.35V typical with 1 mA output current for low source impedance inputs.

4.2.7 INTERNAL COMPENSATION

The error amplifier, with its associated compensation network, completes the closed loop system by comparing the output voltage to a reference at the input of the error amplifier, and feeding the amplified and inverted signal to the control input of the inner current loop. The compensation network provides phase leads and lags at appropriate frequencies to cancel excessive phase lags and leads of the power circuit. All necessary compensation components and slope compensation are integrated.

4.2.8 SHORT CIRCUIT PROTECTION

Unlike most boost converters, the MCP1640/B/C/D allows its output to be shorted during normal operation. The internal current limit and overtemperature protection limit excessive stress and protect the device during periods of short circuit, overcurrent and overtemperature. While operating in Bypass mode, the P-Channel current limit is inhibited to minimize quiescent current.

4.2.9 LOW NOISE OPERATION

The MCP1640/B/C/D integrates a low noise anti-ring switch that damps the oscillations typically observed at the switch node of a boost converter when operating in the discontinuous inductor current mode. This removes the high frequency radiated noise.

4.2.10 OVERTEMPERATURE PROTECTION

Overtemperature protection circuitry is integrated in the MCP1640/B/C/D. This circuitry monitors the device junction temperature and shuts the device off if the junction temperature exceeds the typical +150°C threshold. If this threshold is exceeded, the device will automatically restart once the junction temperature drops by 10°C. The soft start is reset during an overtemperature condition.

NOTES:

© 2010 Microchip Technology Inc.

5.0 APPLICATION INFORMATION

5.1 Typical Applications

The MCP1640/B/C/D synchronous boost regulator operates over a wide input voltage and output voltage range. The power efficiency is high for several decades of load range. Output current capability increases with input voltage and decreases with increasing output voltage. The maximum output current is based on the N-Channel peak current limit. Typical characterization curves in this data sheet are presented to display the typical output current capability.

5.2 Adjustable Output Voltage Calculations

To calculate the resistor divider values for the MCP1640/B/C/D, the following equation can be used. Where R_{TOP} is connected to V_{OUT}, R_{BOT} is connected to GND and both are connected to the FB input pin.

EQUATION 5-1:

$$R_{TOP} = R_{BOT} \times \left(\frac{V_{OUT}}{V_{FB}} - 1 \right)$$

Example A:

V_{OUT} = 3.3V

V_{FB} = 1.21V

R_{BOT} = 309 kΩ

R_{TOP} = 533.7 kΩ (Standard Value = 536 kΩ)

Example B:

V_{OUT} = 5.0V

V_{FB} = 1.21V

R_{BOT} = 309 kΩ

R_{TOP} = 967.9 kΩ (Standard Value = 976 kΩ)

There are some potential issues with higher value resistors. For small surface mount resistors, environment contamination can create leakage paths that significantly change the resistor divider that effect the output voltage. The FB input leakage current can also impact the divider and change the output voltage tolerance.

5.3 Input Capacitor Selection

The boost input current is smoothed by the boost inductor reducing the amount of filtering necessary at the input. Some capacitance is recommended to provide decoupling from the source. Low ESR X5R or X7R are well suited since they have a low temperature coefficient and small size. For most applications, 4.7 µF of capacitance is sufficient at the input. For high power applications that have high source impedance or long leads, connecting the battery to the input 10 µF of capacitance is recommended. Additional input capacitance can be added to provide a stable input voltage.

Table 5-1 contains the recommended range for the input capacitor value.

5.4 Output Capacitor Selection

The output capacitor helps provide a stable output voltage during sudden load transients and reduces the output voltage ripple. As with the input capacitor, X5R and X7R ceramic capacitors are well suited for this application.

The MCP1640/B/C/D is internally compensated so output capacitance range is limited. See Table 5-1 for the recommended output capacitor range.

While the N-Channel switch is on, the output current is supplied by the output capacitor C_{OUT}. The amount of output capacitance and equivalent series resistance will have a significant effect on the output ripple voltage. While C_{OUT} provides load current, a voltage drop also appears across its internal ESR that results in ripple voltage.

EQUATION 5-2:

$$I_{OUT} = C_{OUT} \times \left(\frac{dV}{dt} \right)$$

Where dV represents the ripple voltage and dt represents the ON time of the N-Channel switch (D * 1/ F_{SW}).

Table 5-1 contains the recommended range for the input and output capacitor value.

TABLE 5-1: CAPACITOR VALUE RANGE

	C_{IN}	C_{OUT}
Min	4.7 µF	10 µF
Max	none	100 µF

5.5 Inductor Selection

The MCP1640/B/C/D is designed to be used with small surface mount inductors; the inductance value can range from 2.2 µH to 10 µH. An inductance value of 4.7 µH is recommended to achieve a good balance between inductor size, converter load transient response and minimized noise.

TABLE 5-2: MCP1640/B/C/D RECOMMENDED INDUCTORS

Part Number	Value (µH)	DCR Ω (typ)	I_{SAT} (A)	Size WxLxH (mm)
Coiltronics®				
SD3110	4.7	0.285	0.68	3.1x3.1x1.0
SD3112	4.7	0.246	0.80	3.1x3.1x1.2
SD3114	4.7	0.251	1.14	3.1x3.1x1.4
SD3118	4.7	0.162	1.31	3.8x3.8x1.2
SD3812	4.7	0.256	1.13	3.8x3.8x1.2
SD25	4.7	0.0467	1.83	5.0x5.0x2.5
Part Number	**Value (µH)**	**DCR Ω (max)**	**I_{SAT} (A)**	**Size WxLxH (mm)**
Wurth Elektronik®				
WE-TPC Type TH	4.7	0.200	0.8	2.8x2.8x1.35
WE-TPC Type S	4.7	0.105	0.90	3.8x3.8x1.65
WE-TPC Type M	4.7	0.082	1.65	4.8x4.8x1.8
WE-TPC Type X	4.7	0.046	2.00	6.8x6.8x2.3
Part Number	**Value (µH)**	**DCR Ω (max)**	**I_{SAT} (A)**	**Size WxLxH (mm)**
Sumida®				
CMH23	4.7	0.537	0.70	2.3x2.3x1.0
CMD4D06	4.7	0.216	0.75	3.5x4.3x0.8
CDRH4D	4.7	0.09	0.800	4.6x4.6x1.5
EPCOS®				
B82462A2 472M000	4.7	0.084	2.00	6.0x6.0x2.5
B82462G4 472M	4.7	0.04	1.8	6.3x6.3x3.0

Several parameters are used to select the correct inductor: maximum rated current, saturation current and copper resistance (ESR). For boost converters, the inductor current can be much higher than the output current. The lower the inductor ESR, the higher the efficiency of the converter, a common trade-off in size versus efficiency.

Peak current is the maximum or limit, and saturation current typically specifies a point at which the inductance has rolled off a percentage of the rated value. This can range from a 20% to 40% reduction in inductance. As inductance rolls off, the inductor ripple current increases as does the peak switch current. It is important to keep the inductance from rolling off too much, causing switch current to reach the peak limit.

5.6 Thermal Calculations

The MCP1640/B/C/D is available in two different packages (SOT23-6 and 2x3 DFN8). By calculating the power dissipation and applying the package thermal resistance, (θ_{JA}), the junction temperature is estimated. The maximum continuous junction temperature rating for the MCP1640/B/C/D is +125°C.

To quickly estimate the internal power dissipation for the switching boost regulator, an empirical calculation using measured efficiency can be used. Given the measured efficiency, the internal power dissipation is estimated by Equation 5-3.

EQUATION 5-3:

$$\left(\frac{V_{OUT} \times I_{OUT}}{Efficiency}\right) - (V_{OUT} \times I_{OUT}) = P_{Dis}$$

The difference between the first term, input power, and the second term, power delivered, is the internal MCP1640/B/C/D power dissipation. This is an estimate assuming that most of the power lost is internal to the MCP1640/B/C/D and not C_{IN}, C_{OUT} and the inductor. There is some percentage of power lost in the boost inductor, with very little loss in the input and output capacitors. For a more accurate estimation of internal power dissipation, subtract the $I_{INRMS}^2 * L_{ESR}$ power dissipation.

5.7 PCB Layout Information

Good printed circuit board layout techniques are important to any switching circuitry and switching power supplies are no different. When wiring the switching high current paths, short and wide traces should be used. Therefore it is important that the input and output capacitors be placed as close as possible to the MCP1640/B/C/D to minimize the loop area.

The feedback resistors and feedback signal should be routed away from the switching node and the switching current loop. When possible, ground planes and traces should be used to help shield the feedback signal and minimize noise and magnetic interference.

© 2010 Microchip Technology Inc.

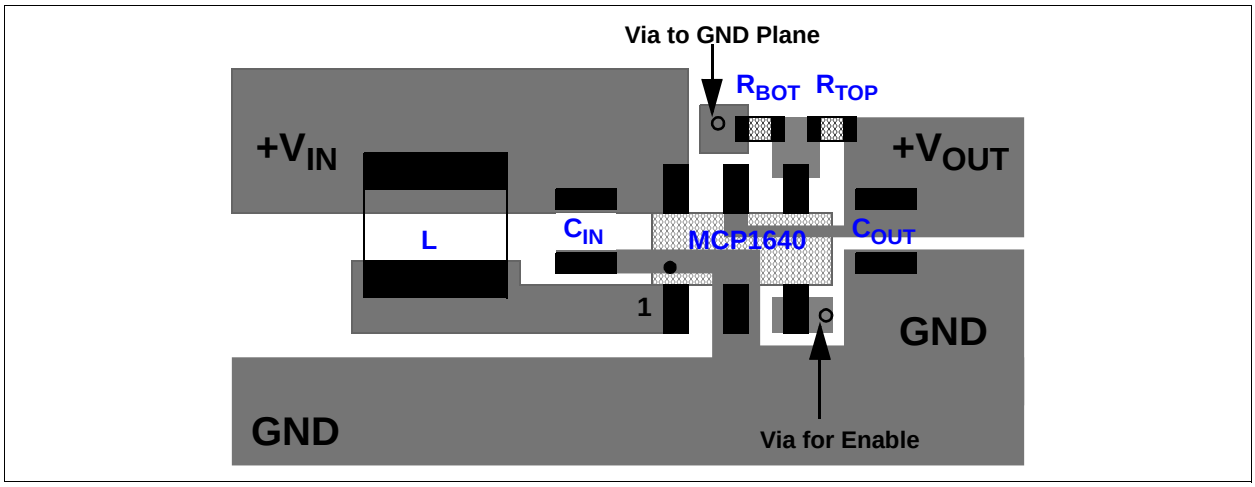

FIGURE 5-1: *MCP1640/B/C/D SOT23-6 Recommended Layout.*

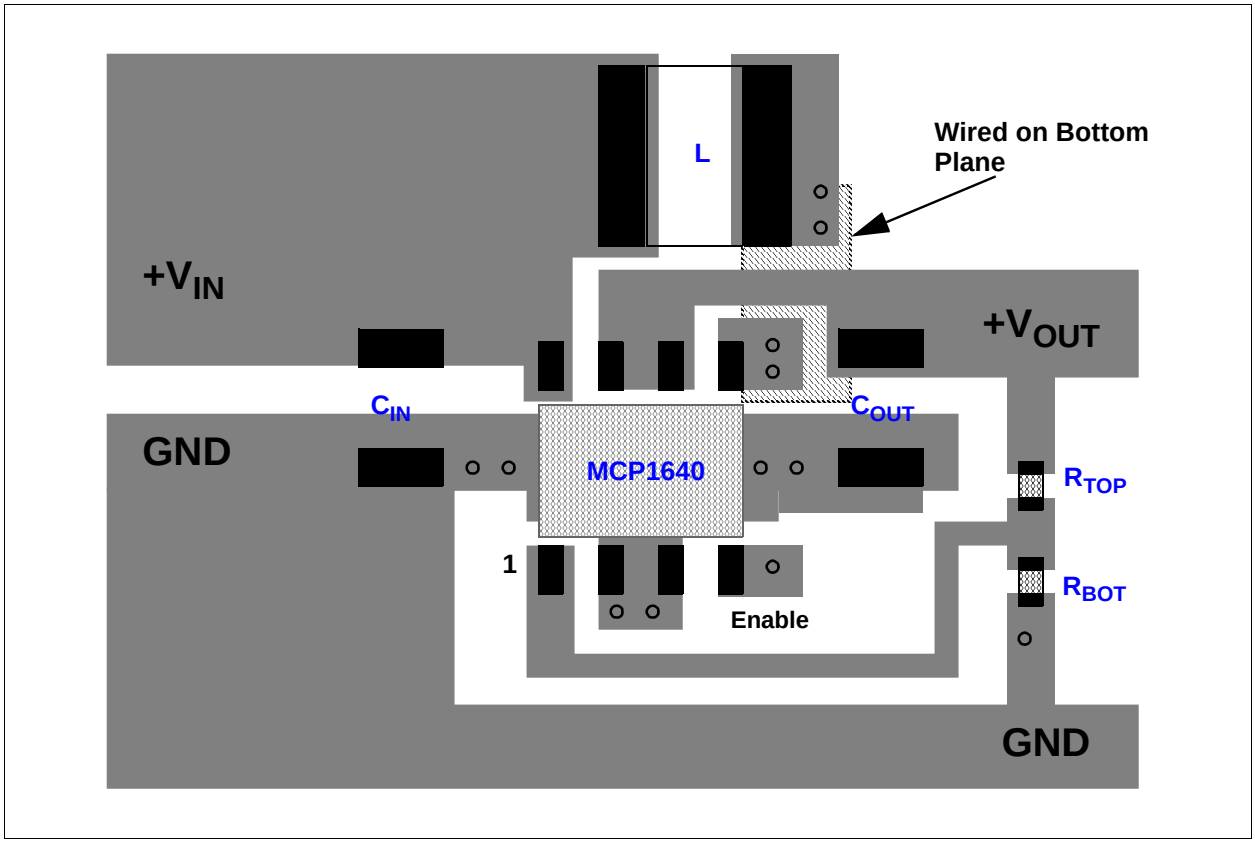

FIGURE 5-2: *MCP1640/B/C/D DFN-8 Recommended Layout.*

NOTES:

© 2010 Microchip Technology Inc.

6.0 TYPICAL APPLICATION CIRCUITS

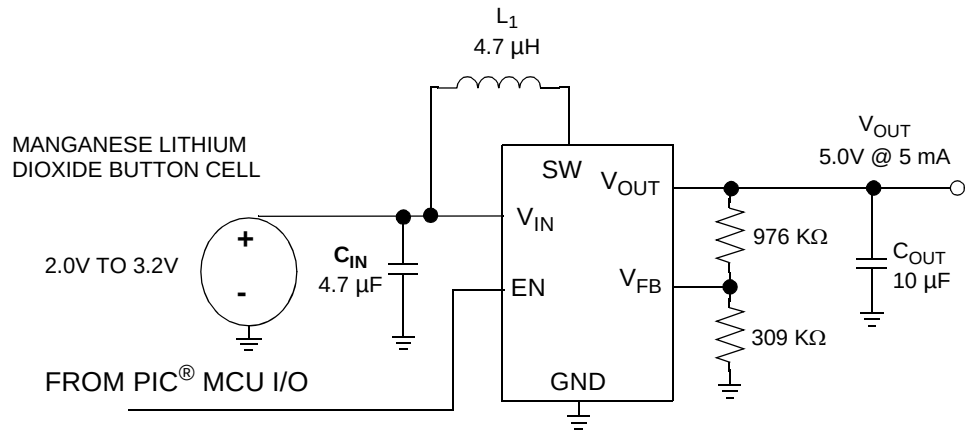

Note: For applications that can operate directly from the battery input voltage during Sleep mode and require a higher voltage during normal run mode, the MCP1640C device provides input to output bypass when disabled. The PIC Microcontroller is powered by the output of the MCP1640C. One of its I/O pins is used to enable and disable the MCP1640C to control its bias voltage. While operating in Sleep mode, the MCP1640C input quiescent current is typically less than 1 uA.

FIGURE 6-1: *Manganese Lithium Coin Cell Application using Bypass Mode.*

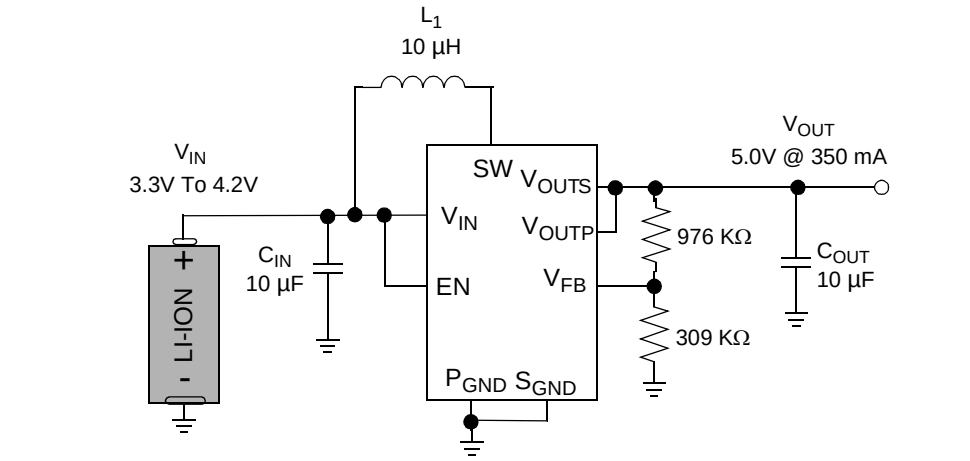

FIGURE 6-2: *USB On-The-Go Powered by Li-Ion.*

NOTES:

© 2010 Microchip Technology Inc.

7.0 PACKAGING INFORMATION

7.1 Package Marking Information (Not to Scale)

6-Lead SOT-23

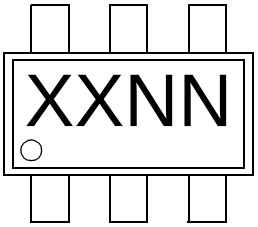

Example

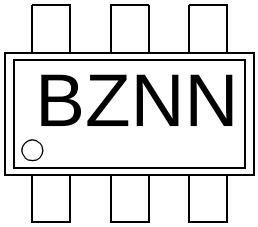

8-Lead DFN

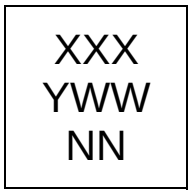

Example

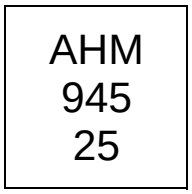

Legend:	XX...X	Customer-specific information
	Y	Year code (last digit of calendar year)
	YY	Year code (last 2 digits of calendar year)
	WW	Week code (week of January 1 is week ‘01’)
	NNN	Alphanumeric traceability code
	(e3)	Pb-free JEDEC designator for Matte Tin (Sn)
	*	This package is Pb-free. The Pb-free JEDEC designator ((e3)) can be found on the outer packaging for this package.

Note: In the event the full Microchip part number cannot be marked on one line, it will be carried over to the next line, thus limiting the number of available characters for customer-specific information.

6-Lead Plastic Small Outline Transistor (CH) [SOT-23]

Note: For the most current package drawings, please see the Microchip Packaging Specification located at http://www.microchip.com/packaging

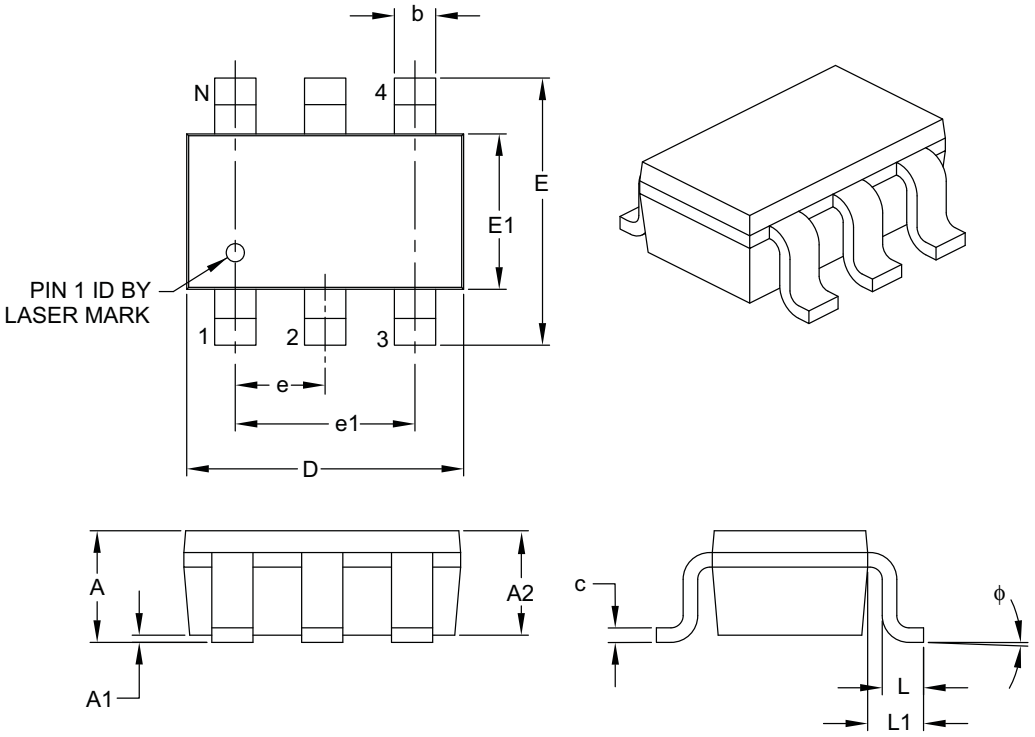

Units		MILLIMETERS		
Dimension Limits		MIN	NOM	MAX
Number of Pins	N		6	
Pitch	e		0.95 BSC	
Outside Lead Pitch	e1		1.90 BSC	
Overall Height	A	0.90	–	1.45
Molded Package Thickness	A2	0.89	–	1.30
Standoff	A1	0.00	–	0.15
Overall Width	E	2.20	–	3.20
Molded Package Width	E1	1.30	–	1.80
Overall Length	D	2.70	–	3.10
Foot Length	L	0.10	–	0.60
Footprint	L1	0.35	–	0.80
Foot Angle	ϕ	0°	–	30°
Lead Thickness	c	0.08	–	0.26
Lead Width	b	0.20	–	0.51

Notes:

1. Dimensions D and E1 do not include mold flash or protrusions. Mold flash or protrusions shall not exceed 0.127 mm per side.
2. Dimensioning and tolerancing per ASME Y14.5M.

BSC: Basic Dimension. Theoretically exact value shown without tolerances.

Microchip Technology Drawing C04-028B

© 2010 Microchip Technology Inc.

6-Lead Plastic Small Outline Transistor (CH) [SOT-23]

Note: For the most current package drawings, please see the Microchip Packaging Specification located at http://www.microchip.com/packaging

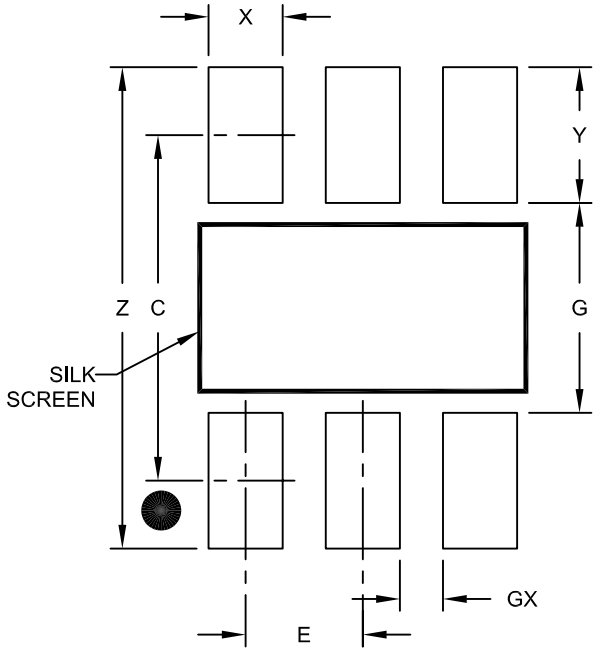

RECOMMENDED LAND PATTERN

Units		MILLIMETERS		
Dimension Limits		MIN	NOM	MAX
Contact Pitch	E	0.95 BSC		
Contact Pad Spacing	C		2.80	
Contact Pad Width (X6)	X			0.60
Contact Pad Length (X6)	Y			1.10
Distance Between Pads	G	1.70		
Distance Between Pads	GX	0.35		
Overall Width	Z			3.90

Notes:

1. Dimensioning and tolerancing per ASME Y14.5M

BSC: Basic Dimension. Theoretically exact value shown without tolerances.

Microchip Technology Drawing No. C04-2028A

8-Lead Plastic Dual Flat, No Lead Package (MC) – 2x3x0.9 mm Body [DFN]

Note: For the most current package drawings, please see the Microchip Packaging Specification located at http://www.microchip.com/packaging

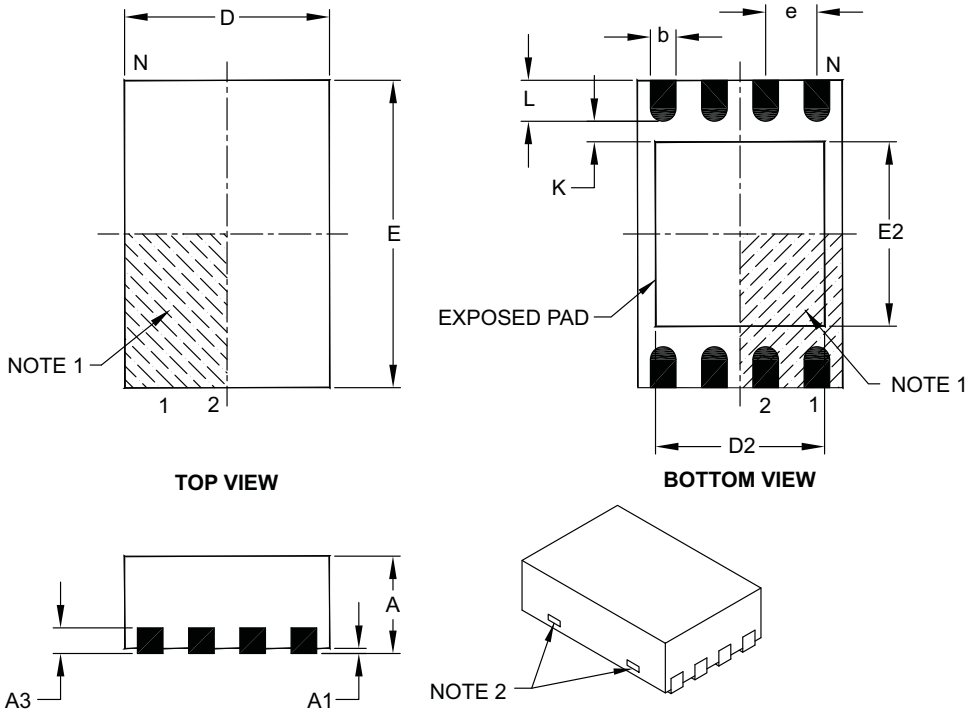

Units		MILLIMETERS		
Dimension Limits		MIN	NOM	MAX
Number of Pins	N		8	
Pitch	e		0.50 BSC	
Overall Height	A	0.80	0.90	1.00
Standoff	A1	0.00	0.02	0.05
Contact Thickness	A3		0.20 REF	
Overall Length	D		2.00 BSC	
Overall Width	E		3.00 BSC	
Exposed Pad Length	D2	1.30	–	1.55
Exposed Pad Width	E2	1.50	–	1.75
Contact Width	b	0.20	0.25	0.30
Contact Length	L	0.30	0.40	0.50
Contact-to-Exposed Pad	K	0.20	–	–

Notes:

1. Pin 1 visual index feature may vary, but must be located within the hatched area.
2. Package may have one or more exposed tie bars at ends.
3. Package is saw singulated.
4. Dimensioning and tolerancing per ASME Y14.5M.

BSC: Basic Dimension. Theoretically exact value shown without tolerances.

REF: Reference Dimension, usually without tolerance, for information purposes only.

Microchip Technology Drawing C04-123C

© 2010 Microchip Technology Inc.

8-Lead Plastic Dual Flat, No Lead Package (MC) – 2x3x0.9 mm Body [DFN]

Note: For the most current package drawings, please see the Microchip Packaging Specification located at http://www.microchip.com/packaging

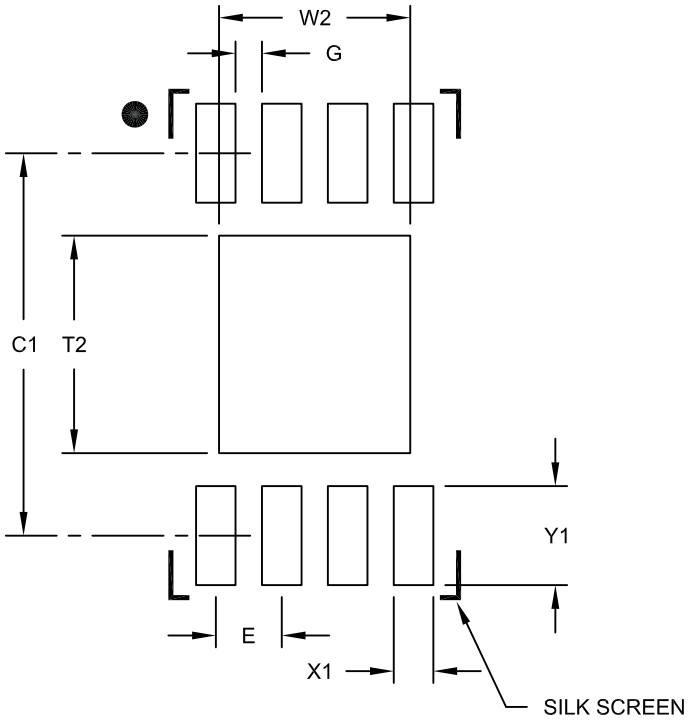

RECOMMENDED LAND PATTERN

Units		MILLIMETERS		
Dimension Limits		MIN	NOM	MAX
Contact Pitch	E		0.50 BSC	
Optional Center Pad Width	W2			1.45
Optional Center Pad Length	T2			1.75
Contact Pad Spacing	C1		2.90	
Contact Pad Width (X8)	X1			0.30
Contact Pad Length (X8)	Y1			0.75
Distance Between Pads	G	0.20		

Notes:

1. Dimensioning and tolerancing per ASME Y14.5M

BSC: Basic Dimension. Theoretically exact value shown without tolerances.

Microchip Technology Drawing No. C04-2123A

NOTES:

© 2010 Microchip Technology Inc.

APPENDIX A: REVISION HISTORY

Revision A (February 2010)

- Original Release of this Document.

NOTES:

© 2010 Microchip Technology Inc.

PRODUCT IDENTIFICATION SYSTEM

To order or obtain information, e.g., on pricing or delivery, refer to the factory or the listed sales office.

PART NO.	X	X	/XX
Device	Tape and Reel	Temperature Range	Package

Device	MCP1640:	0.65V, PWM/PFM True Disconnect, Sync Boost Regulator
	MCP1640T:	0.65V, PWM/PFM True Disconnect, Sync Boost Regulator (Tape and Reel)
	MCP1640B:	0.65V, PWM Only True Disconnect, Sync Boost Regulator
	MCP1640BT:	0.65V, PWM Only True Disconnect, Sync Boost Regulator (Tape and Reel)
	MCP1640C:	0.65V, PWM/PFM Input to Output Bypass, Sync Boost Regulator
	MCP1640CT:	0.65V, PWM/PFM Input to Output Bypass, Sync Boost Regulator (Tape and Reel)
	MCP1640D:	0.65V, PWM Only Input to Output Bypass, Sync Boost Regulator
	MCP1640DT:	0.65V, PWM Only Input to Output Bypass, Sync Boost Regulator (Tape and Reel)
Temperature Range	I =	-40°C to +85°C (Industrial)
Package	CH =	Plastic Small Outline Transistor (SOT-23), 6-lead
	MC =	Plastic Dual Flat, No Lead (2x3 DFN), 8-lead

Examples:

a)	MCP1640-I/MC:	0.65V, Sync Reg., 8LD-DFN pkg.
b)	MCP1640T-I/MC:	Tape and Reel, 0.65V, Sync Reg., 8LD-DFN pkg.
c)	MCP1640B-I/MC:	0.65V, Sync Reg., 8LD-DFN pkg.
d)	MCP1640BT-I/MC:	Tape and Reel, 0.65V, Sync Reg., 8LD-DFN pkg.
e)	MCP1640C-I/MC:	0.65V, Sync Reg., 8LD-DFN pkg.
f)	MCP1640CT-I/MC:	Tape and Reel, 0.65V, Sync Reg., 8LD-DFN pkg.
g)	MCP1640D-I/MC::	0.65V, Sync Reg., 8LD-DFN pkg.
h)	MCP1640DT-I/MC::	Tape and Reel, 0.65V, Sync Reg., 8LD-DFN pkg.
i)	MCP1640T-I/CHY:	Tape and Reel, 0.65V, Sync Reg., 6LD SOT-23 pkg.
j)	MCP1640BT-I/CHY:	Tape and Reel, 0.65V, Sync Reg., 6LD SOT-23 pkg.
k)	MCP1640CT-I/CHY:	Tape and Reel, 0.65V, Sync Reg., 6LD SOT-23 pkg.
l)	MCP1640DT-I/CHY:	Tape and Reel, 0.65V, Sync Reg., 6LD SOT-23 pkg.

NOTES:

© 2010 Microchip Technology Inc.

Note the following details of the code protection feature on Microchip devices:

- Microchip products meet the specification contained in their particular Microchip Data Sheet.
- Microchip believes that its family of products is one of the most secure families of its kind on the market today, when used in the intended manner and under normal conditions.
- There are dishonest and possibly illegal methods used to breach the code protection feature. All of these methods, to our knowledge, require using the Microchip products in a manner outside the operating specifications contained in Microchip's Data Sheets. Most likely, the person doing so is engaged in theft of intellectual property.
- Microchip is willing to work with the customer who is concerned about the integrity of their code.
- Neither Microchip nor any other semiconductor manufacturer can guarantee the security of their code. Code protection does not mean that we are guaranteeing the product as "unbreakable."

Code protection is constantly evolving. We at Microchip are committed to continuously improving the code protection features of our products. Attempts to break Microchip's code protection feature may be a violation of the Digital Millennium Copyright Act. If such acts allow unauthorized access to your software or other copyrighted work, you may have a right to sue for relief under that Act.

Information contained in this publication regarding device applications and the like is provided only for your convenience and may be superseded by updates. It is your responsibility to ensure that your application meets with your specifications. MICROCHIP MAKES NO REPRESENTATIONS OR WARRANTIES OF ANY KIND WHETHER EXPRESS OR IMPLIED, WRITTEN OR ORAL, STATUTORY OR OTHERWISE, RELATED TO THE INFORMATION, INCLUDING BUT NOT LIMITED TO ITS CONDITION, QUALITY, PERFORMANCE, MERCHANTABILITY OR FITNESS FOR PURPOSE**.** Microchip disclaims all liability arising from this information and its use. Use of Microchip devices in life support and/or safety applications is entirely at the buyer's risk, and the buyer agrees to defend, indemnify and hold harmless Microchip from any and all damages, claims, suits, or expenses resulting from such use. No licenses are conveyed, implicitly or otherwise, under any Microchip intellectual property rights.

Trademarks

The Microchip name and logo, the Microchip logo, dsPIC, KEELOQ, KEELOQ logo, MPLAB, PIC, PICmicro, PICSTART, rfPIC and UNI/O are registered trademarks of Microchip Technology Incorporated in the U.S.A. and other countries.

FilterLab, Hampshire, HI-TECH C, Linear Active Thermistor, MXDEV, MXLAB, SEEVAL and The Embedded Control Solutions Company are registered trademarks of Microchip Technology Incorporated in the U.S.A.

Analog-for-the-Digital Age, Application Maestro, CodeGuard, dsPICDEM, dsPICDEM.net, dsPICworks, dsSPEAK, ECAN, ECONOMONITOR, FanSense, HI-TIDE, In-Circuit Serial Programming, ICSP, Mindi, MiWi, MPASM, MPLAB Certified logo, MPLIB, MPLINK, mTouch, Octopus, Omniscient Code Generation, PICC, PICC-18, PICDEM, PICDEM.net, PICkit, PICtail, PIC^{32} logo, REAL ICE, rfLAB, Select Mode, Total Endurance, TSHARC, UniWinDriver, WiperLock and ZENA are trademarks of Microchip Technology Incorporated in the U.S.A. and other countries.

SQTP is a service mark of Microchip Technology Incorporated in the U.S.A.

All other trademarks mentioned herein are property of their respective companies.

© 2010, Microchip Technology Incorporated, Printed in the U.S.A., All Rights Reserved.

Printed on recycled paper.

ISBN: 978-1-60932-019-5

QUALITY MANAGEMENT SYSTEM
CERTIFIED BY DNV
ISO/TS 16949:2002

Microchip received ISO/TS-16949:2002 certification for its worldwide headquarters, design and wafer fabrication facilities in Chandler and Tempe, Arizona; Gresham, Oregon and design centers in California and India. The Company's quality system processes and procedures are for its PIC® MCUs and dsPIC® DSCs, KEELOQ® code hopping devices, Serial EEPROMs, microperipherals, nonvolatile memory and analog products. In addition, Microchip's quality system for the design and manufacture of development systems is ISO 9001:2000 certified.

WORLDWIDE SALES AND SERVICE

AMERICAS

Corporate Office
2355 West Chandler Blvd.
Chandler, AZ 85224-6199
Tel: 480-792-7200
Fax: 480-792-7277
Technical Support:
http://support.microchip.com
Web Address:
www.microchip.com

Atlanta
Duluth, GA
Tel: 678-957-9614
Fax: 678-957-1455

Boston
Westborough, MA
Tel: 774-760-0087
Fax: 774-760-0088

Chicago
Itasca, IL
Tel: 630-285-0071
Fax: 630-285-0075

Cleveland
Independence, OH
Tel: 216-447-0464
Fax: 216-447-0643

Dallas
Addison, TX
Tel: 972-818-7423
Fax: 972-818-2924

Detroit
Farmington Hills, MI
Tel: 248-538-2250
Fax: 248-538-2260

Kokomo
Kokomo, IN
Tel: 765-864-8360
Fax: 765-864-8387

Los Angeles
Mission Viejo, CA
Tel: 949-462-9523
Fax: 949-462-9608

Santa Clara
Santa Clara, CA
Tel: 408-961-6444
Fax: 408-961-6445

Toronto
Mississauga, Ontario,
Canada
Tel: 905-673-0699
Fax: 905-673-6509

ASIA/PACIFIC

Asia Pacific Office
Suites 3707-14, 37th Floor
Tower 6, The Gateway
Harbour City, Kowloon
Hong Kong
Tel: 852-2401-1200
Fax: 852-2401-3431

Australia - Sydney
Tel: 61-2-9868-6733
Fax: 61-2-9868-6755

China - Beijing
Tel: 86-10-8528-2100
Fax: 86-10-8528-2104

China - Chengdu
Tel: 86-28-8665-5511
Fax: 86-28-8665-7889

China - Chongqing
Tel: 86-23-8980-9588
Fax: 86-23-8980-9500

China - Hong Kong SAR
Tel: 852-2401-1200
Fax: 852-2401-3431

China - Nanjing
Tel: 86-25-8473-2460
Fax: 86-25-8473-2470

China - Qingdao
Tel: 86-532-8502-7355
Fax: 86-532-8502-7205

China - Shanghai
Tel: 86-21-5407-5533
Fax: 86-21-5407-5066

China - Shenyang
Tel: 86-24-2334-2829
Fax: 86-24-2334-2393

China - Shenzhen
Tel: 86-755-8203-2660
Fax: 86-755-8203-1760

China - Wuhan
Tel: 86-27-5980-5300
Fax: 86-27-5980-5118

China - Xian
Tel: 86-29-8833-7252
Fax: 86-29-8833-7256

China - Xiamen
Tel: 86-592-2388138
Fax: 86-592-2388130

China - Zhuhai
Tel: 86-756-3210040
Fax: 86-756-3210049

ASIA/PACIFIC

India - Bangalore
Tel: 91-80-3090-4444
Fax: 91-80-3090-4123

India - New Delhi
Tel: 91-11-4160-8631
Fax: 91-11-4160-8632

India - Pune
Tel: 91-20-2566-1512
Fax: 91-20-2566-1513

Japan - Yokohama
Tel: 81-45-471- 6166
Fax: 81-45-471-6122

Korea - Daegu
Tel: 82-53-744-4301
Fax: 82-53-744-4302

Korea - Seoul
Tel: 82-2-554-7200
Fax: 82-2-558-5932 or
82-2-558-5934

Malaysia - Kuala Lumpur
Tel: 60-3-6201-9857
Fax: 60-3-6201-9859

Malaysia - Penang
Tel: 60-4-227-8870
Fax: 60-4-227-4068

Philippines - Manila
Tel: 63-2-634-9065
Fax: 63-2-634-9069

Singapore
Tel: 65-6334-8870
Fax: 65-6334-8850

Taiwan - Hsin Chu
Tel: 886-3-6578-300
Fax: 886-3-6578-370

Taiwan - Kaohsiung
Tel: 886-7-536-4818
Fax: 886-7-536-4803

Taiwan - Taipei
Tel: 886-2-2500-6610
Fax: 886-2-2508-0102

Thailand - Bangkok
Tel: 66-2-694-1351
Fax: 66-2-694-1350

EUROPE

Austria - Wels
Tel: 43-7242-2244-39
Fax: 43-7242-2244-393

Denmark - Copenhagen
Tel: 45-4450-2828
Fax: 45-4485-2829

France - Paris
Tel: 33-1-69-53-63-20
Fax: 33-1-69-30-90-79

Germany - Munich
Tel: 49-89-627-144-0
Fax: 49-89-627-144-44

Italy - Milan
Tel: 39-0331-742611
Fax: 39-0331-466781

Netherlands - Drunen
Tel: 31-416-690399
Fax: 31-416-690340

Spain - Madrid
Tel: 34-91-708-08-90
Fax: 34-91-708-08-91

UK - Wokingham
Tel: 44-118-921-5869
Fax: 44-118-921-5820

01/05/10

© 2010 Microchip Technology Inc.