Quad 2-Channel Multiplexer

MC74VHC157

The MC74VHC157 is an advanced high speed CMOS quad 2–channel multiplexer fabricated with silicon gate CMOS technology. It achieves high speed operation similar to equivalent Bipolar Schottky TTL while maintaining CMOS low power dissipation.

It consists of four 2–input digital multiplexers with common select (S) and enable (E) inputs. When E is held High, selection of data is inhibited and all the outputs go Low.

The select decoding determines whether the A or B inputs get routed to the corresponding Y outputs.

The internal circuit is composed of three stages, including a buffer output which provides high noise immunity and stable output. The inputs tolerate voltages up to 7V, allowing the interface of 5V systems to 3V systems.

- High Speed: t_{PD} = 4.1ns (Typ) at V_{CC} = 5V
- Low Power Dissipation: I_{CC} = 4μA (Max) at T_A = 25°C
- High Noise Immunity: $V_{NIH} = V_{NIL}$ = 28% V_{CC}
- Power Down Protection Provided on Inputs
- Balanced Propagation Delays
- Designed for 2V to 5.5V Operating Range
- Low Noise: V_{OLP} = 0.8V (Max)
- Pin and Function Compatible with Other Standard Logic Families
- Latchup Performance Exceeds 300mA
- ESD Performance: HBM > 2000V; Machine Model > 200V
- Chip Complexity: 82 FETs or 20 Equivalent Gates

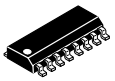

D SUFFIX
16–LEAD SOIC PACKAGE
CASE 751B–05



DT SUFFIX
16–LEAD TSSOP PACKAGE
CASE 948F–01

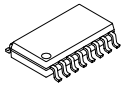

M SUFFIX
16–LEAD SOIC EIAJ PACKAGE
CASE 966–01

ORDERING INFORMATION

MC74VHCXXXD	SOIC
MC74VHCXXXDT	TSSOP
MC74VHCXXXM	SOIC EIAJ

EXPANDED LOGIC DIAGRAM

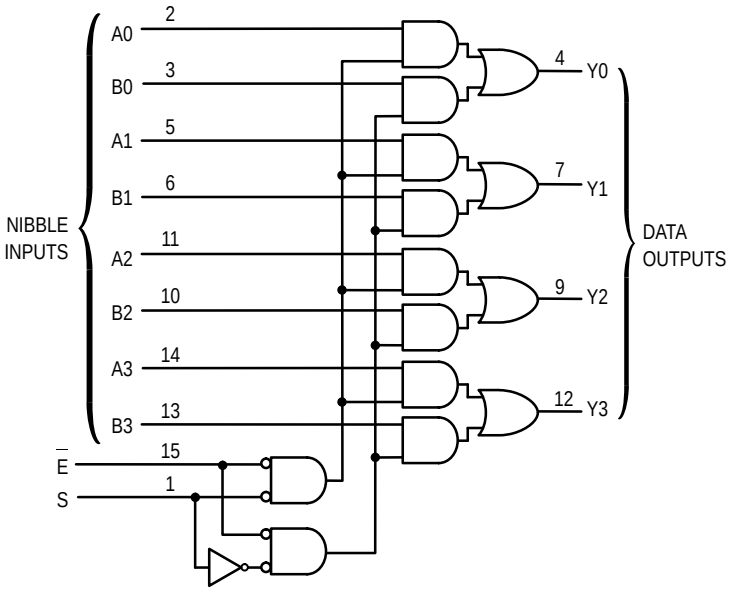

PIN ASSIGNMENT

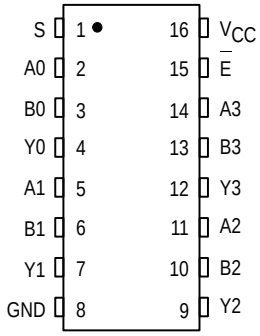

FUNCTION TABLE

Inputs		Outputs
E	**S**	**Y0 – Y3**
H	X	L
L	L	A0 – A3
L	H	B0 – B3

A0 – A3, B0 – B3 = the levels of the respective Data–Word Inputs.

© Motorola, Inc. 1997

MAXIMUM RATINGS*

Symbol	Parameter	Value	Unit
V_{CC}	DC Supply Voltage	– 0.5 to + 7.0	V
V_{in}	DC Input Voltage	– 0.5 to + 7.0	V
V_{out}	DC Output Voltage	– 0.5 to V_{CC} + 0.5	V
I_{IK}	Input Diode Current	– 20	mA
I_{OK}	Output Diode Current	± 20	mA
I_{out}	DC Output Current, per Pin	± 25	mA
I_{CC}	DC Supply Current, V_{CC} and GND Pins	± 50	mA
P_D	Power Dissipation in Still Air, SOIC Packages† TSSOP Package†	500 450	mW
T_{stg}	Storage Temperature	– 65 to + 150	°C

* Absolute maximum continuous ratings are those values beyond which damage to the device may occur. Exposure to these conditions or conditions beyond those indicated may adversely affect device reliability. Functional operation under absolute–maximum–rated conditions is not implied.

†Derating — SOIC Packages: – 7 mW/°C from 65° to 125°C
TSSOP Package: – 6.1 mW/°C from 65° to 125°C

This device contains protection circuitry to guard against damage due to high static voltages or electric fields. However, precautions must be taken to avoid applications of any voltage higher than maximum rated voltages to this high–impedance circuit. For proper operation, V_{in} and V_{out} should be constrained to the range GND ≤ (V_{in} or V_{out}) ≤ V_{CC}.

Unused inputs must always be tied to an appropriate logic voltage level (e.g., either GND or V_{CC}). Unused outputs must be left open.

RECOMMENDED OPERATING CONDITIONS

Symbol	Parameter		Min	Max	Unit
V_{CC}	DC Supply Voltage		2.0	5.5	V
V_{in}	DC Input Voltage		0	5.5	V
V_{out}	DC Output Voltage		0	V_{CC}	V
T_A	Operating Temperature		– 40	+ 85	°C
t_r, t_f	Input Rise and Fall Time	V_{CC} = 3.3V V_{CC} = 5.0V	0 0	100 20	ns/V

DC ELECTRICAL CHARACTERISTICS

Symbol	Parameter	Test Conditions	V_{CC} V	T_A = 25°C			T_A = – 40 to 85°C		Unit
				Min	Typ	Max	Min	Max	
V_{IH}	Minimum High–Level Input Voltage		2.0 3.0 to 5.5	1.50 V_{CC} x 0.7			1.50 V_{CC} x 0.7		V
V_{IL}	Maximum Low–Level Input Voltage		2.0 3.0 to 5.5			0.50 V_{CC} x 0.3		0.50 V_{CC} x 0.3	V
V_{OH}	Minimum High–Level Output Voltage	V_{in} = V_{IH} or V_{IL} I_{OH} = – 50μA	2.0 3.0 4.5	1.9 2.9 4.4	2.0 3.0 4.5		1.9 2.9 4.4		V
		V_{in} = V_{IH} or V_{IL} I_{OH} = – 4mA I_{OH} = – 8mA	3.0 4.5	2.58 3.94			2.48 3.80		
V_{OL}	Maximum Low–Level Output Voltage	V_{in} = V_{IH} or V_{IL} I_{OL} = 50μA	2.0 3.0 4.5		0.0 0.0 0.0	0.1 0.1 0.1		0.1 0.1 0.1	V
		V_{in} = V_{IH} or V_{IL} I_{OL} = 4mA I_{OL} = 8mA	3.0 4.5			0.36 0.36		0.44 0.44	

DC ELECTRICAL CHARACTERISTICS

Symbol	Parameter	Test Conditions	V_{CC} V	T_A = 25°C			T_A = – 40 to 85°C		Unit
				Min	Typ	Max	Min	Max	
I_{in}	Maximum Input Leakage Current	V_{in} = 5.5 V or GND	0 to 5.5			± 0.1		± 1.0	μA
I_{CC}	Maximum Quiescent Supply Current	V_{in} = V_{CC} or GND	5.5			4.0		40.0	μA

AC ELECTRICAL CHARACTERISTICS (Input $t_r = t_f$ = 3.0ns)

Symbol	Parameter	Test Conditions		T_A = 25°C			T_A = – 40 to 85°C		Unit
				Min	Typ	Max	Min	Max	
t_{PLH}, t_{PHL}	Maximum Propagation Delay, A or B to Y	V_{CC} = 3.3 ± 0.3 V	C_L = 15pF C_L = 50pF		6.2 8.7	9.7 13.2	1.0 1.0	11.5 15.0	ns
		V_{CC} = 5.0 ± 0.5 V	C_L = 15pF C_L = 50pF		4.1 5.6	6.4 8.4	1.0 1.0	7.5 9.5	
t_{PLH}, t_{PHL}	Maximum Propagation Delay, S to Y	V_{CC} = 3.3 ± 0.3 V	C_L = 15pF C_L = 50pF		8.4 10.9	13.2 16.7	1.0 1.0	15.5 19.0	ns
		V_{CC} = 5.0 ± 0.5 V	C_L = 15pF C_L = 50pF		5.3 6.8	8.1 10.1	1.0 1.0	9.5 11.5	
t_{PLH}, t_{PHL}	Maximum Propagation Delay, E to Y	V_{CC} = 3.3 ± 0.3 V	C_L = 15pF C_L = 50pF		8.7 11.2	13.6 17.1	1.0 1.0	16.0 19.5	ns
		V_{CC} = 5.0 ± 0.5 V	C_L = 15pF C_L = 50pF		5.6 7.1	8.6 10.6	1.0 1.0	10.0 12.0	
C_{in}	Maximum Input Capacitance				4	10		10	pF

		Typical @ 25°C, V_{CC} = 5.0V	
C_{PD}	Power Dissipation Capacitance (Note 1.)	20	pF

1. C_{PD} is defined as the value of the internal equivalent capacitance which is calculated from the operating current consumption without load. Average operating current can be obtained by the equation: $I_{CC(OPR)} = C_{PD} \bullet V_{CC} \bullet f_{in} + I_{CC}$. C_{PD} is used to determine the no–load dynamic power consumption; $P_D = C_{PD} \bullet V_{CC}^2 \bullet f_{in} + I_{CC} \bullet V_{CC}$.

NOISE CHARACTERISTICS (Input $t_r = t_f$ = 3.0ns, C_L = 50pF, V_{CC} = 5.0V)

Symbol	Characteristic	T_A = 25°C		Unit
		Typ	Max	
V_{OLP}	Quiet Output Maximum Dynamic V_{OL}	0.3	0.8	V
V_{OLV}	Quiet Output Minimum Dynamic V_{OL}	– 0.3	– 0.8	V
V_{IHD}	Minimum High Level Dynamic Input Voltage		3.5	V
V_{ILD}	Maximum Low Level Dynamic Input Voltage		1.5	V

SWITCHING WAVEFORMS

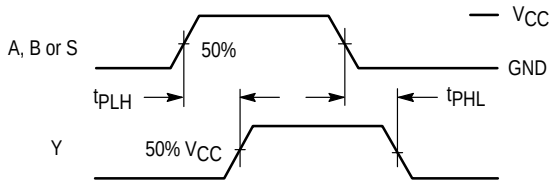

Figure 1. Switching Waveform

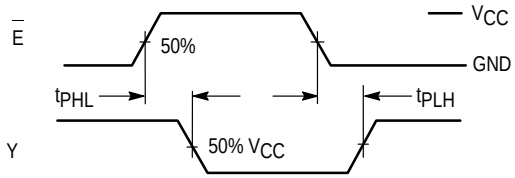

Figure 2. Inverting Switching

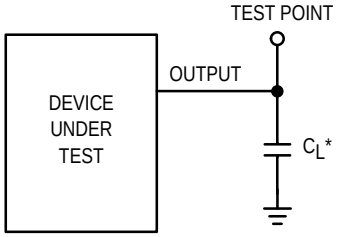

* Includes all probe and jig capacitance

Figure 3. Test Circuit

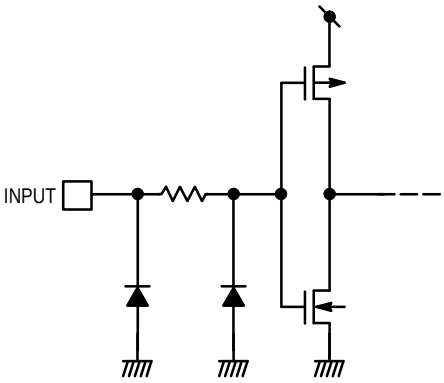

Figure 4. Input Equivalent Circuit

OUTLINE DIMENSIONS

D SUFFIX
PLASTIC SOIC PACKAGE
CASE 751B–05
ISSUE J

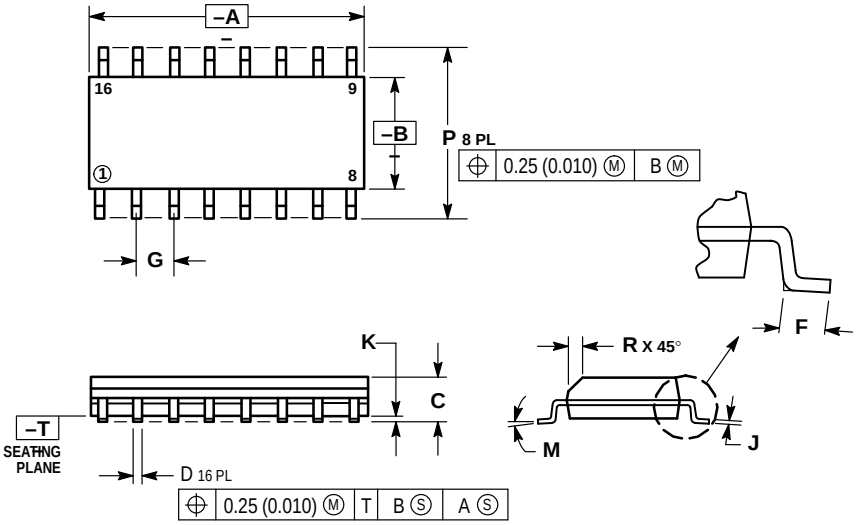

NOTES:
1. DIMENSIONING AND TOLERANCING PER ANSI Y14.5M, 1982.
2. CONTROLLING DIMENSION: MILLIMETER.
3. DIMENSIONS A AND B DO NOT INCLUDE MOLD PROTRUSION.
4. MAXIMUM MOLD PROTRUSION 0.15 (0.006) PER SIDE.
5. DIMENSION D DOES NOT INCLUDE DAMBAR PROTRUSION. ALLOWABLE DAMBAR PROTRUSION SHALL BE 0.127 (0.005) TOTAL IN EXCESS OF THE D DIMENSION AT MAXIMUM MATERIAL CONDITION.

	MILLIMETERS		INCHES	
DIM	MIN	MAX	MIN	MAX
A	9.80	10.00	0.386	0.393
B	3.80	4.00	0.150	0.157
C	1.35	1.75	0.054	0.068
D	0.35	0.49	0.014	0.019
F	0.40	1.25	0.016	0.049
G	1.27 BSC		0.050 BSC	
J	0.19	0.25	0.008	0.009
K	0.10	0.25	0.004	0.009
M	0°	7°	0°	7°
P	5.80	6.20	0.229	0.244
R	0.25	0.50	0.010	0.019

DT SUFFIX
PLASTIC TSSOP PACKAGE
CASE 948F–01
ISSUE O

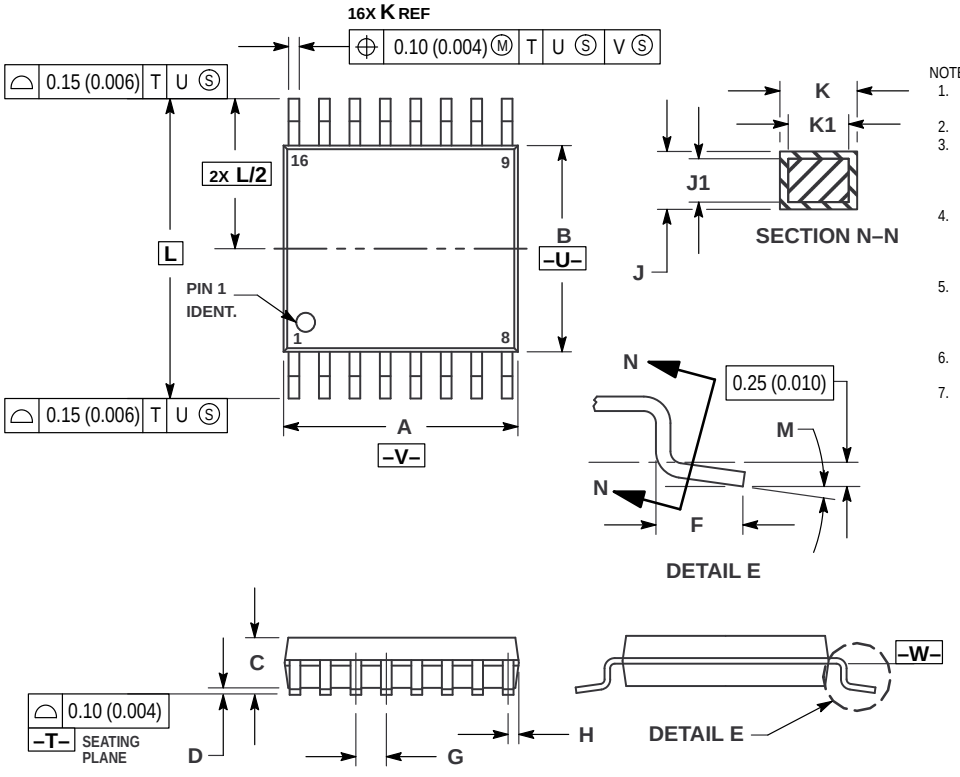

NOTES:
1. DIMENSIONING AND TOLERANCING PER ANSI Y14.5M, 1982.
2. CONTROLLING DIMENSION: MILLIMETER.
3. DIMENSION A DOES NOT INCLUDE MOLD FLASH. PROTRUSIONS OR GATE BURRS. MOLD FLASH OR GATE BURRS SHALL NOT EXCEED 0.15 (0.006) PER SIDE.
4. DIMENSION B DOES NOT INCLUDE INTERLEAD FLASH OR PROTRUSION. INTERLEAD FLASH OR PROTRUSION SHALL NOT EXCEED 0.25 (0.010) PER SIDE.
5. DIMENSION K DOES NOT INCLUDE DAMBAR PROTRUSION. ALLOWABLE DAMBAR PROTRUSION SHALL BE 0.08 (0.003) TOTAL IN EXCESS OF THE K DIMENSION AT MAXIMUM MATERIAL CONDITION.
6. TERMINAL NUMBERS ARE SHOWN FOR REFERENCE ONLY.
7. DIMENSION A AND B ARE TO BE DETERMINED AT DATUM PLANE –W–.

	MILLIMETERS		INCHES	
DIM	MIN	MAX	MIN	MAX
A	4.90	5.10	0.193	0.200
B	4.30	4.50	0.169	0.177
C	—	1.20	—	0.047
D	0.05	0.15	0.002	0.006
F	0.50	0.75	0.020	0.030
G	0.65 BSC		0.026 BSC	
H	0.18	0.28	0.007	0.011
J	0.09	0.20	0.004	0.008
J1	0.09	0.16	0.004	0.006
K	0.19	0.30	0.007	0.012
K1	0.19	0.25	0.007	0.010
L	6.40 BSC		0.252 BSC	
M	0 °	8 °	0 °	8 °

OUTLINE DIMENSIONS

M SUFFIX
PLASTIC SOIC EIAJ PACKAGE
CASE 966–01
ISSUE O

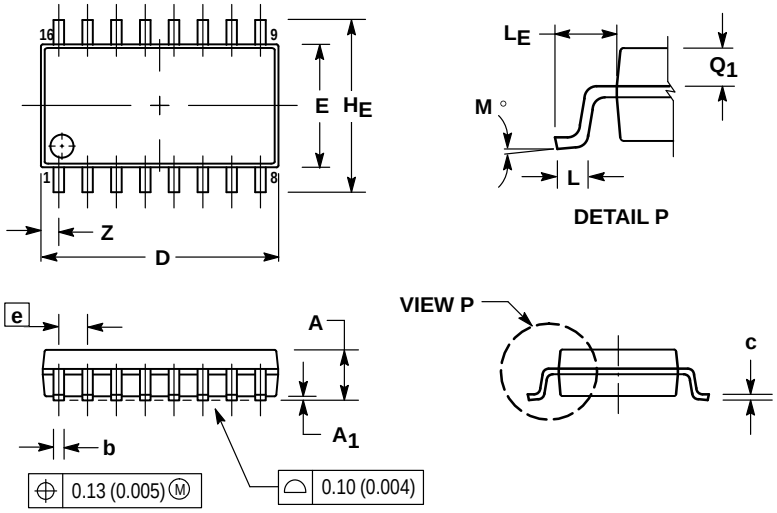

NOTES:
1. DIMENSIONING AND TOLERANCING PER ANSI Y14.5M, 1982.
2. CONTROLLING DIMENSION: MILLIMETER.
3. DIMENSIONS D AND E DO NOT INCLUDE MOLD FLASH OR PROTRUSIONS AND ARE MEASURED AT THE PARTING LINE. MOLD FLASH OR PROTRUSIONS SHALL NOT EXCEED 0.15 (0.006) PER SIDE.
4. TERMINAL NUMBERS ARE SHOWN FOR REFERENCE ONLY.
5. THE LEAD WIDTH DIMENSION (b) DOES NOT INCLUDE DAMBAR PROTRUSION. ALLOWABLE DAMBAR PROTRUSION SHALL BE 0.08 (0.003) TOTAL IN EXCESS OF THE LEAD WIDTH DIMENSION AT MAXIMUM MATERIAL CONDITION. DAMBAR CANNOT BE LOCATED ON THE LOWER RADIUS OR THE FOOT. MINIMUM SPACE BETWEEN PROTRUSIONS AND ADJACENT LEAD TO BE 0.46 (0.018).

	MILLIMETERS		INCHES	
DIM	MIN	MAX	MIN	MAX
A	—	2.05	—	0.081
A_1	0.05	0.20	0.002	0.008
b	0.35	0.50	0.014	0.020
c	0.18	0.27	0.007	0.011
D	9.90	10.50	0.390	0.413
E	5.10	5.45	0.201	0.215
e	1.27 BSC		0.050 BSC	
H_E	7.40	8.20	0.291	0.323
L	0.50	0.85	0.020	0.033
L_E	1.10	1.50	0.043	0.059
M	0 °	10 °	0 °	10 °
Q_1	0.70	0.90	0.028	0.035
Z	—	0.78	—	0.031

Motorola reserves the right to make changes without further notice to any products herein. Motorola makes no warranty, representation or guarantee regarding the suitability of its products for any particular purpose, nor does Motorola assume any liability arising out of the application or use of any product or circuit, and specifically disclaims any and all liability, including without limitation consequential or incidental damages. “Typical” parameters which may be provided in Motorola data sheets and/or specifications can and do vary in different applications and actual performance may vary over time. All operating parameters, including “Typicals” must be validated for each customer application by customer’s technical experts. Motorola does not convey any license under its patent rights nor the rights of others. Motorola products are not designed, intended, or authorized for use as components in systems intended for surgical implant into the body, or other applications intended to support or sustain life, or for any other application in which the failure of the Motorola product could create a situation where personal injury or death may occur. Should Buyer purchase or use Motorola products for any such unintended or unauthorized application, Buyer shall indemnify and hold Motorola and its officers, employees, subsidiaries, affiliates, and distributors harmless against all claims, costs, damages, and expenses, and reasonable attorney fees arising out of, directly or indirectly, any claim of personal injury or death associated with such unintended or unauthorized use, even if such claim alleges that Motorola was negligent regarding the design or manufacture of the part. Motorola and Ⓜ are registered trademarks of Motorola, Inc. Motorola, Inc. is an Equal Opportunity/Affirmative Action Employer.

Mfax is a trademark of Motorola, Inc.

How to reach us:
USA / EUROPE / Locations Not Listed: Motorola Literature Distribution;
P.O. Box 5405, Denver, Colorado 80217. 303–675–2140 or 1–800–441–2447

Mfax™: RMFAX0@email.sps.mot.com – TOUCHTONE 602–244–6609
– US & Canada ONLY 1–800–774–1848

INTERNET: http://motorola.com/sps

JAPAN: Nippon Motorola Ltd.: SPD, Strategic Planning Office, 4–32–1, Nishi–Gotanda, Shinagawa–ku, Tokyo 141, Japan. 81–3–5487–8488

ASIA / PACIFIC: Motorola Semiconductors H.K. Ltd.; 8B Tai Ping Industrial Park, 51 Ting Kok Road, Tai Po, N.T., Hong Kong. 852–26629298