MC4558V

Dual Wide Bandwidth Operational Amplifiers

The MC4558V combine all the outstanding features of the MC1458 and, in addition offer three times the unity gain bandwidth of the industry standard.

- 2.0 MHz Unity Gain Bandwidth Guaranteed
- Internally Compensated
- Short Circuit Protection
- Gain and Phase Match between Amplifiers
- Low Power Consumption

MAXIMUM RATINGS (T_A = +25°C, unless otherwise noted.)

Rating	Symbol	Value	Unit
Power Supply Voltage	V_{CC} V_{EE}	+18 –18	Vdc
Input Differential Voltage	V_{ID}	±30	V
Input Common Mode Voltage (Note 1.)	V_{ICM}	±15	V
Output Short Circuit Duration (Note 2.)	t_{SC}	Continuous	
Ambient Temperature Range	T_A	–40 to +85	°C
Storage Temperature Range	T_{stg}	–55 to +125	°C
Junction Temperature	T_J	150	°C

1. For supply voltages less than ±15 V, the absolute maximum input voltage is equal to the supply voltage.
2. Short circuit may be to ground or either supply.

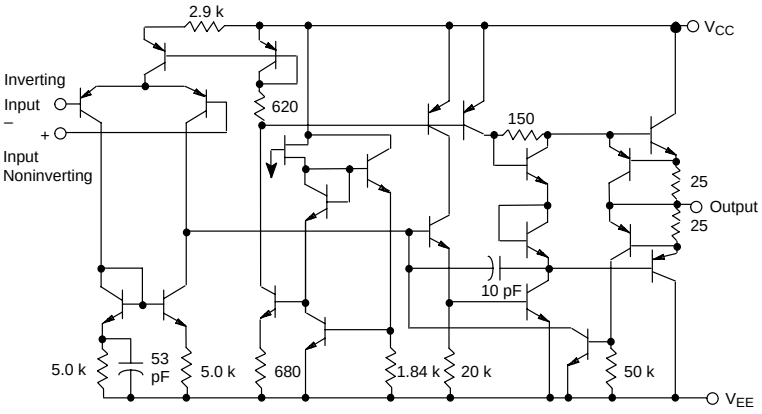

Figure 1. Representative Schematic Diagram
(1/2 of Circuit Shown)

ON Semiconductor™

http://onsemi.com

MARKING DIAGRAM



SO–8
D SUFFIX
CASE 751

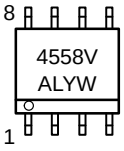

A = Assembly Location
L = Wafer Lot
Y = Year
W = Work Week

PIN CONNECTIONS

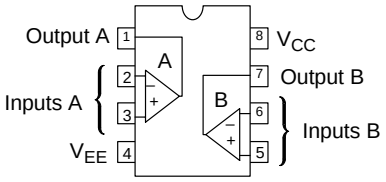

(Top View)

ORDERING INFORMATION

Device	Package	Shipping
MC4558VD	SO–8	98 Units/Rail
MC4558VDR2	SO–8	2500 Tape & Reel

© Semiconductor Components Industries, LLC, 2000

FREQUENCY CHARACTERISTICS (V_{CC} = +15 V, V_{EE} = –15 V, T_A = 25°C)

Characteristic	Symbol	Min	Typ	Max	Unit
Unity Gain Bandwidth	BW	2.0	2.8	–	MHz

ELECTRICAL CHARACTERISTICS (V_{CC} = 15 V, V_{EE} = –15 V, T_A = 25°C, unless otherwise noted.)

Input Offset Voltage ($R_S \le 10$ kΩ)	V_{IO}	–	2.0	6.0	mV
Input Offset Current	I_{IO}	–	20	200	nA
Input Bias Current (Note 1.)	I_{IB}	–	80	500	nA
Input Resistance	r_i	0.3	2.0	–	MΩ
Input Capacitance	C_i	–	1.4	–	pF
Common Mode Input Voltage Range	V_{ICR}	±12	±13	–	V
Large Signal Voltage Gain (V_O = ±10 V, R_L = 2.0 kΩ)	A_{VOL}	20	200	–	V/mV
Output Resistance	r_o	–	75	–	Ω
Common Mode Rejection ($R_S \le 10$ kΩ)	CMR	70	90	–	dB
Supply Voltage Rejection Ratio ($R_S \le 10$ kΩ)	PSRR	–	30	150	μV/V
Output Voltage Swing	V_O				V
($R_L \ge 10$ kΩ)		±12	±14	–	
($R_L \ge 2.0$ kΩ)		±10	±13	–	
Output Short Circuit Current	I_{SC}	10	20	40	mA
Supply Currents (Both Amplifiers)	I_D	–	2.3	5.6	mA
Power Consumption (Both Amplifiers)	P_C	–	70	170	mW
Transient Response (Unity Gain)					
(V_I = 20 mV, $R_L \ge 2.0$ kΩ, $C_L \le 100$ pF) Rise Time	t_{TLH}	–	0.3	–	μs
(V_I = 20 mV, $R_L \ge 2.0$ kΩ, $C_L \le 100$ pF) Overshoot	os	–	15	–	%
(V_I = 10 V, $R_L \ge 2.0$ kΩ, $C_L \le 100$ pF) Slew Rate	SR	1.0	1.6	–	V/μs

ELECTRICAL CHARACTERISTICS (V_{CC} = +15 V, V_{EE} = –15 V, T_A = T_{high} to T_{low}, unless otherwise noted. See Note 2.)

Input Offset Voltage ($R_S \le 10$ kΩ)	V_{IO}	–	–	7.5	mV
Input Offset Current	I_{IO}				nA
(T_A = T_{high})		–	–	–	
(T_A = T_{low})		–	–	–	
(T_A = –40° to +85°C)		–	–	300	
Input Bias Current	I_{IB}				nA
(T_A = T_{high})		–	–	–	
(T_A = T_{low})		–	–	–	
(T_A = –40° to +85°C)		–	–	800	
Common Mode Input Voltage Range	V_{ICR}	–	–	–	V
Large Signal Voltage Gain (V_O = ±10 V, R_L = 2.0 kΩ)	A_{VOL}	15	–	–	V/mV
Common Mode Rejection ($R_S \le 10$ kΩ)	CMR	–	–	–	dB
Supply Voltage Rejection Ratio ($R_S \le 10$ kΩ)	PSRR	–	–	–	μV/V
Output Voltage Swing	V_O				V
($R_L \ge 10$ kΩ)		±12	±14	–	
($R_L \ge 2.0$ kΩ)		±10	±13	–	
Supply Currents (Both Amplifiers)	I_D				mA
(T_A = T_{high})		–	–	5.0	
(T_A = T_{low})		–	–	6.7	
Power Consumption (Both Amplifiers)	P_C				mW
(T_A = T_{high})		–	–	150	
(T_A = T_{low})		–	–	200	

1. I_{IB} is out of the amplifier due to PNP input transistors.
2. T_{high} = +85°C, T_{low} = –40°C.

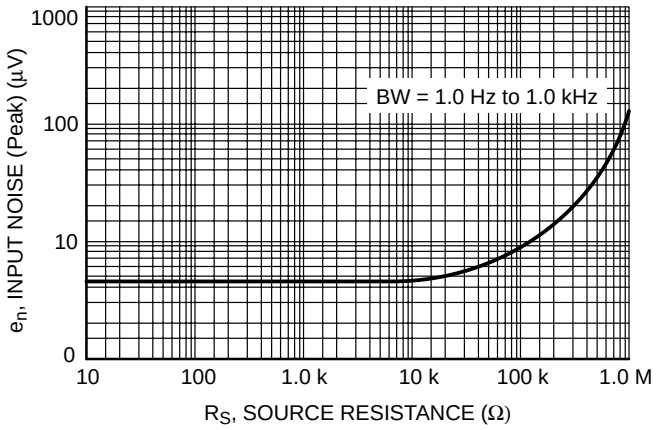

Figure 2. Burst Noise vs. Source Resistance

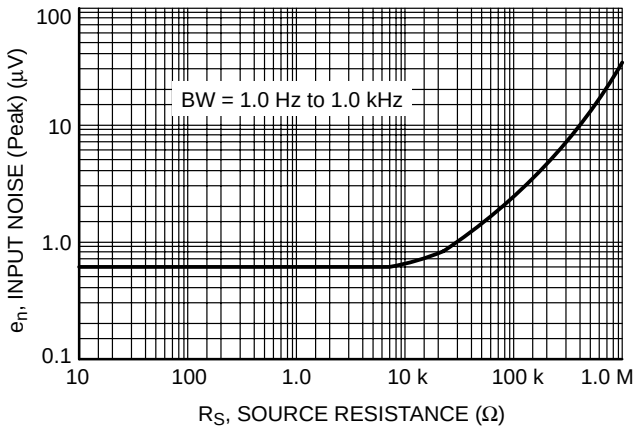

Figure 3. RMS Noise vs. Source Resistance

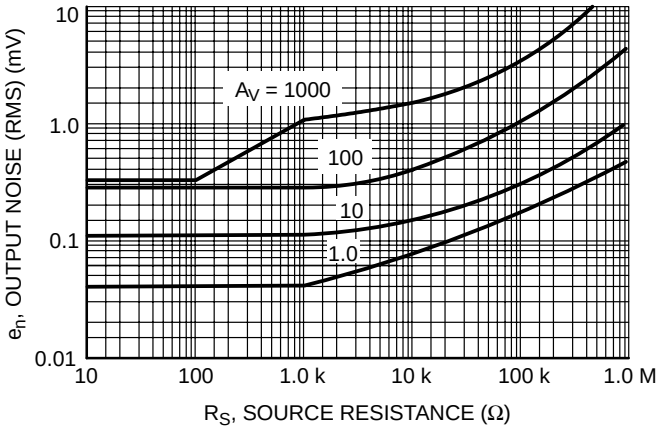

Figure 4. Output Noise vs. Source Resistance

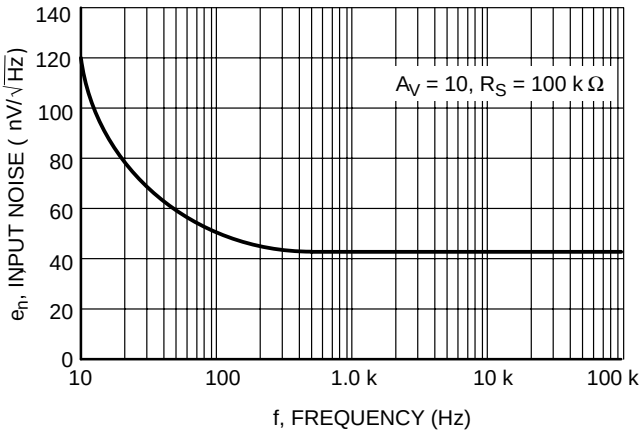

Figure 5. Spectral Noise Density

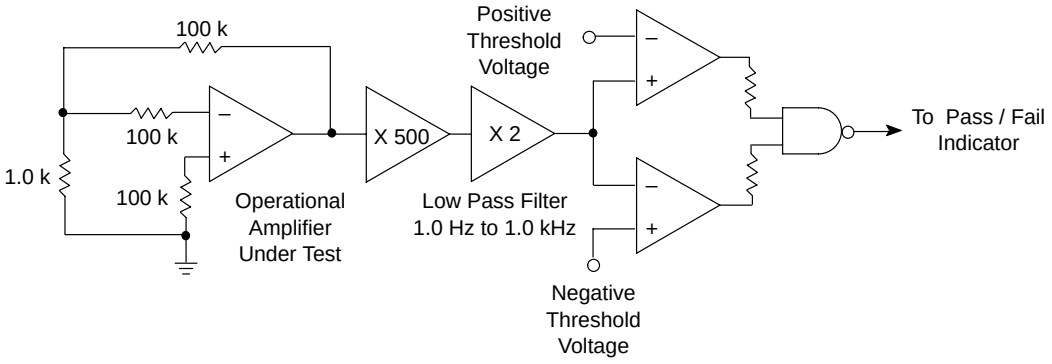

Unlike conventional peak reading or RMS meters, this system was especially designed to provide the quick response time essential to burst (popcorn) noise testing.

The test time employed is 10 sec and the 20 μV peak limit refers to the operational amplifier input thus eliminating errors in the closed loop gain factor of the operational amplifier.

Figure 6. Burst Noise Test Circuit

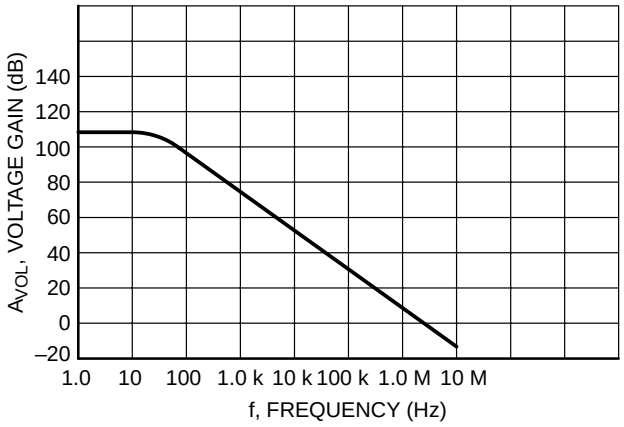

Figure 7. Open Loop Frequency Response

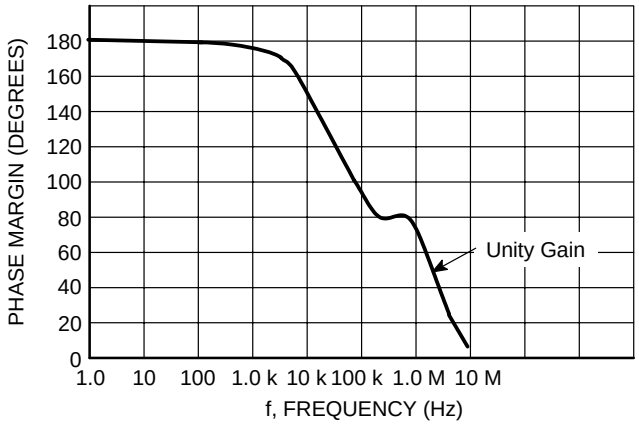

Figure 8. Phase Margin versus Frequency

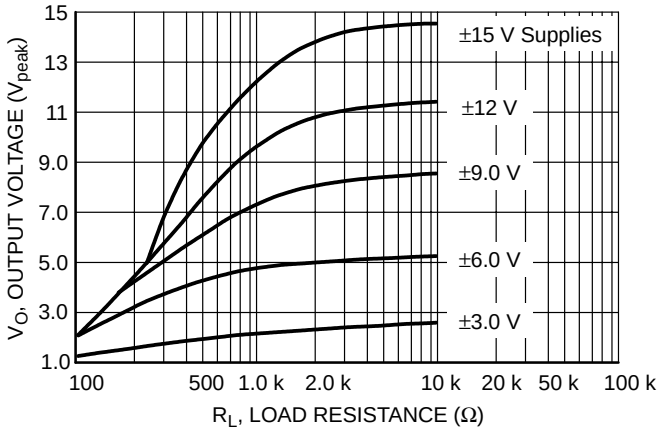

Figure 9. Positive Output Voltage Swing versus Load Resistance

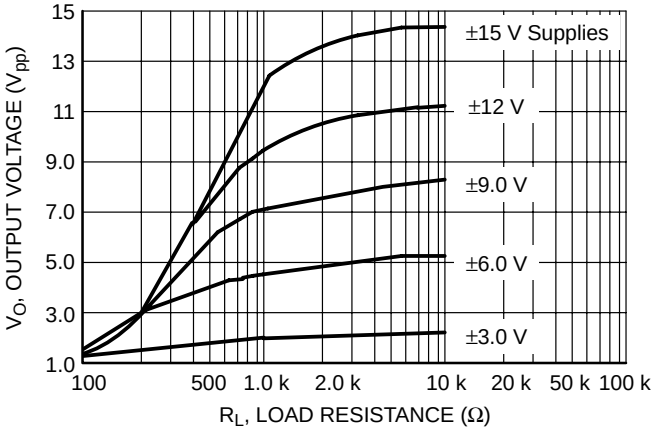

Figure 10. Negative Output Voltage Swing versus Load Resistance

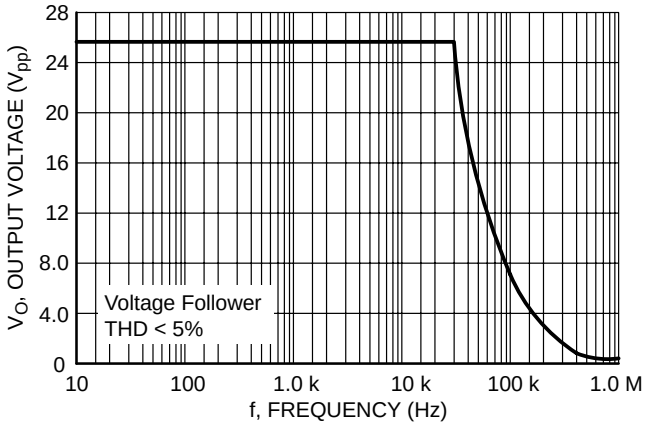

Figure 11. Power Bandwidth (Large Signal Swing versus Frequency)

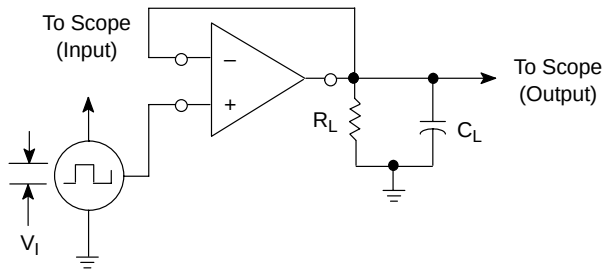

Figure 12. Transient Response Test Circuit

PACKAGE DIMENSIONS

SO–8
D SUFFIX
CASE 751–07
ISSUE V

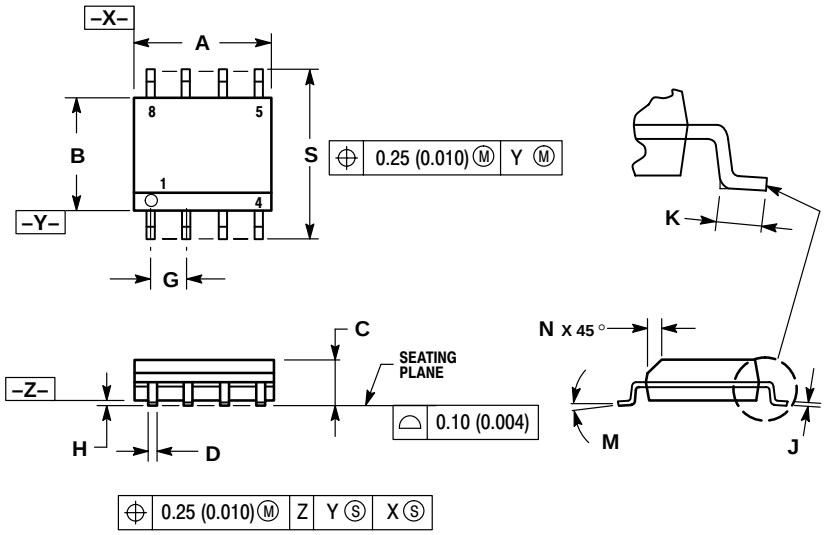

NOTES:
1. DIMENSIONING AND TOLERANCING PER ANSI Y14.5M, 1982.
2. CONTROLLING DIMENSION: MILLIMETER.
3. DIMENSION A AND B DO NOT INCLUDE MOLD PROTRUSION.
4. MAXIMUM MOLD PROTRUSION 0.15 (0.006) PER SIDE.
5. DIMENSION D DOES NOT INCLUDE DAMBAR PROTRUSION. ALLOWABLE DAMBAR PROTRUSION SHALL BE 0.127 (0.005) TOTAL IN EXCESS OF THE D DIMENSION AT MAXIMUM MATERIAL CONDITION.

	MILLIMETERS		INCHES	
DIM	MIN	MAX	MIN	MAX
A	4.80	5.00	0.189	0.197
B	3.80	4.00	0.150	0.157
C	1.35	1.75	0.053	0.069
D	0.33	0.51	0.013	0.020
G	1.27 BSC		0.050 BSC	
H	0.10	0.25	0.004	0.010
J	0.19	0.25	0.007	0.010
K	0.40	1.27	0.016	0.050
M	0 °	8 °	0 °	8 °
N	0.25	0.50	0.010	0.020
S	5.80	6.20	0.228	0.244

Notes

Notes

ON Semiconductor and  are trademarks of Semiconductor Components Industries, LLC (SCILLC). SCILLC reserves the right to make changes without further notice to any products herein. SCILLC makes no warranty, representation or guarantee regarding the suitability of its products for any particular purpose, nor does SCILLC assume any liability arising out of the application or use of any product or circuit, and specifically disclaims any and all liability, including without limitation special, consequential or incidental damages. "Typical" parameters which may be provided in SCILLC data sheets and/or specifications can and do vary in different applications and actual performance may vary over time. All operating parameters, including "Typicals" must be validated for each customer application by customer's technical experts. SCILLC does not convey any license under its patent rights nor the rights of others. SCILLC products are not designed, intended, or authorized for use as components in systems intended for surgical implant into the body, or other applications intended to support or sustain life, or for any other application in which the failure of the SCILLC product could create a situation where personal injury or death may occur. Should Buyer purchase or use SCILLC products for any such unintended or unauthorized application, Buyer shall indemnify and hold SCILLC and its officers, employees, subsidiaries, affiliates, and distributors harmless against all claims, costs, damages, and expenses, and reasonable attorney fees arising out of, directly or indirectly, any claim of personal injury or death associated with such unintended or unauthorized use, even if such claim alleges that SCILLC was negligent regarding the design or manufacture of the part. SCILLC is an Equal Opportunity/Affirmative Action Employer.

PUBLICATION ORDERING INFORMATION

NORTH AMERICA Literature Fulfillment:
Literature Distribution Center for ON Semiconductor
P.O. Box 5163, Denver, Colorado 80217 USA
Phone: 303–675–2175 or 800–344–3860 Toll Free USA/Canada
Fax: 303–675–2176 or 800–344–3867 Toll Free USA/Canada
Email: ONlit@hibbertco.com
Fax Response Line: 303–675–2167 or 800–344–3810 Toll Free USA/Canada

N. American Technical Support: 800–282–9855 Toll Free USA/Canada

EUROPE: LDC for ON Semiconductor – European Support
German Phone: (+1) 303–308–7140 (Mon–Fri 2:30pm to 7:00pm CET)
Email: ONlit–german@hibbertco.com
French Phone: (+1) 303–308–7141 (Mon–Fri 2:00pm to 7:00pm CET)
Email: ONlit–french@hibbertco.com
English Phone: (+1) 303–308–7142 (Mon–Fri 12:00pm to 5:00pm GMT)
Email: ONlit@hibbertco.com

EUROPEAN TOLL–FREE ACCESS*: 00–800–4422–3781
*Available from Germany, France, Italy, UK, Ireland

CENTRAL/SOUTH AMERICA:
Spanish Phone: 303–308–7143 (Mon–Fri 8:00am to 5:00pm MST)
Email: ONlit–spanish@hibbertco.com
Toll–Free from Mexico: Dial 01–800–288–2872 for Access –
then Dial 866–297–9322

ASIA/PACIFIC: LDC for ON Semiconductor – Asia Support
Phone: 303–675–2121 (Tue–Fri 9:00am to 1:00pm, Hong Kong Time)
Toll Free from Hong Kong & Singapore:
001–800–4422–3781
Email: ONlit–asia@hibbertco.com

JAPAN: ON Semiconductor, Japan Customer Focus Center
4–32–1 Nishi–Gotanda, Shinagawa–ku, Tokyo, Japan 141–0031
Phone: 81–3–5740–2700
Email: r14525@onsemi.com

ON Semiconductor Website: http://onsemi.com

For additional information, please contact your local
Sales Representative.