MC34164, MC33164, NCV33164

Micropower Undervoltage Sensing Circuits

The MC34164 series are undervoltage sensing circuits specifically designed for use as reset controllers in portable microprocessor based systems where extended battery life is required. These devices offer the designer an economical solution for low voltage detection with a single external resistor. The MC34164 series features a bandgap reference, a comparator with precise thresholds and built−in hysteresis to prevent erratic reset operation, an open collector reset output capable of sinking in excess of 6.0 mA, and guaranteed operation down to 1.0 V input with extremely low standby current. The MC devices are packaged in 3−pin TO−92 (TO−226AA), micro size TSOP−5, 8−pin SOIC−8 and Micro8™ surface mount packages. The NCV device is packaged in SOIC−8.

Applications include direct monitoring of the 3.0 V or 5.0 V MPU/logic power supply used in appliance, automotive, consumer, and industrial equipment.

Features

- Temperature Compensated Reference
- Monitors 3.0 V (MC34164−3) or 5.0 V (MC34164−5) Power Supplies
- Precise Comparator Thresholds Guaranteed Over Temperature
- Comparator Hysteresis Prevents Erratic Reset
- Reset Output Capable of Sinking in Excess of 6.0 mA
- Internal Clamp Diode for Discharging Delay Capacitor
- Guaranteed Reset Operation With 1.0 V Input
- Extremely Low Standby Current: As Low as 9.0 μA
- Economical TO−92 (TO−226AA), TSOP−5, SOIC−8 and Micro8 Surface Mount Packages
- NCV Prefix for Automotive and Other Applications Requiring Site and Control Changes
- These Devices are Pb−Free and are RoHS Compliant

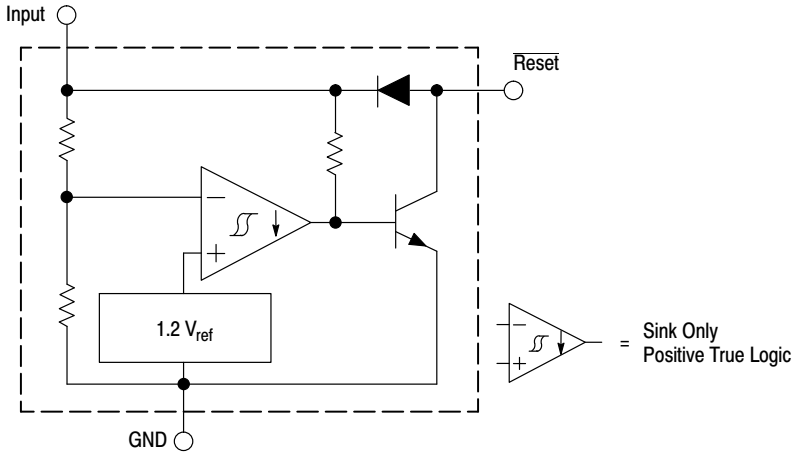

Figure 1. Representative Block Diagram

This device contains 28 active transistors.

ON Semiconductor®

www.onsemi.com

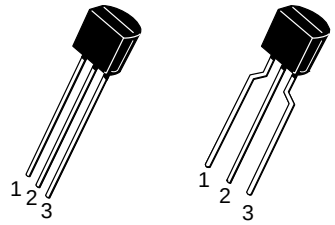

STRAIGHT LEAD BULK PACK | BENT LEAD TAPE & REEL AMMO PACK

TO−92 (TO−226AA)
P SUFFIX
CASE 29

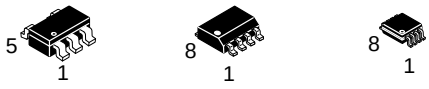

TSOP−5
SN SUFFIX
CASE 483

SOIC−8
D SUFFIX
CASE 751

Micro8
DM SUFFIX
CASE 846A

PIN CONNECTIONS

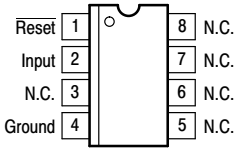

(Top View)

TSOP−5

Pin 1. Ground
2. Input
3. Reset
4. NC
5. NC

TO−92

Pin 1. Reset
2. Input
3. Ground

ORDERING INFORMATION

See detailed ordering and shipping information in the package dimensions section on page 7 of this data sheet.

DEVICE MARKING INFORMATION

See general marking information in the device marking section on page 8 of this data sheet.

© Semiconductor Components Industries, LLC, 2016

MAXIMUM RATINGS

Rating	Symbol	Value	Unit
Power Input Supply Voltage	V_{in}	−1.0 to 12	V
$\overline{\text{Reset}}$ Output Voltage	V_O	−1.0 to 12	V
$\overline{\text{Reset}}$ Output Sink Current	I_{Sink}	Internally Limited	mA
Clamp Diode Forward Current, Reset to Input Pin (Note 1)	IF	100	mA
Power Dissipation and Thermal Characteristics P Suffix, Plastic Package Maximum Power Dissipation @ T_A = 25°C Thermal Resistance, Junction−to−Air D Suffix, Plastic Package Maximum Power Dissipation @ T_A = 25°C Thermal Resistance, Junction−to−Air DM Suffix, Plastic Package Maximum Power Dissipation @ T_A = 25°C Thermal Resistance, Junction−to−Air	 P_D $R_{\theta JA}$ P_D $R_{\theta JA}$ P_D $R_{\theta JA}$	 700 178 700 178 520 240	 mW °C/W mW °C/W mW °C/W
Operating Junction Temperature	T_J	+150	°C
Operating Ambient Temperature Range MC34164 Series MC33164 Series, NCV33164	T_A	 0 to +70 − 40 to +125	°C
Storage Temperature Range	T_{stg}	− 65 to +150	°C
Electrostatic Discharge Sensitivity (ESD) Human Body Model (HBM) Machine Model (MM)	ESD	 4000 200	V

Stresses exceeding those listed in the Maximum Ratings table may damage the device. If any of these limits are exceeded, device functionality should not be assumed, damage may occur and reliability may be affected.

MC34164−3, MC33164−3 SERIES, NCV33164−3

ELECTRICAL CHARACTERISTICS (For typical values T_A = 25°C, for min/max values T_A is the operating ambient temperature range that applies [Notes 2 & 3], unless otherwise noted.)

Characteristic	Symbol	Min	Typ	Max	Unit
COMPARATOR					
Threshold Voltage High State Output (V_{in} Increasing) Low State Output (V_{in} Decreasing) Hysteresis (I_{Sink} = 100 μA)	 V_{IH} V_{IL} V_H	 2.55 2.55 0.03	 2.71 2.65 0.06	 2.80 2.80 −	V
$\overline{\text{RESET}}$ OUTPUT					
Output Sink Saturation (V_{in} = 2.4 V, I_{Sink} = 1.0 mA) (V_{in} = 1.0 V, I_{Sink} = 0.25 mA)	V_{OL}	 − −	 0.14 0.1	 0.4 0.3	V
Output Sink Current (V_{in}, $\overline{\text{Reset}}$ = 2.4 V)	I_{Sink}	6.0	12	30	mA
Output Off−State Leakage (V_{in}, $\overline{\text{Reset}}$ = 3.0 V) (V_{in}, $\overline{\text{Reset}}$ = 10 V)	$I_{\overline{R}}$(leak)	 − −	 0.02 0.02	 0.5 1.0	μA
Clamp Diode Forward Voltage, Reset to Input Pin (I_F = 5.0 mA)	V_F	0.6	0.9	1.2	V
TOTAL DEVICE					
Operating Input Voltage Range	V_{in}	1.0 to 10	−	−	V
Quiescent Input Current V_{in} = 3.0 V V_{in} = 6.0 V	I_{in}	 − −	 9.0 24	 15 40	μA

1. Maximum package power dissipation limits must be observed.
2. Low duty cycle pulse techniques are used during test to maintain junction temperature as close to ambient as possible.
3. T_{low} = 0°C for MC34164 T_{high} = +70°C for MC34164
   = − 40°C for MC33164, NCV33164 = +125°C for MC33164, NCV33164

MC34164−5, MC33164−5 SERIES, NCV33164−5

ELECTRICAL CHARACTERISTICS (For typical values T_A = 25°C, for min/max values T_A is the operating ambient temperature range that applies [Notes 5 & 6], unless otherwise noted.)

Characteristic	Symbol	Min	Typ	Max	Unit
COMPARATOR					
Threshold Voltage High State Output (V_{in} Increasing) Low State Output (V_{in} Decreasing) Hysteresis (I_{Sink} = 100 μA)	 V_{IH} V_{IL} V_H	 4.15 4.15 0.02	 4.33 4.27 0.09	 4.45 4.45 –	V
$\overline{\text{RESET}}$ OUTPUT					
Output Sink Saturation (V_{in} = 4.0 V, I_{Sink} = 1.0 mA) (V_{in} = 1.0 V, I_{Sink} = 0.25 mA)	V_{OL}	 – –	 0.14 0.1	 0.4 0.3	V
Output Sink Current (V_{in}, $\overline{\text{Reset}}$ = 4.0 V)	I_{Sink}	7.0	20	50	mA
Output Off−State Leakage (V_{in}, $\overline{\text{Reset}}$ = 5.0 V) (V_{in}, $\overline{\text{Reset}}$ = 10 V)	$I_{\overline{R}(leak)}$	 – –	 0.02 0.02	 0.5 2.0	μA
Clamp Diode Forward Voltage, Reset to Input Pin (I_F = 5.0 mA)	V_F	0.6	0.9	1.2	V
TOTAL DEVICE					
Operating Input Voltage Range	V_{in}	1.0 to 10	–	–	V
Quiescent Input Current V_{in} = 5.0 V V_{in} = 10 V	I_{in}	 – –	 12 32	 20 50	μA

4. Maximum package power dissipation limits must be observed.
5. Low duty cycle pulse techniques are used during test to maintain junction temperature as close to ambient as possible.
6. T_{low} = 0°C for MC34164 = − 40°C for MC33164, NCV33164 T_{high} = +70°C for MC34164 = +125°C for MC33164, NCV33164
7. NCV prefix is for automotive and other applications requiring site and change control.

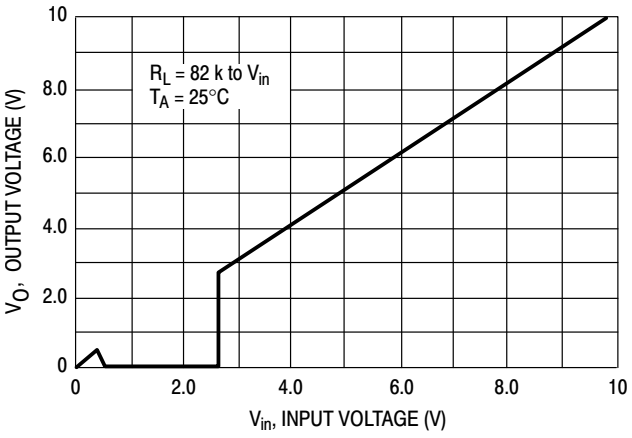

Figure 2. MC3X164−3 $\overline{\text{Reset}}$ Output Voltage versus Input Voltage

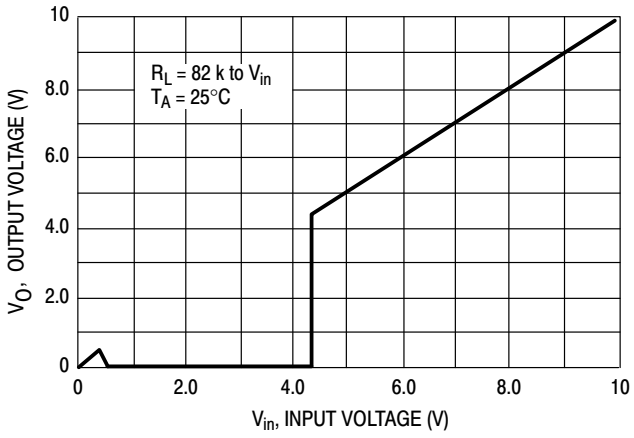

Figure 3. MC3X164−5 $\overline{\text{Reset}}$ Output Voltage versus Input Voltage

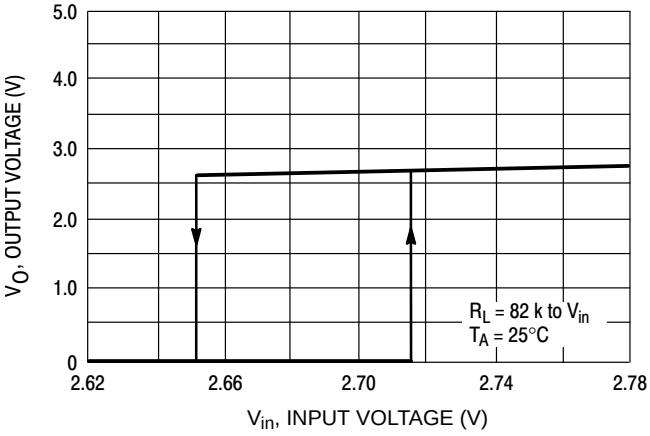

Figure 4. MC3X164−3 $\overline{\text{Reset}}$ Output Voltage versus Input Voltage

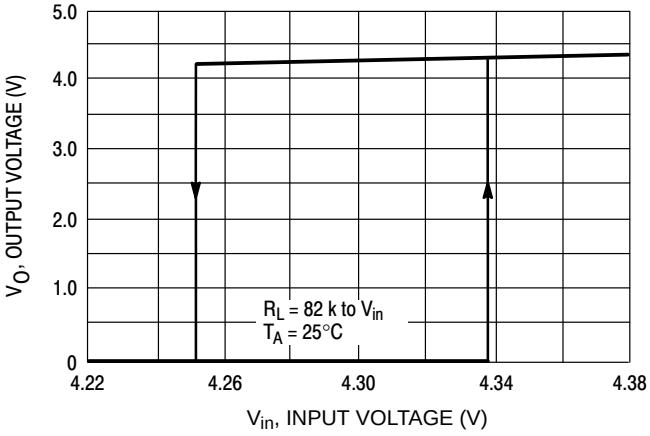

Figure 5. MC3X164−5 $\overline{\text{Reset}}$ Output Voltage versus Input Voltage

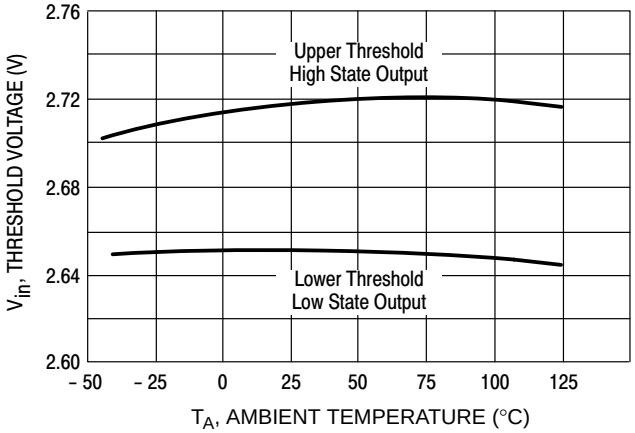

Figure 6. MC3X164−3 Comparator Threshold Voltage versus Temperature

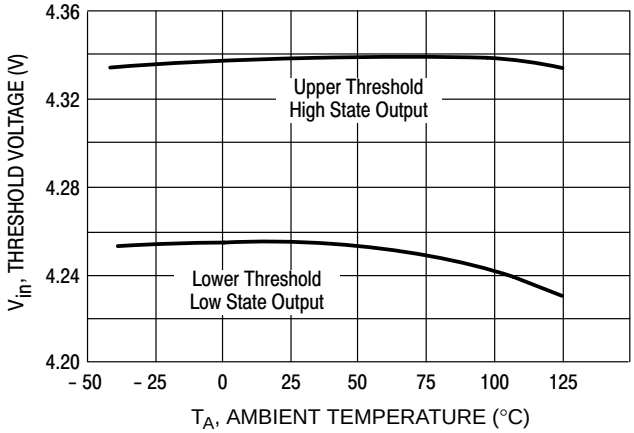

Figure 7. MC3X164−5 Comparator Threshold Voltage versus Temperature

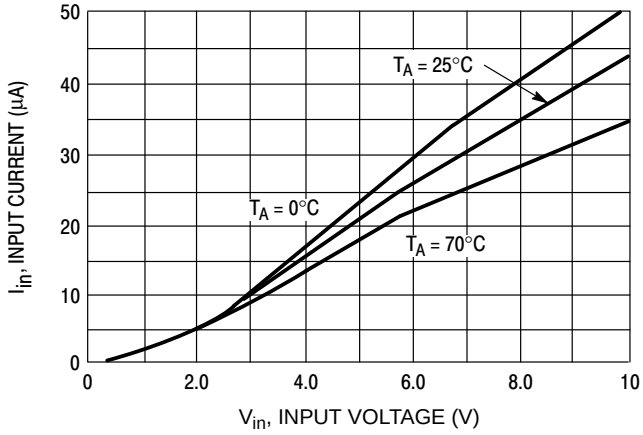

Figure 8. MC3X164−3 Input Current versus Input Voltage

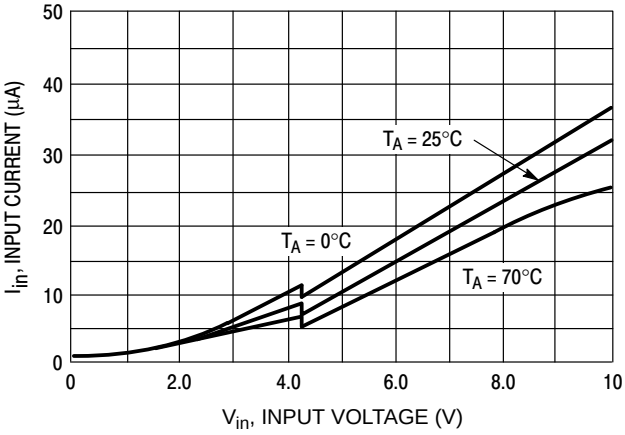

Figure 9. MC3X164−5 Input Current versus Input Voltage

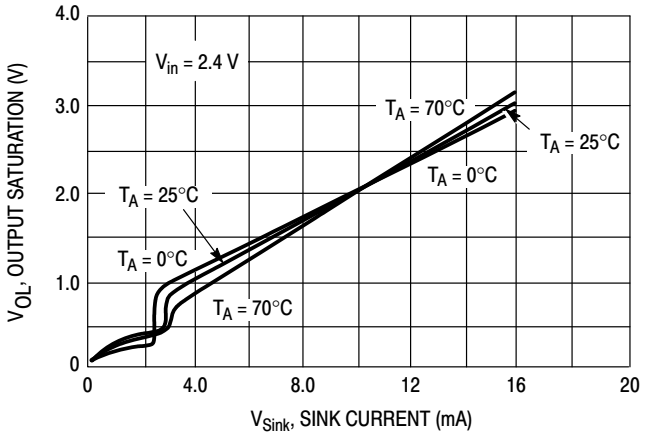

Figure 10. MC3X164−3 $\overline{\text{Reset}}$ Output Saturation versus Sink Current

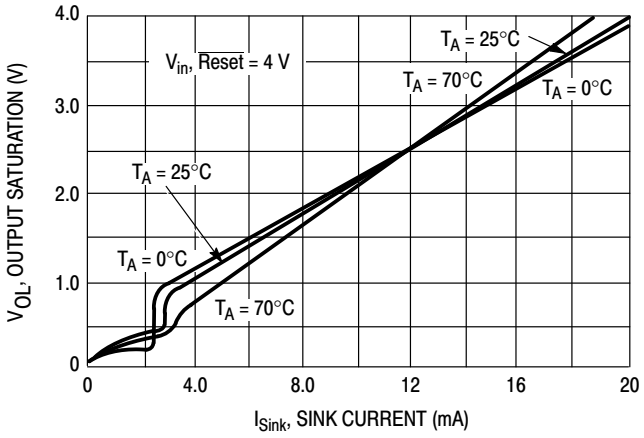

Figure 11. MC3X164−5 $\overline{\text{Reset}}$ Output Saturation versus Sink Current

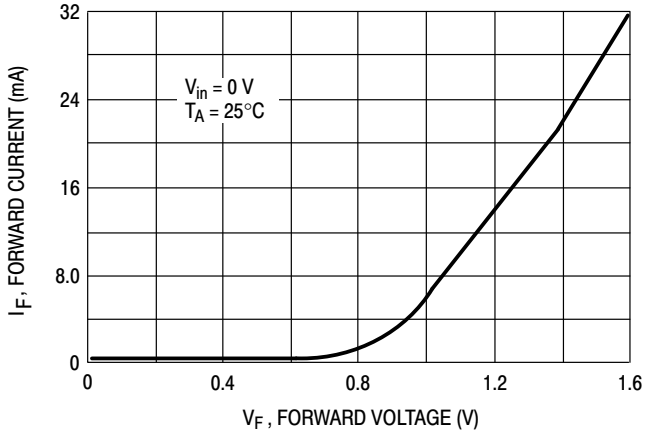

Figure 12. Clamp Diode Forward Current versus Voltage

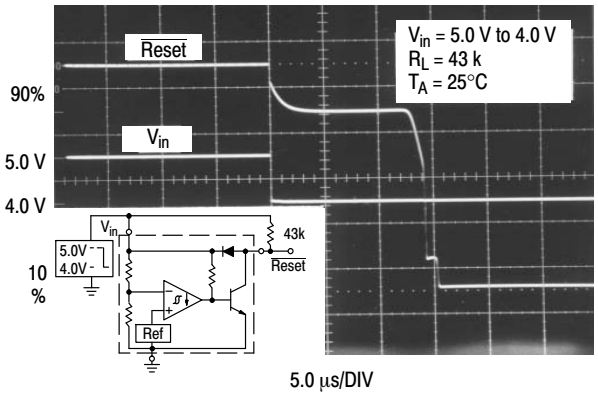

Figure 13. $\overline{\text{Reset}}$ Delay Time (MC3X164−5 Shown)

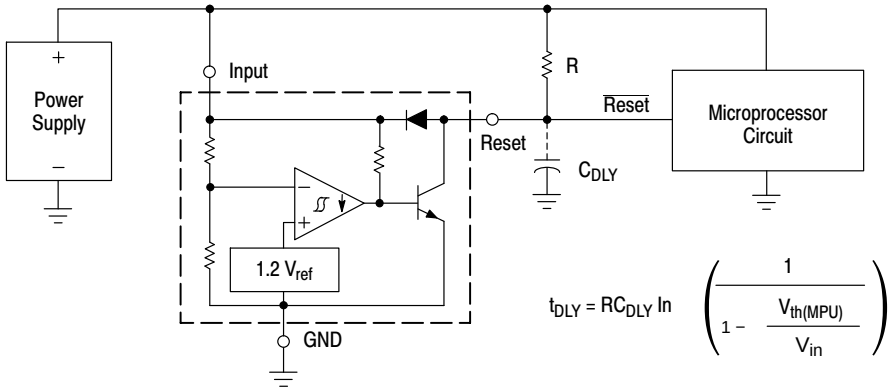

A time delayed reset can be accomplished with the addition of C_{DLY}. For systems with extremely fast power supply rise times (< 500 ns) it is recommended that the RC_{DLY} time constant be greater than 5.0 μs. $V_{th(MPU)}$ is the microprocessor reset input threshold.

Figure 14. Low Voltage Microprocessor Reset

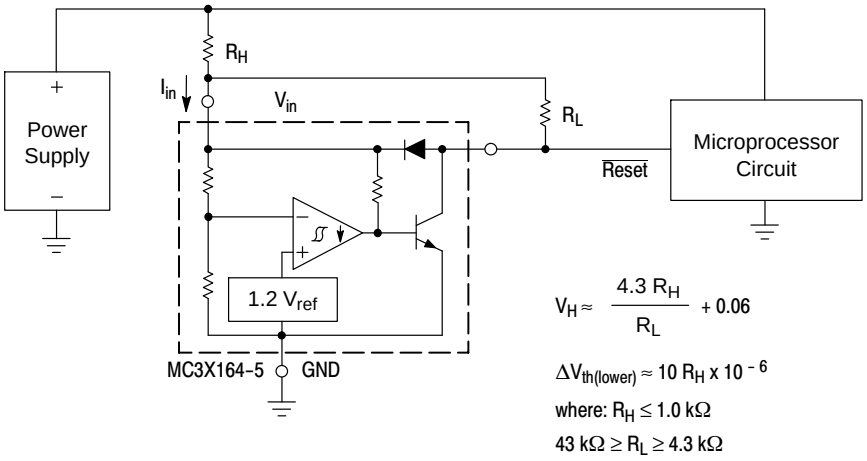

Test Data			
V_H (mV)	ΔV_{th} (mV)	R_H (Ω)	R_L (kΩ)
60	0	0	43
103	1.0	100	10
123	1.0	100	6.8
160	1.0	100	4.3
155	2.2	220	10
199	2.2	220	6.8
280	2.2	220	4.3
262	4.7	470	10
306	4.7	470	8.2
357	4.7	470	6.8
421	4.7	470	5.6
530	4.7	470	4.3

Comparator hysteresis can be increased with the addition of resistor R_H. The hysteresis equation has been simplified and does not account for the change of input current I_{in} as V_{in} crosses the comparator threshold (Figure 8). An increase of the lower threshold $\Delta V_{th(lower)}$ will be observed due to I_{in} which is typically 10 μA at 4.3 V. The equations are accurate to ±10% with R_H less than 1.0 kΩ and R_L between 4.3 kΩ and 43 kΩ.

Figure 15. Low Voltage Microprocessor Reset With Additional Hysteresis (MC3X164−5 Shown)

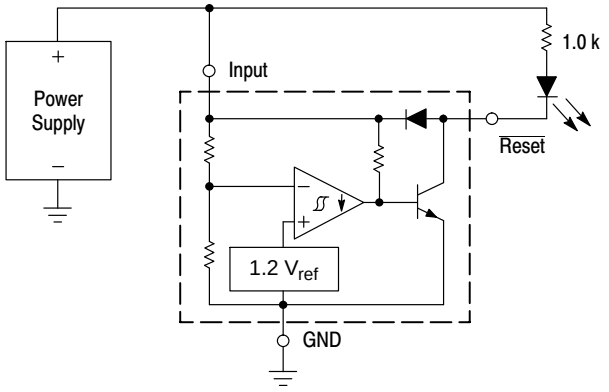

Figure 16. Voltage Monitor

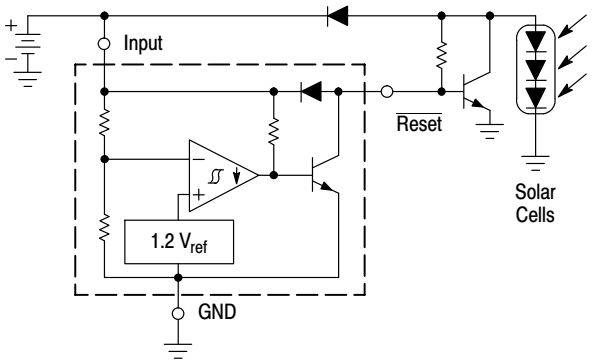

Figure 17. Solar Powered Battery Charger

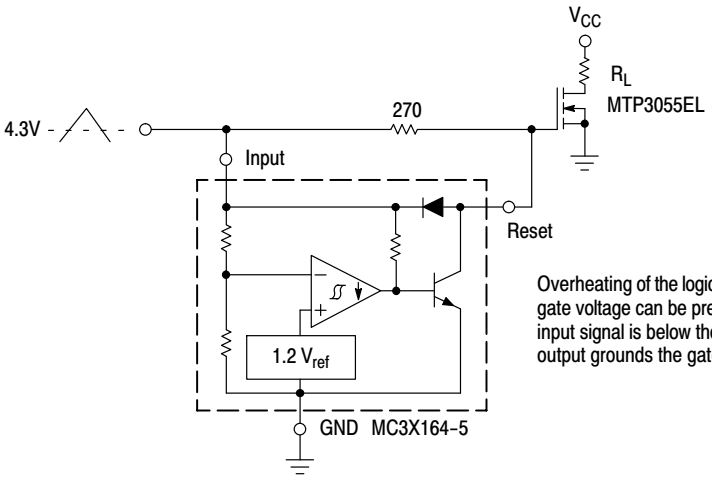

Overheating of the logic level power MOSFET due to insufficient gate voltage can be prevented with the above circuit. When the input signal is below the 4.3 V threshold of the MC3X164−5, its output grounds the gate of the L^2 MOSFET.

Figure 18. MOSFET Low Voltage Gate Drive Protection Using the MC3X164−5

ORDERING INFORMATION

Device	Package	Shipping†
MC33164D−3G	SOIC−8 (Pb−Free)	98 Units / Rail
MC33164D−3R2G	SOIC−8 (Pb−Free)	2500 Units / Tape & Reel
NCV33164D−3R2G*	SOIC−8 (Pb−Free)	
MC33164DM−3R2G	Micro8 (Pb−Free)	4000 Units / Tape & Reel
MC33164P−3G	TO−92 (Pb−Free)	2000 Units / Box
MC33164P−3RAG	TO−92 (Pb−Free)	2000 Units / Tape & Reel
MC33164P−3RPG	TO−92 (Pb−Free)	2000 Units / Pack
MC33164D−5G	SOIC−8 (Pb−Free)	98 Units / Rail
MC33164D−5R2G	SOIC−8 (Pb−Free)	2500 Units / Tape & Reel
NCV33164D−5R2G*	SOIC−8 (Pb−Free)	
MC33164DM−5R2G	Micro8 (Pb−Free)	4000 Units / Tape & Reel
MC33164P−5G	TO−92 (Pb−Free)	2000 Units / Box
MC33164P−5RAG	TO−92 (Pb−Free)	2000 Units / Tape & Reel
MC33164P−5RPG	TO−92 (Pb−Free)	2000 Units / Pack
MC34164D−3G	SOIC−8 (Pb−Free)	98 Units / Rail
MC34164D−3R2G	SOIC−8 (Pb−Free)	2500 Units / Tape & Reel
MC34164DM−3R2G	Micro8 (Pb−Free)	4000 Units / Tape & Reel
MC34164P−3G	TO−92 (Pb−Free)	2000 Units / Box
MC34164P−3RPG	TO−92 (Pb−Free)	2000 Units / Pack
MC34164D−5G	SOIC−8 (Pb−Free)	98 Units / Rail
MC34164D−5R2G	SOIC−8 (Pb−Free)	2500 Units / Tape & Reel
MC34164DM−5R2G	Micro8 (Pb−Free)	4000 Units / Tape & Reel
MC34164SN−5T1G	TSOP−5 (Pb−Free)	3000 Units / Tape & Reel
MC34164P−5G	TO−92 (Pb−Free)	2000 Units / Box
MC34164P−5RAG	TO−92 (Pb−Free)	2000 Units / Tape & Reel
MC34164P−5RPG	TO−92 (Pb−Free)	2000 Units / Pack

*NCV33164: T_{low} = −40°C, T_{high} = +125°C. Guaranteed by design. NCV prefix is for automotive and other applications requiring site and change control.

†For information on tape and reel specifications, including part orientation and tape sizes, please refer to our Tape and Reel Packaging Specifications Brochure, BRD8011/D.

PIN CONNECTIONS AND MARKING DIAGRAMS

TSOP−5
SN SUFFIX
CASE 483

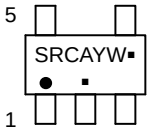

SOIC−8
D SUFFIX
CASE 751

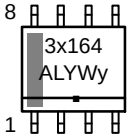

Micro8
MC33164DM
CASE 846A

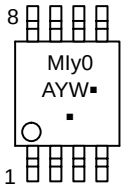

Micro8
MC34164DM
CASE 846A

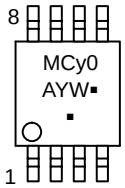

TO−92
MC3x164P−yRA
MC3x164P−yRP
MC3x164P−y
CASE 29

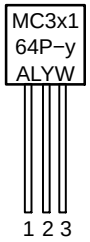

SRC	= Device Code
x	= Device Number 3 or 4
y	= Suffix Number 3 or 5
A	= Assembly Location
L	= Wafer Lot
Y	= Year
W	= Work Week
▪	= Pb−Free

PACKAGE DIMENSIONS

TO−92 (TO−226AA)
P SUFFIX
CASE 29−11
ISSUE AM

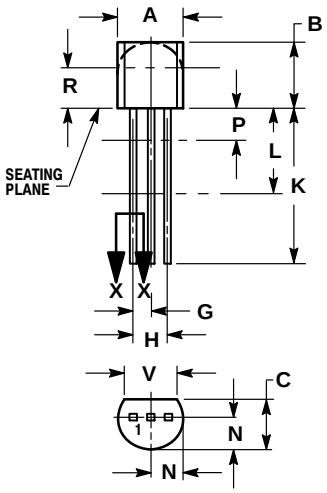

STRAIGHT LEAD
BULK PACK

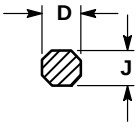

SECTION X−X

NOTES:
1. DIMENSIONING AND TOLERANCING PER ANSI Y14.5M, 1982.
2. CONTROLLING DIMENSION: INCH.
3. CONTOUR OF PACKAGE BEYOND DIMENSION R IS UNCONTROLLED.
4. LEAD DIMENSION IS UNCONTROLLED IN P AND BEYOND DIMENSION K MINIMUM.

	INCHES		MILLIMETERS	
DIM	MIN	MAX	MIN	MAX
A	0.175	0.205	4.45	5.20
B	0.170	0.210	4.32	5.33
C	0.125	0.165	3.18	4.19
D	0.016	0.021	0.407	0.533
G	0.045	0.055	1.15	1.39
H	0.095	0.105	2.42	2.66
J	0.015	0.020	0.39	0.50
K	0.500	---	12.70	---
L	0.250	---	6.35	---
N	0.080	0.105	2.04	2.66
P	---	0.100	---	2.54
R	0.115	---	2.93	---
V	0.135	---	3.43	---

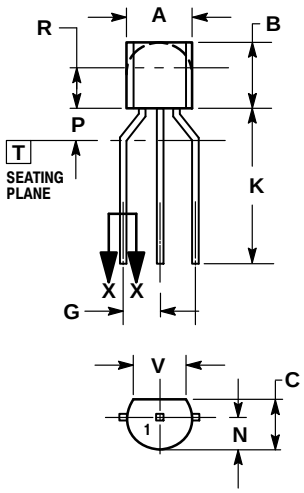

BENT LEAD
TAPE & REEL
AMMO PACK

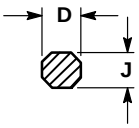

SECTION X−X

NOTES:
1. DIMENSIONING AND TOLERANCING PER ASME Y14.5M, 1994.
2. CONTROLLING DIMENSION: MILLIMETERS.
3. CONTOUR OF PACKAGE BEYOND DIMENSION R IS UNCONTROLLED.
4. LEAD DIMENSION IS UNCONTROLLED IN P AND BEYOND DIMENSION K MINIMUM.

	MILLIMETERS	
DIM	MIN	MAX
A	4.45	5.20
B	4.32	5.33
C	3.18	4.19
D	0.40	0.54
G	2.40	2.80
J	0.39	0.50
K	12.70	---
N	2.04	2.66
P	1.50	4.00
R	2.93	---
V	3.43	---

PACKAGE DIMENSIONS

TSOP−5
SN SUFFIX
CASE 483−02
ISSUE M

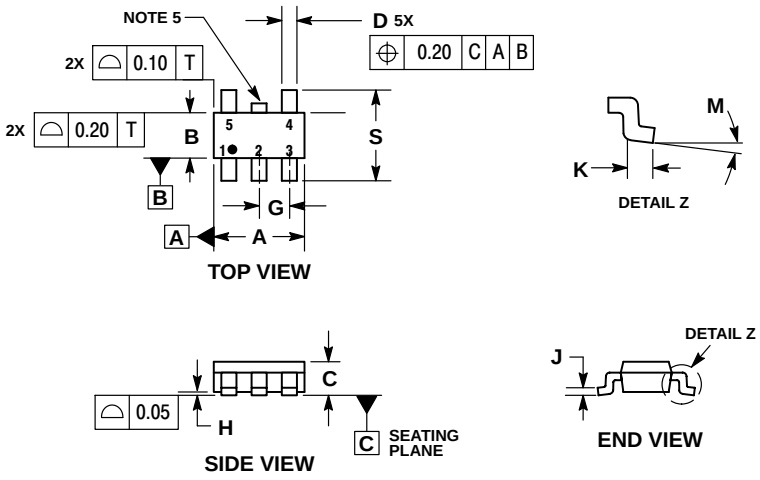

NOTES:
1. DIMENSIONING AND TOLERANCING PER ASME Y14.5M, 1994.
2. CONTROLLING DIMENSION: MILLIMETERS.
3. MAXIMUM LEAD THICKNESS INCLUDES LEAD FINISH THICKNESS. MINIMUM LEAD THICKNESS IS THE MINIMUM THICKNESS OF BASE MATERIAL.
4. DIMENSIONS A AND B DO NOT INCLUDE MOLD FLASH, PROTRUSIONS, OR GATE BURRS. MOLD FLASH, PROTRUSIONS, OR GATE BURRS SHALL NOT EXCEED 0.15 PER SIDE. DIMENSION A.
5. OPTIONAL CONSTRUCTION: AN ADDITIONAL TRIMMED LEAD IS ALLOWED IN THIS LOCATION. TRIMMED LEAD NOT TO EXTEND MORE THAN 0.2 FROM BODY.

	MILLIMETERS	
DIM	MIN	MAX
A	2.85	3.15
B	1.35	1.65
C	0.90	1.10
D	0.25	0.50
G	0.95 BSC	
H	0.01	0.10
J	0.10	0.26
K	0.20	0.60
M	0 °	10 °
S	2.50	3.00

SOLDERING FOOTPRINT*

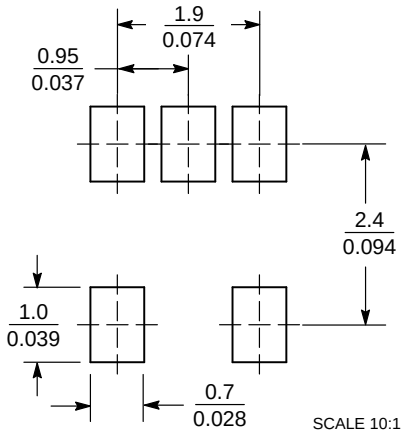

*For additional information on our Pb−Free strategy and soldering details, please download the ON Semiconductor Soldering and Mounting Techniques Reference Manual, SOLDERRM/D.

PACKAGE DIMENSIONS

SOIC−8
D SUFFIX
CASE 751−07
ISSUE AK

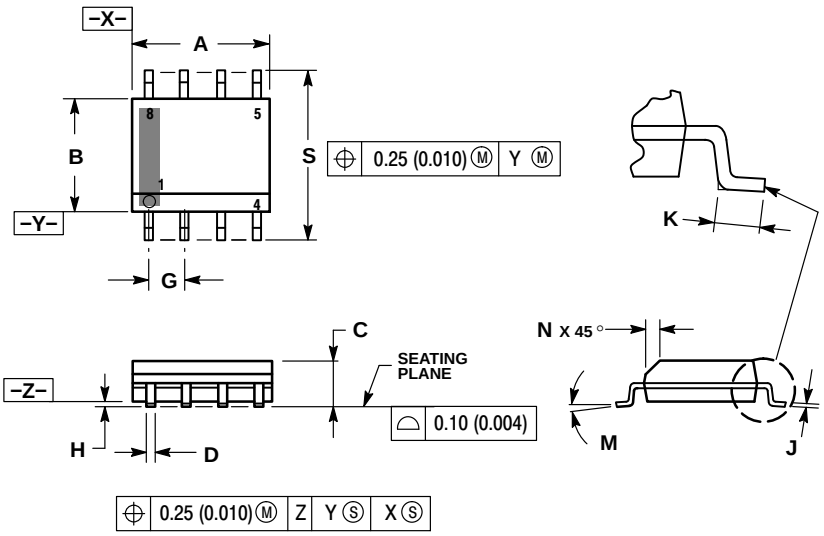

NOTES:
1. DIMENSIONING AND TOLERANCING PER ANSI Y14.5M, 1982.
2. CONTROLLING DIMENSION: MILLIMETER.
3. DIMENSION A AND B DO NOT INCLUDE MOLD PROTRUSION.
4. MAXIMUM MOLD PROTRUSION 0.15 (0.006) PER SIDE.
5. DIMENSION D DOES NOT INCLUDE DAMBAR PROTRUSION. ALLOWABLE DAMBAR PROTRUSION SHALL BE 0.127 (0.005) TOTAL IN EXCESS OF THE D DIMENSION AT MAXIMUM MATERIAL CONDITION.
6. 751−01 THRU 751−06 ARE OBSOLETE. NEW STANDARD IS 751−07.

	MILLIMETERS		INCHES	
DIM	MIN	MAX	MIN	MAX
A	4.80	5.00	0.189	0.197
B	3.80	4.00	0.150	0.157
C	1.35	1.75	0.053	0.069
D	0.33	0.51	0.013	0.020
G	1.27 BSC		0.050 BSC	
H	0.10	0.25	0.004	0.010
J	0.19	0.25	0.007	0.010
K	0.40	1.27	0.016	0.050
M	0 °	8 °	0 °	8 °
N	0.25	0.50	0.010	0.020
S	5.80	6.20	0.228	0.244

SOLDERING FOOTPRINT*

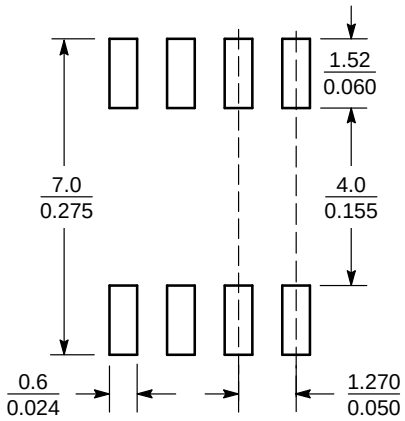

SCALE 6:1 (mm / inches)

*For additional information on our Pb−Free strategy and soldering details, please download the ON Semiconductor Soldering and Mounting Techniques Reference Manual, SOLDERRM/D.

PACKAGE DIMENSIONS

Micro8
DM SUFFIX
CASE 846A−02
ISSUE J

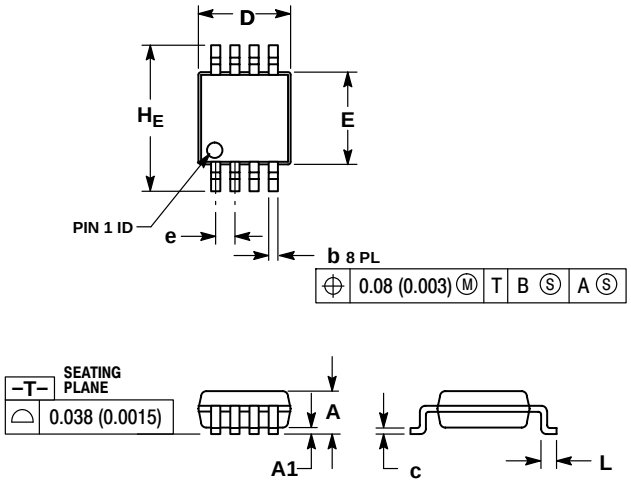

NOTES:
1. DIMENSIONING AND TOLERANCING PER ANSI Y14.5M, 1982.
2. CONTROLLING DIMENSION: MILLIMETER.
3. DIMENSION A DOES NOT INCLUDE MOLD FLASH, PROTRUSIONS OR GATE BURRS. MOLD FLASH, PROTRUSIONS OR GATE BURRS SHALL NOT EXCEED 0.15 (0.006) PER SIDE.
4. DIMENSION B DOES NOT INCLUDE INTERLEAD FLASH OR PROTRUSION. INTERLEAD FLASH OR PROTRUSION SHALL NOT EXCEED 0.25 (0.010) PER SIDE.
5. 846A−01 OBSOLETE, NEW STANDARD 846A−02.

	MILLIMETERS			INCHES		
DIM	MIN	NOM	MAX	MIN	NOM	MAX
A	−−	−−	1.10	−−	−−	0.043
A1	0.05	0.08	0.15	0.002	0.003	0.006
b	0.25	0.33	0.40	0.010	0.013	0.016
c	0.13	0.18	0.23	0.005	0.007	0.009
D	2.90	3.00	3.10	0.114	0.118	0.122
E	2.90	3.00	3.10	0.114	0.118	0.122
e		0.65 BSC			0.026 BSC	
L	0.40	0.55	0.70	0.016	0.021	0.028
H_E	4.75	4.90	5.05	0.187	0.193	0.199

RECOMMENDED SOLDERING FOOTPRINT*

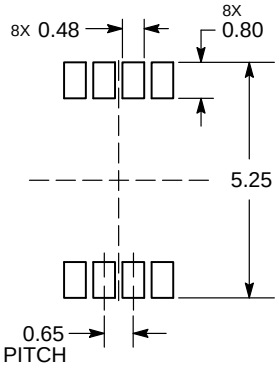

DIMENSION: MILLIMETERS

*For additional information on our Pb−Free strategy and soldering details, please download the ON Semiconductor Soldering and Mounting Techniques Reference Manual, SOLDERRM/D.

Micro8 is a trademark of International Rectifier.

ON Semiconductor and ON are trademarks of Semiconductor Components Industries, LLC dba ON Semiconductor or its subsidiaries in the United States and/or other countries. ON Semiconductor owns the rights to a number of patents, trademarks, copyrights, trade secrets, and other intellectual property. A listing of ON Semiconductor's product/patent coverage may be accessed at www.onsemi.com/site/pdf/Patent−Marking.pdf. ON Semiconductor reserves the right to make changes without further notice to any products herein. ON Semiconductor makes no warranty, representation or guarantee regarding the suitability of its products for any particular purpose, nor does ON Semiconductor assume any liability arising out of the application or use of any product or circuit, and specifically disclaims any and all liability, including without limitation special, consequential or incidental damages. Buyer is responsible for its products and applications using ON Semiconductor products, including compliance with all laws, regulations and safety requirements or standards, regardless of any support or applications information provided by ON Semiconductor. "Typical" parameters which may be provided in ON Semiconductor data sheets and/or specifications can and do vary in different applications and actual performance may vary over time. All operating parameters, including "Typicals" must be validated for each customer application by customer's technical experts. ON Semiconductor does not convey any license under its patent rights nor the rights of others. ON Semiconductor products are not designed, intended, or authorized for use as a critical component in life support systems or any FDA Class 3 medical devices or medical devices with a same or similar classification in a foreign jurisdiction or any devices intended for implantation in the human body. Should Buyer purchase or use ON Semiconductor products for any such unintended or unauthorized application, Buyer shall indemnify and hold ON Semiconductor and its officers, employees, subsidiaries, affiliates, and distributors harmless against all claims, costs, damages, and expenses, and reasonable attorney fees arising out of, directly or indirectly, any claim of personal injury or death associated with such unintended or unauthorized use, even if such claim alleges that ON Semiconductor was negligent regarding the design or manufacture of the part. ON Semiconductor is an Equal Opportunity/Affirmative Action Employer. This literature is subject to all applicable copyright laws and is not for resale in any manner.

PUBLICATION ORDERING INFORMATION

LITERATURE FULFILLMENT:
Literature Distribution Center for ON Semiconductor
19521 E. 32nd Pkwy, Aurora, Colorado 80011 USA
Phone: 303−675−2175 or 800−344−3860 Toll Free USA/Canada
Fax: 303−675−2176 or 800−344−3867 Toll Free USA/Canada
Email: orderlit@onsemi.com

N. American Technical Support: 800−282−9855 Toll Free USA/Canada
Europe, Middle East and Africa Technical Support:
Phone: 421 33 790 2910
Japan Customer Focus Center
Phone: 81−3−5817−1050

ON Semiconductor Website: **www.onsemi.com**

Order Literature: http://www.onsemi.com/orderlit

For additional information, please contact your local Sales Representative