Order this document by MC3362/D

MOTOROLA

MC3362

Low-Power Narrowband FM Receiver

. . . includes dual FM conversion with oscillators, mixers, quadrature discriminator, and meter drive/carrier detect circuitry. The MC3362 also has buffered first and second local oscillator outputs and a comparator circuit for FSK detection.

- Complete Dual Conversion Circuitry
- Low Voltage: V_{CC} = 2.0 to 6.0 Vdc
- Low Drain Current (3.6 mA (Typical) @ V_{CC} = 3.0 Vdc)
- Excellent Sensitivity: Input Voltage 0.6 μVrms (Typical) for 12 dB SINAD
- Externally Adjustable Carrier Detect Function
- Low Number of External Parts Required
- Manufactured Using Motorola's MOSAIC® Process Technology
- MC13135 is Preferred for New Designs

LOW–POWER DUAL CONVERSION FM RECEIVER

SEMICONDUCTOR TECHNICAL DATA

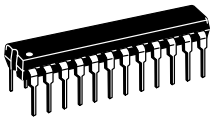

P SUFFIX
PLASTIC PACKAGE
CASE 724

DW SUFFIX
PLASTIC PACKAGE
CASE 751E
(SO-24L)



Figure 1. Simplified Application in a PLL Frequency Synthesized Receiver

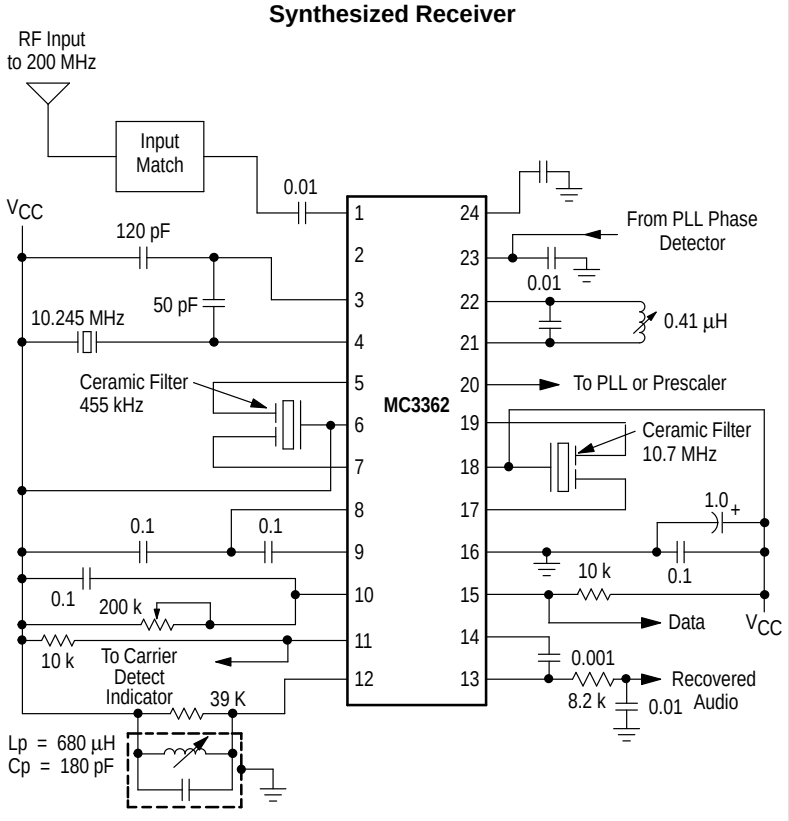

Figure 2. Pin Connections and Representative Block Diagram

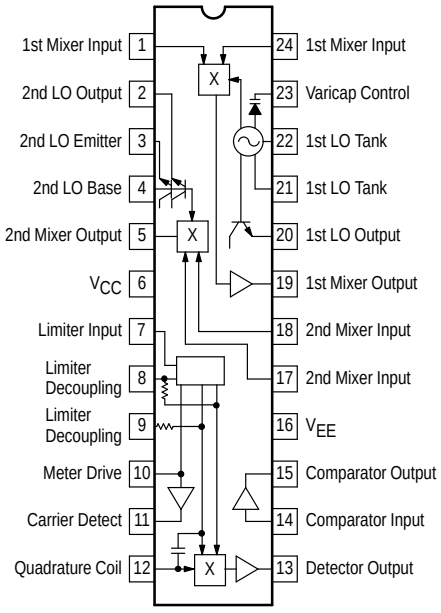

ORDERING INFORMATION

Device	Operating Temperature Range	Package
MC3362DW	T_A = – 40 to +85°C	SO–24L
MC3362P		Plastic DIP

© Motorola, Inc. 1996

MAXIMUM RATING (T_A = 25°C, unless otherwise noted)

Rating	Pin	Symbol	Value	Unit
Power Supply Voltage (See Figure 2)	6	$V_{CC(max)}$	7.0	Vdc
Operating Supply Voltage Range (Recommended)	6	V_{CC}	2.0 to 6.0	Vdc
Input Voltage ($V_{CC} \geq$ 5.0 Vdc)	1, 24	V_{1-24}	1.0	Vrms
Junction Temperature	–	T_J	150	°C
Operating Ambient Temperature Range	–	T_A	– 40 to + 85	°C
Storage Temperature Range	–	T_{stg}	– 65 to + 150	°C

ELECTRICAL CHARACTERISTICS (V_{CC} = 5.0 Vdc, f_o = 49.7 MHz, Deviation = 3.0 kHz, T_A = 25°C, Test Circuit of Figure 3, unless otherwise noted)

Characteristic	Pin	Min	Typ	Max	Units
Drain Current (Carrier Detect Low – See Figure 5)	6	–	4.5	7.0	mA
Input for –3.0 dB Limiting		–	0.7	2.0	μVrms
Input for 12 dB SINAD (See Figure 9)		–	0.6	–	μVrms
Series Equivalent Input Impedence		–	450–j350	–	Ω
Recovered Audio (RF signal level = 10 mV)	13	–	350	–	mVrms
Noise Output (RF signal level = 0 mV)	13	–	250	–	mVrms
Carrier Detect Threshold (below V_{CC})	10	–	0.64	–	Vdc
Meter Drive Slope	10	–	100	–	nA/dB
Input for 20 dB (S + N)/N (See Figure 7)		–	0.7	–	μVrms
First Mixer 3rd Order Intercept (Input)		–	–22	–	dBm
First Mixer Input Resistance (Rp)		–	690	–	Ω
First Mixer Input Capacitance (Cp)		–	7.2	–	pF
Conversion Voltage Gain, First Mixer		–	18	–	dB
Conversion Voltage Gain, Second Mixer		–	21	–	
Dector Output Resistance	13	–	1.4	–	kΩ

Figure 3. Test Circuit

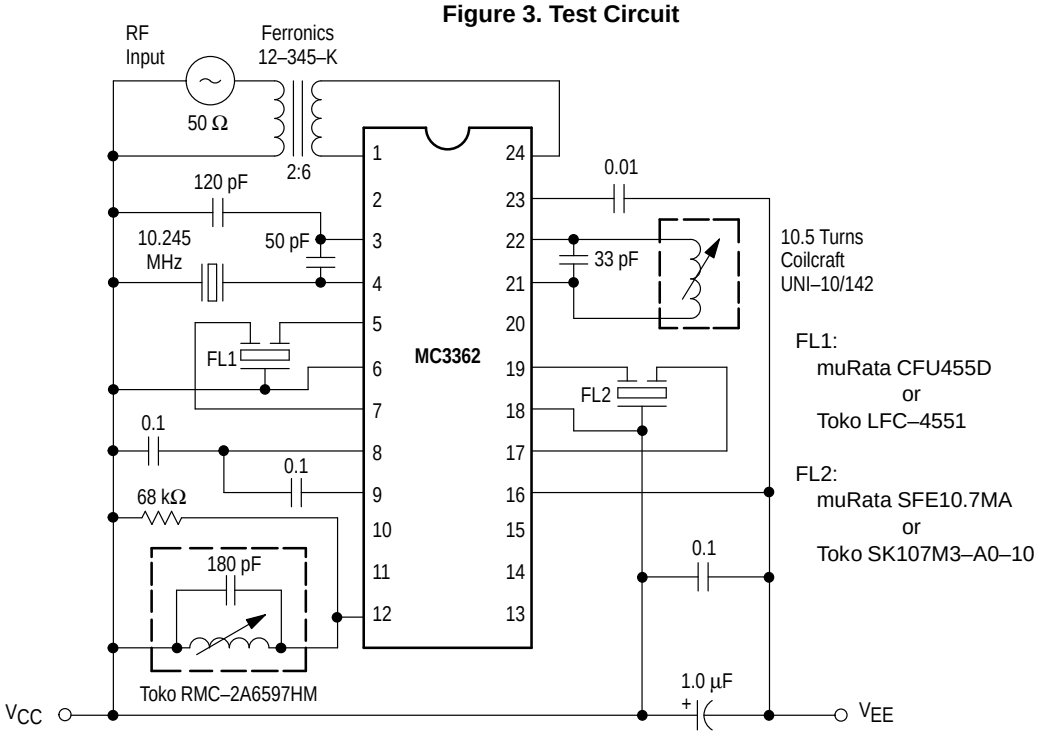

NOTE: See AN980 for Additional Design Information.

Figure 4. I_{Meter} versus Input

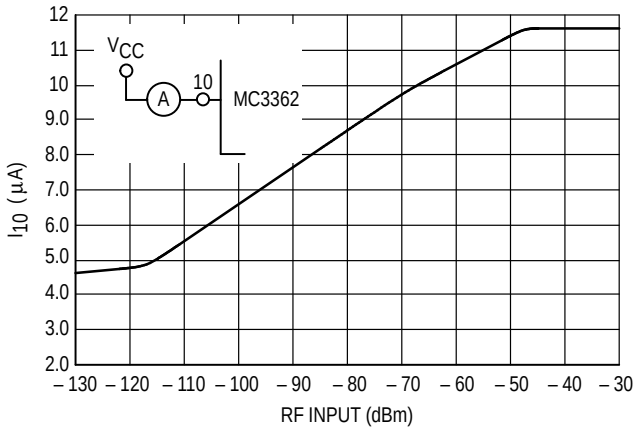

Figure 5. Drain Current, Recovered Audio versus Supply

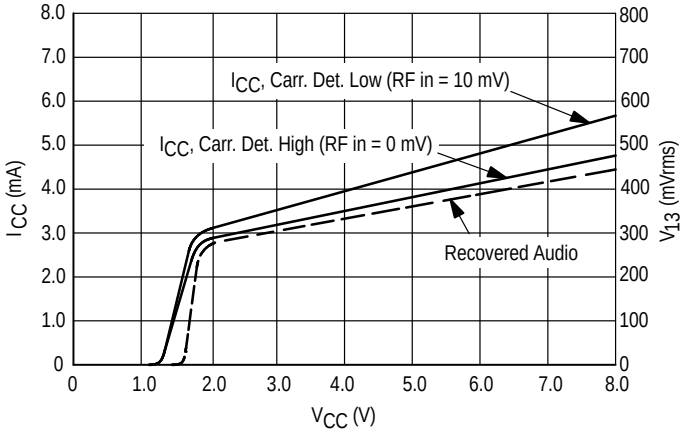

Figure 6. Signal Levels

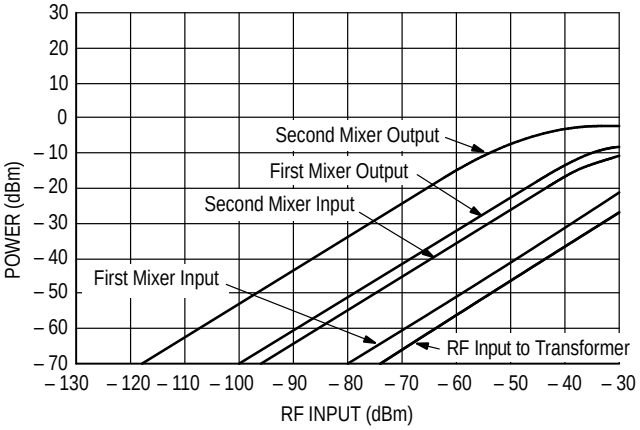

Figure 7. S + N, N, AMR versus Input

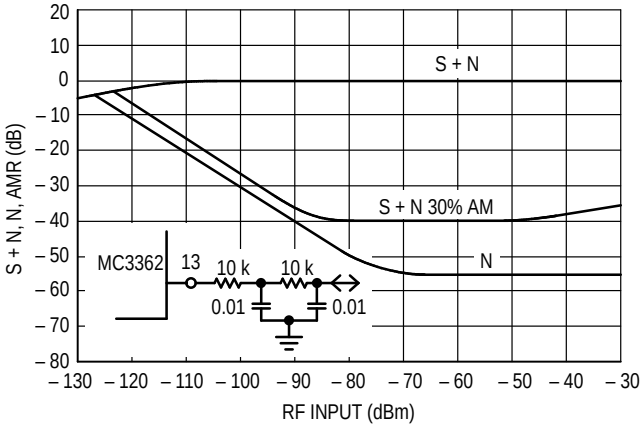

Figure 8. 1st Mixer 3rd Order Intermodulation

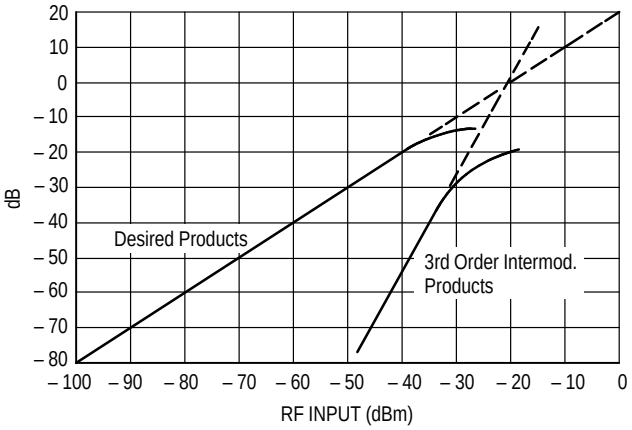

Figure 9. Detector Output versus Frequency

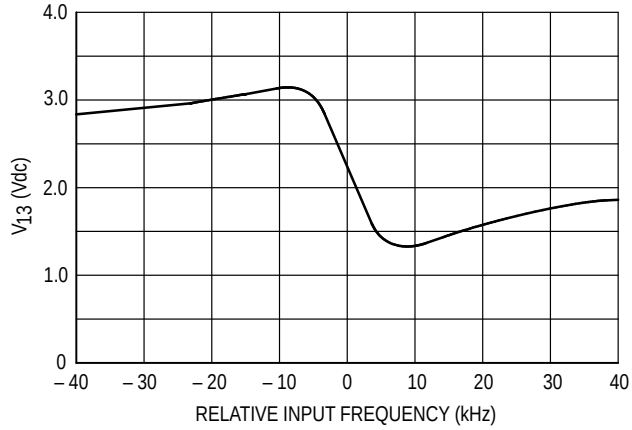

Figure 10. PC Board Test Circuit
(LC Oscillator Configuration Used in PLL Synthesized Receiver)

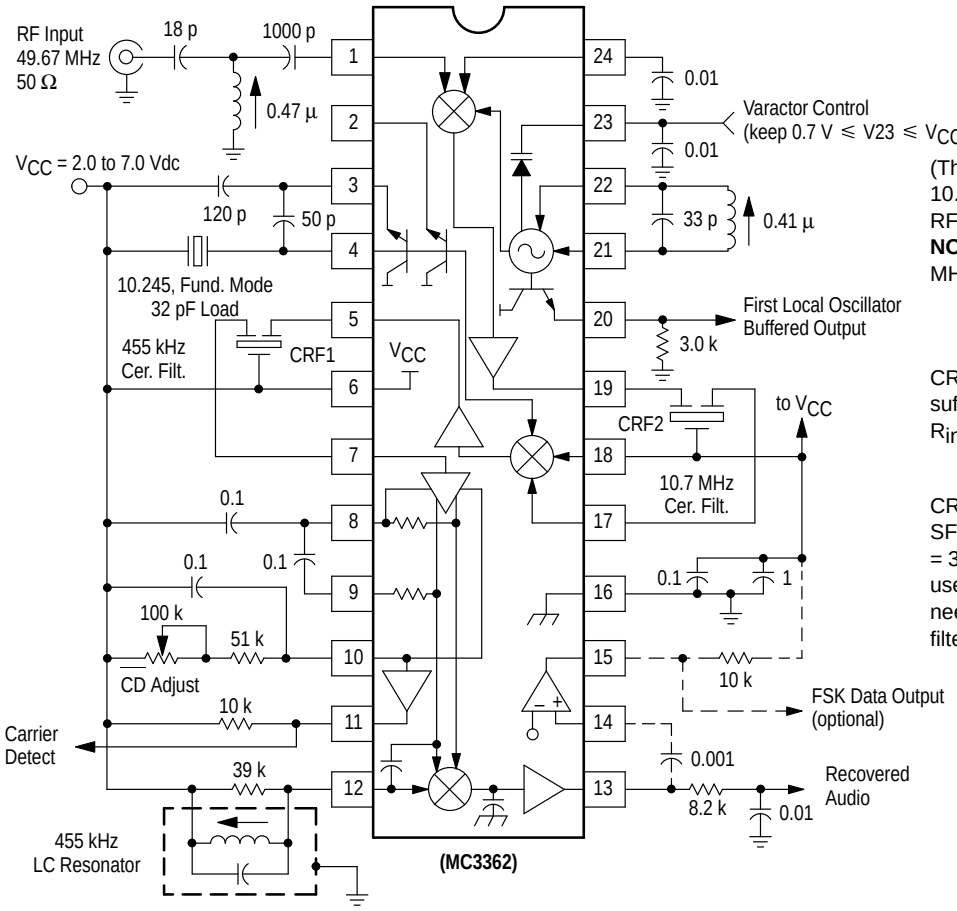

(This network must be tuned to exactly 10.7 MHz above or below the incoming RF signal.
NOTE: The IF is rolled off above 10.7 MHz to reduce L.O. feedthrough.)

CRF1 = muRata CFU 455X – the X suffix denotes 6.0 dB bandwidth. $R_{in} = R_{out}$ = 1.5 to 2.0 kΩ.

CRF2 = muRata SFA10.7 MF5 or SFE10.7 or equivalent. $R_{in} = R_{out}$ = 330 Ω. Crystal filters can be used but impedance matching will need to be added to ensure proper filter characteristics are realized.

Figure 10A. Crystal Oscillator Configuration for Single Channel Application

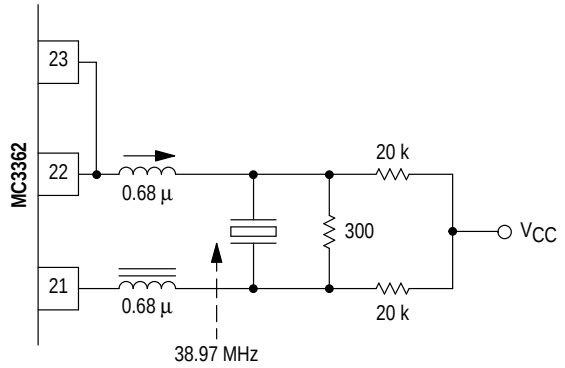

Crystal used is series mode resonant (no load capacity specified), 3rd overtone. This method has not proven adequate for fundamental mode, 5th or 7th overtone crystals. The inductor and capacitor will need to be changed for other frequency crystals. See AN980 for further information.

Figure 11. Component Placement View Showing Crystal Oscillator Circuit

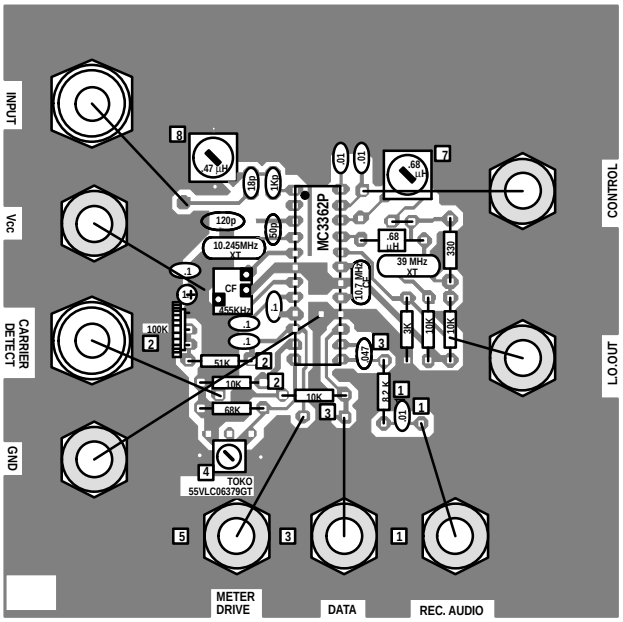

Figure 11A. LC Oscillator Component View

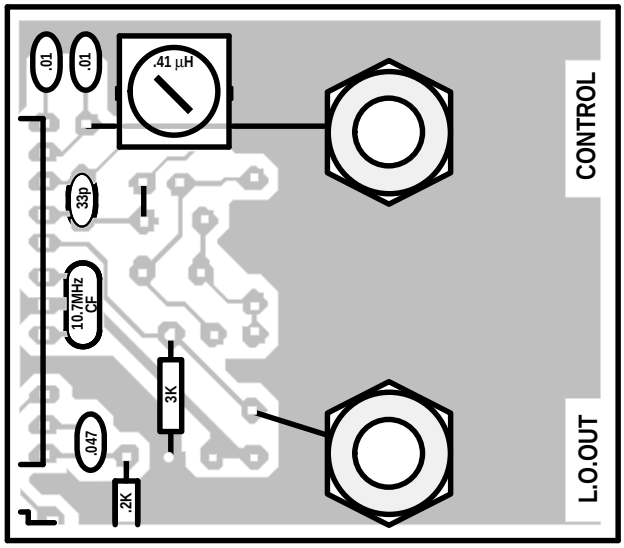

NOTES: 1. Recovered Audio components may be deleted when using data output.
2. Carrier Detect components must be deleted in order to obtain linear Meter Drive output. With these components in place the Meter Drive outputs serve only to trip the Carrier Detect indicator.
3. Data Output components should be deleted in applications where only audio modulation is used. For combined audio/data applications, the 0.047 µF coupling capacitor will add distortion to the audio, so a pull–down resistor at pin 13 may be required.
4. Use Toko 7MC81282 Quadrature coil.
5. Meter Drive cannot be used simultaneously with Carrier Detect output. For analog meter drive, remove components labelled ″2″ and measure meter current (4–12 µA) through ammeter to V_{CC}.
6. Either type of oscillator circuit may be used with any output circuit configuration.
7. LC Oscillator Coil: Coilcraft UNI 10/42 10.5 turns, 0.41 µH Crystal Oscillator circuit: trim coil, 0.68 µH. Coilcraft M1287–A.
8. 0.47 H, Coilcraft M1286–A. Input LC network used to match first mixer input impedance to 50 Ω.

CIRCUIT DESCRIPTION

The MC3362 is a complete FM narrowband receiver from antenna input to audio preamp output. The low voltage dual conversion design yields low power drain, excellent sensitivity and good image rejection in narrowband voice and data link applications.

In the typical application (Figure 1), the first mixer amplifies the signal and converts the RF input to 10.7 MHz. This IF signal is filtered externally and fed into the second mixer, which further amplifies the signal and converts it to a 455 kHz IF signal. After external bandpass filtering, the low IF is fed into the limiting amplifier and detection circuitry. The audio is recovered using a conventional quadrature detector. Twice–IF filtering is provided internally.

The input signal level is monitored by meter drive circuitry which detects the amount of limiting in the limiting amplifier. The voltage at the meter drive pin determines the state of the carrier detect output, which is active low.

APPLICATIONS INFORMATION

The first local oscillator can be run using a free–running LC tank, as a VCO using PLL synthesis, or driven from an external crystal oscillator. It has been run to 190 MHz.* A buffered output is available at Pin 20. The second local oscillator is a common base Colpitts type which is typically run at 10.245 MHz under crystal control. A buffered output is available at Pin 2. Pins 2 and 3 are interchangeable.

The mixers are doubly balanced to reduce spurious responses. The first and second mixers have conversion gains of 18 dB and 22 dB (typical), respectively, as seen in Figure 6. Mixer gain is stable with respect to supply voltage. For both conversions, the mixer impedances and pin layout are designed to allow the user to employ low cost, readily available ceramic filters. Overall sensitivity and AM rejection are shown in Figure 7. The input level for 20 dB (S + N)/N is 0.7 µV using the two–pole post–detection filter pictured.

* If the first local oscillator (Pins 21 and/or 22) is driven from a strong external source (100 mVrms), the mixer can be used to over 450 MHz.

Following the first mixer, a 10.7 MHz ceramic band–pass filter is recommended. The 10.7 MHz filtered signal is then fed into one second mixer input pin, the other input pin being connected to V_{CC}. Pin 6 (V_{CC}) is treated as a common point for emitter–driven signals.

The 455 kHz IF is typically filtered using a ceramic bandpass filter then fed into the limiter input pin. The limiter has 10 μV sensitivity for – 3.0 dB limiting, flat to 1.0 MHz.

The output of the limiter is internally connected to the quadrature detector, including a quadrature capacitor. A parallel LC tank is needed externally from Pin 12 to V_{CC}. A 39 kΩ shunt resistance is included which determines the peak separation of the quadrature detector; a smaller value will increase the spacing and linearity but decrease recovered audio and sensitivity.

A data shaping circuit is available and can be coupled to the recovered audio output of Pin 13. The circuit is a comparator which is designed to detect zero crossings of FSK modulation. Data rates are typically limited to 1200 baud to ensure data integrity and avoid adjacent channel “splatter.” Hysteresis is available by connecting a high valued resistor from Pin 15 to Pin 14. Values below 120 kΩ are not recommended as the input signal cannot overcome the hysteresis.

The meter drive circuitry detects input signal level by monitoring the limiting amplifier stages. Figure 4 shows the unloaded current at Pin 10 versus input power. The meter drive current can be used directly (RSSI) or can be used to trip the carrier detect circuit at a specified input power. To do this, pick an RF trip level in dBm. Read the corresponding current from Figure 4 and pick a resistor such that:

$$R_{10} \simeq 0.64\ \text{Vdc} / I_{10}$$

Hysteresis is available by connecting a high valued resistor R_H between Pins 10 and 11. The formula is:

$$\text{Hysteresis} = V_{CC}/(R_H \times 10^{-7})\ \text{dB}$$

Figure 12. Circuit Side View

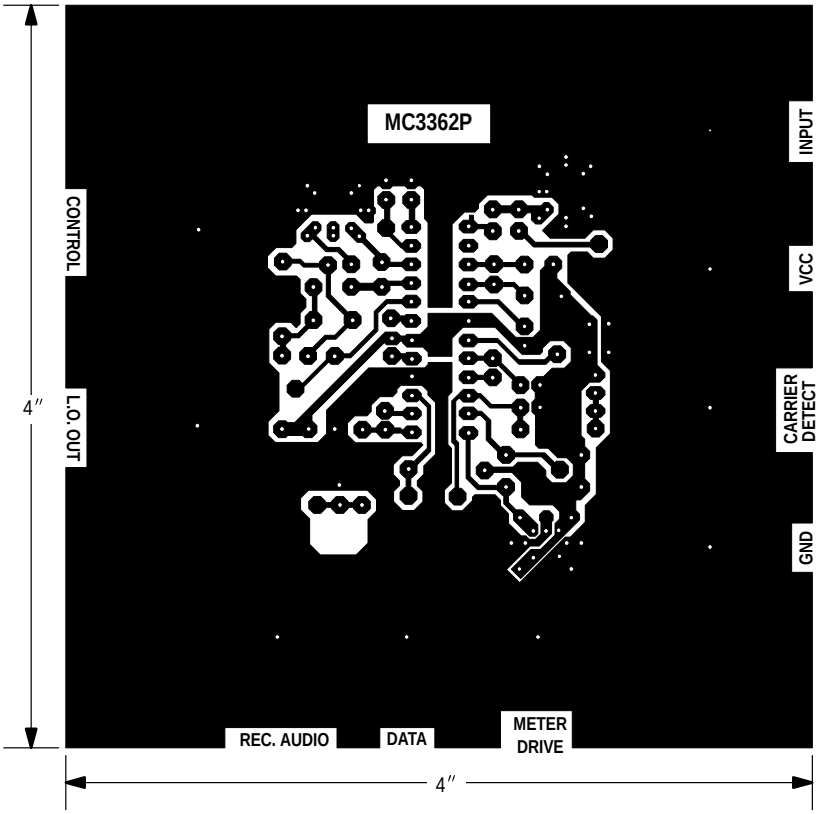

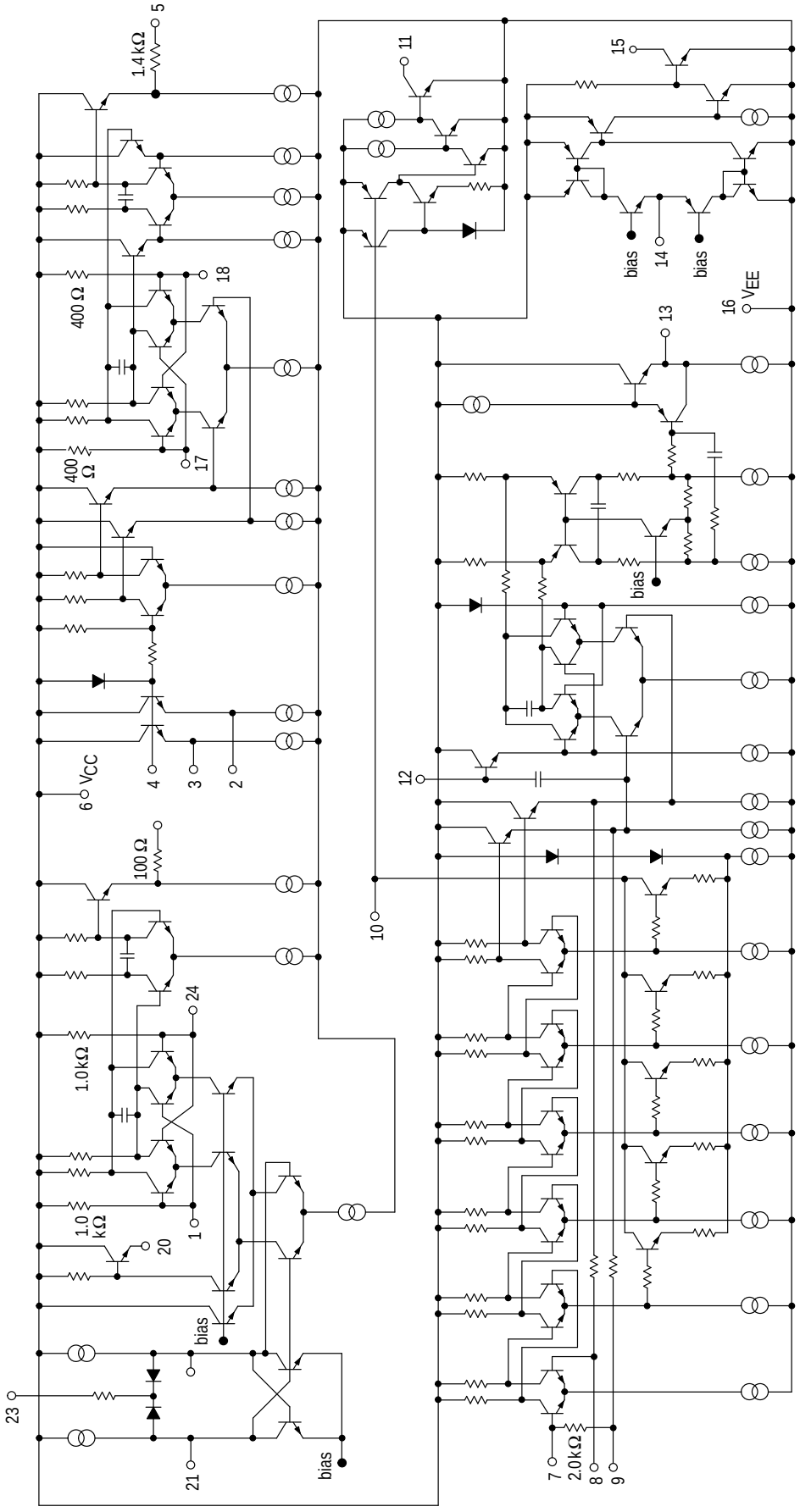

Figure 13. Representative Schematic Diagram

OUTLINE DIMENSIONS

P SUFFIX
PLASTIC PACKAGE
CASE 724–03
ISSUE D

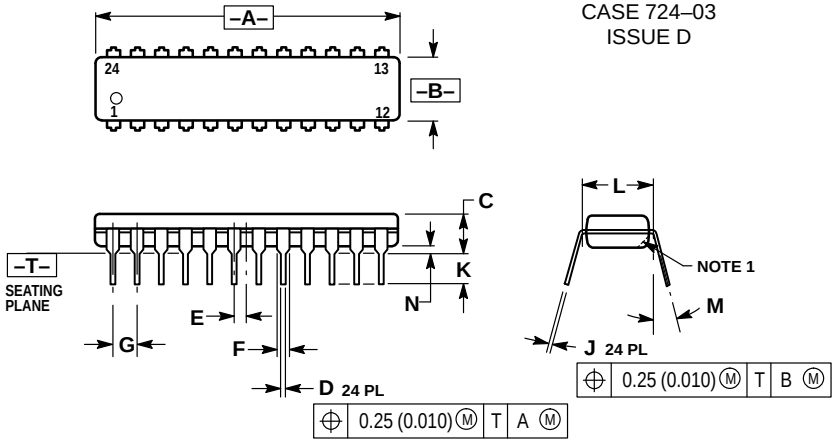

NOTES:
1. CHAMFERED CONTOUR OPTIONAL.
2. DIMENSION L TO CENTER OF LEADS WHEN FORMED PARALLEL.
3. DIMENSIONING AND TOLERANCING PER ANSI Y14.5M, 1982.
4. CONTROLLING DIMENSION: INCH.

	INCHES		MILLIMETERS	
DIM	MIN	MAX	MIN	MAX
A	1.230	1.265	31.25	32.13
B	0.250	0.270	6.35	6.85
C	0.145	0.175	3.69	4.44
D	0.015	0.020	0.38	0.51
E	0.050 BSC		1.27 BSC	
F	0.040	0.060	1.02	1.52
G	0.100 BSC		2.54 BSC	
J	0.007	0.012	0.18	0.30
K	0.110	0.140	2.80	3.55
L	0.300 BSC		7.62 BSC	
M	0 °	15 °	0 °	15 °
N	0.020	0.040	0.51	1.01

DW SUFFIX
PLASTIC PACKAGE
CASE 751E–04
(SO-24L)
ISSUE E

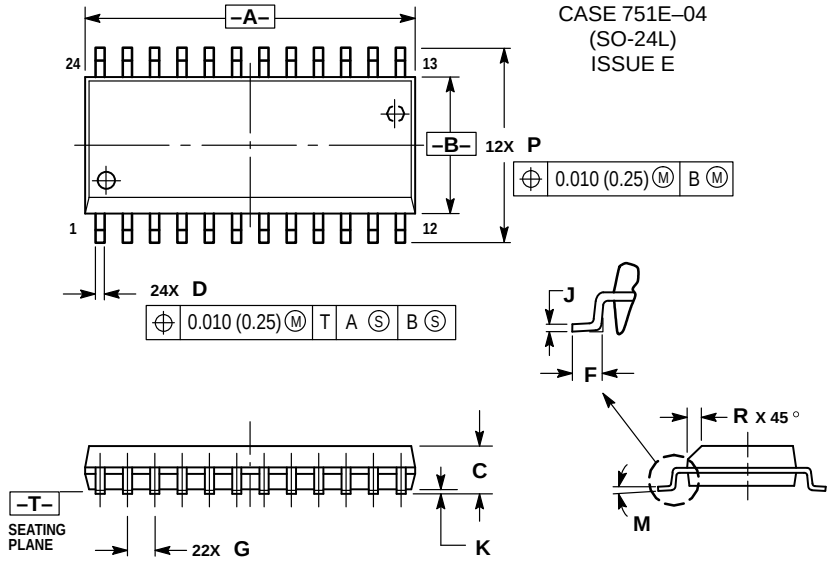

NOTES:
1. DIMENSIONING AND TOLERANCING PER ANSI Y14.5M, 1982.
2. CONTROLLING DIMENSION: MILLIMETER.
3. DIMENSIONS A AND B DO NOT INCLUDE MOLD PROTRUSION.
4. MAXIMUM MOLD PROTRUSION 0.15 (0.006) PER SIDE.
5. DIMENSION D DOES NOT INCLUDE DAMBAR PROTRUSION. ALLOWABLE DAMBAR PROTRUSION SHALL BE 0.13 (0.005) TOTAL IN EXCESS OF D DIMENSION AT MAXIMUM MATERIAL CONDITION.

	MILLIMETERS		INCHES	
DIM	MIN	MAX	MIN	MAX
A	15.25	15.54	0.601	0.612
B	7.40	7.60	0.292	0.299
C	2.35	2.65	0.093	0.104
D	0.35	0.49	0.014	0.019
F	0.41	0.90	0.016	0.035
G	1.27 BSC		0.050 BSC	
J	0.23	0.32	0.009	0.013
K	0.13	0.29	0.005	0.011
M	0 °	8 °	0 °	8 °
P	10.05	10.55	0.395	0.415
R	0.25	0.75	0.010	0.029

Motorola reserves the right to make changes without further notice to any products herein. Motorola makes no warranty, representation or guarantee regarding the suitability of its products for any particular purpose, nor does Motorola assume any liability arising out of the application or use of any product or circuit, and specifically disclaims any and all liability, including without limitation consequential or incidental damages. “Typical” parameters which may be provided in Motorola data sheets and/or specifications can and do vary in different applications and actual performance may vary over time. All operating parameters, including “Typicals” must be validated for each customer application by customer’s technical experts. Motorola does not convey any license under its patent rights nor the rights of others. Motorola products are not designed, intended, or authorized for use as components in systems intended for surgical implant into the body, or other applications intended to support or sustain life, or for any other application in which the failure of the Motorola product could create a situation where personal injury or death may occur. Should Buyer purchase or use Motorola products for any such unintended or unauthorized application, Buyer shall indemnify and hold Motorola and its officers, employees, subsidiaries, affiliates, and distributors harmless against all claims, costs, damages, and expenses, and reasonable attorney fees arising out of, directly or indirectly, any claim of personal injury or death associated with such unintended or unauthorized use, even if such claim alleges that Motorola was negligent regarding the design or manufacture of the part. Motorola and M are registered trademarks of Motorola, Inc. Motorola, Inc. is an Equal Opportunity/Affirmative Action Employer.

Mfax is a trademark of Motorola, Inc.

How to reach us:
USA / EUROPE / Locations Not Listed: Motorola Literature Distribution;
P.O. Box 5405, Denver, Colorado 80217. 303–675–2140 or 1–800–441–2447

Mfax™: RMFAX0@email.sps.mot.com – TOUCHTONE 602–244–6609
– US & Canada ONLY 1–800–774–1848

INTERNET: http://motorola.com/sps

JAPAN: Nippon Motorola Ltd.: SPD, Strategic Planning Office, 4–32–1,
Nishi–Gotanda, Shinagawa–ku, Tokyo 141, Japan. 81–3–5487–8488

ASIA / PACIFIC: Motorola Semiconductors H.K. Ltd.; 8B Tai Ping Industrial Park,
51 Ting Kok Road, Tai Po, N.T., Hong Kong. 852–26629298