Document Number: MC33290
Rev 8.0, 8/2008

ISO K Line Serial Link Interface

33290

ISO9141 PHYSICAL INTERFACE



D SUFFIX
EF SUFFIX (PB-FREE)
98ASB42564B
8-PIN SOICN

The 33290 is a serial link bus interface device designed to provide bi-directional half-duplex communication interfacing in automotive diagnostic applications. It is designed to interface between the vehicle's on-board microcontroller and systems off-board the vehicle via the special ISO K line. The 33290 is designed to meet the Diagnostic Systems ISO9141 specification. The device's K line bus driver's output is fully protected against bus shorts and overtemperature conditions.

The 33290 derives its robustness to temperature and voltage extremes by being built on a SMARTMOS process, incorporating CMOS logic, bipolar/MOS analog circuitry, and DMOS power FETs. Although the 33290 was principally designed for automotive applications, it is suited for other serial communication applications. It is parametrically specified over an ambient temperature range of -40ºC ≤ T_A ≤ 125ºC and 8.0 V ≤ V_{BB} ≤ 18 V supply. The economical SO-8 surface-mount plastic package makes the 33290 very cost effective.

ORDERING INFORMATION		
Device	**Temperature Range (T_A)**	**Package**
MC33290D/R2	-40 to 125°C	8-SOICN
MCZ33290EF/R2		

Features

- Operates Over Wide Supply Voltage of 8.0 to 18V
- Operating Temperature of -40 to 125°C
- Interfaces Directly to Standard CMOS Microprocessors
- ISO K Line Pin Protected Against Shorts to Ground
- Thermal Shutdown with Hysteresis
- ISO K Line Pin Capable of High Currents
- ISO K Line Can Be Driven with up to 10 nF of Parasitic Capacitance
- 8.0 kV ESD Protection Attainable with Few Additional Components
- Standby Mode: No V_{Bat} Current Drain with V_{DD} at 5.0 V
- Low Current Drain During Operation with V_{DD} at 5.0 V
- Pb-Free Packaging Designated by Suffix Code EF

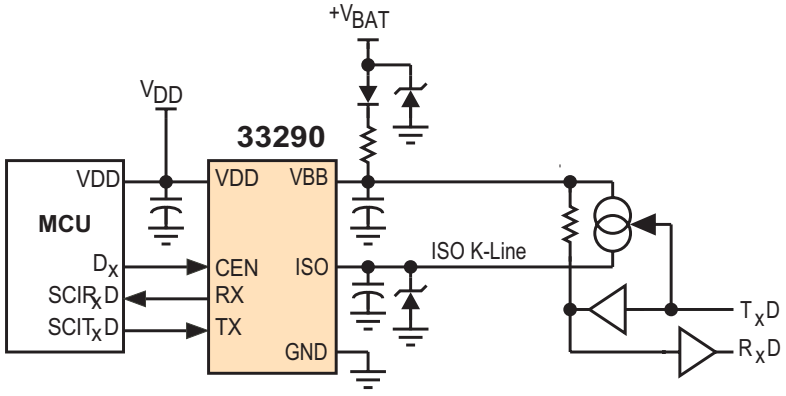

Figure 1. 33290 Simplified Application Diagram

Freescale Semiconductor, Inc. reserves the right to change the detail specifications, as may be required, to permit improvements in the design of its products.

© Freescale Semiconductor, Inc., 2006-2008. All rights reserved.

INTERNAL BLOCK DIAGRAM

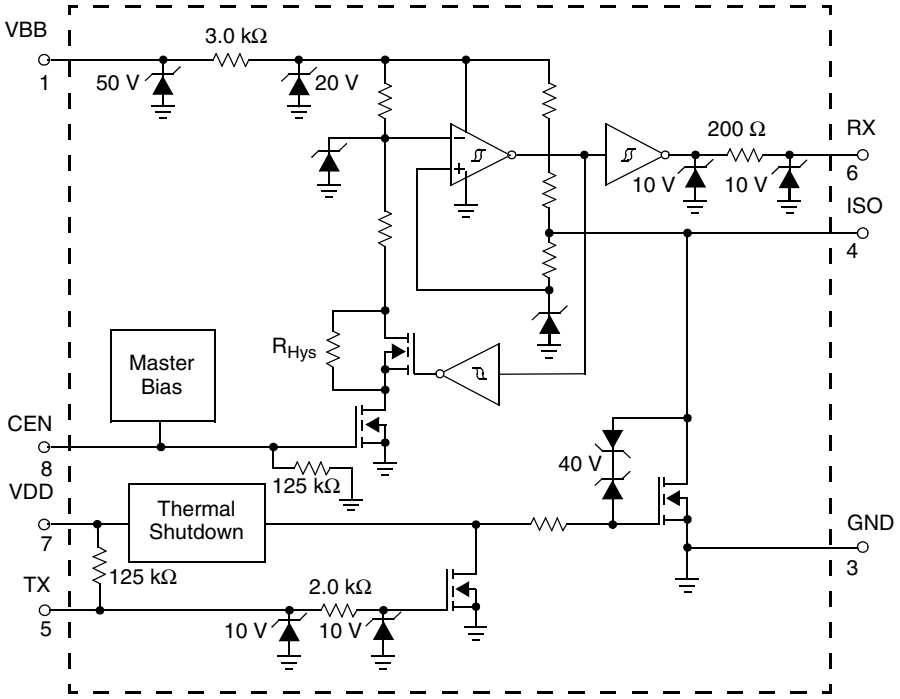

Figure 2. 33290 Simplified Block Diagram

PIN CONNECTIONS

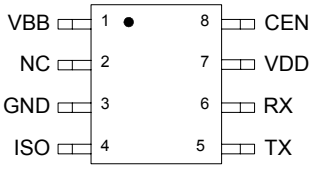

Figure 3. 33290 Pin Connections

Table 1. 33290 Pin Definitions

Pin Number	Pin Name	Definition
1	VBB	Battery power through external resistor and diode.
2	NC	Not to be connected. (1)
3	GND	Common signal and power return.
4	ISO	Bus connection.
5	TX	Logic level input for data to be transmitted on the bus.
6	RX	Logic output of data received on the bus.
7	VDD	Logic power source input.
8	CEN	Chip enable. Logic “1” for active state. Logic “0” for sleep state.

Notes

1. NC pins should not have any connections made to them. NC pins are not guaranteed to be open circuits.

ELECTRICAL CHARACTERISTICS

MAXIMUM RATINGS

Table 2. Maximum Ratings

All voltages are with respect to ground unless otherwise noted. Exceeding these ratings may cause a malfunction or permanent damage to the device.

Rating	Symbol	Value	Unit
VDD DC Supply Voltage	V_{DD}	-0.3 to 7.0	V
VBB Load Dump Peak Voltage	$V_{BB(LD)}$	45	V
ISO Pin Load Dump Peak Voltage (2)	V_{ISO}	40	V
ISO Short Circuit Current Limit	$I_{ISO(LIM)}$	1.0	A
ESD Voltage (3) Human Body Model (4) Machine Model (4)	 V_{ESD1} V_{ESD2}	 ±2000 ±200	V
ISO Clamp Energy (5)	E_{clamp}	10	mJ
Storage Temperature	T_{stg}	-55 to +150	°C
Operating Case Temperature	T_C	-40 to +125	°C
Operating Junction Temperature	T_J	-40 to +150	°C
Power Dissipation T_A = 25°C	P_D	 0.8	W
Peak Package Reflow Temperature During Reflow (6), (7)	T_{PPRT}	Note 7.	°C
Thermal Resistance Junction-to-Ambient	$R_{\theta JA}$	 150	°C/W

Notes

2. Device will survive double battery jump start conditions in typical applications for 10 minutes duration, but is not guaranteed to remain within specified parametric limits during this duration.
3. ESD data available upon request.
4. ESD1 testing is performed in accordance with the Human Body Model (C_{ZAP} = 100 pF, R_{ZAP} = 1500 Ω), ESD2 testing is performed in accordance with the Machine Model (C_{ZAP} = 200 pF, R_{ZAP} = 0 Ω).
5. Nonrepetitive clamping capability at 25°C.
6. Pin soldering temperature limit is for 10 seconds maximum duration. Not designed for immersion soldering. Exceeding these limits may cause malfunction or permanent damage to the device.
7. Freescale's Package Reflow capability meets Pb-free requirements for JEDEC standard J-STD-020C. For Peak Package Reflow Temperature and Moisture Sensitivity Levels (MSL),
Go to www.freescale.com, search by part number [e.g. remove prefixes/suffixes and enter the core ID to view all orderable parts. (i.e. MC33xxxD enter 33xxx), and review parametrics.

STATIC ELECTRICAL CHARACTERISTICS

Table 3. Static Electrical Characteristics

Characteristics noted under conditions of 4.75 V ≤ V_{DD} ≤ 5.25 V, 8.0 V ≤ V_{BB} ≤ 18 V, -40°C ≤ T_C ≤ 125°C, unless otherwise noted.

Characteristic	Symbol	Min	Typ	Max	Unit
POWER AND CONTROL					
V_{DD} Sleep State Current T_x = 0.8 V_{DD}, CEN = 0.3 V_{DD}	$I_{DD(SS)}$	–	–	0.1	mA
V_{DD} Quiescent Operating Current T_x = 0.2 V_{DD}, CEN = 0.7 V_{DD}	$I_{DD(Q)}$	–	–	1.0	mA
V_{BB} Sleep State Current V_{BB} = 16 V, T_x = 0.8 V_{DD}, CEN = 0.3 V_{DD}	$I_{BB(SS)}$	–	–	50	µA
V_{BB} Quiescent Operating Current T_X = 0.2 V_{DD}, CEN = 0.7 V_{DD}	$I_{BB(Q)}$	–	–	1.0	mA
Chip Enable Input High-Voltage Threshold (8) Input Low-Voltage Threshold (9)	 $V_{IH(CEN)}$ $V_{IL(CEN)}$	 0.7 V_{DD} –	 – –	 – 0.3 V_{DD}	V
Chip Enable Pull-Down Current (10)	$I_{PD(CEN)}$	2.0	–	40	µA
T_X Input Low-Voltage Threshold R_{ISO} = 510 Ω (11)	$V_{IL(Tx)}$	–	–	0.3 x V_{DD}	V
T_X Input High-Voltage Threshold R_{ISO} = 510 Ω (12)	$V_{IH(Tx)}$	0.7 x V_{DD}	–	–	V
T_X Pull-Up Current (13)	$I_{PU(Tx)}$	-40	–	-2.0	µA
R_X Output Low-Voltage Threshold R_{ISO} = 510 Ω, T_X = 0.2 V_{DD}, R_x Sinking 1.0 mA	$V_{OL(Rx)}$	–	–	0.2 V_{DD}	V
R_X Output High-Voltage Threshold R_{ISO} = 510 Ω, T_X = 0.8 V_{DD}, R_X Sourcing 250 µA	$V_{OH(Rx)}$	0.8 V_{DD}	–	–	V
Thermal Shutdown (14)	T_{LIM}	150	170	–	°C

Notes

8. When IBB transitions to >100 µA.
9. When IBB transitions to <100 µA.
10. Enable pin has an internal current pull-down. Pull-down current is measured with CEN pin at 0.3 V_{DD}.
11. Measured by ramping T_X down from 0.7 V_{DD} and noting T_X value at which ISO falls below 0.2 V_{BB}.
12. Measured by ramping T_X up from 0.3 V_{DD} and noting the value at which ISO rises above 0.9 V_{BB}.
13. T_x pin has internal current pull-up. Pull-up current is measured with T_X pin at 0.7 V_{DD}.
14. Thermal Shutdown performance (T_{LIM}) is guaranteed by design but not production tested.

Table 3. Static Electrical Characteristics (Continued)

Characteristics noted under conditions of 4.75 V ≤ V_{DD} ≤ 5.25 V, 8.0 V ≤ V_{BB} ≤ 18 V, -40°C ≤ T_C ≤ 125°C, unless otherwise noted.

Characteristic	Symbol	Min	Typ	Max	Unit
ISO I/O					
Input Low Voltage Threshold R_{ISO} = 0 Ω, T_X = 0.8 V_{DD} (15)	$V_{IL(ISO)}$	–	–	0.4 x V_{BB}	V
Input High Voltage Threshold R_{ISO} = 0 Ω, T_X = 0.8 V_{DD} (16)	$V_{IH(ISO)}$	0.7 x V_{BB}	–	–	V
Input Hysteresis (17)	$V_{Hys(ISO)}$	0.05 x V_{BB}	–	0.1 x V_{BB}	V
Internal Pull-Up Current R_{ISO} = ∞ Ω, T_X = 0.8 V_{DD}, V_{ISO} = 9.0 V, V_{BB} = 18 V	$I_{PU(ISO)}$	-5.0	–	-140	µA
Short Circuit Current Limit (18) R_{ISO} = 0 Ω, T_X = 0.4 V_{DD}, V_{ISO} = V_{BB}	$I_{SC(ISO)}$	50	–	1000	mA
Output Low Voltage R_{ISO} = 510 Ω, T_X = 0.2 V_{DD}	$V_{OL(ISO)}$	–	–	0.1 x V_{BB}	V
Output High Voltage R_{ISO} = ∞ Ω, T_X = 0.8 V_{DD}	$V_{OH(ISO)}$	0.95 x V_{BB}	–	–	V

Notes

15. ISO ramped from 0.8 V_{BB} to 0.4 V_{BB}, Monitor R_X, Value of ISO voltage at which R_X transitions to 0.3 V_{DD}.
16. ISO ramped from 0.4 V_{BB} to 0.8 V_{BB}, Monitor R_X, Value of ISO voltage at which R_X transitions to 0.7 V_{DD}.
17. Input Hysteresis, $V_{Hys(ISO)}$ = $V_{IH(ISO)}$ - $V_{IL(ISO)}$.
18. ISO has internal current limiting.

DYNAMIC ELECTRICAL CHARACTERISTICS

Table 4. Dynamic Electrical Characteristics

Characteristics noted under conditions of 4.75 V ≤ V_{DD} ≤ 5.25 V, 8.0 V ≤ V_{BB} ≤ 18 V, -40°C ≤ T_C ≤ 125°C, unless otherwise noted.

Characteristic	Symbol	Min	Typ	Max	Unit
Fall Time (19) R_{ISO} = 510 Ω to V_{BB}, C_{ISO} = 10 nF to Ground	$t_{fall(ISO)}$	–	–	2.0	µs
ISO Propagation Delay (20)	$t_{PD(ISO)}$				µs
High to Low: R_{ISO} = 510 Ω, C_{ISO} = 500 pF (21)		–	–	2.0	
Low to High: R_{ISO} = 510 Ω, C_{ISO} = 500 pF (22)		–	–	2.0	

Notes

19. Time required ISO voltage to transition from 0.8 V_{BB} to 0.2 V_{BB}.
20. Changes in the value of C_{ISO} affect the rise and fall time but have minimal effect on Propagation Delay.
21. Step T_X voltage from 0.2 V_{DD} to 0.8 V_{DD}. Time measured from $V_{IH(ISO)}$ until V_{ISO} reaches 0.3 V_{BB}.
22. Step T_X voltage from 0.8 V_{DD} to 0.2 V_{DD}. Time measured from $V_{IL(ISO)}$ until V_{ISO} reaches 0.7 V_{BB}.

ELECTRICAL PERFORMANCE CURVES

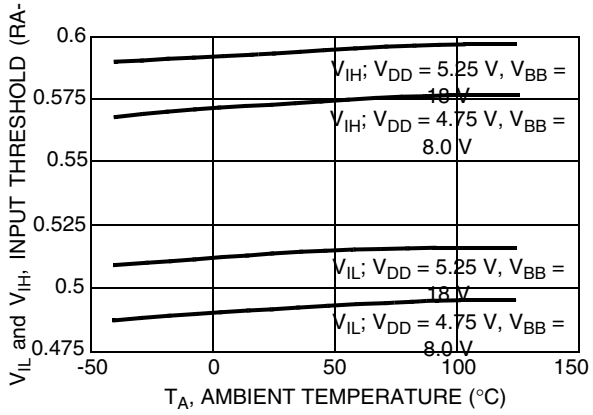

Figure 4. ISO Input Threshold/V_{BB} vs. Temperature

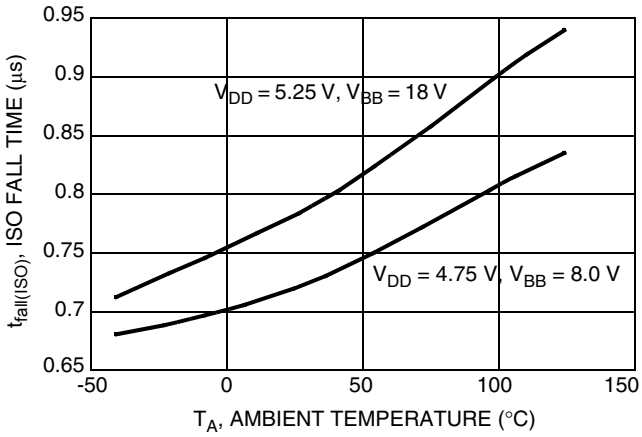

Figure 5. ISO Output/V_{BB} vs. Temperature

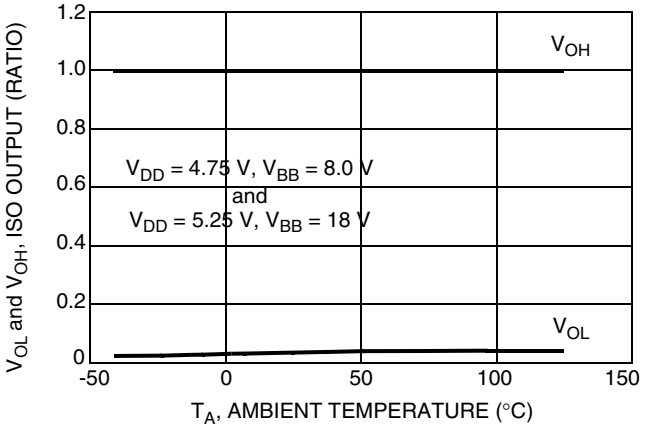

Figure 6. ISO Fall Time vs. Temperature

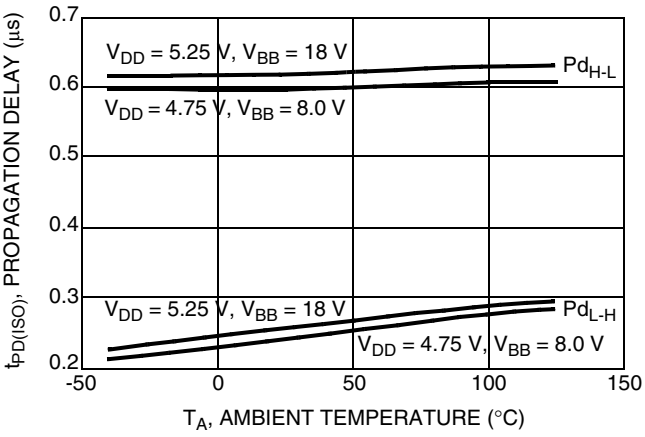

Figure 7. ISO Propagation Delay vs. Temperature

TYPICAL APPLICATIONS

INTRODUCTION

The 33290 is a serial link bus interface device conforming to the ISO 9141 physical bus specification. The device was designed for automotive environment usage compliant with On-Board Diagnostic (OBD) requirements set forth by the California Air Resources Board (CARB) using the ISO K line. The device does not incorporate an ISO L line. It provides bi-directional half-duplex communications interfacing from a microcontroller to the communication bus. The 33290 incorporates circuitry to interface the digital translations from 5.0 V microcontroller logic levels to battery level logic and from battery level logic to 5.0 V logic levels. The 33290 is built using Freescale Semiconductor's SMARTMOS process and is packaged in an 8-pin plastic SOIC.

FUNCTIONAL DESCRIPTION

The 33290 transforms 5.0 V microcontroller logic signals to battery level logic signals and visa versa. The maximum data rate is set by the fall time and the rise time. The fall time is set by the output driver. The rise time is set by the bus capacitance and the pull-up resistors on the bus. The fall time of the 33290 allows data rates up to 150 kbps using a 30 percent maximum bit time transition value. The serial link interface will remain fully functional over a battery voltage range of 6.0 to 18 V. The device is parametrically specified over a dynamic V_{BB} voltage range of 8.0 to 18 V.

Required input levels from the microcontroller are ratio-metric with the V_{DD} voltage normally used to power the microcontroller. This enhances the 33290's ability to remain in harmony with the R_X and T_X control input signals of the microcontroller. The R_X and T_X control inputs are compatible with standard 5.0 V CMOS circuitry. For fault-tolerant purposes the T_X input from the microcontroller has an internal passive pull-up to V_{DD}, while the CEN input has an internal passive pull-down to ground.

A pull-up to battery is internally provided as well as an active data pull-down. The internal active pull-down is current-limit-protected against shorts to battery and further protected by thermal shutdown. Typical applications have reverse battery protection by the incorporation of an external 510 Ω pull-up resistor and diode to battery.

Reverse battery protection of the device is provided by using a reverse battery blocking diode ("D" in the Simplified Application Diagram on page 1). Battery line transient protection of the device is provided for by using a 45 V zener and a 500 Ω resistor connected to the V_{BB} source as shown in the same diagram. Device ESD protection from the communication lines exiting the module is through the use of the capacitor connected to the V_{BB} device pin and the capacitor used in conjunction with the 27 V zener connected to the ISO pin.

PACKAGING

PACKAGE DIMENSIONS

For the most current package revision, visit **www.freescale.com** and perform a keyword search using the “98A” listed below.

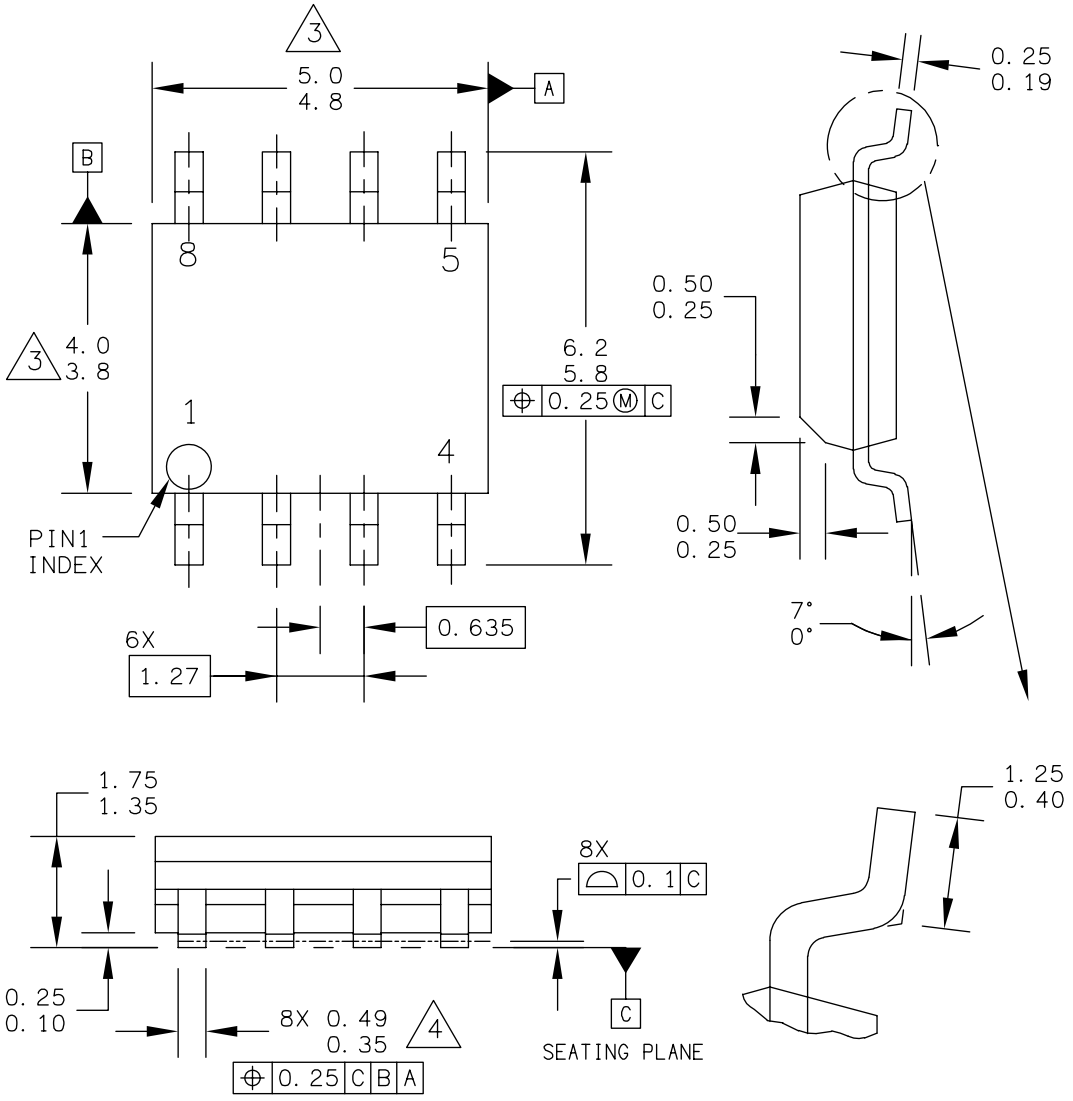

© FREESCALE SEMICONDUCTOR, INC. ALL RIGHTS RESERVED.	MECHANICAL OUTLINE	PRINT VERSION NOT TO SCALE
TITLE: 8LD SOIC NARROW BODY	DOCUMENT NO: 98ASB42564B	REV: U
	CASE NUMBER: 751-07	07 APR 2005
	STANDARD: JEDEC MS-012AA	

D SUFFIX
EF SUFFIX (PB-FREE)
8-PIN
PLASTIC PACKAGE
98ASB42564B
REV. U

33290

REVISION HISTORY

REVISION	DATE	DESCRIPTION OF CHANGES
6.0	7/2006	• Implemented Revision History page • Converted to Freescale format and updated to the prevailing for and style • Added Pb-free suffix EF • Removed MC33290EG/R2 and replaced with MCZ33290EG/R2 in the Ordering Information block
7.0	10/2006	• Removed Peak Package Reflow Temperature During Reflow (solder reflow) parameter from Maximum Ratings on page 4. Added note with instructions to obtain this information from www.freescale.com.
8.0	8/2008	• Corrected the Document header information. • Updated to the current Freescale form and style.

How to Reach Us:

Home Page:
www.freescale.com

Web Support:
http://www.freescale.com/support

USA/Europe or Locations Not Listed:
Freescale Semiconductor, Inc.
Technical Information Center, EL516
2100 East Elliot Road
Tempe, Arizona 85284
+1-800-521-6274 or +1-480-768-2130
www.freescale.com/support

Europe, Middle East, and Africa:
Freescale Halbleiter Deutschland GmbH
Technical Information Center
Schatzbogen 7
81829 Muenchen, Germany
+44 1296 380 456 (English)
+46 8 52200080 (English)
+49 89 92103 559 (German)
+33 1 69 35 48 48 (French)
www.freescale.com/support

Japan:
Freescale Semiconductor Japan Ltd.
Headquarters
ARCO Tower 15F
1-8-1, Shimo-Meguro, Meguro-ku,
Tokyo 153-0064
Japan
0120 191014 or +81 3 5437 9125
support.japan@freescale.com

Asia/Pacific:
Freescale Semiconductor China Ltd.
Exchange Building 23F
No. 118 Jianguo Road
Chaoyang District
Beijing 100022
China
+86 10 5879 8000
support.asia@freescale.com

For Literature Requests Only:
Freescale Semiconductor Literature Distribution Center
P.O. Box 5405
Denver, Colorado 80217
1-800-441-2447 or 303-675-2140
Fax: 303-675-2150
LDCForFreescaleSemiconductor@hibbertgroup.com

RoHS-compliant and/or Pb-free versions of Freescale products have the functionality and electrical characteristics of their non-RoHS-compliant and/or non-Pb-free counterparts. For further information, see http://www.freescale.com or contact your Freescale sales representative.

For information on Freescale's Environmental Products program, go to http://www.freescale.com/epp.

Information in this document is provided solely to enable system and software implementers to use Freescale Semiconductor products. There are no express or implied copyright licenses granted hereunder to design or fabricate any integrated circuits or integrated circuits based on the information in this document.

Freescale Semiconductor reserves the right to make changes without further notice to any products herein. Freescale Semiconductor makes no warranty, representation or guarantee regarding the suitability of its products for any particular purpose, nor does Freescale Semiconductor assume any liability arising out of the application or use of any product or circuit, and specifically disclaims any and all liability, including without limitation consequential or incidental damages. "Typical" parameters that may be provided in Freescale Semiconductor data sheets and/or specifications can and do vary in different applications and actual performance may vary over time. All operating parameters, including "Typicals", must be validated for each customer application by customer's technical experts. Freescale Semiconductor does not convey any license under its patent rights nor the rights of others. Freescale Semiconductor products are not designed, intended, or authorized for use as components in systems intended for surgical implant into the body, or other applications intended to support or sustain life, or for any other application in which the failure of the Freescale Semiconductor product could create a situation where personal injury or death may occur. Should Buyer purchase or use Freescale Semiconductor products for any such unintended or unauthorized application, Buyer shall indemnify and hold Freescale Semiconductor and its officers, employees, subsidiaries, affiliates, and distributors harmless against all claims, costs, damages, and expenses, and reasonable attorney fees arising out of, directly or indirectly, any claim of personal injury or death associated with such unintended or unauthorized use, even if such claim alleges that Freescale Semiconductor was negligent regarding the design or manufacture of the part.

Freescale™ and the Freescale logo are trademarks of Freescale Semiconductor, Inc. All other product or service names are the property of their respective owners.

© Freescale Semiconductor, Inc., 2006-2008. All rights reserved.

MC33290
Rev 8.0
8/2008

freescale™ semiconductor