MOTOROLA
SEMICONDUCTOR TECHNICAL DATA

Order this document
by MC145540/D

MC145540

Advance Information

MC145540 ADPCM Codec

This document contains information on a new product. Specifications and information herein are subject to change without notice.

REV 0

© Motorola, Inc. 1997

This page intentionally left blank.

TABLE OF CONTENTS

SECTION 1
GENERAL DESCRIPTION

1.1 INTRODUCTION **1-1**

1.2 FEATURES **1-1**

SECTION 2
DEVICE DESCRIPTION

2.1 MC145540 ADPCM CODEC DEVICE DESCRIPTION **2-1**

2.1.1 PCM Codec-Filter Block Description 2-1

2.1.2 ADPCM Transcoder Block Description 2-3

2.1.3 Charge Pump 2-4

2.2 MC145540 FUNCTIONAL DESCRIPTION **2-4**

2.2.1 Power Supply Configuration 2-4

2.2.1.1 Analog Signal Processing Power Supply 2-4

2.2.1.2 Digital Signal Processing Power Supply 2-4

2.2.2 Analog Interface and Signal Path 2-5

2.2.2.1 Transmit Analog 2-5

2.2.2.2 Transmit Digital 2-5

2.2.2.3 Receive 2-6

2.2.2.3.1 Receive Digital 2-6

2.2.2.3.2 Receive Analog Signal Processing 2-6

2.2.2.3.3 Receive Analog Output Drivers and Power Supply 2-6

2.2.3 Sidetone 2-7

2.2.4 Universal Tone Generator 2-7

2.2.5 Power Down 2-7

2.2.6 Signal Processing Clock (SPC) 2-7

2.2.7 Digital I/O 2-8

2.2.7.1 Long Frame Sync 2-8

2.2.7.2 Short Frame Sync 2-9

2.3 PIN ASSIGNMENT **2-10**

2.4 PIN DESCRIPTIONS **2-11**

2.4.1 Power Supply Pins (V_{SS}, V_{EXT}, V_{DSP}, V_{DD}, V_{AG}, C1–, C1+) 2-11

2.4.2 Analog Interface Pins (TG, TI–, TI+, RO, AXO–, AXO+, PI, PO–, PO+) 2-12

2.4.3 ADPCM/PCM Serial Interface (FST, BCLKT, DT, SPC, DR, BCLKR, FSR) 2-13

2.4.4 Serial Control Port (SCP) Interface 2-15

2.4.4.1 Byte Register Operations ($\overline{PDI}$/$\overline{RESET}$, $\overline{SCP\ EN}$, SCP CLK, SCP Tx, SCP Rx) 2-15

SECTION 3
SERIAL CONTROL PORT REGISTERS

3.1 INTRODUCTION **3-1**
3.2 REGISTER MAP **3-1**
3.3 BIT DESCRIPTION LEGEND **3-1**
3.4 BYTE REGISTERS **3-3**
3.4.1 BR0 3-3
3.4.2 BR1 3-4
3.4.3 BR2 3-5
3.4.4 BR3 3-6
3.4.5 BR4 3-6
3.4.6 BR5 3-7
3.4.7 BR6 3-8
3.4.8 BR7 3-9
3.4.9 BR8 3-10
3.4.10 BR9 3-10
3.4.11 BR10 3-10
3.4.12 BR11 3-11
3.4.13 BR12 3-11
3.4.14 BR13 3-11
3.4.15 BR14 3-11
3.4.16 BR15 3-11

SECTION 4
ELECTRICAL SPECIFICATIONS

4.1 MAXIMUM RATINGS **4-1**
4.2 POWER SUPPLY **4-1**
4.3 DIGITAL LEVELS **4-2**
4.4 ANALOG ELECTRICAL CHARACTERISTICS **4-2**
4.5 POWER DRIVERS PI, PO+, PO–, AXO+, AXO– **4-3**
4.6 ANALOG ELECTRICAL CHARACTERISTICS **4-4**
4.7 POWER DRIVERS PI, PO+, PO–, AXO+, AXO– **4-5**
4.8 ANALOG TRANSMISSION PERFORMANCE **4-6**
4.9 DIGITAL SWITCHING CHARACTERISTICS, LONG FRAME SYNC AND SHORT FRAME SYNC **4-7**
4.10 DIGITAL SWITCHING CHARACTERISTICS — SERIAL CONTROL PORT (SCP) **4-10**

SECTION 5
PACKAGE DIMENSIONS

5.1 CASE OUTLINES 5-1

SECTION 6
APPLICATION CIRCUITS

6.1 SCHEMATIC DIAGRAMS 6-1

SECTION 7
PCB LAYOUT GUIDELINES

7.1 INTRODUCTION 7-1
7.2 PC BOARD MOUNTING 7-1
7.3 POWER SUPPLY, GROUND, AND NOISE CONSIDERATIONS 7-1

SECTION 8
PROGRAMMING THE MC145540 TONE GENERATORS

8.1 INTRODUCTION 8-1
8.1.1 Programing the Tone Generator 8-2
8.1.2 Tone Frequency Coefficient Calculation. 8-3
8.1.3 Tone Frequency Coefficient Calculation using Integer Mathematics for Decimal to Hexadecimal Conversion. 8-4
8.1.4 Tone Attenuation Coefficient Calculation 8-4

LIST OF FIGURES

Figure #	Title	Page #
2-1	MC145540 ADPCM Codec Block Diagram	2-2
2-2	Pin Assignments	2-10
2-3	Long Frame Sync — 64 kbps PCM Data Timing	2-14
2-4	Long Frame Sync — 32 kbps ADPCM Data Timing	2-14
2-5	Long Frame Sync — 24 kbps ADPCM Data Timing	2-14
2-6	Long Frame Sync — 16 kbps ADPCM Data Timing	2-15
2-7	Short Frame Sync — 32 kbps ADPCM Data Timing	2-15
2-8	SCP Byte Register Write Operation Using Double 8-Bit Transfer	2-16
2-9	SCP Byte Register Write Operation Using Single 16-Bit Transfer	2-16
2-10	SCP Byte Register Read Operation Using Double 8-Bit Transfer	2-16
2-11	SCP Byte Register Read Operation Using Single 16-Bit Transfer	2-16
4-1	MC145540 Long Frame Sync Timing	4-8
4-2	MC145540 Short Frame Sync Timing	4-9
4-3	MC145540 Serial Control Port (SCP) Timing	4-11
5-1	Plastic DIP Dimensions	5-1
5-2	Plastic SOG Dimensions	5-1
6-1	MC145540 Handset Application	6-1
6-2	MC145540 Transformer Application	6-2
6-3	MC145540 Transformer + Speaker Application	6-2

LIST OF TABLES

Figure #	Title	Page #
2-1	PCM Full Scale and Zero Words	2-8
2-2	PCM Codes for Digital mW	2-8
3-1	Bit Read/Write Indicator	3-1
3-2	Byte Register Map	3-2
3-3	Input/Output Modes	3-3
3-4	Sidetone Gains	3-4
3-5	Transmit Analog Trim Gain	3-4
3-6	Receive Analog Trim Gain	3-5
3-7	Digital Receive Gain	3-6
3-8	Tone Generator Address Parameters	3-7
3-9	Tone Generator Coefficients for DTMF	3-8
8-1	Tone Generator Address Parameter Destinations	8-2
8-2	Frequency Coefficients for Tone Generator	8-6
8-3	Attenuation Coefficients for Tone Generator	8-34

Motorola reserves the right to make changes without further notice to any products herein. Motorola makes no warranty, representation or guarantee regarding the suitability of its products for any particular purpose, nor does Motorola assume any liability arising out of the application or use of any product or circuit, and specifically disclaims any and all liability, including without limitation consequential or incidental damages. “Typical” parameters can and do vary in different applications. All operating parameters, including “Typicals” must be validated for each customer application by customer’s technical experts. Motorola does not convey any license under its patent rights nor the rights of others. Motorola products are not designed, intended, or authorized for use as components in systems intended for surgical implant into the body, or other applications intended to support or sustain life, or for any other application in which the failure of the Motorola product could create a situation where personal injury or death may occur. Should Buyer purchase or use Motorola products for any such unintended or unauthorized application, Buyer shall indemnify and hold Motorola and its officers, employees, subsidiaries, affiliates, and distributors harmless against all claims, costs, damages, and expenses, and reasonable attorney fees arising out of, directly or indirectly, any claim of personal injury or death associated with such unintended or unauthorized use, even if such claim alleges that Motorola was negligent regarding the design or manufacture of the part. Motorola and Ⓜ are registered trademarks of Motorola, Inc. Motorola, Inc. is an Equal Opportunity/Affirmative Action Employer.

1
GENERAL DESCRIPTION

1.1 INTRODUCTION

The MC145540 ADPCM Codec is a single chip implementation of a PCM codec-filter and an ADPCM encoder/decoder, and therefore provides an efficient solution for applications requiring the digitization and compression of voiceband signals. This device is designed to operate over a wide voltage range, 2.7 to 5.25 V, and as such is ideal for battery powered as well as ac powered applications. The MC145540 ADPCM Codec also includes a serial control port and internal control and status registers that permit a microcontroller to exercise many built-in features.

The ADPCM Codec is designed to meet the 32 kbps ADPCM conformance requirements of CCITT Recommendation G.721 and ANSI T1.301. It also meets ANSI T1.303 and CCITT Recommendation G.723 for 24 kbps ADPCM operation, and the 16 kbps ADPCM standard, CCITT Recommendation G.726. This device also meets the PCM conformance specification of the CCITT G.714 Recommendation.

1.2 FEATURES

Key features of the MC145540 ADPCM Codec include:

- Single 2.7 to 5.25 V Power Supply
- Typical 3 V Power Dissipation of 55 mW, Power Down of 0. 15 mW
- Differential Analog Circuit Design for Lowest Noise
- Complete Mu-Law and A-Law Companding PCM Codec/Filter
- ADPCM Transcoder for 64, 32, 24, and 16 kbps data rates
- Universal Programmable Dual Tone Generator
- Programmable Transmit Gain, Receive Gain, and Sidetone Gain
- Low Noise, High Gain, Three Terminal Input Operational Amplifier for Microphone Interface
- Push-Pull 300 Ω Power Drivers with External Gain Adjust for Receiver Interface
- Push-Pull 300 Ω Auxiliary Output Drivers for Ringer Interface
- Voltage Regulated Charge Pump to Power the Analog Circuitry in Low Voltage Applications
- Receive Side Noise Burst Detect Algorithm

2
DEVICE DESCRIPTION

2.1 MC145540 ADPCM CODEC DEVICE DESCRIPTION

The MC145540 is a single channel Mu-Law or A-Law companding PCM codec-filter with an ADPCM encoder/decoder operating on a single voltage power supply from 2.7 to 5.25 V.

The MC145540 ADPCM Codec is a complete solution for digitizing and reconstructing voice in compliance with CCITT G.714, G.721, G.723, G.726 and ANSI T1.301 and T1.303 for 64, 32, 24, and 16 kbps. This device satisfies the need for high quality, low power, low data rate voice transmission and storage applications and is offered in 28-pin DIP and SOG packages.

Referring to Figure 2-1, the main functional blocks of the MC145540 are the switched capacitor technology PCM codec-filter, the DSP based ADPCM encoder/decoder, and the voltage regulated charge pump. As an introduction to the functionality of the ADPCM Codec, a basic description of these functional blocks follows.

2.1.1 PCM Codec-Filter Block Description

A PCM codec-filter is a device used for digitizing and reconstructing the human voice. These devices were developed primarily for the telephone network to facilitate voice switching and transmission. Once the voice is digitized, it may be switched by digital switching methods or transmitted long distance (T1, microwave, fiber optics, satellites, etc.) without degradation. The name codec is an acronym from “COder” for the analog-to-digital converter (ADC) used to digitize voice, and “DECoder” for the digital-to-analog converter (DAC) used for reconstructing voice. A codec is a single device that does both the ADC and DAC conversions.

To digitize voice intelligibly requires a signal to distortion of about 30 dB for a dynamic range of about 40 dB. This may be accomplished with a linear 13-bit ADC and DAC, but will far exceed the required signal to distortion at amplitudes greater than 40 dB below the peak amplitude. This excess performance is at the expense of bits of data per sample. Two methods of data reduction are implemented by compressing the 13-bit linear scheme to companded 8-bit schemes. These companding schemes follow a segmented or “piecewise-linear” curve formatted as sign bit, three chord bits, and four step bits. For a given chord, all 16 of the steps have the same voltage weighting. As the voltage of the analog input increases, the four step bits increment and carry to the three chord bits, which increment. When the chord bits increment, the step bits double their voltage weighting. This results in an effective resolution of six bits (sign + chord + four step bits) across a 42 dB dynamic range (seven chords above zero, by 6 dB per chord). There are two companding schemes used: Mu-255 Law specifically in North America, and A-Law specifically in Europe. These companding schemes are accepted world wide.

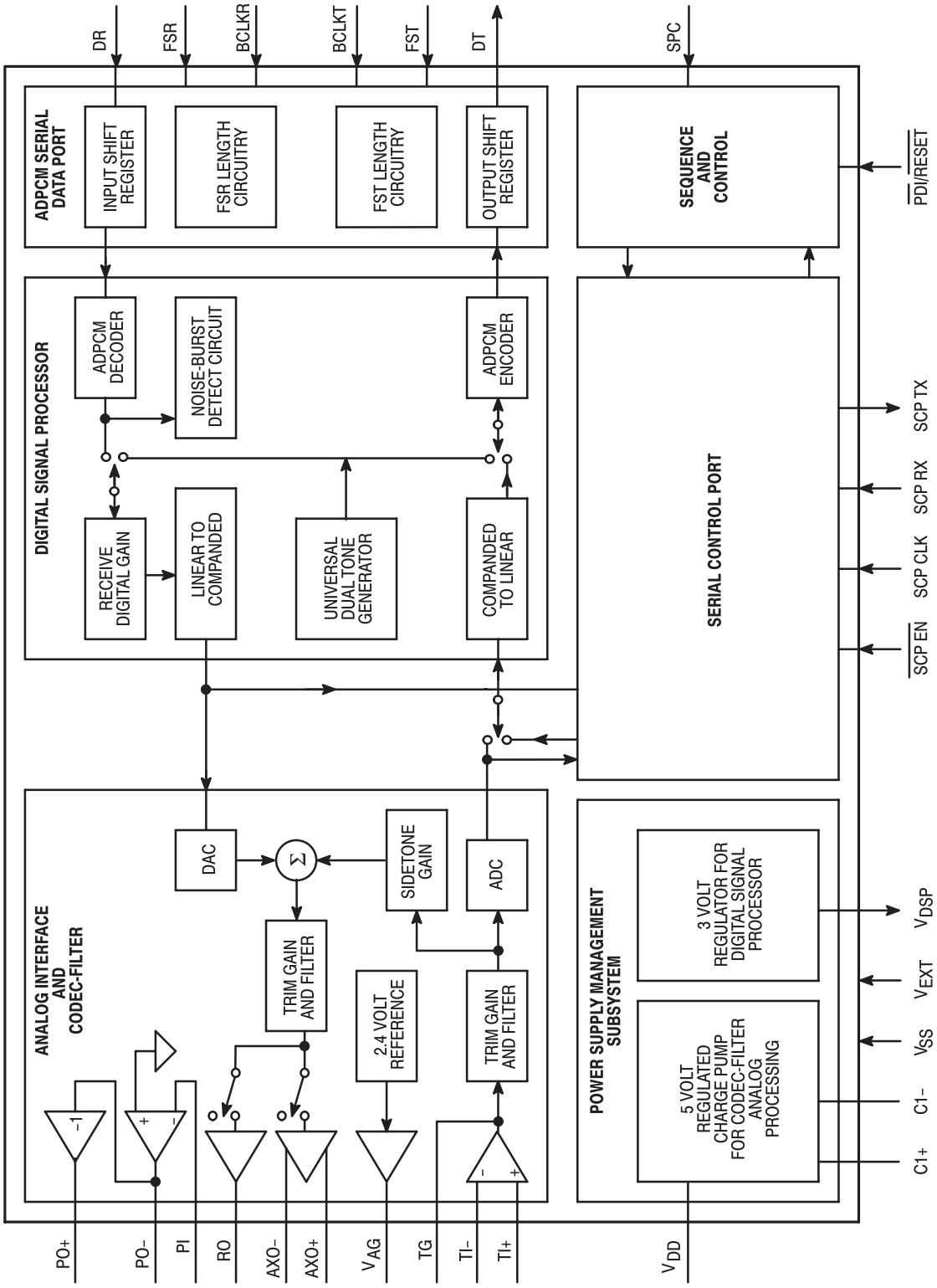

Figure 2-1. MC145540 ADPCM Codec Block Diagram

In a sampling environment, Nyquist theory says that to properly sample a continuous signal, it must be sampled at a frequency higher than twice the signal's highest frequency component. Voice contains spectral energy above 3 kHz, but its absence is not detrimental to intelligibility. To reduce the digital data rate, which is proportional to the sampling rate, a sample rate of 8 kHz was adopted, consistent with a bandwidth of 3 kHz. This sampling requires a low-pass filter to limit the high frequency energy above 3 kHz from distorting the inband signal. The telephone line is also subject to 50/60 Hz power line coupling, which must be attenuated from the signal by a high-pass filter before the analog-to-digital converter.

The digital-to-analog conversion process reconstructs a staircase version of the desired inband signal which has spectral images of the inband signal modulated about the sample frequency and its harmonics. These spectral images are called aliasing components which need to be attenuated to obtain the desired signal. The low-pass filter used to attenuate these aliasing components is typically called a reconstruction or smoothing filter.

The MC145540 ADPCM Codec incorporates this codec function as one of its main functional blocks.

2.1.2 ADPCM Transcoder Block Description

An Adaptive Differential PCM (ADPCM) transcoder is used to reduce the data rate required to transmit a PCM encoded voice signal while maintaining the voice fidelity and intelligibility of the PCM signal.

The ADPCM transcoder is used on both Mu-Law and A-Law 64 kbps data streams which represent either voice or voice band data signals that have been digitized by a PCM codec-filter. The PCM to ADPCM encoder section of this transcoder has a type of linear predicting digital filter which is trying to predict the next PCM sample based on the previous history of the PCM samples. The ADPCM to PCM decoder section implements an identical linear predicting digital filter. The error or difference between the predicted and the true PCM input value is the information that is sent from the encoder to the decoder as an ADPCM word. The characteristics of this ADPCM word include the number of quantized steps (this determines the number of bits per ADPCM word) and the actual meaning of this word is a function of the predictor's output value, the error signal, and the statistics of the history of PCM words. The term "adaptive" applies to the transfer function of the filter that generates the ADPCM word which adapts to the statistics of the signals presented to it. This means that an ADPCM word '3' does not have the same absolute error voltage weighting for the analog signal when the channel is quiet as it does when the channel is processing a speech signal. The ADPCM to PCM decoder section has a reciprocating filter function which interprets the ADPCM word for proper reconstruction of the PCM sample.

The adaptive characteristics of the ADPCM algorithm make it difficult to analyze and quantify the performance of the ADPCM code sequence. The 32 kbps algorithm was optimized for both voice and moderate speed modems ($\leq$4800 baud). This optimization includes that the algorithm supports the voice frequency band of 300 Hz to 3400 Hz with minimal degradation for signal-to-distortion, gain-versus-level, idle channel noise and other analog transmission performance. This algorithm has also been subjected to audibility testing with many languages for Mean Opinion Score (MOS) ratings and performed well when compared to 64 kbps PCM. The standards committees have specified multiple 16000 word test vectors for the encoder and for the decoder to verify compliance. To run these test vectors, the device must be initialized to the reference state by resetting the device.

In contrast to 64 kbps PCM, the ADPCM words appear as random bit activity on an oscilloscope display whether the audio channel is processing speech or a typical PCM idle channel with nominal bit activity. The ADPCM algorithm does not support dc signals with the exception of digital quiet, which will result in all ones in the ADPCM channel. All digital processing is performed on 13-bit linearizations of the 8-bit PCM companded words, whether the words are Mu-Law or A-Law. This allows an ADPCM channel to be intelligibly decoded into a Mu-Law PCM sequence or an A-Law PCM sequence irrespective of whether it was originally digitized as Mu-Law or A-Law. There will be additional quantizing degradation if the companding scheme is changed because the ADPCM algorithm is trying to reconstruct the original 13-bit linear codes, which included companding quantization.

2.1.3 Charge Pump

The charge pump is the functional block that allows the analog signal processing circuitry of the MC145540 to operate with a power supply voltage as low as 2.7 V. This analog signal processing circuitry includes the PCM codec-filter function, the transmit trim gain, the receive trim gain, the sidetone gain control, and the transmit input operational amplifier. This circuitry does not dissipate much current but it does require a nominal voltage of 5 V for the V_{DD} power supply.

The charge pump block is a regulated voltage doubler that takes twice the current it supplies from the voltage applied to the V_{EXT} power supply pin, which may range from 2.7 to 5.25 V and generates the required 5 V V_{DD} supply. The charge pump block receives as inputs the V_{EXT} supply voltage, the same 256 kHz clock that sequences the analog signal processing circuitry, and the Charge Pump Enable signal from the SCP block. It also makes use of the capacitor connected to the C1+ and C1– pins and the decoupling capacitor connected to the V_{DD} pin.

2.2 MC145540 FUNCTIONAL DESCRIPTION

A more detailed description of the circuit functionality for the main functional blocks of the MC145540 follows.

2.2.1 Power Supply Configuration

2.2.1.1 ANALOG SIGNAL PROCESSING POWER SUPPLY

All analog signal processing is powered by the V_{DD} pin at 5 V. This voltage may be applied directly to the V_{DD} pin or 5 V may be obtained by the on-chip 5 V regulated charge pump which is powered from the V_{EXT} pin. The V_{EXT} pin is the main positive power supply pin for this device.

For applications that are not 5 V regulated, the on-chip 5 V regulated charge pump may be turned on and C1 will be required. V_{DD} will require a 1.0 μF decoupling capacitor to filter the voltage spikes of the charge pump. This allows the V_{EXT} power supply to be from 2.7 to 5.25 V. This mode of operation is intended for hand held applications where three NiCad cells or three dry cells would be the power supply.

The on-chip 5 V regulated charge pump is a single stage charge pump that effectively series regulates the amount of voltage it generates and internally applies this regulated voltage to the V_{DD} pin. This 5 V voltage is developed by connecting the external 0.1 μF capacitor, C1, between the V_{EXT} power supply pin and the power supply ground pin, V_{SS}. This puts a charge of as much as 2.7 V on C1. The charge pump circuitry then connects the negative lead of C1 to the V_{EXT} pin, which sums the voltage of C1 with the voltage at V_{EXT} for a minimum potential voltage of 5.4 V. The charge voltage on C1 is regulated such that the summing of voltages is regulated to 5 V. This limits all of the voltages on the device to safe levels for this IC fabrication technology. This charge pumped voltage is then stored on the 1.0 μF capacitor connected at V_{DD} and V_{SS}, which filters and serves as a reservoir for power. The clock period for this charge pump is the same 256 kHz as the analog sequencing clock, minimizing noise problems.

For applications with a regulated 5 V (±5%) power supply, the V_{DD} pin and the V_{EXT} pin are connected to the 5 V power supply. These pins may share one decoupling capacitor in this configuration as a function of external noise on the power supply. The on-chip 5 V regulated charge pump should be turned off via the SCP port at register zero. The external capacitor, C1, should not be populated for these applications.

2.2.1.2 DIGITAL SIGNAL PROCESSING POWER SUPPLY

This device has an on-chip series regulator which limits the voltage of the Digital Signal Processing (DSP) circuitry to about 3 V. This reduces the maximum power dissipation of this circuitry. From the V_{EXT} power supply pin, the DSP circuitry appears as a constant current load instead of a resistive ($CV^2/2$) load for a constant clock frequency. This series regulator is designed to have a low drop-out voltage, which allows the DSP circuitry to work when the V_{EXT} voltage is as low as 2.7 V. The output of this regulator is brought out to the V_{DSP} pin for a 0.1 μF decoupling capacitor. This regulator is not designed to power any loads external to the device.

2.2.2 Analog Interface and Signal Path

2.2.2.1 TRANSMIT ANALOG

The transmit analog portion of this device includes a low-noise, three terminal operational amplifier capable of driving a 2 kΩ load. This op amp has inputs of TI+ and TI– and its output is TG. This op amp is intended to be configured in an inverting gain circuit. The analog signal may be applied directly to the TG pin if this transmit op amp is independently powered down. Power down may be achieved by connecting both the TI+ and TI– inputs to the V_{DD} pin. The TG pin becomes high impedance when the transmit op amp is powered down. The TG pin is internally connected to a time continuous three-pole anti-aliasing pre-filter. This pre-filter incorporates a two-pole Butterworth active low-pass filter, followed by a single passive pole. This pre-filter is followed by a single-ended to differential converter that is clocked at 512 kHz. All subsequent analog processing utilizes fully differential circuitry. The output of the differential converter is followed by the transmit trim gain stage. This stage is intended to compensate for gain tolerances of external components such as microphones. The amount of gain control is 0 to 7 dB in 1 dB steps. This stage accommodates only positive gain because the maximum signal levels of the output of the input op amp are the same as the transmit filter and ADC, which should nominally be next to the clip levels of this device's circuitry. Any requirement for attenuation of the output of the input op amp would mean that it is being overdriven. The gain is programmed via the SCP port in BR1 (b2:b0). The next section is a fully-differential, 5-pole switched-capacitor low-pass filter with a 3.4 kHz frequency cutoff. After this filter is a 3-pole switched-capacitor high-pass filter having a cutoff frequency of about 200 Hz. This high-pass stage has a transmission zero at dc that eliminates any dc coming from the analog input or from accumulated op amp offsets in the preceding filter stages. (This high-pass filter may be removed from the signal path under control of the SCP port BR8 (b4).) The last stage of the high-pass filter is an autozeroed sample and hold amplifier.

One bandgap voltage reference generator and digital-to-analog converter (DAC) are shared by the transmit and receive sections. The autozeroed, switched-capacitor bandgap reference generates precise positive and negative reference voltages that are virtually independent of temperature and power supply voltage. A binary-weighted capacitor array (CDAC) forms the chords of the companding structure, while a resistor string (RDAC) implements the linear steps within each chord. The encode process uses the DAC, the voltage reference, and a frame-by-frame autozeroed comparator to implement a successive-approximation analog-to-digital conversion (ADC) algorithm. All of the analog circuitry involved in the data conversion (the voltage reference, RDAC, CDAC, and comparator) are implemented with a differential architecture.

The nonlinear companded Mu-Law transfer curve of the ADC may be changed to 8-bit linear by BR8 (b5).

The input to the ADC is normally connected to the output of the transmit filter section, but may be switched to measure the voltage at the V_{EXT} pin for battery voltage monitoring. This is selected by the I/O Mode in BR0 (b4:b3). In this mode, the ADC is programmed to output a linear 8-bit PCM word for the voltage at V_{EXT} which is intended to be read in BR9 (b7:b0). The data format for the ADC output is a Don't Care for the sign bit and seven magnitude bits. The scaling for the ADC is for 6.3 V at V_{EXT} equals full scale (BIN X111 1111). The ADPCM algorithm does not support dc signals.

2.2.2.2 TRANSMIT DIGITAL

The Digital Signal Processor (DSP) section of this device is a custom designed, interrupt driven, microcoded machine optimized for implementing the ADPCM algorithms. In the full duplex speech mode, the DSP services one encode interrupt and one decode interrupt per frame (125 μs). The encode algorithm (i.e., 16 kbps, 24 kbps, or 32 kbps ADPCM, or 64 kbps PCM) is determined by the length of the transmit output enable at the FST pin. The length of the FST enable measured in transmit data clock (BCLKT) cycles tells the device which encoding rate to use. This enable length information is used by the encoder each frame. The transmit ADPCM word corresponding to this request will be computed during the next frame and will be available a total of two frames after being requested. This transmit enable length information can be delayed by the device an additional four frames corresponding to a total of six frames. These six frames of delay allow the device to be clocked with the same clocks for both transmit (encode) and receive (decode), and to be frame aligned for applications that require every sixth frame signaling. It is important to note that the enable length information is delayed and not the actual ADPCM

(PCM) sample word. The amount of delay for the FST enable length is controlled in BR7 (b5). If the FST enable goes low before the falling edge of BCLKT during the last bit of the ADPCM word, the digital data output circuitry counts BCLKT cycles to keep the data output (DT pin) low impedance for the duration of the ADPCM data word (2, 3, 4, or 8 BCLKT cycles) minus one half of a BCLKT cycle.

2.2.2.3 RECEIVE

2.2.2.3.1 Receive Digital

The receive digital section of this device accepts serial ADPCM (PCM) words at the DR pin under the control of the BCLKR and FSR pins. The FSR enable duration, measured in BCLKR cycles, tells the device which decode algorithm (i.e., 16 kbps, 24 kbps, or 32 kbps ADPCM, or 64 kbps PCM) the DSP machine should use for the word that is being received at the DR pin. This algorithm may be changed on a frame by frame basis.

The DSP machine receives an interrupt when an ADPCM word has been received and is waiting to be decoded into a PCM word. The DSP machine performs a decode and an encode every frame when the device is operating in its full duplex conversation mode. The DSP machine decodes the ADPCM word according to CCITT G.726 for 32 kbps, 24 kbps, and 16 kbps. This decoding includes the correction for the CCITT/ANSI Sync function, except when the receive digital gain is used. The receive digital gain is anticipated to be user adjustable gain control in handset applications where as much as 12 dB of gain or more than 12 dB of attenuation may be desirable. The receive digital gain is a linear multiply performed on the 13-bit linear data before it is converted to Mu-Law or A-Law, and is programmed via the SCP port in BR3 (b7:b0). The decoded PCM word may be read via the SCP port in BR10 (b7:b0).

2.2.2.3.2 Receive Analog Signal Processing

The receive analog signal processing section includes the DAC described above, a sample and hold amplifier, a trim gain stage, a 5-pole 3400 Hz switched capacitor low-pass filter with sinX/X correction, and a 2-pole active smoothing filter to reduce the spectral components of the switched capacitor filter. (The receive low-pass smoothing filter may be removed from the signal path for the additional spectral components for applications using the on-chip tone generator function described below. This low-pass filter performs the sinX/X compensation. The receive filter is removed from the circuit via the SCP in BR2(b4).) The input to the smoothing filter is the output to the receive trim gain stage. This stage is intended to compensate for gain tolerances of external components such as handset receivers. This stage is capable of 0 to 7 dB of attenuation in 1 dB steps. This stage accommodates only attenuation because the nominal signal levels of the DAC should be next to the clip levels of this device's circuitry and any positive gain would overdrive the outputs. The gain is programmed via the SCP port in BR2 (b2:b0).The output of the 2-pole active smoothing filter is buffered by an amplifier which is output at the RO pin. This output is capable of driving a 2 kΩ load to the V_{AG} pin.

2.2.2.3.3 Receive Analog Output Drivers and Power Supply

The high current analog output circuitry (PO+, PO–, PI, AXO+, AXO–) is powered by the V_{EXT} power supply pin. Due to the wide range of V_{EXT} operating voltages for this device, this circuitry and the RO pin have a programmable reference point of either V_{AG} (2.4 V) or $V_{EXT}/2$. In applications where this device is powered with 5 V, it is recommended that the dc reference for this circuitry be programmed to V_{AG}. This allows maximum output signals for driving high power telephone line transformer interfaces and loud speaker/ringers. For applications that are battery powered, V_{AG} will still be 2.4 V, but the receive analog output circuitry will be powered from as low as 2.7 V. To optimize the output power, this circuitry should be referenced to one half of the battery voltage, $V_{EXT}/2$. The RO pin is powered by the V_{DD} pin, but its dc reference point is programmed the same as the high current analog output circuitry.

This device has two pairs of power amplifiers that are connected in a push-pull configuration. These push-pull power driver pairs have similar drive capabilities, but have different circuit configurations and different intended uses. The PO+ and PO– power drivers are intended to accommodate large gain ranges with precise adjustment by two external resistors for applications such as driving a telephone line or a handset receiver. The PI pin is the inverting input to the PO– power amplifier. The non-inverting input is internally tied to the same reference as the RO output. This allows this amplifier to be used in an inverting gain circuit with two external resistors. The PO+ amplifier has a gain of –1, and is internally connected to the PO– output. This complete power amplifier circuit is a differential (push-pull) amplifier

with adjustable gain which is capable of driving a 300 Ω load to +12 dBm when V_{EXT} is 5 V. The PO+ and PO– outputs are intended to drive loads differentially and not to V_{SS} or V_{AG}. The PO+ and PO– power amplifiers may be powered down independently of the rest of the chip by connecting the PI pin to V_{DD} or in BR2 (b5).

The other paired power driver outputs are the AXO+ and AXO– Auxiliary outputs. These push-pull output amplifiers are intended to drive a ringer or loud speaker with impedance as low as 300 Ω to +12 dBm when V_{EXT} is 5 V. The AXO+ and AXO– outputs are intended to drive loads differentially and not to V_{SS} or V_{AG}. The AXO+ and AXO– power amplifiers may be powered down independently of the rest of the chip via the SCP port in BR2 (b6).

2.2.3 Sidetone

The Sidetone function of this device allows a controlled amount of the output from the transmit filter to be summed with the output of the DAC at the input to the receive low-pass filter. The sidetone component has gains of –8.5 dB, –10.5 dB, –12.0 dB, –13.5 dB, –15.0 dB, –18.0 dB, –21.5 dB, and ≤ –70 dB. The sidetone function is controlled by the SCP port in BR1 (b6:b4).

2.2.4 Universal Tone Generator

The Universal Dual Tone Generator function supports both the transmit and the receive sides of this device. When the tone generator is being used, the decoder function of the DSP circuit is disabled. The output of the tone generator is made available to the input of the receive digital gain function for use at the receive analog outputs. In handset applications, this could be used for generating DTMF, distinctive ringing or call progress feedback signals. In telephone line interface applications, this tone generator could be used for signaling on the line. The tone generator output is also available for the input to the encoder function of the DSP machine for outputting at the DT pin. This function is useful in handset applications for non-network signaling such as information services, answering machine control, etc. At the network interface side of a cordless telephone application, this function could be used for dialing feedback or call progress to the handset. The tone generator function is controlled by the SCP port in BR4, BR5, and BR7. The tone generator does not work when the device is operated in 64 kbps mode, except when analog loopback is enabled at BR0 (b5). For more information on programming the tone generators, see Section 8.

2.2.5 Power Down

There are two methods of putting all of this device into a low power consumption mode that makes the device nonfunctional and consumes virtually no power. $\overline{\text{PDI}}/\overline{\text{RESET}}$ is the power down input and reset pin which, when taken low for 10 SPC clock cycles or more, powers down the device. Another way to power the device down is by the SCP port at BR0. BR0 allows the analog section of this device to be powered down individually and/or the digital section of this device to be powered down individually. When the chip is powered down, the V_{AG}, TG, RO, PO+, PO–, AXO+, AXO–, DT, and SCP Tx outputs are high impedance . To return the chip to the power up state, $\overline{\text{PDI}}/\overline{\text{RESET}}$ must be high and the SPC clock and the FST or the FSR frame sync pulses must be present. The ADPCM algorithm is reset to the CCITT initial state following the reset transition from low-to-high logic states. The DT output will remain in a high-impedance state for at least two FST pulses after power up.

2.2.6 Signal Processing Clock (SPC)

This is the clock that sequences the DSP circuit. This clock may be asynchronous to all other functions of this device. Clock frequencies of 20.48 MHz or 20.736 MHz are recommended. This clock is also used to drive a digitally phase locked prescaler that is referenced to FST (8 kHz) and automatically determines the proper divide ratio to use for achieving the required 256 kHz internal sequencing clock for all analog signal processing, including analog-to-digital conversion, digital-to-analog conversion, transmit filtering, receive filtering, and analog gain functions of this device and the charge pump.

The SPC input accepts an input clock frequency from 20.48 to 23.04 MHz. This clock frequency should be a multiple of 256 kHz within a tolerance of ± 10 SPC clock cycles per FST rising edge. For an FST of 8 kHz without jitter, this equates to a tolerance of ± 80 kHz. The total tolerance is measured in SPC

cycles per FST rising edge. If FST has jitter, the jitter must be measured in SPC clock cycles which will be subtracted from 10, and the frequency tolerance for SPC should be tightened accordingly. (The SPC clock may be optionally specified for higher frequencies. Contact the factory for more information.)

The analog sequencing function of the SPC clock may be eliminated by reprogramming the device to use the BCLKR pin as the direct input for the required 256 kHz analog sequencing clock. The 256 kHz clock applied at BCLKR must be an integer 32 times the FST 8 kHz clock and be approximately rising edge aligned with the FST rising edge. This mode requires that the transmit and receive ADPCM transfers be controlled by the BCLKT pin. This is reprogrammed via the SCP port in BR0 (b7).

2.2.7 Digital I/O

The MC145540 is programmable for Mu-Law or A-Law. The timing for the PCM data transfer is independent of the companding scheme selected. Table 2-1 shows the 8-bit data word format for positive and negative zero and full scale for both 64 kbps companding schemes. Refer to Section 2.4.3, Figures 2-3 through 2-7, for a summary and comparison of the five PCM data interface modes of this device.

2.2.7.1 LONG FRAME SYNC

Long Frame Sync is the industry name for one type of clocking format which controls the transfer of the ADPCM or PCM data words. Refer to Section 2.4.3, Figures 2-3 through 2-6. The “Frame Sync” or “Enable” is used for two specific synchronizing functions. The first is to synchronize the PCM data word transfer, and the second is to control the internal analog-to-digital and digital-to-analog conversions. The term “Sync” refers to the function of synchronizing the PCM data word onto or off of the multiplexed serial PCM data bus, also known as a PCM highway. The term “Long” comes from the duration of the frame sync measured in PCM data clock cycles. Long Frame Sync timing occurs when the frame sync is used directly as the PCM data output driver enable. This results in the PCM output going low impedance with the rising edge of the transmit frame sync, and remaining low impedance for the duration of the transmit frame sync.

Table 2-1. PCM Full Scale and Zero Words

Level	Mu-Law			A-Law		
	Sign Bit	Chord Bits	Step Bits	Sign Bit	Chord Bits	Step Bits
+ Full Scale	1	0 0 0	0 0 0 0	1	0 1 0	1 0 1 0
+ Zero	1	1 1 1	1 1 1 1	1	1 0 1	0 1 0 1
– Zero	0	1 1 1	1 1 1 1	0	1 0 1	0 1 0 1
– Full Scale	0	0 0 0	0 0 0 0	0	0 1 0	1 0 1 0

Table 2-2. PCM Codes for Digital mW

Phase	Mu-Law			A-Law		
	Sign Bit	Chord Bits	Step Bits	Sign Bit	Chord Bits	Step Bits
$\pi/8$	0	0 0 1	1 1 1 0	0	0 1 1	0 1 0 0
$3\pi/8$	0	0 0 0	1 0 1 1	0	0 1 0	0 0 0 1
$5\pi/8$	0	0 0 0	1 0 1 1	0	0 1 0	0 0 0 1
$7\pi/8$	0	0 0 1	1 1 1 0	0	0 1 1	0 1 0 0
$9\pi/8$	1	0 0 1	1 1 1 0	1	0 1 1	0 1 0 0
$11\pi/8$	1	0 0 0	1 0 1 1	1	0 1 0	0 0 0 1
$13\pi/8$	1	0 0 0	1 0 1 1	1	0 1 0	0 0 0 1
$15\pi/8$	1	0 0 1	1 1 1 0	1	0 1 1	0 1 0 0

The implementation of Long Frame Sync for this device has maintained industry compatibility and been optimized for external clocking simplicity. The PCM data output goes low impedance with the rising edge of the FST pin but the MSB of the data is clocked out due to the logical AND of the transmit frame sync (FST pin) with the transmit data clock (BCLKT pin). This allows either the rising edge of the FST enable or the rising edge of the BCLKT data clock to be first. This implementation includes the PCM data output remaining low impedance until the middle of the LSB (seven and a half data clock cycles for 64 kbps PCM, three and a half data clock cycles for 32 kbps ADPCM, etc.). This allows the frame sync to be approximately rising edge aligned with the initiation of the PCM data word transfer but the frame sync does not have a precise timing requirement for the end of the PCM data word transfer. This prevents bus contention between similar devices on a common bus. The device recognizes Long Frame Sync clocking when the frame sync is held high for two consecutive falling edges of the transmit data clock.

In the full duplex speech mode, the DSP services one encode interrupt and one decode interrupt per frame (125 μs). The encode algorithm (i.e., 16 kbps, 24 kbps, or 32 kbps ADPCM, or 64 kbps PCM) is determined by the length of the transmit output enable at the FST pin. The length of the FST enable measured in transmit data clock (BCLKT) cycles tells the device which encoding rate to use. This enable length information is used by the encoder each frame. The transmit ADPCM word corresponding to this request will be computed during the next frame and be available a total of two frames after being requested. This transmit enable length information can be delayed by the device an additional four frames corresponding to a total of six frames. This six frames of delay allows the device to be clocked with the same clocks for both transmit (encode) and receive (decode), and to be frame aligned for applications that require every sixth frame signaling. It is important to note that the enable length information is delayed and not the actual ADPCM (PCM) sample word. The amount of delay for the FST enable length is controlled by the SCP port at BR7 (b5). The digital data output circuitry counts BCLKT cycles to keep the data output (DT pin) low impedance for the duration of the ADPCM data word (2, 3, 4, or 8 BCLKT cycles) minus one half of a BCLKT cycle.

The length of the FST enable tells the DSP what encoding algorithm to use. The transmit logic decides on each frame sync whether it should interpret the next frame sync pulse as a Long or a Short Frame Sync. The device is designed to prevent PCM bus contention by not allowing the PCM data output to go low impedance for at least two frame sync cycles after power is applied or when coming out of the power-down mode.

The receive side of the device is designed to accept the same frame sync and data clock as the transmit side and to be able to latch its own transmit PCM data word. Thus the PCM digital switch only needs to be able to generate one type of frame sync for use by both transmit or receive sections of the device.

The logical AND of the receive frame sync with the receive data clock tells the device to start latching the serial word into the receive data input on the falling edges of the receive data clock. The internal receive logic counts the receive data clock falling edges while the FSR enable is high and transfers the enable length and the PCM data word into internal registers for access by the DSP machine which also sets the DSP's decoder interrupt.

The receive digital section of this device accepts serial ADPCM (PCM) words at the DR pin under the control of the BCLKR and FSR pins. The FSR enable duration measured in BCLKR cycles, tells the device which decode algorithm (i.e., 16 kbps, 24 kbps, or 32 kbps ADPCM, or 64 kbps PCM) the DSP machine should use for the word that is being received at the DR pin. This algorithm may be changed on a frame by frame basis.

When the device is programmed to be in the PCM Codec mode by BR0 (4:3), the device will output and input the complete 8-bit PCM words using the long frame sync clocking format as though the FST and FSR pulses were held high for eight data clock cycles.

The DSP machine receives an interrupt when an ADPCM word has been received and is waiting to be decoded into a PCM word. The DSP machine performs a decode and an encode every frame when the device is operating in its full duplex conversation mode. The DSP machine decodes the ADPCM word according to CCITT G.726 for 32 kbps, 24 kbps, and 16 kbps.

2.2.7.2 SHORT FRAME SYNC

Short Frame Sync is the industry name for this type of clocking format which controls the transfer of the ADPCM data words. Refer to Section 2.4.3, Figure 2-7. This device uses Short Frame Sync timing for 32 kbps ADPCM only. The “Frame Sync” or “Enable” is used for two specific synchronizing functions. The first is to synchronize the ADPCM data word transfer, and the second is to control the internal analog-to-digital and digital-to-analog conversions. The term “Sync” refers to the function of synchronizing the ADPCM data word onto or off of the multiplexed serial ADPCM data bus, also known as a PCM highway. The term “Short” comes from the duration of the frame sync measured in PCM data clock cycles. Short Frame Sync timing occurs when the frame sync is used as a “pre-synchronization” pulse that is used to tell the internal logic to clock out the ADPCM data word under complete control of the data clock. The Short Frame Sync is held high for one falling data clock edge. The device outputs the ADPCM data word beginning with the following rising edge of the data clock. This results in the ADPCM output going low impedance with the rising edge of the transmit data clock, and remaining low impedance until the middle of the LSB (three and a half PCM data clock cycles).

The device recognizes Short Frame Sync clocking when the frame sync is held high for one and ***only one*** falling edge of the transmit data clock. The transmit logic decides on each frame sync whether it should interpret the next frame sync pulse as a Long or a Short Frame Sync. It is not recommended to switch between Long Frame Sync and Short Frame Sync clocking without going through a power down cycle due to bus contention problems. The device is designed to prevent PCM bus contention by not allowing the ADPCM data output to go low impedance for at least two frame sync cycles after power is applied or when coming out of a power-down mode.

The receive side of the device is designed to accept the same frame sync and data clock as the transmit side and to be able to latch its own transmit ADPCM data word. Thus the PCM digital switch only needs to be able to generate one type of frame sync for use by both transmit or receive sections of the device.

The falling edge of the receive data clock (BCLKR) latching a high logic level at the receive frame sync (FSR) input tells the device to start latching the 4-bit ADPCM serial word into the receive data input on the following four falling edges of the receive data clock. The internal receive logic counts the receive data clock cycles and transfers the ADPCM data word to a register for access by the DSP.

When the device is programmed to be in the PCM Codec mode by BR0 (4:3), the device will output the complete 8-bit PCM word using the short frame sync clocking format. The 8-bit PCM word will be clocked out (or in) the same way that the 4-bit ADPCM word would be, except that the fourth bit will be valid for the full BCLKT period and the eighth bit will be valid for only one half of the BCLKT period.

2.3 PIN ASSIGNMENT

The pin assignments for the MC145540 28-lead DIP and SOG packages are shown in Figure 2-2.

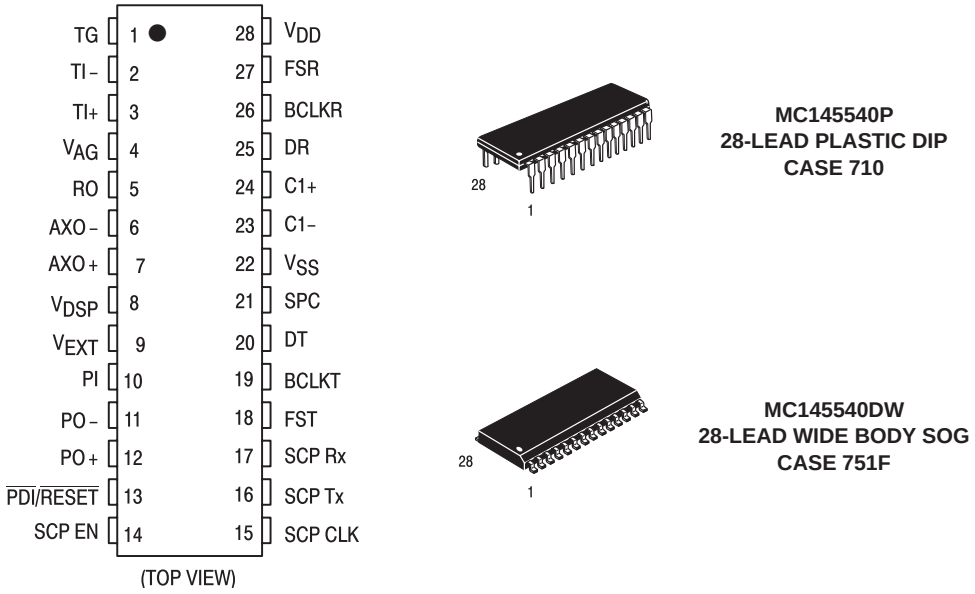

Figure 2-2. Pin Assignments

2.4 PIN DESCRIPTIONS

The pin descriptions are listed in functional groups and provide detailed information about the particular subsystem of the device and the associated pins.

2.4.1 Power Supply Pins

V_{SS}
Negative Power Supply (Pin 22)

This is the most negative power supply and is typically connected to 0 V.

V_{EXT}
External Power Supply Input (Pin 9)

This power supply input pin must be between 2.7 and 5.25 V. Internally, it is connected to the input of the V_{DSP} voltage regulator, the 5 V regulated charge pump, and all digital I/O including the Serial Control Port and the ADPCM Serial Data Port. This pin is also connected to the analog output drivers (PO+, PO–, AXO+ and AXO–). This pin should be decoupled to V_{SS} with a 0.1 µF ceramic capacitor. This pin is internally connected to the V_{DD} and V_{DSP} pins when the device is powered down.

V_{DSP}
Digital Signal Processor Power Supply Output (Pin 8)

This pin is connected to the output of the on-chip V_{DSP} voltage regulator which supplies the positive voltage to the DSP circuitry and to the other digital blocks of the ADPCM Codec. This pin should be decoupled to V_{SS} with a 0.1 µF ceramic capacitor. This pin cannot be used for powering external loads. This pin is internally connected to the V_{EXT} pin during power down to retain memory.

V_{DD}
Positive Power Supply Input/Output (Pin 28)

This is the positive output of the on-chip voltage regulated charge pump and the positive power supply input to the analog sections of the device. Depending on the supply voltage available, this pin can function in one of two different operating modes.

When V_{EXT} is supplied from a regulated 5 V ±5% power supply, V_{DD} is an input and should be externally connected to V_{EXT}. Charge pump capacitor C1 should not be used and the charge pump should be disabled in BR0 (b2). In this case V_{EXT} and V_{DD} can share the same 0.1 µF ceramic decoupling capacitor to V_{SS}.

When V_{EXT} is supplied from 2.70 to 5.25 V, such as battery powered applications, the charge pump should be used. In this case V_{DD} is the output of the on-chip voltage regulated charge pump and **must not** be connected to V_{EXT}. V_{DD} should be decoupled to V_{SS} with a 1.0 µF ceramic capacitor. This pin cannot be used for powering external loads in this operating mode. This pin is internally connected to the V_{EXT} pin when the charge pump is turned off or the device is powered down.

V_{AG}
Analog Ground Output (Pin 4)

This output pin provides a mid-supply analog ground regulated to 2.4 V. All analog signal processing within this device is referenced to this pin. This pin should be decoupled to V_{SS} with a 0.01 to 0.1 µF ceramic capacitor. If the audio signals to be processed are referenced to V_{SS}, then special precautions must be utilized to avoid noise between V_{SS} and the V_{AG} pin. Refer to the applications information in this document for more information. The V_{AG} pin becomes high impedance when in analog power-down mode.

C1–, C1+
Charge Pump Capacitor Pins (Pin 23 and 24)

These are the capacitor connections to the internal voltage regulated charge pump that generate the V_{DD} supply voltage. A 0.1 µF capacitor should be placed between these pins. Note that if an external V_{DD} is supplied, this capacitor should not be in the circuit.

2.4.2 Analog Interface Pins

TG
Transmit Gain (Pin 1)

This is the output of the transmit gain setting operational amplifier and the input to the transmit bandpass filter. This op amp is capable of driving a 2 kΩ load to the V_{AG} pin. When TI– and TI+ are connected to V_{DD}, the TG op amp is powered down and the TG pin becomes a high-impedance input to the transmit filter. All signals at this pin are referenced to the V_{AG} pin. This pin is high impedance when the device is in the analog power-down mode. This op amp is powered by the V_{DD} pin.

TI–
Transmit Analog Input (Inverting) (Pin 2)

This is the inverting input of the transmit gain setting operational amplifier. Gain setting resistors are usually connected from this pin to TG and from this pin to the analog signal source. The common mode range of the TI+ and TI– pins is from 1.0 V, to V_{DD} – 2 V. Connecting this pin and TI+ (pin 3) to V_{DD} will place this amplifier's output (TG) in a high-impedance state, thus allowing the TG pin to serve as a high-impedance input to the transmit filter.

TI+
Transmit Analog Input (Non-Inverting) (Pin 3)

This is the non-inverting input of the transmit input gain setting operational amplifier. This pin accommodates a differential to single ended circuit for the input gain setting op amp. This allows input signals that are referenced to the V_{SS} pin to be level shifted to the V_{AG} pin with minimum noise. This pin may be connected to the V_{AG} pin for an inverting amplifier configuration if the input signal is already referenced to the V_{AG} pin. The common mode range of the TI+ and TI– pins is from 1.0 V, to V_{DD} – 2 V. Connecting this pin and TI– (pin 2) to V_{DD} will place this amplifier's output (TG) in a high-impedance state, thus allowing the TG pin to serve as a high-impedance input to the transmit filter.

RO
Receive Analog Output (Pin 5)

This is the non-inverting output of the receive smoothing filter from the digital-to-analog converter. This output is capable of driving a 2 kΩ load to 1.575 V peak referenced to the V_{AG} pin. This pin may be dc referenced to either the V_{AG} pin or a voltage of half of V_{EXT} by BR2 (b7). This pin is high impedance when the device is in the analog power-down mode. This pin is high impedance except when it is enabled for analog signal output.

AXO–
Auxiliary Audio Power Output (Inverting) (Pin 6)

This is the inverting output of the auxiliary power output drivers. The Auxiliary Power Driver is capable of differentially driving a 300 Ω load. This power amplifier is powered from V_{EXT} and its output can swing to within 0.5 V of V_{SS} and V_{EXT}. This pin may be dc referenced to either the V_{AG} pin or a voltage of half of V_{EXT} by BR2 (b7). This pin is high impedance in power down. This pin is high impedance except when it is enabled for analog signal output.

AXO+
Auxiliary Audio Power Output (Non-Inverting) (Pin 7)

This is the non-inverting output of the auxiliary power output drivers. The Auxiliary Power Driver is capable of differentially driving a 300 Ω load. This power amplifier is powered from V_{EXT} and its output can swing to within 0.5 V of V_{SS} and V_{EXT}. This pin may be dc referenced to either the V_{AG} pin or a voltage of half of V_{EXT} by BR2 (b7). This pin is high impedance in power down. This pin is high impedance except when it is enabled for analog signal output.

PI
Power Amplifier Input (Pin 10)

This is the inverting input to the PO– amplifier. The non-inverting input to the PO – amplifier may be dc referenced to either the V_{AG} pin or a voltage of half of V_{EXT} by BR2 (b7). The PI and PO– pins are used with external resistors in an inverting op amp gain circuit to set the gain of the PO+ and PO– push-pull

power amplifier outputs. Connecting PI to V_{DD} will power down these amplifiers and the PO+ and PO– outputs will be high impedance.

PO–
Power Amplifier Output (Inverting) (Pin 11)

This is the inverting power amplifier output that is used to provide a feedback signal to the PI pin to set the gain of the push-pull power amplifier outputs. This power amplifier is powered from V_{EXT} and its output can swing to within 0.5 V of V_{SS} and V_{EXT}. This should be noted when setting the gain of this amplifier. This pin is capable of driving a 300 Ω load to PO+ independent of supply voltage. The PO+ and PO– outputs are differential (push-pull) and capable of driving a 300 Ω load to 3.15 V peak, which is 6.3 V peak-to-peak when a nominal 5 V power supply is used for V_{EXT}. The bias voltage and signal reference for this pin may be dc referenced to either the V_{AG} pin or a voltage of half of V_{EXT} by BR2 (b7). Low impedance loads must be between PO+ and PO–. This pin is high impedance when the device is in the analog power-down mode. This pin is high impedance except when it is enabled for analog signal output.

PO+
Power Amplifier Output (Non-Inverting) (Pin 12)

This is the non-inverting power amplifier output that is an inverted version of the signal at PO–. This power amplifier is powered from V_{EXT} and its output can swing to within 0.5 V of V_{SS} and V_{EXT}. This pin is capable of driving a 300 Ω load to PO–. This pin may be dc referenced to either the V_{AG} pin or a voltage of half of V_{EXT} by BR2 (b7). This pin is high impedance when the device is in the analog power-down mode. This pin is high impedance except when it is enabled for analog signal output. See PI and PO– for more information.

2.4.3 ADPCM/PCM Serial Interface

FST
Frame Sync, Transmit (Pin 18)

When used in the Long Frame Sync or Short Frame Sync mode, this pin accepts an 8 kHz clock that synchronizes the output of the serial ADPCM data at the DT pin.

BCLKT
Bit Clock, Transmit (Pin 19)

When used in the Long Frame Sync or Short Frame Sync mode, this pin accepts any bit clock frequency from 64 to 5120 kHz.

DT
Data, Transmit (Pin 20)

This pin is controlled by FST and BCLKT and is high-impedance except when outputting data.

SPC
Signal Processor Clock (Pin 21)

This input accepts a clock frequency from 20.48 to 23.04 MHz that is used as the DSP engine master clock. Internally the device divides down this clock to generate the 256 kHz clock required by the PCM Codec. See Section 2.2.6 for additional information. (This clock may be optionally specified for higher frequencies. Contact the factory for more information.)

DR
Data, Receive (Pin 25)

ADPCM data to be decoded are applied to this input, which operates synchronously with FSR and BCLKR to enter the data in a serial format.

BCLKR
Bit Clock, Receive (Pin 26)

When used in the Long Frame Sync or Short Frame Sync mode, this pin accepts any bit clock frequency from 64 to 5120 kHz. This pin may be used for applying an external 256 kHz clock for sequencing the analog signal processing functions of this device. This is selected by the SCP port at BR0 (b7).

FSR
Frame Sync, Receive (Pin 27)

When used in the Long Frame Sync or Short Frame Sync mode, this pin accepts an 8 kHz clock that synchronizes the input of the serial ADPCM data at the DR pin. FSR can operate asynchronous to FST in the Long Frame Sync or Short Frame Sync mode.

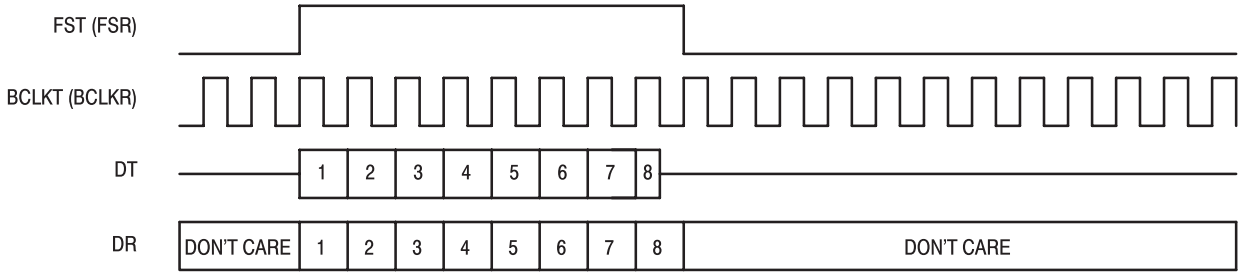

Figure 2-3. Long Frame Sync — 64 kbps PCM Data Timing

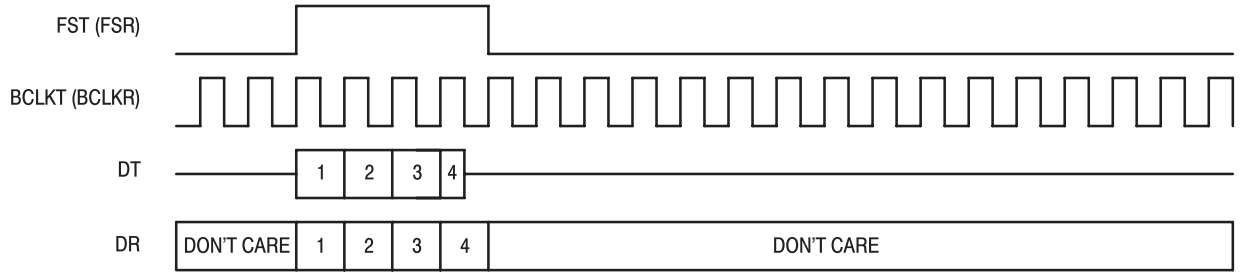

Figure 2-4. Long Frame Sync — 32 kbps ADPCM Data Timing

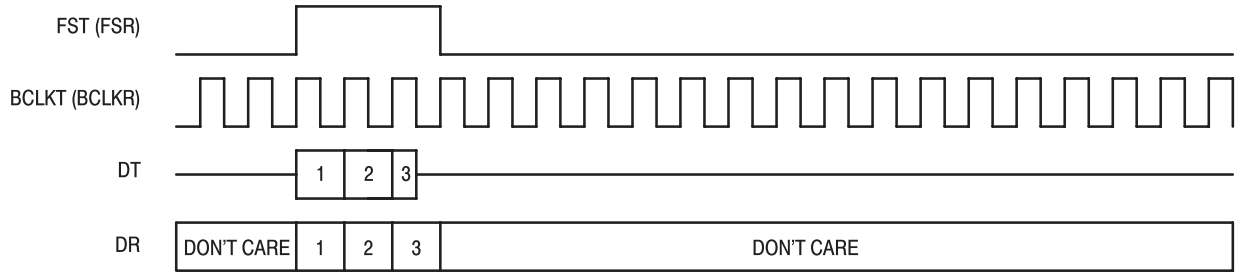

Figure 2-5. Long Frame Sync — 24 kbps ADPCM Data Timing

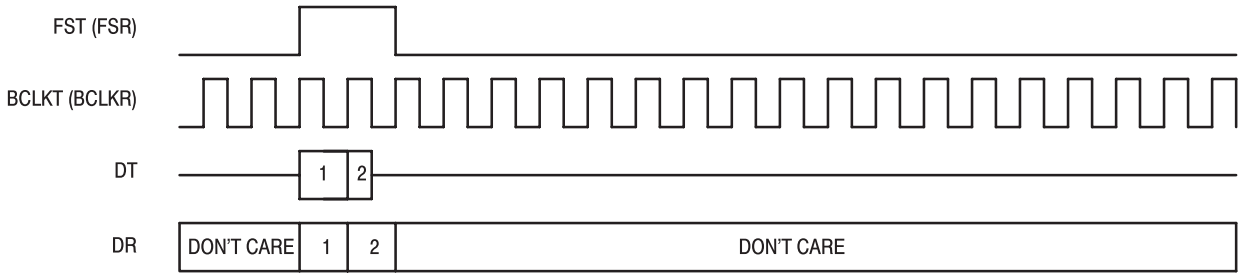

Figure 2-6. Long Frame Sync — 16 kbps ADPCM Data Timing

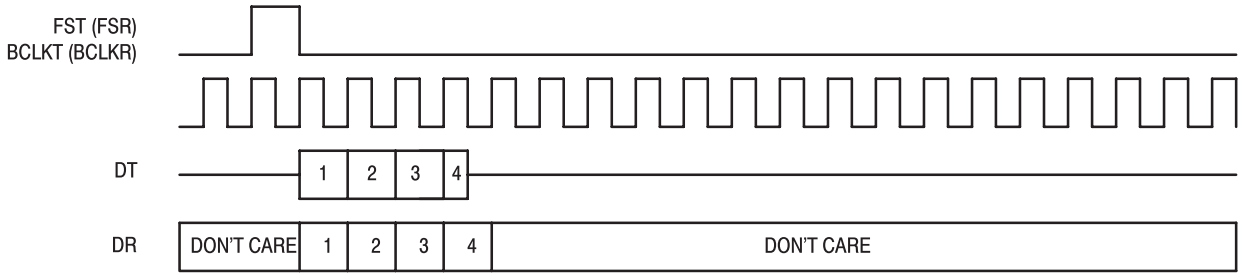

Figure 2-7. Short Frame Sync — 32 kbps ADPCM Data Timing

2.4.4 Serial Control Port (SCP) Interface

The MC145540 is equipped with an industry standard Serial Control Port Interface. The Serial Control Port (SCP) is used by an external controller, such as an M68HC05 family microcontroller, to communicate with the MC145540 ADPCM Codec.

The SCP is a full-duplex four-wire interface used to pass control and status information to and from the ADPCM Codec. The Serial Control Port Interface consists of a transmit output, a receive input, a data clock, and an enable signal. These device pins are known as SCP Tx, SCP Rx, SCP CLK, and $\overline{\text{SCP EN}}$, respectively. The SCP Clock determines the rate of exchange of data in both the transmit and receive directions, and the SCP Enable signal governs when this exchange is to take place.

The operation and configuration of the ADPCM Codec is controlled by setting the state of the control and status registers within the MC145540 and then monitoring these control and status registers. The control and status registers reside in sixteen 8-bit wide Byte Registers, BR0-BR15. A complete register map and detailed register descriptions can be found in Section 3.

2.4.4.1 BYTE REGISTER OPERATIONS

The 16 Byte Registers are addressed by addressing a 4-bit byte register address (A3:A0) as shown in Figures 2-8 and 2-9. A second 8-bit operation transfers the data word (D7:D0). Alternatively, these registers can be accessed with a single 16-bit operation as shown in Figures 2-10 and 2-11.

$\overline{\text{PDI}}$/$\overline{\text{RESET}}$
Power Down Input/Reset (Pin 13)

A logic 0 applied to this input forces the device into a low power dissipation mode. A rising edge on this pin causes power to be restored and the ADPCM RESET state (specified in the standards) to be forced. See Section 2.2.5 for additional information.

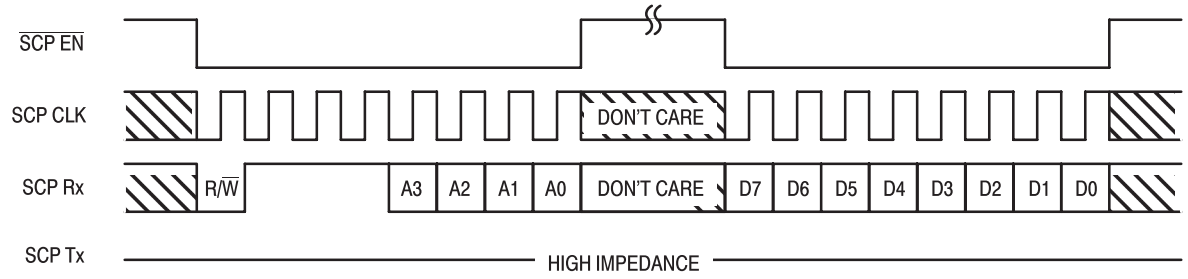

Figure 2-8. SCP Byte Register Write Operation Using Double 8-Bit Transfer

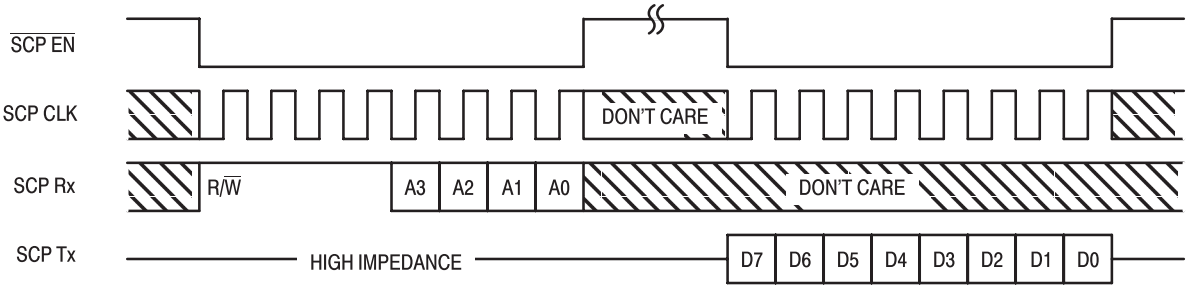

Figure 2-9. SCP Byte Register Read Operation Using Double 8-Bit Transfer

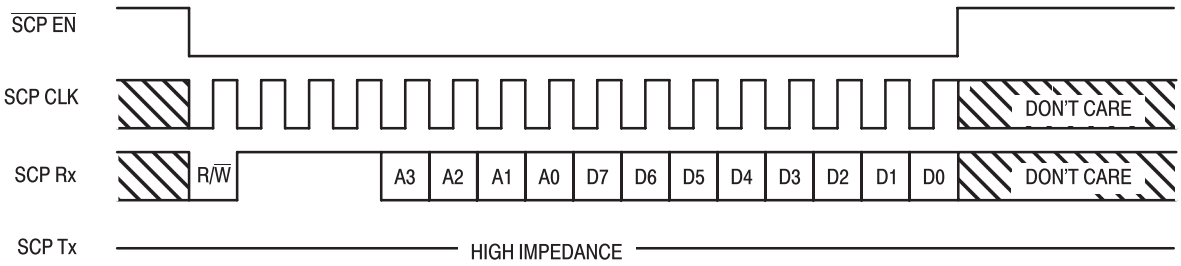

Figure 2-10. SCP Byte Register Write Operation Using Single 16-Bit Transfer

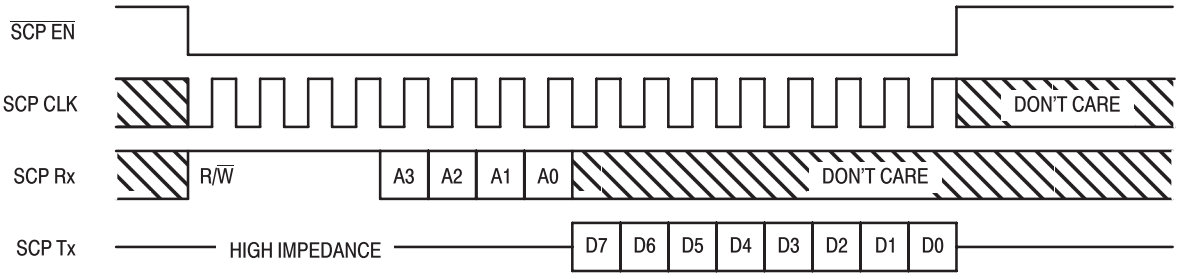

Figure 2-11. SCP Byte Register Read Operation Using Single 16-Bit Transfer

$\overline{\text{SCP EN}}$
Serial Control Port Enable Input (Pin 14)

This pin, when held low, selects the Serial Control Port (SCP) for the transfer of control and status information into and out of the MC145540 ADPCM Codec. This pin should be held low for a total of 16 periods of the SCP CLK signal in order for information to be transferred into or out of the MC145540 ADPCM Codec. The timing relationship between $\overline{\text{SCP EN}}$ and SCP CLK is shown in Figures 2-8 through 2-11.

SCP CLK
Serial Control Port Clock Input (Pin 15)

This input to the device is used for controlling the rate of transfer of data into and out of the SCP Interface. Data are clocked into the MC145540 ADPCM Codec from SCP Rx on rising edges of SCP CLK. Data are shifted out of the device on SCP Tx on falling edges of SCP CLK. SCP CLK can be any frequency from 0 to 4.096 MHz. An SCP transaction takes place when $\overline{\text{SCP EN}}$ is brought low. Note that SCP CLK is ignored when $\overline{\text{SCP EN}}$ is high (i.e., it may be continuous or it can operate in a burst mode).

SCP Tx
Serial Control Port Transmit Output (Pin 16)

SCP Tx is used to output control and status information from the MC145540 ADPCM Codec. Data are shifted out of SCP Tx on the falling edges of SCP CLK, most significant bit first.

SCP Rx
Serial Control Port Receive Input (Pin 17)

SCP Rx is used to input control and status information to the MC145540 ADPCM Codec. Data are shifted into the device on rising edges of SCP CLK. SCP Rx is ignored when data are being shifted out of SCP Tx or when $\overline{\text{SCP EN}}$ is high.

3
SERIAL CONTROL PORT REGISTERS

3.1 INTRODUCTION

This section describes all of the MC145540 ADPCM Codec control and status registers available via the Serial Control Port (SCP) Interface. A Register Map is given in Table 3-2. Each register is then described in detail.

3.2 REGISTER MAP

The SCP register map consists of 16 byte registers. Registers BR0–BR5 and BR7–BR10 provide external control of and status of the part. Register BR15 holds the value of the mask number for the particular MC145540. BR6 and BR11–BR14 are not defined and as such are presently reserved.

3.3 BIT DESCRIPTION LEGEND

Each bit described in the following sections has a read/write indicator associated with it. The read/write indicator, shown in the lower right corner of each bit, shows what type of bit resides there. The options are described in Table 3-1.

Table 3-1. Bit Read/Write Indicator

Indicator	Type	Description
rw	Read/Write	A Read/Write bit may be written to by the external microcontroller. The information that is read back will be the data that was written.
ro	Read Only	A Read Only bit may only be read by the external microcontroller. Writing to it has no effect unless otherwise specified in the text. When the text says that an “ro” bit is set or cleared, this operation is performed internally by the MC145540.
ro/wo	Read Only/ Write Only	A Read Only/Write Only bit may be written to by the external microcontroller. However, the value that is read back by the external microcontroller is not necessarily the value that was written. An “ro” bit is set and cleared by some internal operation in the MC145540.

NOTE

“Setting” a bit corresponds to writing a one to the register and “clearing” a bit corresponds to writing a zero to the register.

Table 3-2. Byte Register Map

Byte	b7	b6	b5	b4	b3	b2	b1	b0
BR0	Ext 256 kHz Clk	Mu/A Law Select	Analog Loopback	I/O Mode (1)	I/O Mode (0)	Charge Pump Disable	Analog Power Down	Digital Power Down
BR1	Reserved	Sidetone Gain (2)	Sidetone Gain (1)	Sidetone Gain (0)	Transmit Mute	Transmit Gain (2)	Transmit Gain (1)	Transmit Gain (0)
BR2	RO Reference Select	AXO Enable	PO Disable	Receive Filter Disable	RO Mute	Analog Receive Gain (2)	Analog Receive Gain (1)	Analog Receive Gain (0)
BR3	Digital Rx Gain Enable	Digital Rx Gain (6)	Digital Rx Gain (5)	Digital Rx Gain (4)	Digital Rx Gain (3)	Digital Rx Gain (2)	Digital Rx Gain (1)	Digital Rx Gain (0)
BR4	N.B. Time (7)/ Tone Param. (7)	N.B. Time (6)/ Tone Param. (6)	N.B. Time (5)/ Tone Param. (5)	N.B. Time (4)/ Tone Param. (4)	N.B. Time (3)/ Tone Param. (3)	N.B. Time (2)/ Tone Param. (2)	N.B. Time (1)/ Tone Param. (1)	N.B. Time (0)/ Tone Param. (0)
BR5	N.B. Threshold (7) / Address Param. (1)	N.B. Threshold (6) / Address Param. (0)	N.B. Threshold (5) / Don't Care	N.B. Threshold (4) / Don't Care	N.B. Threshold (3) / Tone Param. (11)	N.B. Threshold (2) / Tone Param. (10)	N.B. Threshold (1) / Tone Param. (9)	N.B. Threshold (0) / Tone Param. (8)
BR6	Reserved	Reserved	Reserved	Reserved	Reserved	Reserved	Reserved	Reserved
BR7	Tone Param. Status	N.B. Detect Enable	2/6 Delay	G.726/ Motorola 16 kbps	Tone Enable	Reserved	Tone 1 Enable	Tone 2 Enable
BR8	Software Encoder Reset	Software Decoder Reset	Linear Codec Mode	Highpass Disable	Reserved	Reserved	Reserved	Reserved
BR9	Encoder PCM (7)	Encoder PCM (6)	Encoder PCM (5)	Encoder PCM (4)	Encoder PCM (3)	Encoder PCM (2)	Encoder PCM (1)	Encoder PCM (0)
BR10	D/A PCM (7)	D/A PCM (6)	D/A PCM (5)	D/A PCM (4)	D/A PCM (3)	D/A PCM (2)	D/A PCM (1)	D/A PCM (0)
BR11	Reserved	Reserved	Reserved	Reserved	Reserved	Reserved	Reserved	Reserved
BR12	Reserved	Reserved	Reserved	Reserved	Reserved	Reserved	Reserved	Reserved
BR13	Reserved	Reserved	Reserved	Reserved	Reserved	Reserved	Reserved	Reserved
BR14	Reserved	Reserved	Reserved	Reserved	Reserved	Reserved	Reserved	Reserved
BR15	Reserved	Reserved	Reserved	Reserved	Mask (3)	Mask (2)	Mask (1)	Mask (0)

3.4 BYTE REGISTERS

3.4.1 BR0

This register contains several miscellaneous control bits. All bits are cleared on hardware reset, but are unaffected by a software reset.

BYTE	b7	b6	b5	b4	b3	b2	b1	b0
BR0	EXT 256 kHz CLK rw	Mu/A LAW SELECT rw	ANALOG LOOPBACK rw	I/O MODE (1) rw	I/O MODE (0) rw	CHARGE PUMP DISABLE rw	ANALOG POWER DOWN rw	DIGITAL POWER DOWN rw

External 256 kHz Clock — This bit controls a mux that selects between an internal or external 256 kHz signal for clocking the PCM Codec block. When this bit is cleared the mux will select the 256 kHz clock from the internal clock generator block. When this bit is set, BCLKR is used to provide an external 256 kHz signal and the internal BCLKR signal will then be supplied from BCLKT.

Mu/A Law Select — This bit controls the compression for the encoder and the expansion for the decoder. Clearing this bit selects Mu-Law companding of the PCM data. Setting this bit selects A-Law companding of the PCM data.

Analog Loopback — Setting this bit enables the user to perform an Analog Loopback from the receive path to the transmit path. Internally the signal at the RO output is routed through an analog switch to the stage of the transmit path between the output of the TG op amp and the input to the transmit trim gain circuitry. The output of the TG op amp is disconnected from this node.

I/O Mode (1:0) — These bits are used to configure the MC145540 for different modes of operation and test (see Table 3-3). Two of the modes select whether the device will function as a combined ADPCM Codec (I/O Mode 00) or as a PCM Codec (I/O Mode 01). The third mode (I/O Mode 10) accommodates independent access to the output of the PCM A/D and the input to the ADPCM encoder. This permits the CCITT/ANSI ADPCM encoder and decoder test vectors to be run, as well as allowing for applications where the PCM data from the A/D may need to be externally processed before being encoded by the ADPCM encoder. The last mode (I/O Mode 11) allows the user to perform a battery test, effectively sampling the voltage present at the V_{EXT} pin. In this mode, the ADC is programmed to output a linear 8-bit PCM word for the voltage at V_{EXT} which is intended to be read in BR9 (b7:b0). The data format for the ADC output is the sign bit and seven magnitude bits. The sign bit is a “don’t care.” The scaling for the ADC is for 6.3 V at V_{EXT} equals full scale (BIN X111 1111). The ADPCM algorithm does not support dc signals.

Charge Pump Disable — Setting this bit disables the operation of the charge pump circuitry, which normally provides a charge pumped 5 V supply (derived from the V_{EXT} external supply) to the V_{DD} pin, which is also the power supply input for the analog blocks of the device. Disabling the charge pump will internally connect the V_{DD} pin to the V_{EXT} pin. See Section 2.4.1, *Power Supply Pins*, for further information.

Analog Power Down — When set, this bit forces a power down of the PCM Codec block and the charge pump. This causes the chip to enter a mode in which all clocks to the analog blocks are halted. This bit must be cleared before the PCM Codec block can function in its normal mode.

Digital Power Down — When set, this bit forces all clocks to the DSP Engine block to be halted. Clearing this bit will force the DSP Engine to come out of power down and execute an initialization procedure before starting to execute the ADPCM algorithm.

Table 3-3. Input/Output Modes

I/O Mode (1:0)	MC145540 Mode
0 0	ADPCM Codec
0 1	PCM Codec
1 0	CCITT Test
1 1	Battery Test

3.4.2 BR1

This register holds the values of the gain factors used in the transmit stage of the PCM Codec block, and in the generation of the sidetone signal that is fed back to the receive path. It also contains a bit to mute the signal going through the PCM Codec transmit path. All bits are cleared on hardware reset.

BYTE	b7	b6	b5	b4	b3	b2	b1	b0
BR1	RESERVED	SIDETONE GAIN (2) rw	SIDETONE GAIN (1) rw	SIDETONE GAIN (0) rw	TRANSMIT MUTE rw	TRANSMIT GAIN (2) rw	TRANSMIT GAIN (1) rw	TRANSMIT GAIN (0) rw

Sidetone Gain (2:0) — These three bits encode the gain factor to be applied to the sidetone signal before it is fed back to the receive stage of the PCM Codec block. The bit contents map to the gain factors in Table 3-4.

Transmit Mute — When set, this bit forces the transmit low-pass filter to apply infinite attenuation to its input signal, effectively muting the transmit path.

Transmit Trim Gain (2:0) — These three bits encode the gain factor to be applied to signals processed by the transmit stage of the PCM Codec block. The bit contents map to the gain factors in Table 3-5.

Table 3-4. Sidetone Gains

Sidetone Gain (2)	Sidetone Gain (1)	Sidetone Gain (0)	Sidetone Gain (dB)
0	0	0	– ∞
0	0	1	–21.5
0	1	0	–18.0
0	1	1	–15.0
1	0	0	–13.5
1	0	1	–11.5
1	1	0	–10.5
1	1	1	–8.0

Table 3-5. Transmit Analog Trim Gain

Transmit Trim Gain (2)	Transmit Trim Gain (1)	Transmit Trim Gain (0)	Transmit Trim Gain (dB)
0	0	0	0
0	0	1	+1
0	1	0	+2
0	1	1	+3
1	0	0	+4
1	0	1	+5
1	1	0	+6
1	1	1	+7

3.4.3 BR2

The contents of this register configure the operation of the receive section of the PCM Codec block. This register is cleared when a hardware reset is applied to the part.

BYTE	b7	b6	b5	b4	b3	b2	b1	b0
BR2	RO REFERENCE SELECT rw	AXO ENABLE rw	PO DISABLE rw	RECEIVE FILTER DISABLE rw	RO MUTE rw	ANALOG RECEIVE GAIN (2) rw	ANALOG RECEIVE GAIN (1) rw	ANALOG RECEIVE GAIN (0) rw

RO Reference Select — This bit selects the dc bias reference voltage for the analog outputs of the device. Clearing this bit sets the reference to its default value of $V_{EXT}/2$. Setting this bit sets the reference voltage of the single-ended output signal available at the RO output pin to V_{AG} (2.4 V). This bit also determines the reference level for the AXO and PO outputs.

Auxiliary Receive Output Enable — Clearing this bit disables the operation of the AXO block. When this bit is set, data coming out of the PCM Codec block will be available through the fully differential AXO+ and AXO– output pins of the part. These outputs are high impedance when not enabled or powered down.

Power Output Disable — Setting this bit disables the operation of the PO block. When this bit is cleared it enables the operation of a fully differential power output stage available through PI (input), PO+ and PO– (output). The PO block may also be disabled if the PI input is tied to V_{DD}. These outputs are high impedance when disabled or powered down.

Receive Filter Disable — Setting this bit disables the operation of the receive lowpass filter and allows the unfiltered D/A output to go to the RO or AXO driver(s). The sinX/X compensation is done in the receive lowpass filter, which is removed with this option. Note that the Analog Receive Gain (2) and (1) are disabled when this bit is set, bit (0) is still active for 1 dB.

RO Mute — Setting this bit grounds the input of the RO block, providing about 50 dB of attenuation to the signal. “Full Mute” can be established using the DRx Gain function provided in BR3. The RO block remains biased when the RO Mute bit is set in order to prevent audible “pop” when turning the block off and on.

Receive Analog Trim Gain — These three bits encode the gain factor to be applied to signals in the receive stage of the PCM Codec block. The bit contents map to the gain factors in Table 3-6.

Table 3-6. Receive Analog Trim Gain

Receive Analog Trim Gain (2)	Receive Analog Trim Gain (1)	Receive Analog Trim Gain (0)	Receive Analog Trim Gain (dB)
0	0	0	0
0	0	1	– 1
0	1	0	– 2
0	1	1	– 3
1	0	0	– 4
1	0	1	– 5
1	1	0	– 6
1	1	1	– 7

3.4.4 BR3

This register holds the gain factor for the scaled result of the ADPCM decoder output. A control bit to disable the Rx gain routine is also included. This register is cleared when a hardware reset is applied to the part. Write operations to this register are disabled when BR0 (b0) = 1 (Digital Power Down — active).

BYTE	b7	b6	b5	b4	b3	b2	b1	b0
BR3	DIGITAL RX GAIN ENABLE rw	DIGITAL RX GAIN (6) rw	DIGITAL RX GAIN (5) rw	DIGITAL RX GAIN (4) rw	DIGITAL RX GAIN (3) rw	DIGITAL RX GAIN (2) rw	DIGITAL RX GAIN (1) rw	DIGITAL RX GAIN (0) rw

Digital Receive Gain Enable — Setting this bit prevents the DSP Engine from executing the synchronous tandeming routine (CCITT/ANSI Sync function) and enables the execution of the routine that implements the digital receive gain. When this bit is cleared the CCITT/ANSI Sync function will be executed and the digital Rx gain will be set to unity.

Digital Receive Gain (6:0) — These bits hold the value of the linear gain factor to be applied to the decoded digital samples processed by the DSP Engine. This value is represented in the bit fields by the following summation: $(b6) \times 2^{1} + (b5) \times 2^{0} + (b4) \times 2^{-1} + (b3) \times 2^{-2} + (b2) \times 2^{-3} + (b1) \times 2^{-4} + (b0) \times 2^{-5}$. Two bits (b6:b5) contribute the integral part of the gain and five bits (b4:b0) contribute the fractional part of the gain. The field is a don't care when the Digital Receive Gain Enable bit is cleared. Table 3-7 provides three examples of gain settings and shows the weighting of each bit as it applies to the DRx function.

Table 3-7. Digital Receive Gain

	Integral Bits		Fractional Bits					Linear DRx Gain Factor
	b6	b5	b4	b3	b2	b1	b0	
Binary Weighting	2^{1}	2^{0}	2^{-1}	2^{-2}	2^{-3}	2^{-4}	2^{-5}	—
Decimal Equivalent	2	1	0.5	0.25	0.125	0.0625	0.03125	—
Example 1	0	0	1	0	0	0	0	0.5
Example 2	0	1	0	0	0	0	0	1.0
Example 3	1	1	1	1	1	1	1	3.96875

3.4.5 BR4

Registers BR4 and BR5 are used for entering parameter data for the tone generation function and the noise burst detect algorithm. The function of this register is controlled by BR5 (b7, b6) and BR7 (b7, b6, b3). This register is cleared when a hardware reset is applied to the part. Write operations to this register are disabled when BR0 (b0) = 1 (Digital Power Down — active).

BYTE	b7	b6	b5	b4	b3	b2	b1	b0
BR4	N.B. TIME (7)/ TONE PARAM. (7) rw	N.B. TIME (6)/ TONE PARAM. (6) rw	N.B. TIME (5)/ TONE PARAM. (5) rw	N.B. TIME (4)/ TONE PARAM. (4) rw	N.B. TIME (3)/ TONE PARAM. (3) rw	N.B. TIME (2)/ TONE PARAM. (2) rw	N.B. TIME (1)/ TONE PARAM. (1) rw	N.B. TIME (0)/ TONE PARAM. (0) rw

Noise Burst Detect Time Interval (7:0) — When the MC145540 is in the Noise Burst Detect Mode, BR7 (b6) = 1 and BR7 (b3) = 0, this register holds the time interval, in milliseconds, over which the audio energy is integrated. The format of the data word for time is integer binary. The recommended interval periods are from 20 ms (BIN 0001 0100) to 128 ms (BIN 1000 0000). See the descriptions for BR5 and BR7 for more information.

Tone Generator Parameter (7:0) — In the tone generation mode, BR7 (b3) = 1, this register is used to enter the eight LSBs of the tone generator frequency coefficient, or the tone attenuation factor. The MSBs of the tone generator coefficient or the tone attenuation factor are specified in BR5 (b3:b0). BR5 (b6) indicates whether the data is a tone coefficient or a tone attenuation factor. Bit BR5 (b7) indicates whether the data entered is for tone generator 1 or tone generator 2. See the descriptions for BR5 and BR7 for more information.

3.4.6 BR5

Registers BR4 and BR5 are used for entering parameter data for the tone generation function and the noise burst detect algorithm. This register is cleared when a hardware reset is applied to the part. Write operations to this register are disabled when BR0 (b0) = 1 (Digital Power Down — active).

BYTE	b7	b6	b5	b4	b3	b2	b1	b0
BR5	N.B. THRESHOLD (7)/ ADDRESS PARAM. (1) rw	N.B. THRESHOLD (6)/ ADDRESS PARAM. (0) rw	N.B. THRESHOLD (5)/ DON'T CARE rw	N.B. THRESHOLD (4)/ DON'T CARE rw	N.B. THRESHOLD (3)/TONE PARAM. (11) rw	N.B. THRESHOLD (2)/TONE PARAM. (10) rw	N.B. THRESHOLD (1)/TONE PARAM. (9) rw	N.B. THRESHOLD (0)/TONE PARAM. (8) rw

Noise Burst Detect Energy Threshold (7:0) — In the Noise Burst Detect Mode, BR7 (b6) = 1 and BR7 (b3) = 0, this register is used to enter the audio energy threshold value for the noise burst detect algorithm. The magnitude of the 13-bit decoded linear words are summed in increments of eight samples (1 ms of samples) to obtain a 24-bit value. The number of milliseconds is the value in BR4. When the number of milliseconds has been completed, the most significant 8 bits of the 24-bit total are compared with the value of BR5 to determine if there was more energy in the reconstructed ADPCM codes than normal voice. If the threshold (BR5) is exceeded, then BR7 (b6) will be set. After this decision is made the 24-bit total is cleared and the process starts over. For a change in the time interval (BR4), the threshold value (BR5) must be changed proportionally, to detect the same amount of energy in the received ADPCM. The microcontroller must poll BR7 (b6) and may attenuate the receive gain or mute the audio output if this bit is set. See BR7 description for more information.

Tone Generator Address Parameter (1:0) — In tone generation mode, BR7 (b3) = 1, this register is used to enter the four MSBs of the tone frequency coefficient, and the tone attenuation factor. BR5 (b6) indicates whether the data is a tone frequency coefficient or a tone attenuation factor. Bit BR5 (b7) indicates whether the data entered is for tone generator 1 or tone generator 2. Setting BR5 (b7:b6) results in the operation shown in Table 3-8.

Table 3-8. Tone Generator Address Parameters

b7 Tone Generator	b6 Tone Parameter	Resulting Operation
0	0	Tone Generator 1, Frequency Coefficient
0	1	Tone Generator 1, Tone Attenuation Factor
1	0	Tone Generator 2, Frequency Coefficient
1	1	Tone Generator 2, Tone Attenuation Factor

3.4.6 BR5 (continued)

Tone Generator Frequency Parameter (11:0) — These bits hold the value used to determine the frequency for tone generator 1 or tone generator 2. This value must be a 12-bit (2's complement) approximation of $\cos(2\pi f_O T)$, where f_O is the frequency of the tone and T is the period between samples (125 μs). The format of the data for the tone generator frequency coefficient is a 12-bit 2's complement number with bits (10:0) being the fractional part and bit (11) being the sign information. These frequency coefficients are limited to values between negative 1 (BIN 1.000 0000 0000 or HEX 08 00) and almost positive 1 (BIN 0.111 1111 1111 or HEX 07 FF). Table 3-9 shows the values that must be used to synthesize frequencies used in DTMF applications.

Table 3-9. Tone Generator Coefficients for DTMF

Tone Frequency (Hz)	Frequency Parameter (Hex)	
	BR5	BR4
697	06	D5
770	06	95
852	06	46
941	05	EA
1209	04	A8
1336	03	FC
1477	03	32
1633	02	46

Tone Generator Attenuation Parameter (11:0) — The attenuation parameter will determine the scaling on the amplitude of tones generated. The peak amplitude of the tones before attenuation is 13-bit linear full scale, which is full scale for the DAC output. In DTMF applications, this attenuation feature allows for the user to vary the twist of one tone with respect to the other, in order to comply with standard EIA-470. The attenuation parameter will be used to scale the amplitude of a sample produced by tone generator 1 or tone generator 2 before it is sent to the receive gain function in preparation for companding and conversion to an analog signal. The format of the data for the tone generator attenuation parameter is a 12-bit 2's complement number with bits (10:0) being the fractional part and bit (11) being the sign information. These attenuation parameters should be limited to positive values between zero (BIN 0.000 0000 0000 or HEX 00 00) and almost positive 1 (BIN 0.111 1111 1111 or HEX 07 FF). Note that this scaling will always result in the attenuation of the signal.

3.4.7 BR6

This register is reserved. The state of the bits BR6 (b7:b0) is inconsequential.

BYTE	b7	b6	b5	b4	b3	b2	b1	b0
BR6	RESERVED	RESERVED	RESERVED	RESERVED	RESERVED	RESERVED	RESERVED	RESERVED

3.4.8 BR7

This register contains the bits that enable the operation of both tone generators and the noise burst detect algorithm. BR7 also includes registers that determine whether two or six frame delay is to be used and which 16 kbps algorithm is to be selected. This register is cleared when a hardware reset is applied to the part (i.e., $\overline{PDI}/\overline{RESET}$ = 0). Write operations to this register are disabled when BR0 (b0) = 1 (Digital Power Down — active).

BYTE	b7	b6	b5	b4	b3	b2	b1	b0
BR7	TONE PARAM. STATUS ro	N.B. DETECT ENABLE ro/wo	2/6 DELAY rw	G.726/ MOTOROLA 16 kbps rw	TONE ENABLE rw	RESERVED	TONE 1 ENABLE rw	TONE 2 ENABLE rw

Tone Parameter Status — This read-only bit allows the external microcontroller to know when the data written to BR4 and BR5 has been accepted by the internal CPU. After writing to registers BR4 and BR5 (in this specific order) the external microcontroller must poll this bit and look for a logic 0 before writing again to BR4 and BR5. After writing to BR5 this bit will be set indicating to the internal CPU that a valid parameter was entered. The internal CPU will read the contents of BR4/BR5 before resetting this bit. See BR4 and BR5 for more information.

Noise Burst Detect Enable — This bit is a ro/wo (read only/write only) bit. This bit may be written to by the external microcontroller; however, the value that is read back by the external microcontroller is not necessarily the value previously written. Setting this bit will signal the internal CPU to start running the noise burst algorithm. If the noise burst detect algorithm finds that the received signal exceeds the threshold value, it will write to a register that can be read by polling this bit. This allows the possibility to temporarily mute or attenuate the receive path to prevent the noise burst from disturbing the listener. See BR4 and BR5 for more information.

2/6 Delay — This bit controls the amount of delay from an ADPCM rate change request at the encoder input register to the moment the correct output is observed at the DT output pin. When this bit is cleared there will be a two frame delay; if this bit is set a six frame delay will be applied.

G.726 / Motorola 16 kbps — This bit determines the coding scheme used when operating the part in a 16 kbps mode. Clearing this bit selects the G.726 defined 16 kbps coding algorithm. Setting this bit selects a Motorola Proprietary ADPCM coding algorithm, which is the 16 kbps algorithm used in the MC145532 ADPCM Transcoder.

Tone Enable — When this bit is set it tells this device to do four specific things. The first is to execute the tone generator routine instead of the ADPCM decoder routine. This disables the noise burst detect algorithm. The second is to select BR4 and BR5 for use in programing the frequency and attenuation parameters for the tone generators. The third is to route the tone generator output to the input of the receive digital gain control routine for analog reconstruction and use at the receive analog outputs of the device. The fourth is to route the tone generator output to the input of the ADPCM encoder for output at the DT pin. When this bit is low, coefficients for frequency and attenuation are lost.

Reserved — This bit is reserved.

Tone 1 Enable — This bit must be set in order to enable tone 1. This allows the digital samples from tone generator 1 to be added to the 13-bit linear word at the output of the tone generator function for use by the rest of the device. This bit must be taken low to reprogram the frequency of tone 1.

Tone 2 Enable — This bit must be set in order to enable tone 2. This allows the digital samples from tone generator 2 to be added to the 13-bit linear word at the output of the tone generator function for use by the rest of the device. This bit must be taken low to reprogram the frequency of tone 2.

3.4.9 BR8

This register contains miscellaneous control bits. This register is cleared when a hardware reset is applied to the part. Write operations to this register will be disabled when BR0 (b0) = 1 (Digital Power Down — active).

BYTE	b7	b6	b5	b4	b3	b2	b1	b0
BR8	SOFTWARE ENCODER RESET rw	SOFTWARE DECODER RESET rw	LINEAR CODEC MODE rw	HIGH-PASS DISABLE rw	RESERVED	RESERVED	RESERVED	RESERVED

Software Encoder Reset — When set by the SCP control port, this bit forces the MC145540 to execute an initialization procedure every time it receives an interrupt signal from the encoder I/O registers. This bit is cleared for normal operation.

Software Decoder Reset — When set by the SCP control port, this bit forces the MC145540 to execute an initialization procedure every time it receives an interrupt signal from the decoder I/O registers. This bit is cleared for normal operation.

Linear Codec Mode — Setting this bit will force the PCM Codec block to operate as an 8-bit Linear Codec. The A/D and D/A will be changed from Mu-Law or A-Law to 8-bit linear.

High-Pass Disable — Setting this bit disables the operation of the transmit high-pass filter. This extends the frequency response of the transmit analog signal path down to dc, which can result in higher quantization distortion if a dc offset voltage is present at the input to the encoder.

CAUTION

Reserved bits b3, b2, b1, and b0 must be set to zero at all times.

3.4.10 BR9

The read-only (ro) section of this SCP register allows the external microcontroller to have access to the PCM word generated after an A/D conversion. When the I/O MODE (1:0) field in BR0 (b4:b3) is set to a logic ‘10’ it will allow the external microcontroller to enter PCM data to the input of the ADPCM encoder using the write-only (wo) section of this SCP register. In this mode, external processing may be done on the A/D PCM word before it is encoded into an ADPCM word.

BYTE	b7	b6	b5	b4	b3	b2	b1	b0
BR9	ENCODER PCM (7) ro/wo	ENCODER PCM (6) ro/wo	ENCODER PCM (5) ro/wo	ENCODER PCM (4) ro/wo	ENCODER PCM (3) ro/wo	ENCODER PCM (2) ro/wo	ENCODER PCM (1) ro/wo	ENCODER PCM (0) ro/wo

3.4.11 BR10

This SCP register allows the external microcontroller to have access to the PCM word generated by the ADPCM decoder function. This PCM word is the same data that is sent to the PCM Codec to execute a D/A conversion.

BYTE	b7	b6	b5	b4	b3	b2	b1	b0
BR10	D/A PCM (7) ro	D/A PCM (6) ro	D/A PCM (5) ro	D/A PCM (4) ro	D/A PCM (3) ro	D/A PCM (2) ro	D/A PCM (1) ro	D/A PCM (0) ro

3.4.12 BR11

This register is reserved. The state of the bits BR11 (b7:b0) is inconsequential.

BYTE	b7	b6	b5	b4	b3	b2	b1	b0
BR11	RESERVED	RESERVED	RESERVED	RESERVED	RESERVED	RESERVED	RESERVED	RESERVED

3.4.13 BR12

This register is reserved. The state of the bits BR12 (b7:b0) is inconsequential.

BYTE	b7	b6	b5	b4	b3	b2	b1	b0
BR12	RESERVED	RESERVED	RESERVED	RESERVED	RESERVED	RESERVED	RESERVED	RESERVED

3.4.14 BR13

This register is reserved. The state of the bits BR13 (b7:b0) is inconsequential.

BYTE	b7	b6	b5	b4	b3	b2	b1	b0
BR13	RESERVED	RESERVED	RESERVED	RESERVED	RESERVED	RESERVED	RESERVED	RESERVED

3.4.15 BR14

This register is reserved. The state of the bits BR14 (b7:b0) is inconsequential.

BYTE	b7	b6	b5	b4	b3	b2	b1	b0
BR14	RESERVED	RESERVED	RESERVED	RESERVED	RESERVED	RESERVED	RESERVED	RESERVED

3.4.16 BR15

This register contains the revision number of the particular ADPCM Codec device.

BYTE	b7	b6	b5	b4	b3	b2	b1	b0
BR14	RESERVED	RESERVED	RESERVED	RESERVED	MASK 3 ro	MASK 2 ro	MASK 1 ro	MASK 0 ro

Mask 3:0 — These bits allow for an electronic determination of the revision number of the MC145540 ADPCM Codec manufacturing mask set.

4
ELECTRICAL SPECIFICATIONS

4.1 MAXIMUM RATINGS (Voltages Referenced to V_{SS} Pin)

Rating	Symbol	Value	Unit
DC Supply Voltage	V_{EXT}, V_{DD}	–0.5 to 6	V
Voltage on Any Analog Input or Output Pin		V_{SS} – 0.3 to V_{DD} + 0.3	V
Voltage on Any Digital Input or Output Pin		V_{SS} – 0.3 to V_{EXT} + 0.3	V
Operating Temperature Range	T_A	–40 to +85	°C
Storage Temperature Range	T_{stg}	–85 to +150	°C

4.2 POWER SUPPLY (T_A = –40 to +85°C, SPC = 20.48 MHz)

Characteristics	Min	Typ	Max	Unit
V_{EXT} = V_{DD} = 5.0 V, Charge Pump Off				
V_{EXT} = V_{DD} DC Supply Voltage	4.75	5.0	5.25	V
Active Power Dissipation (V_{EXT} = 5.0 V) (No Load, PI ≥ V_{DD} – 0.5 V, AXO+ and AXO– off) (No Load, PI ≤ V_{DD} – 1.5 V, AXO+ and AXO– on)	 — —	 80 85	 95 100	mW
Power Down Dissipation (V_{IH} for logic levels must be ≥ 3.0 V, SPC off)	—	2	20	mW
V_{EXT} = 3.0 V, Charge Pump On Supplying V_{DD}				
V_{EXT} DC Supply Voltage	2.7	3.0	5.25	V
Active Power Dissipation (V_{EXT} = 3.0 V) (No Load, PI ≥ V_{DD} – 0.5 V, AXO+ and AXO– off) (No Load, PI ≤ V_{DD} – 1.5 V, AXO+ and AXO– on)	 — —	 55 60	 70 75	mW
Power Down Dissipation (SPC off)	—	0.15	2.5	mW

4.3 DIGITAL LEVELS (V_{EXT} = 2.7 to 5.25 V, V_{SS} = 0 V, T_A = –40 to +85°C)

Characteristics		Symbol	Min	Max	Unit
Input Low Voltage	(FSR, FST, BCLKR, BCLKT, DR, SCP Rx, SCP CLK, $\overline{\text{SCP EN}}$)	V_{IL}	—	0.5	V
Input High Voltage	(FSR, FST, BCLKR, BCLKT, DR, SCP Rx, SCP CLK, $\overline{\text{SCP EN}}$)	V_{IH}	V_{EXT} – 0.5	—	V
Input Low Voltage	(SPC)	V_{IL}	—	0.5	V
Input High Voltage	(SPC)	V_{IH}	V_{EXT} – 0.5	—	V
Output Low Voltage (I_{OL} = 1.6 mA)	(DT)	V_{OL}	—	0.4	V
Output High Voltage (I_{OH} = – 1.6 mA)	(DT)	V_{OH}	V_{EXT} – 0.5	—	V
Input Low Current ($V_{SS} \le V_{in} \le V_{EXT}$)		I_{IL}	–10	+10	µA
Input High Current ($V_{SS} \le V_{in} \le V_{EXT}$)		I_{IH}	–10	+10	µA
Output Current in High Impedance State ($V_{SS} \le$ DT, SCP Tx $\le V_{EXT}$)	(DT, SCP Tx)	I_{OZ}	–10	+10	µA
Output Low Voltage (I_{OL} = 0.8 mA)	(SCP Tx)	V_{OL}	—	0.4	V
Output High Voltage (I_{OH} = – 0.8 mA)	(SCP Tx)	V_{OH}	V_{EXT} – 0.5	—	V
Input Capacitance	(FSR, FST, BCLKR, BCLKT, DR, SCP Rx, SCP CLK, $\overline{\text{SCP EN}}$)	C_{in}	—	10	pF
Output Capacitance	(DT, SCP Tx)	C_{out}	—	15	pF

4.4 ANALOG ELECTRICAL CHARACTERISTICS

($V_{EXT} = V_{DD}$ = 5 V ±5%; Charge Pump Off, V_{SS} = 0 V, BR2 (b7) = 1, T_A = –40 to +85°C)

Characteristics		Min	Typ	Max	Unit
Input Current	TI+, TI–	—	±0.1	±1.0	µA
AC Input Impedance to V_{AG} (1 kHz)	TI+, TI–	—	1.0	—	MΩ
Input Capacitance	TI+, TI–	—	—	10	pF
Input Offset Voltage of TG Op Amp	TI+, TI–	—	—	±5	mV
Input Common Mode Voltage Range	TI+, TI–	1.0	—	V_{DD} – 2.0	V
Input Common Mode Rejection Ratio	TI+, TI–	—	60	—	dB
Gain Bandwidth Product (10 kHz, $R_L \ge$ 10 kΩ)	TG Op Amp	—	3000	—	kHz
DC Open Loop Gain ($R_L \ge$ 10 kΩ)	TG Op Amp	80	95	—	dB
Equivalent Input Noise (C-Mess) Between TI+ and TI– at TG		—	–30	—	dBrnC
Output Load Capacitance	TG Op Amp	0	—	100	pF
Output Voltage Range (R_L = 10 kΩ to V_{AG}) (R_L = 2 kΩ to V_{AG})	TG	 0.5 1.0	 — —	 V_{DD} – 0.5 V_{DD} – 1.0	V
Output Current (0.5 V $\le V_{out} \le V_{DD}$ – 0.5 V)	TG, RO	±1.0	—	—	mA
Output Load Resistance to V_{AG}	TG or RO	2	—	—	kΩ
Output Impedance (0 to 3.4 kHz)	RO	—	1	—	Ω
Output Load Capacitance	RO	0	—	500	pF
DC Output Offset Voltage of RO referenced to V_{AG}		—	±1	±25	mV
V_{AG} Output Voltage referenced to V_{SS}		2.1	2.4	2.6	V
V_{AG} Output Current with less than 40 mV change in Output Voltage		±2	±5	—	mA
Power Supply Rejection Ratio (0 to 100 kHz @ 100 mVrms applied to V_{DD}. C-Message Weighting. All analog signals referenced to V_{AG} pin.)	Transmit Receive	— 50	40 75	— —	dBC

4.5 POWER DRIVERS PI, PO+, PO–, AXO+, AXO–

(V_{EXT} = V_{DD} = 5 V ±5%; Charge Pump Off, V_{SS} = 0 V, BR2 (b7) = 1, T_A = –40 to +85°C)

Characteristics		Min	Typ	Max	Unit
Input Current (V_{AG} – 0.5 V ≤ PI ≤ V_{AG} + 0.5 V)	PI	—	±0.05	±1.0	µA
Input Resistance (V_{AG} – 0.5 V ≤ PI ≤ V_{AG} + 0.5 V)	PI	10	—	—	MΩ
Input Offset Voltage PI relative to V_{AG}		—	—	±25	mV
Output Offset Voltage of AXO+ relative to AXO–		—	±5	±60	mV
Output Offset Voltage of AXO+ or AXO– relative to V_{AG}		—	±50	±150	mV
Output Offset Voltage of PO+ relative to PO– (Inverted Unity Gain for PO–)		—	±50	±175	mV
Output Offset Voltage for PO+ or PO– relative to V_{AG} (Inverted Unity Gain for PO–)		—	±30	±120	mV
Output Current (V_{SS} + 0.7 V ≤ PO+, PO–, AXO+, AXO– ≤ V_{DD} – 0.7 V)		±10	—	—	mA
PO+, PO–, AXO+ or AXO– Output Resistance (Inverted Unity Gain for PO–)		—	1	—	Ω
Gain Bandwidth Product (10 kHz, Open Loop)	PO–	—	1000	—	kHz
Load Capacitance PO+, PO–, AXO+ or AXO– to V_{AG}, or from PO+ (AXO+) to PO– (AXO–)		0	—	1000	pF
Gain of PO+ relative to PO–		–0.2	0	+0.2	dB
Total Signal to Distortion at PO+ (AXO+) and PO– (AXO–) with a 300 Ω differential load		40	50	—	dBC
Power Supply Rejection Ratio (0 to 25 kHz @ 100 mVrms applied to V_{EXT}, PO– connected to PI. Differential or measured referenced to V_{AG} pin.)	0 to 4 kHz 4 to 25 kHz	40 —	55 40	— —	dB

NOTE: DC reference voltage for PO+, PO–, AXO+, AXO–, and RO is V_{AG}.

4.6 ANALOG ELECTRICAL CHARACTERISTICS

(V_{EXT} = 3.0 V ±10%; Charge Pump On Supplying V_{DD}, V_{SS} = 0 V, BR2 (b7) = 0, T_A = –40 to +85°C)

Characteristics		Min	Typ	Max	Unit
Input Current	TI+, TI–	—	±0.01	±1.0	µA
AC Input Impedance to V_{AG} (1 kHz)	TI+, TI–	—	1.0	—	MΩ
Input Capacitance	TI+, TI–	—	—	10	pF
Input Offset Voltage of TG Op Amp	TI+, TI–	—	—	±5	mV
Input Common Mode Voltage Range	TI+, TI–	1.0	—	V_{DD} – 2.0	V
Input Common Mode Rejection Ratio	TI+, TI–	—	60	—	dB
Gain Bandwidth Product (10 kHz, $R_L \geq$ 10 kΩ)	TG Op Amp	—	3000	—	kHz
DC Open Loop Gain ($R_L \geq$ 10 kΩ)	TG Op Amp	80	95	—	dB
Equivalent Input Noise (C-Mess) Between TI+ and TI– at TG		—	–30	—	dBrnC
Output Load Capacitance	TG Op Amp	0	—	100	pF
Output Voltage Range (R_L = 10 kΩ to V_{AG}) (R_L = 2 kΩ to V_{AG})	TG	 0.5 1.0	 — —	 V_{DD} – 0.5 V_{DD} – 1.0	V
Output Current (0.5 V $\leq V_{out} \leq$ V_{DD} – 0.5 V)	TG, RO	±1.0	—	—	mA
Output Load Resistance to V_{AG}	TG or RO	2	—	—	kΩ
Output Impedance (0 to 3.4 kHz)	RO	—	1	—	Ω
Output Load Capacitance	RO	0	—	500	pF
DC Output Voltage of RO		—	V_{EXT}/2	—	mV
V_{AG} Output Voltage referenced to V_{SS}		2.1	2.4	2.6	V
V_{AG} Output Current with less than 40 mV change in Output Voltage		—	±1	—	mA
Power Supply Rejection Ratio (0 to 100 kHz @ 100 mVrms applied to V_{DD}. C-Message Weighting. All analog signals referenced to V_{AG} pin.)	Transmit Receive	— —	40 50	— —	dBC

NOTE: To prevent the RO output from distorting during the reconstruction of large analog amplitudes, the receive signal should be attenuated by 6 dB for 2.7 V operation.

4.7 POWER DRIVERS PI, PO+, PO–, AXO+, AXO–

(V_{EXT} = 3.0 V = ±10%; Charge Pump On Supplying V_{DD}, V_{SS} = 0 V, BR2 (b7) = 0, T_A = –40 to +85°C)

Characteristics		Min	Typ	Max	Unit
Input Current (V_{EXT}/2) – 0.5 V ≤ PI ≤ (V_{EXT}/2) + 0.5 V	PI	—	±0.05	±1.0	µA
Input Resistance (V_{EXT}/2) – 0.5 V ≤ PI ≤ (V_{EXT}/2) + 0.5 V	PI	10	—	—	MΩ
Input Offset Voltage PI relative to (V_{EXT}/2)		—	—	±25	mV
Output Offset Voltage of AXO+ relative to AXO–		—	±5	±55	mV
DC Output Voltage of AXO+ or AXO–		—	V_{EXT}/2	—	V
Output Offset Voltage of PO+ relative to PO– (Inverted Unity Gain for PO–)		—	±5	±120	mV
DC Output Voltage of PO+ or PO–		—	V_{EXT}/2	—	V
Output Current (V_{SS} + 0.5 V ≤ PO+, PO–, AXO+, AXO– ≤ V_{EXT} – 0.5 V)		—	±3.5	—	mA
PO+, PO–, AXO+ or AXO– Output Resistance (Inverted Unity Gain for PO–)		—	1	—	Ω
Gain Bandwidth Product @ 10 kHz (Open Loop)	PO–	—	1000	—	kHz
Load Capacitance PO+ to PO–, AXO+ to AXO–		0	—	1000	pF
Gain of PO+ (AXO+) relative to PO– (AXO–)		–0.2	0	+0.2	dB
Total Signal to Distortion at PO+ (AXO+) and PO– (AXO–) with a 300 Ω differential load		40	50	—	dBC
Power Supply Rejection Ratio (0 to 25 kHz @ 100 mVrms applied to V_{EXT}. PO– connected to PI. Differentially measured.)	0 to 4 kHz 4 to 25 kHz	30 —	45 40	— —	dB

NOTE: DC reference voltage for AXO+, AXO–, PO+, PO–, and RO is V_{EXT}/2.

4.8 ANALOG TRANSMISSION PERFORMANCE

(V_{DD} = 5 V ±5% Powered by the Charge Pump or Externally; V_{SS} = 0 V; All Analog Signals Referenced to V_{AG}; 0 dBm0 = 0.775 Vrms = + 0 dBm @ 600 Ω; 64 kbps PCM; FST = FSR = 8 kHz; BCLKT = BCLKR = 2.048 MHz; SPC = 20.48 MHz Synchronous Operation; T_A = –40 to +85°C; Unless Otherwise Noted)

Characteristics	End to End		A/D		D/A		Unit
	Min	Max	Min	Max	Min	Max	
Absolute Gain (0 dBm0 @ 1.02 kHz, T_A = 25°C)							dB
V_{DD} = 5.0 V	—	—	–0.25	0.25	–0.25	0.25	
Absolute Gain Variation with Temperature							dB
0° to + 70°C	—	—	—	±0.03	—	±0.03	
–40° to + 85°C	—	—	—	±0.05	—	±0.05	
Absolute Gain Variation with Power Supply							dB
V_{DD} = 5 V, ± 5%	—	—	—	±0.03	—	±0.04	
Gain vs Level Tone +3 to –40 dBm0	—	—	–0.3	+ 0.3	–0.2	+0.2	dB
(Mu-Law, Relative to –40 to –50 dBm0	—	—	–1.0	+ 1.0	–0.4	+0.4	
– 10 dBm0, 1.02 kHz) –50 to –55 dBm0	—	—	–1.6	+ 1.6	–0.8	+0.8	
Gain vs Level Pseudo Noise, CCITT G.714							dB
(A-Law relative to –10 to –40 dBm0	—	—	–0.25	+ 0.25	–0.25	+0.25	
– 10 dBm0) –40 to –50 dBm0	—	—	–0.60	+ 0.30	–0.30	+0.30	
–50 to –55 dBm0	—	—	–1.0	+ 0.45	–0.45	+0.45	
Total Distortion, 1.02 kHz Tone +3 dBm0	33	—	34	—	34	—	dBC
(Mu-Law, 0 to –30 dBm0	35	—	36	—	36	—	
C-Message Weighting) –40 dBm0	28	—	29	—	30	—	
–45 dBm0	24	—	25	—	25	—	
Total Distortion Pseudo Noise, CCITT G.714 (A-Law)							dB
–3 dBm0	27.5	—	28	—	28.5	—	
–6 to –27 dBm0	35.0	—	35.5	—	36.0	—	
–34 dBm0	33.1	—	33.5	—	34.2	—	
–40 dBm0	28.2	—	28.5	—	30.0	—	
–55 dBm0	13.2	—	13.5	—	15.0	—	
Idle Channel Noise (for End-to-End and A/D, Note 1)							
Mu-Law, C-Message Weighted	—	19	—	19	—	11	dBrnC0
A-Law, Psophometric Weighted	—	–70	—	– 70	—	–78	dBm0p
Frequency Response 15 Hz	—	—	—	– 40	–0.5	0	dB
(Relative to 1.02 kHz @ 0 dBm0) 50 Hz	—	—	—	– 30	–0.5	0	
60 Hz	—	—	—	– 26	–0.5	0	
200 Hz	—	—	–1.0	– 0.4	–0.5	0	
300 to 3000 Hz	—	—	–0.20	+ 0.15	–0.20	+0.15	
3300 Hz	—	—	–0.35	+ 0.15	–0.35	+0.15	
3400 Hz	—	—	–0.8	0.0	–0.8	0	
4000 Hz	—	—	—	– 14	—	–14	
4600 to 100,000 Hz	—	—	—	– 32	—	–30	
Inband Spurious (1.02 kHz @ 0 dBm0,							dB
Transmit and Receive) 300 to 3000 Hz	—	–48	—	– 48	—	–48	
Out-of-Band Spurious at RO+							dB
(300 to 3400 Hz @ 0 dBm0 in)							
4600 to 7600 Hz	—	–30	—	—	—	–30	
7600 to 8400 Hz	—	–40	—	—	—	–40	
8400 to 100,000 Hz	—	–30	—	—	—	–30	
Idle Channel Noise Selective @ 8 kHz,	—	–70	—	—	—	–70	dBm0
Input = V_{AG}, 30 Hz Bandwidth							
Absolute Delay @ 1600 Hz	—	—	—	440	—	330	µs

NOTE: 1. Extrapolated from a 1020 Hz @ –50 dBm0 distortion measurement to correct for encoder enhancement.

(continued)

4.8 ANALOG TRANSMISSION PERFORMANCE (continued)

Characteristics	End to End		A/D		D/A		Unit
	Min	Max	Min	Max	Min	Max	
Group Delay Referenced to 1600 Hz							µs
500 to 600 Hz	—	—	—	210	–40	—	
600 to 800 Hz	—	—	—	130	–40	—	
800 to 1000 Hz	—	—	—	70	–40	—	
1000 to 1600 Hz	—	—	—	35	–30	—	
1600 to 2600 Hz	—	—	—	70	—	85	
2600 to 2800 Hz	—	—	—	95	—	110	
2800 to 3000 Hz	—	—	—	145	—	175	
Crosstalk of 1020 Hz @ 0 dBm0 from A/D or D/A (Note 2)	—	—	—	–70	—	–70	dB
Intermodulation Distortion of two Frequencies of Amplitudes – 4 to – 21 dBm0 from the range 300 to 3400 Hz	—	–41	—	–41	—	–41	dB

NOTE: 2. Selectively measured while stimulated with 2667 Hz @ – 50 dBm0.

4.9 DIGITAL SWITCHING CHARACTERISTICS, LONG FRAME SYNC AND SHORT FRAME SYNC

(V_{EXT} = +2.7 V to +5.25 V, V_{SS} = 0 V, All Digital Signals Referenced to V_{SS}, T_A = –40 to +85°C, C_L = 150 pF, Unless Otherwise Noted)

Ref #	Characteristics	Min	Typ	Max	Unit
	Signal Processing Clock (SPC) Frequency (see Note)	20.40	20.48	23.12	MHz
	Signal Processing Clock (SPC) Duty Cycle	45	50	55	%
1	Master Clock (MCLK) Frequency for External 256 kHz applied at BCLKR pin	—	256	—	kHz
2, 3	Master Clock (MCLK) Duty Cycle for External 256 kHz applied at BCLKR pin	45	—	55	%
4	Rise Time for All Digital Signals	—	—	50	ns
5	Fall Time for All Digital Signals	—	—	50	ns
6	Bit Clock Data Rate for BCLKT or BCLKR	64	—	5120	kHz
7	Minimum Pulse Width High for BCLKT or BCLKR	50	—	—	ns
8	Minimum Pulse Width Low for BCLKT or BCLKR	50	—	—	ns
9	Hold Time for BCLKT (BCLKR) Low to FST (FSR) High	20	—	—	ns
10	Setup Time for FST (FSR) High to BCLKT (BCLKR) Low	80	—	—	ns
11	Setup Time for DR Valid to BCLKR Low	20	—	—	ns
12	Hold Time from BCLKR Low to DR Invalid	50	—	—	ns
	LONG FRAME SPECIFIC TIMING				
15	Hold Time from 2nd Period of BCLKT (BCLKR) Low to FST (FSR) Low	50	—	—	ns
16	Delay Time from FST or BCLKT, Whichever is Later, to DT for Valid b0 Data	—	—	60	ns
17	Delay Time from BCLKT High to DT for Valid b1 – b7	—	—	60	ns
18	Delay Time from BCLKT Low to DT Output High Impedance	10	—	60	ns
19	Minimum Pulse Width Low for FST or FSR	100	—	—	ns
	SHORT FRAME SPECIFIC TIMING				
20	Hold Time from BCLKT (BCLKR) Low to FST (FSR) Low	50	—	—	ns
21	Setup Time from FST (FSR) Low to b0 Period of BCLKT (BCLKR) Low	50	—	—	ns
22	Delay Time from BCLKT High to DT Data Valid	10	—	60	ns
23	Delay Time from the 4th BCLKT Low to DT Output High Impedance	10	—	60	ns

NOTE: See section 2.2.6 for more details.

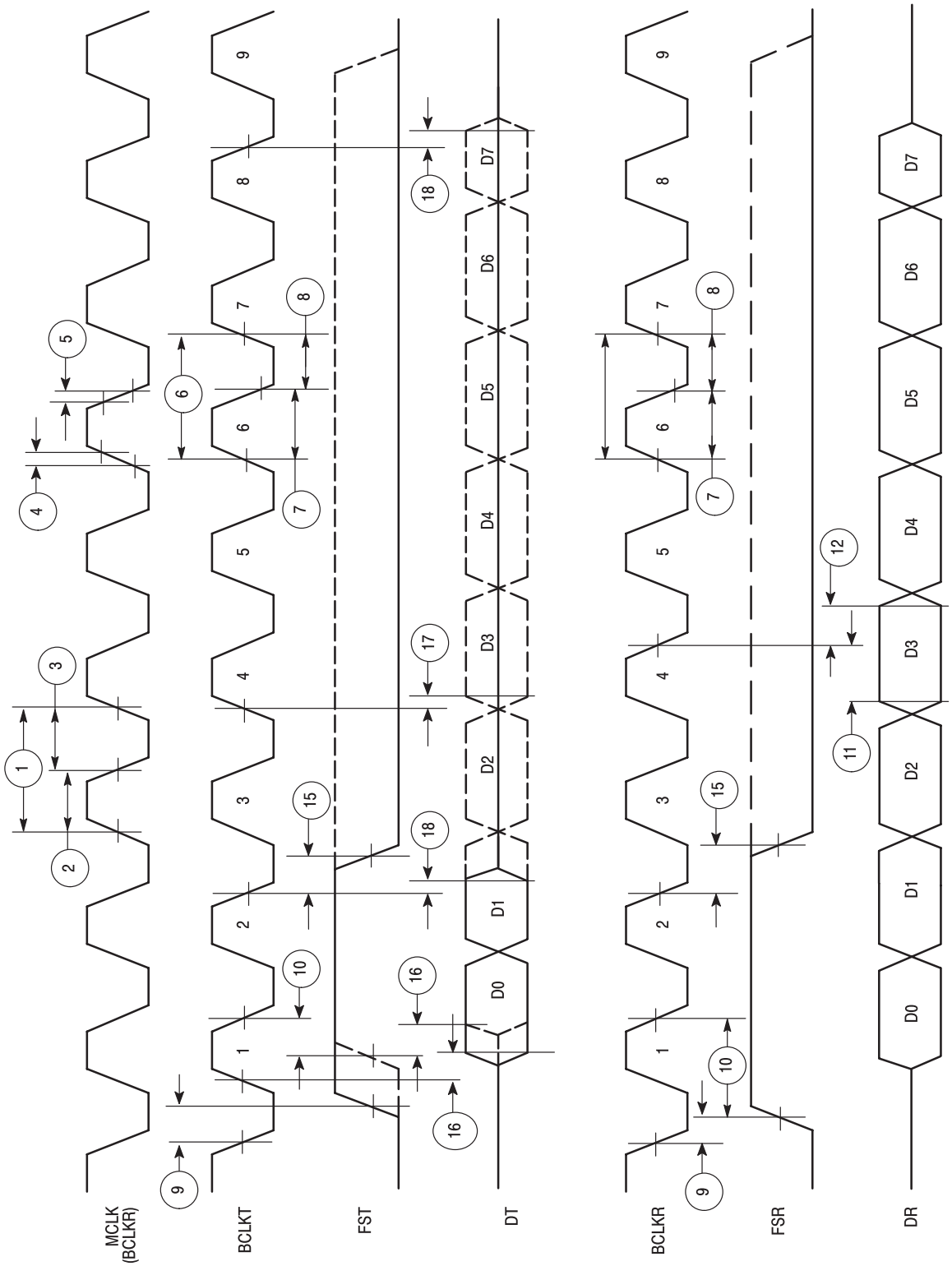

Figure 4-1. MC145540 Long Frame Sync Timing

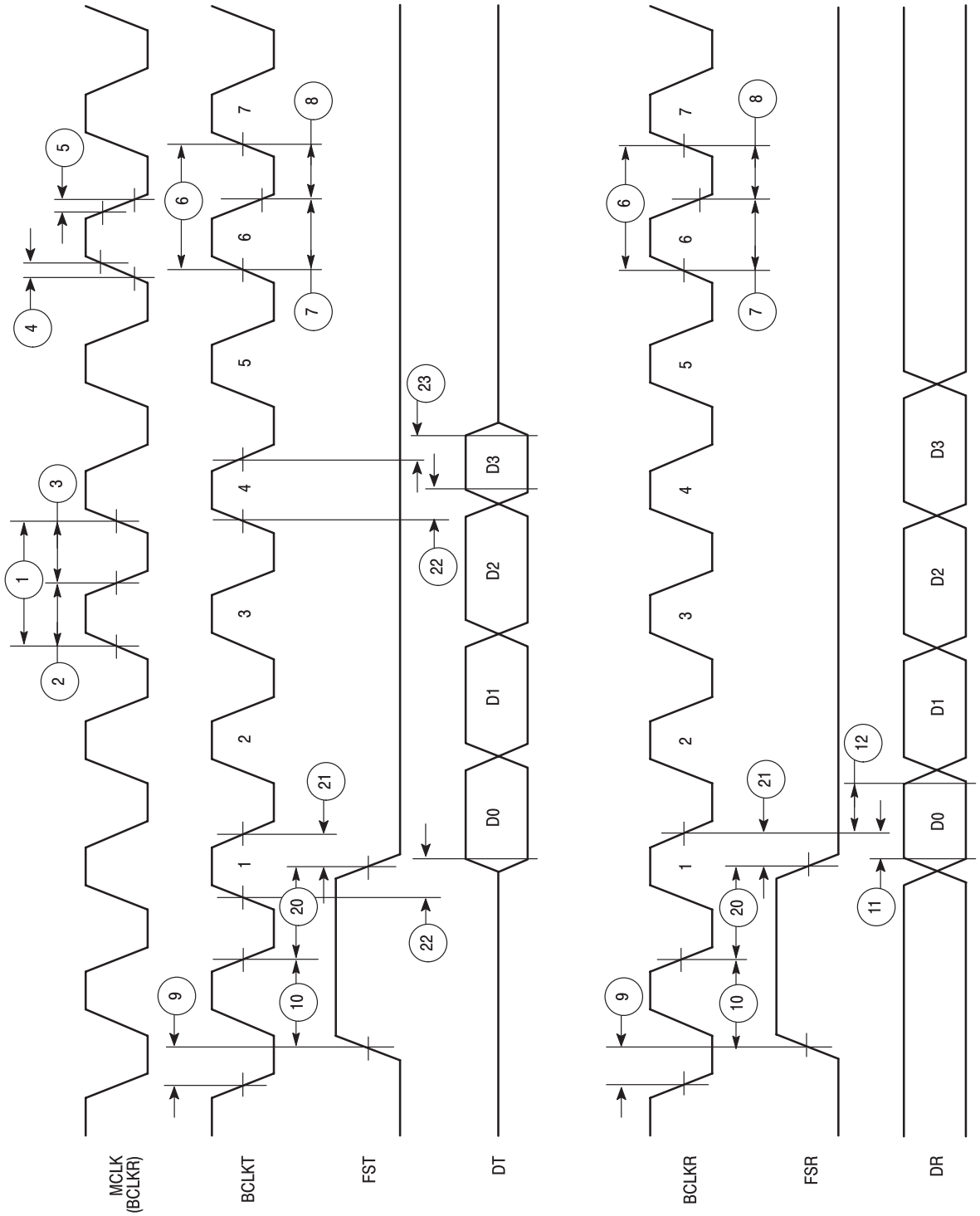

Figure 4-2. MC145540 Short Frame Sync Timing

4.10 DIGITAL SWITCHING CHARACTERISTICS — SERIAL CONTROL PORT (SCP)

(V_{EXT} = +2.7 V to +5.25 V, V_{SS} = 0 V, All Digital Signals Referenced to V_{SS}, T_A = –40 to +85°C, C_L = 150 pF, Unless Otherwise Noted; Note 1)

Ref #	Characteristics	Min	Max	Unit
25	SCP CLK Rising Edge Before $\overline{\text{SCP EN}}$ Falling Edge	40	—	ns
26	$\overline{\text{SCP EN}}$ Falling Edge Before SCP CLK Rising Edge	30	—	ns
27	SCP Rx Data Valid Before SCP CLK Rising Edge	30	—	ns
28	SCP Rx Data Valid After Rising Edge of SCP CLK	30	—	ns
29	SCP Clock Frequency	—	4.1	MHz
30	SCP Clock Width Low	50	—	ns
31	SCP Clock Width High	50	—	ns
32	SCP CLK Rising Edge Before $\overline{\text{SCP EN}}$ Rising Edge (Note 2)	50	—	ns
33	$\overline{\text{SCP EN}}$ Rising Edge Before SCP CLK Rising Edge (Note 2)	50	—	ns
34	Ninth SCP CLK Falling Edge to SCP Tx Low-Impedance for Read Operations	—	40	ns
35	SCP CLK Falling Edge (While $\overline{\text{SCP EN}}$ is Low) to SCP Tx Data Valid for Read Operations	—	40	ns
36	$\overline{\text{SCP EN}}$ Falling Edge to SCP Tx Active for Read Operations with 8-Bit Transfers	0	50	ns
37	$\overline{\text{SCP EN}}$ Rising Edge to SCP Tx High-Impedance	—	30	ns

NOTES: 1. Measurements are made from the point at which they achieve their guaranteed minimum or maximum logic levels.
2. $\overline{\text{SCP EN}}$ must rise between the rising edge of the eighth SCP CLK and the rising edge of the ninth SCP CLK for an 8-bit access or the access will be ignored. For a 16-bit access, $\overline{\text{SCP EN}}$ must rise between the rising edge of the sixteenth SCP CLK and the rising edge of the seventeenth SCP CLK or the access will be ignored.

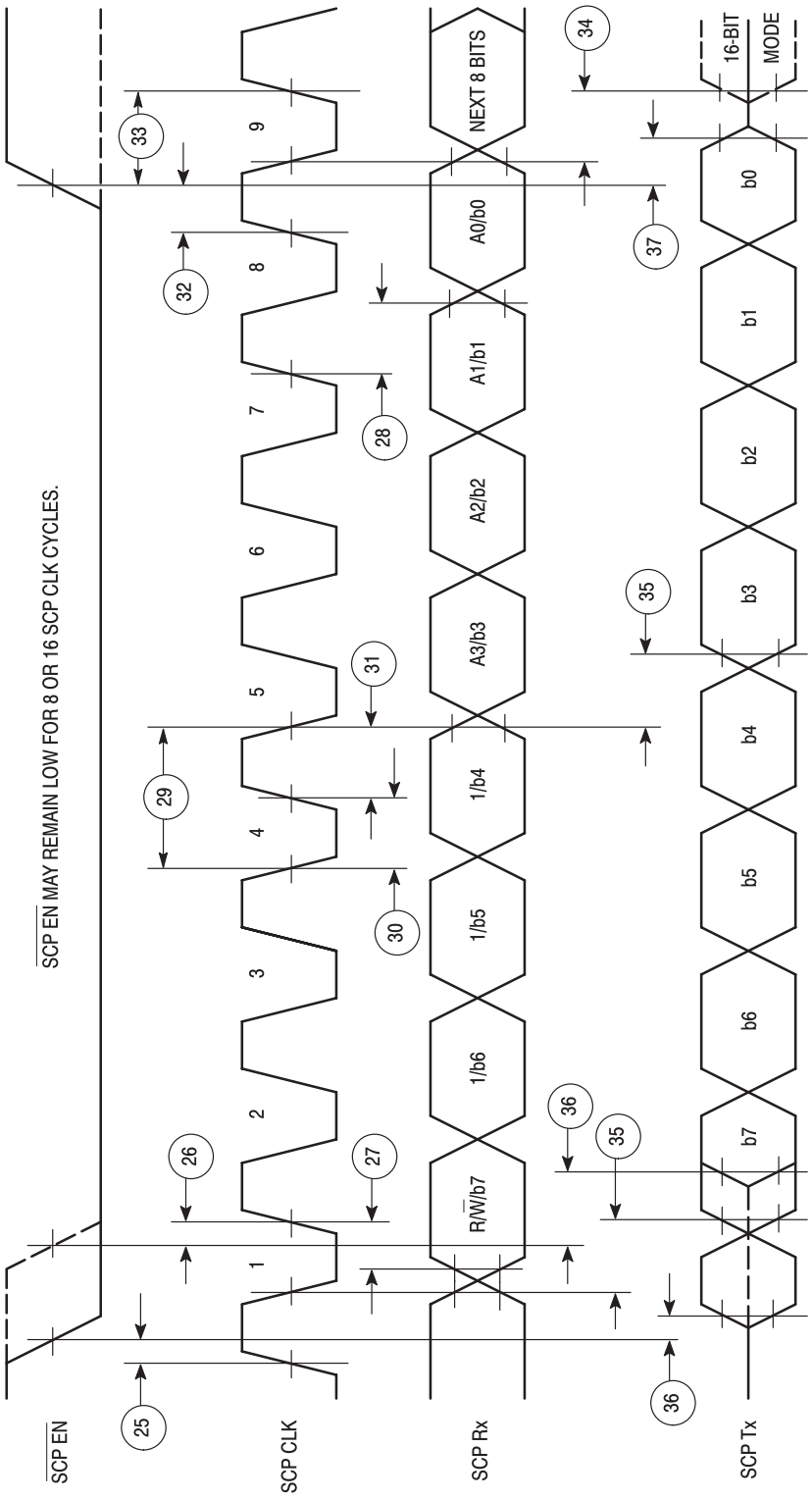

Figure 4-3. MC145540 Serial Control Port (SCP) Timing

5
PACKAGE DIMENSIONS

MC145540P
28-LEAD PLASTIC DIP
CASE 710-02

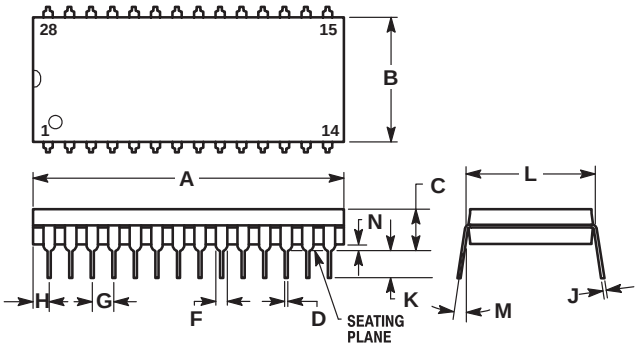

NOTES:
1. POSITIONAL TOLERANCE OF LEADS (D), SHALL BE WITHIN 0.25mm (0.010) AT MAXIMUM MATERIAL CONDITION, IN RELATION TO SEATING PLANE AND EACH OTHER.
2. DIMENSION L TO CENTER OF LEADS WHEN FORMED PARALLEL.
3. DIMENSION B DOES NOT INCLUDE MOLD FLASH.
4. 710-01 OBSOLETE, NEW STANDARD 710-02.

	MILLIMETERS		INCHES	
DIM	MIN	MAX	MIN	MAX
A	36.45	37.21	1.435	1.465
B	13.72	14.22	0.540	0.560
C	3.94	5.08	0.155	0.200
D	0.36	0.56	0.014	0.022
F	1.02	1.52	0.040	0.060
G	2.54 BSC		0.100 BSC	
H	1.65	2.16	0.065	0.085
J	0.20	0.38	0.008	0.015
K	2.92	3.43	0.115	0.135
L	15.24 BSC		0.600 BSC	
M	0°	15°	0°	15°
N	0.51	1.02	0.020	0.040

Figure 5-1. Plastic DIP Dimensions

MC145540DW
28-LEAD WIDE BODY PLASTIC SOG
CASE 751F-03

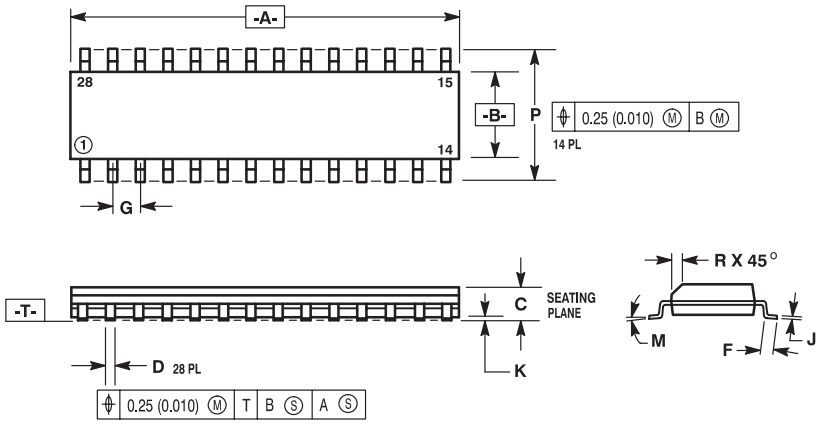

NOTES:
1. DIMENSIONS A AND B ARE DATUMS AND T IS A DATUM SURFACE.
2. DIMENSIONING AND TOLERANCING PER ANSI Y14.5M, 1982.
3. CONTROLLING DIMENSION: MILLIMETER.
4. DIMENSION A AND B DO NOT INCLUDE MOLD PROTRUSION.
5. MAXIMUM MOLD PROTRUSION 0.15 (0.006) PER SIDE.

	MILLIMETERS		INCHES	
DIM	MIN	MAX	MIN	MAX
A	17.80	18.05	0.701	0.711
B	7.40	7.60	0.292	0.299
C	2.35	2.65	0.093	0.104
D	0.35	0.49	0.014	0.019
F	0.41	0.90	0.016	0.035
G	1.27 BSC		0.050 BSC	
J	0.229	0.317	0.0090	0.0125
K	0.127	0.292	0.0050	0.0115
M	0°	8°	0°	8°
P	10.05	10.55	0.395	0.415
R	0.25	0.75	0.010	0.029

Figure 5-2. Plastic SOG Dimensions

6
APPLICATION CIRCUITS

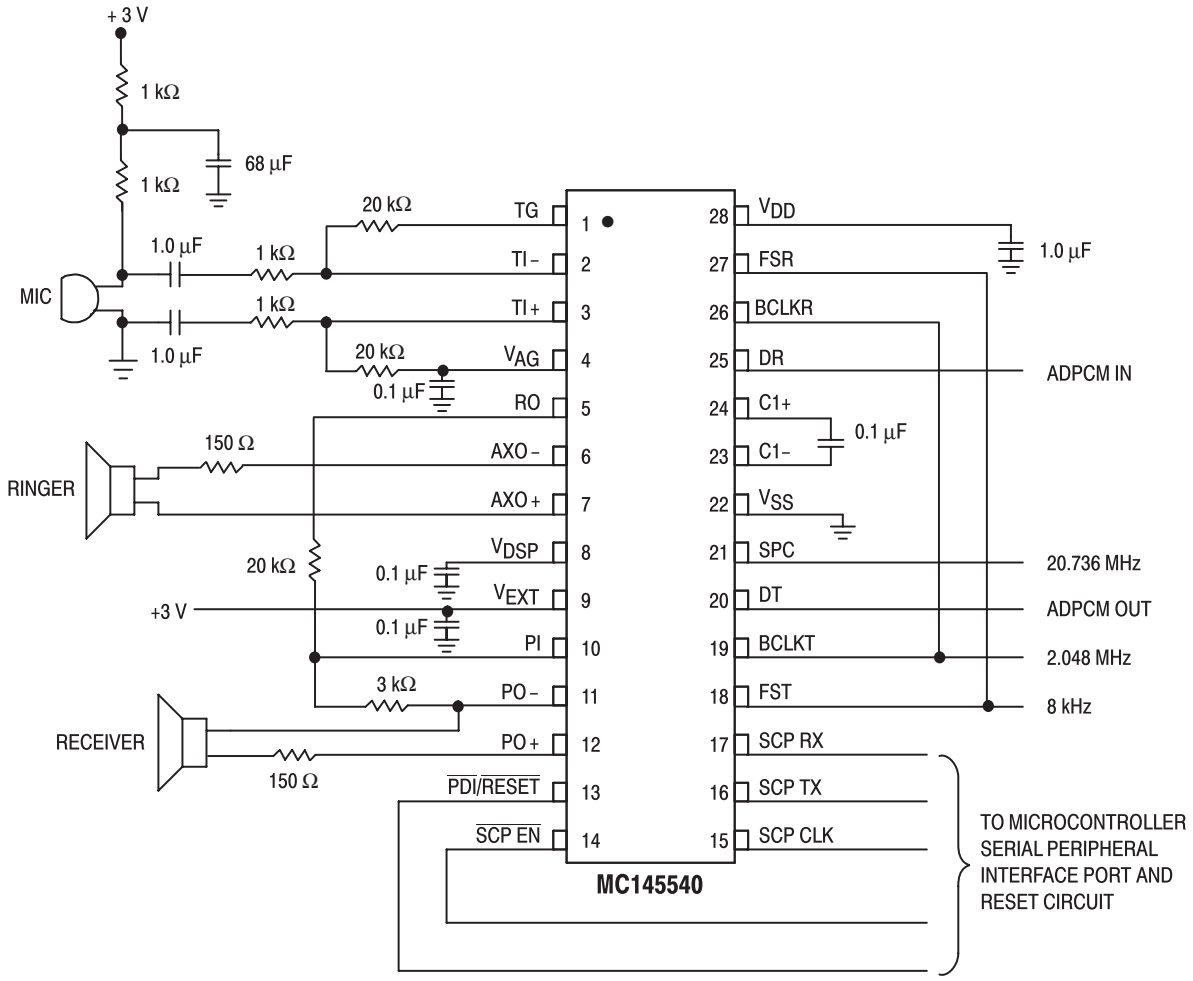

Figure 6-1. MC145540 Handset Application

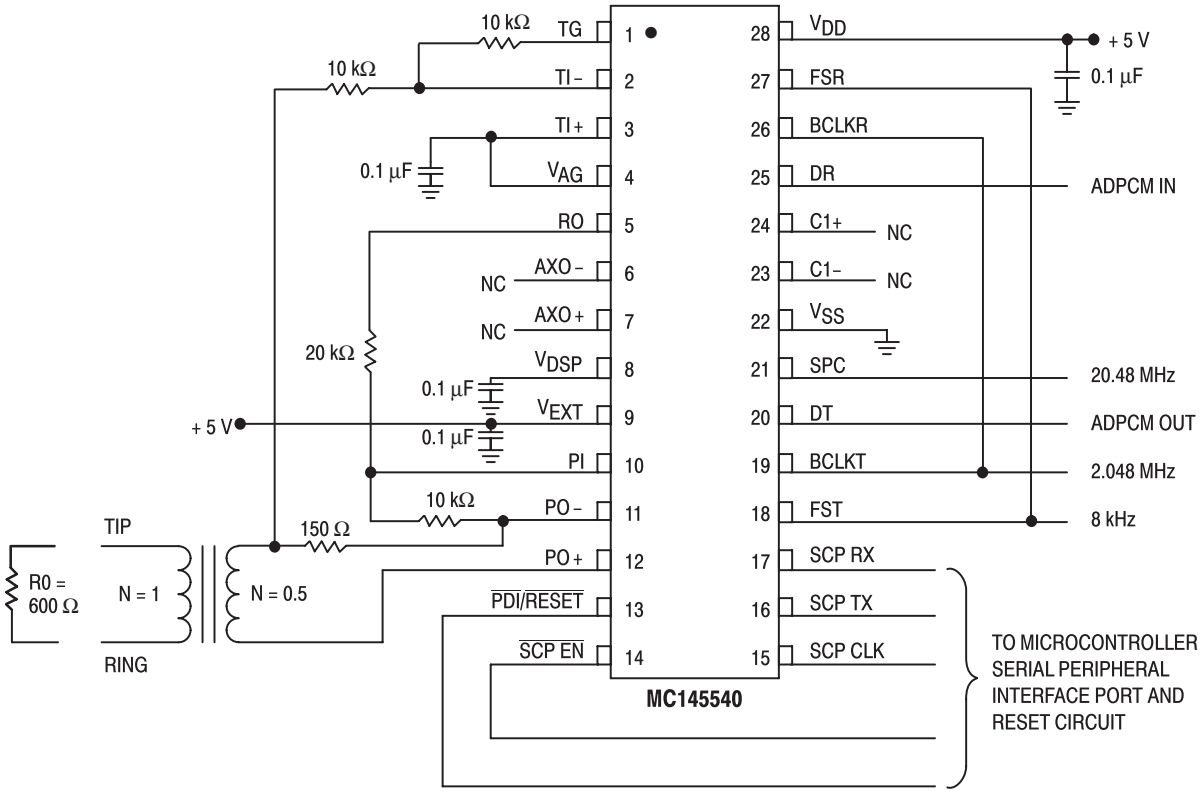

Figure 6-2. MC145540 Transformer Application

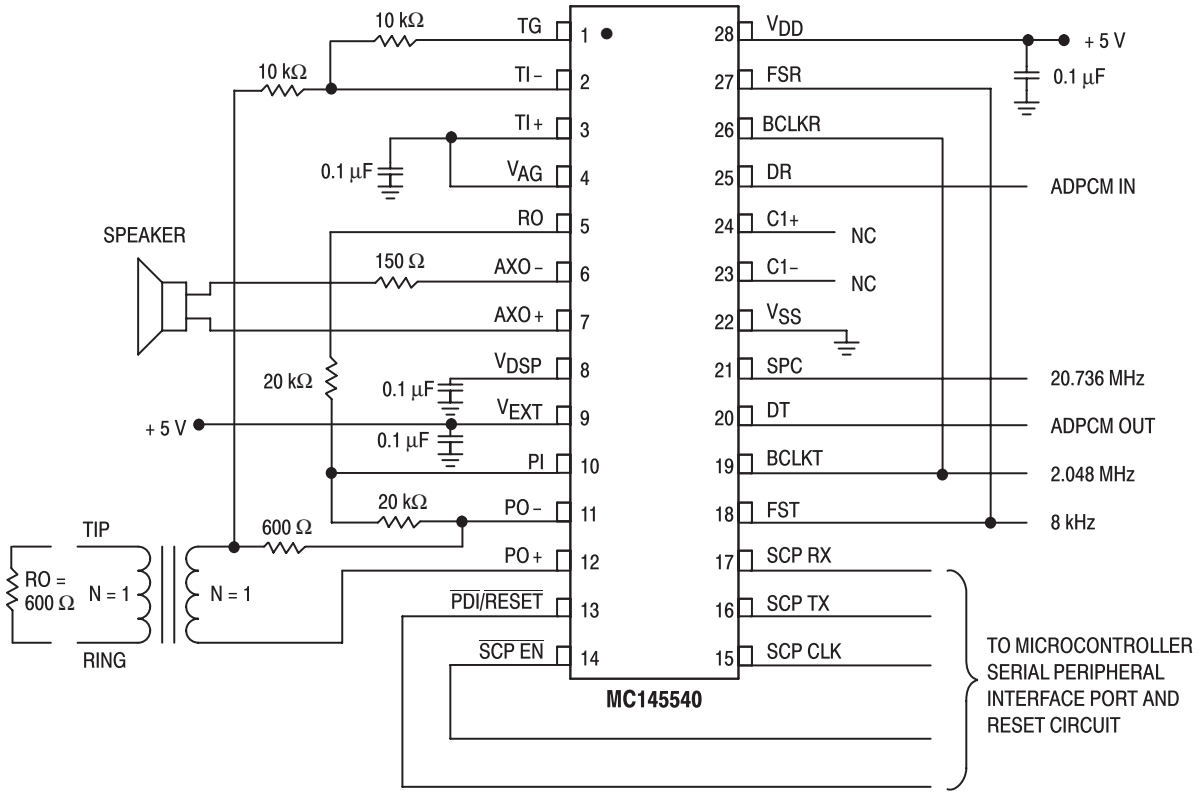

Figure 6-3. MC145540 Transformer + Speaker Application

7
PCB LAYOUT GUIDELINES

7.1 INTRODUCTION

The MC145540 is manufactured using high speed CMOS VLSI technology to implement the complex analog and digital signal processing functions of an ADPCM Codec. The fully differential analog circuit design techniques used for this device result in superior performance for the switched capacitor filters, the analog-to-digital converter (ADC) and the digital-to-analog converter (DAC). Special attention was given to the design of this device to reduce the sensitivities to noise, including power supply rejection and susceptibility to radio frequency noise. This special attention to design includes a fifth order low-pass filter, followed by a third order high-pass filter whose output is converted to a digital signal with greater than 75 dB of dynamic range, all operating on a single 5 V power supply. This results in a Mu-Law LSB size for small audio signals of about 386 mV. The typical idle channel noise level of this device is less than one LSB. In addition to the dynamic range of the codec/filter function of this device, the input gain-setting op amp has the capability of greater than 30 dB gain intended for an electret microphone interface.

7.2 PC BOARD MOUNTING

It is recommended that the device be soldered to the PC board for optimum noise performance. If the device is to be used in a socket, it should be placed in a low parasitic pin inductance (generally low profile) socket.

7.3 POWER SUPPLY, GROUND, AND NOISE CONSIDERATIONS

This device is intended to be used in switching applications that often require plugging the PC board into a rack with power applied. This is known as “hot-rack insertion.” In these applications care should be taken to limit the voltage on any pin from going positive of the V_{DD} pins or negative of the V_{SS} pins. One method is to extend the ground and power contacts of the PCB connector. The device has input protection on all pins and may source or sink a limited amount of current without damage. Current limiting may be accomplished by series resistors between the signal pins and the connector contacts.

The most important considerations for PCB layout deal with noise. This includes noise on the power supply, noise generated by the digital circuitry on the device, and cross coupling digital or radio frequency signals into the audio signals of this device. The best way to prevent noise is to:

1. Keep digital signals as far away from audio signals as possible.
2. Keep radio frequency signals as far away from the audio signals as possible.
3. Use short, low inductance traces for the audio circuitry to reduce inductive, capacitive, and radio frequency noise sensitivities.
4. Use short, low inductance traces for digital and RF circuitry to reduce inductive, capacitive, and radio frequency radiated noise.
5. Connect bypass capacitors from the V_{DD}, V_{DSP} and V_{AG} pins to V_{SS} with minimal trace length. Ceramic monolithic capacitors of about 0.1 μF are acceptable to decouple the device from its own noise. The V_{DD} capacitor should be about 1.0 μF when using the charge pump. This larger value of capacitance is needed to operate as a filter for the current pulses from the charge pump and as a current reservoir for powering the V_{DD} circuitry while the transfer capacitor, C1 is being

charged. C1 handles relatively large current pulses and should have short traces from the device. The V_{DSP} decoupling capacitor helps supply the instantaneous currents of the digital signal processor circuitry in addition to decoupling the noise that may be generated by other sections of the device or other circuitry on the power supply. The V_{AG} decoupling capacitor helps to reduce the impedance of the V_{AG} pin to V_{SS} at frequencies above the bandwidth of the V_{AG} generator, which reduces the susceptibility to RF noise.

6. Use a short, wide, low inductance trace to connect the V_{SS} ground pin to the power supply ground. The V_{SS} pin is the digital ground and the most negative power supply pin for the analog circuitry. All analog signal processing is referenced to the V_{AG} pin, but because digital and RF circuitry will probably be powered by this same ground, care must be taken to minimize high frequency noise in the V_{SS} trace. Depending on the application, a double sided PCB with a V_{SS} ground plane connecting all of the digital and analog V_{SS} pins together would be a good grounding method. A multilayer PC board with a ground plane connecting all of the digital and analog V_{SS} pins together would be the optimal ground configuration. These methods will result in the lowest resistance and the lowest inductance in the ground circuit. This is important to reduce voltage spikes in the ground circuit resulting from the high speed digital current spikes. The magnitude of digitally induced voltage spikes may be hundreds of times larger than the analog signal the device is required to digitize.
7. Use a short, wide, low inductance trace to connect the V_{EXT} power supply pin to the positive power supply. Depending on the application, a double sided PCB with bypass capacitors to the V_{SS} ground plane, as described above, may complete the low impedance coupling for the power supply. For a multilayer PC board with a power plane, connecting all of the positive power supply pins to the power plane would be the optimal power distribution method. The integrated circuit layout and packaging considerations for the positive power supply circuit are essentially the same as for the V_{SS} ground circuit.
8. The V_{AG} pin is the reference for all analog signal processing. In some applications the audio signal to be digitized may be referenced to the V_{SS} ground. To reduce the susceptibility to noise at the input of the ADC section, the three terminal op amp may be used in a differential to single ended circuit to provide level conversion from the V_{SS} ground to the V_{AG} ground with noise cancellation. The op amp may be used for more than 30 dB of gain in microphone interface circuits, which will require a compact layout with minimum trace lengths as well as isolation from noise sources. It is recommended that the layout be as symmetrical as possible to avoid any imbalances that would reduce the noise cancelling benefits of this differential op amp circuit. Refer to the application schematics for examples of this circuitry.
9. The MC145540 is fabricated with advanced high speed CMOS technology that is capable of responding to noise pulses on the clock pins of 1 ns or less. It should be noted that noise pulses of such short duration may not be seen with oscilloscopes that have less bandwidth than 600 MHz. The most often encountered sources of clock noise spikes are inductive or capacitive coupling of high-speed logic signals, and ground bounce. The best solution for addressing clock spikes due to coupling, is to separate the traces and use short low inductance PC board traces. To address ground bounce problems, all integrated circuits should have high frequency bypass capacitors directly across their power supply pins, with low inductance traces for ground and power supply. A less than optimum solution may be to limit the bandwidth of the trace by adding series resistance and/or capacitance at the input pin.

If possible, reference audio signals to the V_{AG} pin instead of to the V_{SS} pin. Handset receivers and telephone line interface circuits using transformers may be audio signal referenced completely to the V_{AG} pin. Refer to the application schematics for examples of this circuitry. The V_{AG} pin cannot be used for ESD and telephone line protection.

8
PROGRAMMING THE MC145540 TONE GENERATORS

8.1 INTRODUCTION

The Individual tones of the tone generator are calculated by the digital signal processor based on an Infinite Impulse Response (IIR) algorithm using 13-bit linear math. All of the internal memory locations for the tone generator coefficients and algorithms are used for the ADPCM decoder routine and their contents are lost during ADPCM decoder operation. ADPCM decoder operations are performed when the Tone Enable bit, BR7(b3) is a 0.

Frequency and attenuation coefficients must be programmed after BR7(b3) has been low. If BR7(b3) is kept high, either of the tones may be turned off and back on by BR7(b1:b0) without reprogramming the frequency and attenuation coefficients.

The attenuation coefficients may be reprogrammed while BR7(b3) is a logical one for each tone whether the tone is on or off.

The frequency of a tone should not be reprogrammed while it is on. To change the frequency of a tone, the tone generation algorithm needs to execute an initialization routine to develop the internal previous samples to load the IIR algorithm. This initialization routine for tone generator 1 is executed while BR7(b3) is a one and BR7(b1) transitions from a 0 to a 1. The logic state of BR7(b0) does not matter for tone generator 1. Similarly, this initialization routine for tone generator 2 is executed while BR7(b3) is a one and BR7(b0) transitions from a 0 to a 1. The logic state of BR7(b1) does not matter for tone generator 2. Both algorithms will be initialized if BR7(b3) is a logic one and BR7(1:0) are written to a logic 1 at the same time. If the frequency coefficient is changed and this initialization routine is not executed, the IIR algorithm could become unstable and generate a signal other than a clean sinusoid of the desired amplitude.

The following procedure outlines the programing sequence for the tone generator.

1. Program the Tone Enable bit, BR7(b3) to a one. This turns on the tone generator routine and turns off the ADPCM decoder routine. To avoid noise from the tone generator, BR7(1:0) should be written to zeroes. The logic states of BR7(b7, b6, b5, b4, and b2) do not matter while BR7(b3) is a 1.
2. Program the coefficients for frequency and attenuation. The tone generator may be programmed for frequency or attenuation for either tone in any order while BR7(1), (Tone 1 Enable) and BR7(0), (Tone 2 Enable) bits are zeroes. The 12-bit coefficients must be programmed first with the 8 least significant bits (LSB) in BR4 then the 4 most significant bits (MSB) are to be programmed into the 4 LSB of BR5. BR5 must also be programmed with the tone generator address parameter to tell the device the destination of the 12-bit coefficient. The tone generator address parameter is programmed into the 2 MSB of BR5 during the same write cycle as the 4 MSB of the 12-bit coefficient. Table 8-1 shows the tone generator address parameter destinations.

Table 8-1. Tone Generator Address Parameter Destinations

b7	b6	Destination
0	0	Tone 1, Frequency Coefficient
0	1	Tone 1, Attenuation Coefficient
1	0	Tone 2, Frequency Coefficient
1	1	Tone 2, Attenuation Coefficient

3. BR7(b7) should be monitored for a logic zero before writing another BR4 plus BR5 coefficient. The device can accept a coefficient from the combination of BR4 and BR5 once every FST cycle, which is 125 μs. The typical write period for a non-synchronized microprocessor should not be faster than every 250 μs.
4. BR7(1:0) may be programmed to logical ones to turn on tone 1 and tone 2. BR7(b3) must be programmed to a logical 1.

8.1.1 Programing the Tone Generator

This is an example of programing the tone generator to generate the DTMF pair of row 1 (697 Hz) at an amplitude of –14 dBm (600Ω) and column 2 (1336 Hz) at an amplitude of –12 dBm (600Ω).

```
Select the tone generator routine.

Program BR7 with: 0000 1000

Program the 12-bit frequency coefficient for 697 Hz for tone 1. This
section has examples of calculating this frequency coefficient of HEX 6
D5.

Program BR4 with: 1101 0101

Program BR5 with: 0000 0110

Read BR7(7) and check for a zero to confirm that the DSP machine has
latched the data from BR4 and BR5.

Program the 12-bit attenuation coefficient for – 14 dBm (600Ω) for tone
1. This section has an example of calculating this attenuation
coefficient of HEX 1 1A.

Program BR4 with: 0001 1010

Program BR5 with: 0100 0001

Read BR7(7) and check for a zero to confirm that the DSP machine has
latched the data from BR4 and BR5.

Program the 12-bit frequency coefficient for 1336 Hz for tone 2. Table
8–2 is a complete table of frequency coefficients which gives a
coefficient for a 1336.20 Hz frequency of HEX 3 FC.

Program BR4 with: 1111 1100

Program BR5 with: 1000 0011

Read BR7(7) and check for a zero to confirm that the DSP machine has
latched the data from BR4 and BR5.

Program the 12-bit attenuation coefficient for – 12 dBm (600Ω) for tone
2. Table 8-3 is a complete table of attenuation coefficients which
gives a coefficient for an amplitude – 12.01 dBm (600Ω) of HEX 1 63.

Program BR4 with: 0110 0011

Program BR5 with: 1100 0001
```

```
Read BR7(7) and check for a zero to confirm that the DSP machine has
latched the data from BR4 and BR5.

Turn on tone 1 and tone 2 with BR7(b3, b1, and b0) to logical 1s.
Recall that B7(b3) must be a logical 1 also during all tone generator
functions including programing.

Program BR7 with: 0000 1011
```

8.1.2 Tone Frequency Coefficient Calculation.

The tone generator frequency is based on a filter which is programmed by the equation cos(2*pi*f*0.000125). The form of this data is a 12-bit (two's complement) coefficient. An example of calculating the binary or hexadecimal coefficient for 697 hertz is this:

```
cos(2*pi*f*0.000125)
cos(2*pi*(697)*0.000125)
cos(2*(3.14159)*(697)*0.000125)
cos(0.547422 radians)  =  0.853869
```

To convert this number into a 12-bit two's complement binary number whose most significant bit is the sign information (1 is negative) and remaining 11-bits are the fractional part, (0.853869) must be converted to a fractional binary number with 11 bits of significance. The successive approximation register (SAR) method of converting from decimal to binary is used as an example.

```
(0.853869) is positive,
Therefore: coefficient = binary 0.XXX XXXX XXXX

0.853869 – (2 exp-1) = 0.853869 – 0.5 = 0.353869
Therefore: coefficient = binary 0.1XX XXXX XXXX

0.353869 – (2 exp-2) = 0.353869 – 0.25 = 0.103869
Therefore: coefficient = binary 0.11X XXXX XXXX

0.103869 – (2 exp-3) = 0.103869 – 0.125 = – 0.021131
This changed the sign of the result and

Therefore: coefficient = binary 0.110 XXXX XXXX

0.103869 – (2 exp-4) = 0.103869 – 0.0625 = 0.041369
Therefore: coefficient = binary 0.110 1XXX XXXX

0.041369 – (2 exp-5) = 0.041369 – 0.03125 = 0.010119
Therefore: coefficient = binary 0.110 11XX XXXX

0.010119 – (2 exp-6) = 0.010119 – 0.015625 = – 0.005506
This changed the sign of the result and
therefore: coefficient = binary 0.110 110X XXXX

0.010119 – (2 exp-7) = 0.010119 – 0.0078125 = 0.0023065
Therefore: coefficient = binary 0.110 1101 XXXX

0.0023065 – (2 exp-8) = 0.0023065 – 0.00390625 = – 0.00159975
This changed the sign of the result and
Therefore: coefficient = binary 0.110 1101 0XXX

0.0023065 – (2 exp-9) = 0.0023065 – 0.001953125 = 0.000353375
Therefore: coefficient = binary 0.110 1101 01XX

0.000353375 – (2 exp-10) = 0.000353375 – 0.0009765625 = – 0.0006231875
This changed the sign of the result and
Therefore: coefficient = binary 0.110 1101 010X
```

```
0.000353375 – (2 exp-11) = 0.000353375 – 0.00048828125 = – .00013490625
This changed the sign of the result and
Therefore: coefficient = binary 0.110 1101 0100
```

This is the last bit and to make sure that we have the correct value for the LSB, one bit beyond the LSB must be determined for round-off error minimization. Therefore:

```
0.000353375 – (2 exp-12) = 0.000353375 – 0.000244140625 = 0.000109234375
This result has a positive sign meaning that the remainder is greater than
one half of the LSB and to minimize error, the LSB should be a one. This
changes the result and therefore: coefficient = binary 0.110 1101 0101

Which binary 0.110 1101 0101  is Hexadecimal 06 D5
```

8.1.3 Tone Frequency Coefficient Calculation using Integer Mathematics for Decimal to Hexadecimal Conversion.

The math to convert from decimal to binary for the frequency coefficient calculations may be kept in integer form given that this device uses a coefficient that has 11-bits of fractional component. This is accomplished by multiplying the result of the cosine function (which is in decimal form) by 2^{11}, or 2048. The round-off error minimization is accomplished by rounding-off the fractional component after multiplying by 2048. This example helps to clarify this procedure by calculating the binary or hexadecimal coefficient for 697 hertz.

```
cos(2*pi*f*0.000125)
cos(2*pi*(697)*0.000125)
cos(2*(3.14159)*(697)*0.000125)
cos(0.547422 radians)  =  0.853869

Multiply by 2048

0.853869 * 2048 = 1748.723712

Round-off error minimization (the digit to the right of the decimal
point is greater than or equal to 5). Therefore:

 1749  -  1024  =  725   >    binary 0.1XX XXXX XXXX
  725  –   512  =  213   >    binary 0.11X XXXX XXXX
  213  –   256  =  –43   >    binary 0.110 XXXX XXXX
  213  –   128  =   85   >    binary 0.110 1XXX XXXX
   85  –    64  =   21   >    binary 0.110 11XX XXXX
   21  –    32  =  –11   >    binary 0.110 110X XXXX
   21  –    16  =    5   >    binary 0.110 1101 XXXX
    5  –     8  =   –3   >    binary 0.110 1101 0XXX
    5  –     4  =    1   >    binary 0.110 1101 01XX
    1  –     2  =   –1   >    binary 0.110 1101 010X
    1  –     1  =    0   >    binary 0.110 1101 0101

Therefore: coefficient = binary 0.110 1101 0101

Which binary 0.110 1101 0101  is hexadecimal 06 D5
```

8.1.4 Tone Attenuation Coefficient Calculation

This is an example of calculating the attenuation coefficient for an output amplitude of –14 dBm (600Ω) for one of the tone generators. The tone attenuation is accomplished by an 11-bit linear multiply of the output from each of the IIR frequency algorithms. The format of the attenuation coefficient is a 12-bit 2's complement number with bits (10:0) being the fractional part and bit (11) being the sign information. These attenuation coefficients should be limited to values between zero (binary 0.000 0000 0000 or hexadecimal 0 00) and almost positive 1 (binary 0.111 1111 1111 or hexadecimal 7 FF). Note that this scaling always results in attenuation of the tones.

The amplitude from the frequency IIR algorithm is:

```
0.775 Vrms*(3.17 dB)*8192/8159 = 1.1209 Vrms
3.17 dB = 10exp(3.17/20) V/V = 1.44046 V/V
```

Where: 1. 0.775 Vrms is 0 dBm0 for this device.

2. 3.17 dB is the amplitude headroom for a tone relative to the Mu-Law reference level of 0 dBm0.

3. 8192/8159 is the increase in amplitude for 13-bit linear compared to Mu-Law companding.

The maximum amplitude from either tone 1 or tone 2 is:

```
1.1209 Vrms*2047/2048=1.1204 Vrms
```

Where: 4. 2047/2048 is the maximum output ratio for the attenuation routine.

To calculate –14 dBm (600Ω), start with the equation for dBm in volts, and solve for output voltage.

$dBm=10*Log[(Vrms^2/R)/1mW]$

$dBm/10=Log[(Vrms^2/R)/1mW]$

$10exp(dBm/10)=(Vrms^2/R)/1mW=(Vrms^2)/(R*1mW)$

$[10exp(dBm/10)]*(R*1mW)=Vrms^2$

$sqrt{[10exp(dBm/10)]*(R*1mW)}=Vrms$

$Vrms=sqrt{[10exp(dBm/10)]*(600\Omega*1mW)}$

Using this equation to calculate the voltage for a –14 dBm amplitude.

$Vrms(-14dBm)=sqrt{[10exp(-14/10)]*(600*0.001)}$

$Vrms(-14dBm)=0.1546\ Vrms$

The ratio of this desired voltage divided by the maximum tone amplitude gives the tone coefficient, when this ratio is converted to hexadecimal. The tone coefficient requires an 11-bit fraction, which may be converted to hexadecimal using the same procedures as the frequency coefficient.

```
0.1546 Vrms/1.1209 Vrms = 0.137924882
```

Converting to Hexadecimal for 11-bit fraction.

```
0.137924882*2048=282

Decimal 282 = Hexadecimal 1 1A
```

Tables 8-2 and 8-3 show the frequency coefficients and attenuation coefficients for the tone generator.

Table 8-2. Frequency Coefficients for Tone Generator

BCD	HEX BR5	HEX BR4	FREQUENCY
–2047	8	01	3,960.21
–2046	8	02	3,943.73
–2045	8	03	3,931.08
–2044	8	04	3,920.41
–2043	8	05	3,911.01
–2042	8	06	3,902.51
–2041	8	07	3,894.70
–2040	8	08	3,887.42
–2039	8	09	3,880.59
–2038	8	0A	3,874.13
–2037	8	0B	3,867.98
–2036	8	0C	3,862.10
–2035	8	0D	3,856.46
–2034	8	0E	3,851.04
–2033	8	0F	3,845.80
–2032	8	10	3,840.74
–2031	8	11	3,835.83
–2030	8	12	3,831.07
–2029	8	13	3,826.43
–2028	8	14	3,821.91
–2027	8	15	3,817.51
–2026	8	16	3,813.21
–2025	8	17	3,809.00
–2024	8	18	3,804.88
–2023	8	19	3,800.85
–2022	8	1A	3,796.90
–2021	8	1B	3,793.02
–2020	8	1C	3,789.22
–2019	8	1D	3,785.48
–2018	8	1E	3,781.80
–2017	8	1F	3,778.19
–2016	8	20	3,774.63
–2015	8	21	3,771.12
–2014	8	22	3,767.67
–2013	8	23	3,764.27
–2012	8	24	3,760.92
–2011	8	25	3,757.61
–2010	8	26	3,754.34
–2009	8	27	3,751.12
–2008	8	28	3,747.94
–2007	8	29	3,744.80
–2006	8	2A	3,741.70
–2005	8	2B	3,738.63
–2004	8	2C	3,735.60
–2003	8	2D	3,732.60
–2002	8	2E	3,729.63
–2001	8	2F	3,726.70
–2000	8	30	3,723.79
–1999	8	31	3,720.92
–1998	8	32	3,718.08
–1997	8	33	3,715.26
–1996	8	34	3,712.47
–1995	8	35	3,709.71
–1994	8	36	3,706.97
–1993	8	37	3,704.25
–1992	8	38	3,701.57
–1991	8	39	3,698.90
–1990	8	3A	3,696.26
–1989	8	3B	3,693.64
–1988	8	3C	3,691.04
–1987	8	3D	3,688.46
–1986	8	3E	3,685.91
–1985	8	3F	3,683.37
–1984	8	40	3,680.86
–1983	8	41	3,678.36
–1982	8	42	3,675.88
–1981	8	43	3,673.42
–1980	8	44	3,670.98
–1979	8	45	3,668.55
–1978	8	46	3,666.15
–1977	8	47	3,663.76
–1976	8	48	3,661.38
–1975	8	49	3,659.03
–1974	8	4A	3,656.69
–1973	8	4B	3,654.36
–1972	8	4C	3,652.05
–1971	8	4D	3,649.75
–1970	8	4E	3,647.47
–1969	8	4F	3,645.20
–1968	8	50	3,642.95
–1967	8	51	3,640.71
–1966	8	52	3,638.48
–1965	8	53	3,636.27
–1964	8	54	3,634.07
–1963	8	55	3,631.89
–1962	8	56	3,629.71
–1961	8	57	3,627.55
–1960	8	58	3,625.40
–1959	8	59	3,623.26
–1958	8	5A	3,621.13
–1957	8	5B	3,619.02
–1956	8	5C	3,616.92
–1955	8	5D	3,614.82
–1954	8	5E	3,612.74
–1953	8	5F	3,610.67
–1952	8	60	3,608.61
–1951	8	61	3,606.56
–1950	8	62	3,604.52
–1949	8	63	3,602.49
–1948	8	64	3,600.48
–1947	8	65	3,598.47
–1946	8	66	3,596.47
–1945	8	67	3,594.48
–1944	8	68	3,592.50
–1943	8	69	3,590.52
–1942	8	6A	3,588.56
–1941	8	6B	3,586.61
–1940	8	6C	3,584.66
–1939	8	6D	3,582.73
–1938	8	6E	3,580.80
–1937	8	6F	3,578.88
–1936	8	70	3,576.97
–1935	8	71	3,575.07
–1934	8	72	3,573.18
–1933	8	73	3,571.29
–1932	8	74	3,569.41
–1931	8	75	3,567.54
–1930	8	76	3,565.68
–1929	8	77	3,563.83
–1928	8	78	3,561.98
–1927	8	79	3,560.14
–1926	8	7A	3,558.31
–1925	8	7B	3,556.48
–1924	8	7C	3,554.66
–1923	8	7D	3,552.85
–1922	8	7E	3,551.05
–1921	8	7F	3,549.25
–1920	8	80	3,547.46
–1919	8	81	3,545.68
–1918	8	82	3,543.90
–1917	8	83	3,542.13
–1916	8	84	3,540.37
–1915	8	85	3,538.61
–1914	8	86	3,536.86
–1913	8	87	3,535.12
–1912	8	88	3,533.38
–1911	8	89	3,531.65
–1910	8	8A	3,529.92
–1909	8	8B	3,528.20
–1908	8	8C	3,526.49
–1907	8	8D	3,524.78
–1906	8	8E	3,523.08
–1905	8	8F	3,521.38
–1904	8	90	3,519.69
–1903	8	91	3,518.01
–1902	8	92	3,516.33
–1901	8	93	3,514.65
–1900	8	94	3,512.99
–1899	8	95	3,511.32
–1898	8	96	3,509.67

Table 8-2. Frequency Coefficients for Tone Generator (continued)

BCD	HEX BR5	HEX BR4	FREQUENCY
–1897	8	97	3,508.01
–1896	8	98	3,506.37
–1895	8	99	3,504.72
–1894	8	9A	3,503.09
–1893	8	9B	3,501.46
–1892	8	9C	3,499.83
–1891	8	9D	3,498.21
–1890	8	9E	3,496.59
–1889	8	9F	3,494.98
–1888	8	A0	3,493.37
–1887	8	A1	3,491.77
–1886	8	A2	3,490.17
–1885	8	A3	3,488.58
–1884	8	A4	3,486.99
–1883	8	A5	3,485.41
–1882	8	A6	3,483.83
–1881	8	A7	3,482.26
–1880	8	A8	3,480.69
–1879	8	A9	3,479.12
–1878	8	AA	3,477.56
–1877	8	AB	3,476.00
–1876	8	AC	3,474.45
–1875	8	AD	3,472.91
–1874	8	AE	3,471.36
–1873	8	AF	3,469.82
–1872	8	B0	3,468.29
–1871	8	B1	3,466.76
–1870	8	B2	3,465.23
–1869	8	B3	3,463.71
–1868	8	B4	3,462.19
–1867	8	B5	3,460.67
–1866	8	B6	3,459.16
–1865	8	B7	3,457.66
–1864	8	B8	3,456.15
–1863	8	B9	3,454.66
–1862	8	BA	3,453.16
–1861	8	BB	3,451.67
–1860	8	BC	3,450.18
–1859	8	BD	3,448.70
–1858	8	BE	3,447.22
–1857	8	BF	3,445.74
–1856	8	C0	3,444.27
–1855	8	C1	3,442.80
–1854	8	C2	3,441.34
–1853	8	C3	3,439.87
–1852	8	C4	3,438.42
–1851	8	C5	3,436.96
–1850	8	C6	3,435.51
–1849	8	C7	3,434.06
–1848	8	C8	3,432.62
–1847	8	C9	3,431.18
–1846	8	CA	3,429.74
–1845	8	CB	3,428.31
–1844	8	CC	3,426.88
–1843	8	CD	3,425.45
–1842	8	CE	3,424.03
–1841	8	CF	3,422.60
–1840	8	D0	3,421.19
–1839	8	D1	3,419.77
–1838	8	D2	3,418.36
–1837	8	D3	3,416.95
–1836	8	D4	3,415.55
–1835	8	D5	3,414.15
–1834	8	D6	3,412.75
–1833	8	D7	3,411.35
–1832	8	D8	3,409.96
–1831	8	D9	3,408.57
–1830	8	DA	3,407.19
–1829	8	DB	3,405.80
–1828	8	DC	3,404.42
–1827	8	DD	3,403.05
–1826	8	DE	3,401.67
–1825	8	DF	3,400.30
–1824	8	E0	3,398.93
–1823	8	E1	3,397.57
–1822	8	E2	3,396.20
–1821	8	E3	3,394.84
–1820	8	E4	3,393.49
–1819	8	E5	3,392.13
–1818	8	E6	3,390.78
–1817	8	E7	3,389.43
–1816	8	E8	3,388.08
–1815	8	E9	3,386.74
–1814	8	EA	3,385.40
–1813	8	EB	3,384.06
–1812	8	EC	3,382.73
–1811	8	ED	3,381.39
–1810	8	EE	3,380.06
–1809	8	EF	3,378.74
–1808	8	F0	3,377.41
–1807	8	F1	3,376.09
–1806	8	F2	3,374.77
–1805	8	F3	3,373.45
–1804	8	F4	3,372.14
–1803	8	F5	3,370.83
–1802	8	F6	3,369.52
–1801	8	F7	3,368.21
–1800	8	F8	3,366.90
–1799	8	F9	3,365.60
–1798	8	FA	3,364.30
–1797	8	FB	3,363.01
–1796	8	FC	3,361.71
–1795	8	FD	3,360.42
–1794	8	FE	3,359.13
–1793	8	FF	3,357.84
–1792	9	00	3,356.56
–1791	9	01	3,355.27
–1790	9	02	3,353.99
–1789	9	03	3,352.71
–1788	9	04	3,351.44
–1787	9	05	3,350.16
–1786	9	06	3,348.89
–1785	9	07	3,347.62
–1784	9	08	3,346.36
–1783	9	09	3,345.09
–1782	9	0A	3,343.83
–1781	9	0B	3,342.57
–1780	9	0C	3,341.31
–1779	9	0D	3,340.05
–1778	9	0E	3,338.80
–1777	9	0F	3,337.55
–1776	9	10	3,336.30
–1775	9	11	3,335.05
–1774	9	12	3,333.81
–1773	9	13	3,332.56
–1772	9	14	3,331.32
–1771	9	15	3,330.08
–1770	9	16	3,328.85
–1769	9	17	3,327.61
–1768	9	18	3,326.38
–1767	9	19	3,325.15
–1766	9	1A	3,323.92
–1765	9	1B	3,322.69
–1764	9	1C	3,321.47
–1763	9	1D	3,320.24
–1762	9	1E	3,319.02
–1761	9	1F	3,317.81
–1760	9	20	3,316.59
–1759	9	21	3,315.37
–1758	9	22	3,314.16
–1757	9	23	3,312.95
–1756	9	24	3,311.74
–1755	9	25	3,310.53
–1754	9	26	3,309.33
–1753	9	27	3,308.12
–1752	9	28	3,306.92
–1751	9	29	3,305.72
–1750	9	2A	3,304.53
–1749	9	2B	3,303.33
–1748	9	2C	3,302.14

Table 8-2. Frequency Coefficients for Tone Generator (continued)

BCD	HEX BR5	HEX BR4	FREQUENCY
–1747	9	2D	3,300.94
–1746	9	2E	3,299.75
–1745	9	2F	3,298.57
–1744	9	30	3,297.38
–1743	9	31	3,296.19
–1742	9	32	3,295.01
–1741	9	33	3,293.83
–1740	9	34	3,292.65
–1739	9	35	3,291.47
–1738	9	36	3,290.30
–1737	9	37	3,289.12
–1736	9	38	3,287.95
–1735	9	39	3,286.78
–1734	9	3A	3,285.61
–1733	9	3B	3,284.44
–1732	9	3C	3,283.27
–1731	9	3D	3,282.11
–1730	9	3E	3,280.95
–1729	9	3F	3,279.79
–1728	9	40	3,278.63
–1727	9	41	3,277.47
–1726	9	42	3,276.31
–1725	9	43	3,275.16
–1724	9	44	3,274.01
–1723	9	45	3,272.86
–1722	9	46	3,271.71
–1721	9	47	3,270.56
–1720	9	48	3,269.41
–1719	9	49	3,268.27
–1718	9	4A	3,267.13
–1717	9	4B	3,265.99
–1716	9	4C	3,264.85
–1715	9	4D	3,263.71
–1714	9	4E	3,262.57
–1713	9	4F	3,261.44
–1712	9	50	3,260.30
–1711	9	51	3,259.17
–1710	9	52	3,258.04
–1709	9	53	3,256.91
–1708	9	54	3,255.78
–1707	9	55	3,254.66
–1706	9	56	3,253.53
–1705	9	57	3,252.41
–1704	9	58	3,251.29
–1703	9	59	3,250.17
–1702	9	5A	3,249.05
–1701	9	5B	3,247.93
–1700	9	5C	3,246.82
–1699	9	5D	3,245.70
–1698	9	5E	3,244.59
–1697	9	5F	3,243.48
–1696	9	60	3,242.37
–1695	9	61	3,241.26
–1694	9	62	3,240.15
–1693	9	63	3,239.05
–1692	9	64	3,237.94
–1691	9	65	3,236.84
–1690	9	66	3,235.74
–1689	9	67	3,234.64
–1688	9	68	3,233.54
–1687	9	69	3,232.44
–1686	9	6A	3,231.35
–1685	9	6B	3,230.25
–1684	9	6C	3,229.16
–1683	9	6D	3,228.07
–1682	9	6E	3,226.98
–1681	9	6F	3,225.89
–1680	9	70	3,224.80
–1679	9	71	3,223.72
–1678	9	72	3,222.63
–1677	9	73	3,221.55
–1676	9	74	3,220.46
–1675	9	75	3,219.38
–1674	9	76	3,218.30
–1673	9	77	3,217.22
–1672	9	78	3,216.15
–1671	9	79	3,215.07
–1670	9	7A	3,214.00
–1669	9	7B	3,212.92
–1668	9	7C	3,211.85
–1667	9	7D	3,210.78
–1666	9	7E	3,209.71
–1665	9	7F	3,208.64
–1664	9	80	3,207.58
–1663	9	81	3,206.51
–1662	9	82	3,205.45
–1661	9	83	3,204.38
–1660	9	84	3,203.32
–1659	9	85	3,202.26
–1658	9	86	3,201.20
–1657	9	87	3,200.14
–1656	9	88	3,199.08
–1655	9	89	3,198.03
–1654	9	8A	3,196.97
–1653	9	8B	3,195.92
–1652	9	8C	3,194.87
–1651	9	8D	3,193.82
–1650	9	8E	3,192.77
–1649	9	8F	3,191.72
–1648	9	90	3,190.67
–1647	9	91	3,189.62
–1646	9	92	3,188.58
–1645	9	93	3,187.53
–1644	9	94	3,186.49
–1643	9	95	3,185.45
–1642	9	96	3,184.41
–1641	9	97	3,183.37
–1640	9	98	3,182.33
–1639	9	99	3,181.29
–1638	9	9A	3,180.25
–1637	9	9B	3,179.22
–1636	9	9C	3,178.19
–1635	9	9D	3,177.15
–1634	9	9E	3,176.12
–1633	9	9F	3,175.09
–1632	9	A0	3,174.06
–1631	9	A1	3,173.03
–1630	9	A2	3,172.00
–1629	9	A3	3,170.98
–1628	9	A4	3,169.95
–1627	9	A5	3,168.93
–1626	9	A6	3,167.91
–1625	9	A7	3,166.88
–1624	9	A8	3,165.86
–1623	9	A9	3,164.84
–1622	9	AA	3,163.82
–1621	9	AB	3,162.81
–1620	9	AC	3,161.79
–1619	9	AD	3,160.77
–1618	9	AE	3,159.76
–1617	9	AF	3,158.75
–1616	9	B0	3,157.73
–1615	9	B1	3,156.72
–1614	9	B2	3,155.71
–1613	9	B3	3,154.70
–1612	9	B4	3,153.69
–1611	9	B5	3,152.69
–1610	9	B6	3,151.68
–1609	9	B7	3,150.67
–1608	9	B8	3,149.67
–1607	9	B9	3,148.67
–1606	9	BA	3,147.66
–1605	9	BB	3,146.66
–1604	9	BC	3,145.66
–1603	9	BD	3,144.66
–1602	9	BE	3,143.66
–1601	9	BF	3,142.67
–1600	9	C0	3,141.67
–1599	9	C1	3,140.67
–1598	9	C2	3,139.68

Table 8-2. Frequency Coefficients for Tone Generator (continued)

BCD	HEX BR5	HEX BR4	FREQUENCY
–1597	9	C3	3,138.69
–1596	9	C4	3,137.69
–1595	9	C5	3,136.70
–1594	9	C6	3,135.71
–1593	9	C7	3,134.72
–1592	9	C8	3,133.73
–1591	9	C9	3,132.75
–1590	9	CA	3,131.76
–1589	9	CB	3,130.77
–1588	9	CC	3,129.79
–1587	9	CD	3,128.80
–1586	9	CE	3,127.82
–1585	9	CF	3,126.84
–1584	9	D0	3,125.86
–1583	9	D1	3,124.88
–1582	9	D2	3,123.90
–1581	9	D3	3,122.92
–1580	9	D4	3,121.94
–1579	9	D5	3,120.96
–1578	9	D6	3,119.99
–1577	9	D7	3,119.01
–1576	9	D8	3,118.04
–1575	9	D9	3,117.07
–1574	9	DA	3,116.10
–1573	9	DB	3,115.12
–1572	9	DC	3,114.15
–1571	9	DD	3,113.18
–1570	9	DE	3,112.22
–1569	9	DF	3,111.25
–1568	9	E0	3,110.28
–1567	9	E1	3,109.31
–1566	9	E2	3,108.35
–1565	9	E3	3,107.39
–1564	9	E4	3,106.42
–1563	9	E5	3,105.46
–1562	9	E6	3,104.50
–1561	9	E7	3,103.54
–1560	9	E8	3,102.58
–1559	9	E9	3,101.62
–1558	9	EA	3,100.66
–1557	9	EB	3,099.70
–1556	9	EC	3,098.75
–1555	9	ED	3,097.79
–1554	9	EE	3,096.83
–1553	9	EF	3,095.88
–1552	9	F0	3,094.93
–1551	9	F1	3,093.97
–1550	9	F2	3,093.02
–1549	9	F3	3,092.07
–1548	9	F4	3,091.12
–1547	9	F5	3,090.17
–1546	9	F6	3,089.23
–1545	9	F7	3,088.28
–1544	9	F8	3,087.33
–1543	9	F9	3,086.39
–1542	9	FA	3,085.44
–1541	9	FB	3,084.50
–1540	9	FC	3,083.55
–1539	9	FD	3,082.61
–1538	9	FE	3,081.67
–1537	9	FF	3,080.73
–1536	A	00	3,079.79
–1535	A	01	3,078.85
–1534	A	02	3,077.91
–1533	A	03	3,076.97
–1532	A	04	3,076.03
–1531	A	05	3,075.10
–1530	A	06	3,074.16
–1529	A	07	3,073.23
–1528	A	08	3,072.29
–1527	A	09	3,071.36
–1526	A	0A	3,070.43
–1525	A	0B	3,069.49
–1524	A	0C	3,068.56
–1523	A	0D	3,067.63
–1522	A	0E	3,066.70
–1521	A	0F	3,065.77
–1520	A	10	3,064.85
–1519	A	11	3,063.92
–1518	A	12	3,062.99
–1517	A	13	3,062.07
–1516	A	14	3,061.14
–1515	A	15	3,060.22
–1514	A	16	3,059.29
–1513	A	17	3,058.37
–1512	A	18	3,057.45
–1511	A	19	3,056.53
–1510	A	1A	3,055.61
–1509	A	1B	3,054.69
–1508	A	1C	3,053.77
–1507	A	1D	3,052.85
–1506	A	1E	3,051.93
–1505	A	1F	3,051.01
–1504	A	20	3,050.10
–1503	A	21	3,049.18
–1502	A	22	3,048.27
–1501	A	23	3,047.35
–1500	A	24	3,046.44
–1499	A	25	3,045.53
–1498	A	26	3,044.62
–1497	A	27	3,043.70
–1496	A	28	3,042.79
–1495	A	29	3,041.88
–1494	A	2A	3,040.97
–1493	A	2B	3,040.07
–1492	A	2C	3,039.16
–1491	A	2D	3,038.25
–1490	A	2E	3,037.34
–1489	A	2F	3,036.44
–1488	A	30	3,035.53
–1487	A	31	3,034.63
–1486	A	32	3,033.72
–1485	A	33	3,032.82
–1484	A	34	3,031.92
–1483	A	35	3,031.02
–1482	A	36	3,030.12
–1481	A	37	3,029.22
–1480	A	38	3,028.32
–1479	A	39	3,027.42
–1478	A	3A	3,026.52
–1477	A	3B	3,025.62
–1476	A	3C	3,024.72
–1475	A	3D	3,023.83
–1474	A	3E	3,022.93
–1473	A	3F	3,022.04
–1472	A	40	3,021.14
–1471	A	41	3,020.25
–1470	A	42	3,019.35
–1469	A	43	3,018.46
–1468	A	44	3,017.57
–1467	A	45	3,016.68
–1466	A	46	3,015.79
–1465	A	47	3,014.90
–1464	A	48	3,014.01
–1463	A	49	3,013.12
–1462	A	4A	3,012.23
–1461	A	4B	3,011.34
–1460	A	4C	3,010.46
–1459	A	4D	3,009.57
–1458	A	4E	3,008.69
–1457	A	4F	3,007.80
–1456	A	50	3,006.92
–1455	A	51	3,006.03
–1454	A	52	3,005.15
–1453	A	53	3,004.27
–1452	A	54	3,003.39
–1451	A	55	3,002.50
–1450	A	56	3,001.62
–1449	A	57	3,000.74
–1448	A	58	2,999.86

Table 8-2. Frequency Coefficients for Tone Generator (continued)

BCD	HEX BR5	HEX BR4	FREQUENCY
–1447	A	59	2,998.99
–1446	A	5A	2,998.11
–1445	A	5B	2,997.23
–1444	A	5C	2,996.35
–1443	A	5D	2,995.48
–1442	A	5E	2,994.60
–1441	A	5F	2,993.72
–1440	A	60	2,992.85
–1439	A	61	2,991.98
–1438	A	62	2,991.10
–1437	A	63	2,990.23
–1436	A	64	2,989.36
–1435	A	65	2,988.49
–1434	A	66	2,987.62
–1433	A	67	2,986.74
–1432	A	68	2,985.87
–1431	A	69	2,985.01
–1430	A	6A	2,984.14
–1429	A	6B	2,983.27
–1428	A	6C	2,982.40
–1427	A	6D	2,981.53
–1426	A	6E	2,980.67
–1425	A	6F	2,979.80
–1424	A	70	2,978.94
–1423	A	71	2,978.07
–1422	A	72	2,977.21
–1421	A	73	2,976.34
–1420	A	74	2,975.48
–1419	A	75	2,974.62
–1418	A	76	2,973.76
–1417	A	77	2,972.89
–1416	A	78	2,972.03
–1415	A	79	2,971.17
–1414	A	7A	2,970.31
–1413	A	7B	2,969.45
–1412	A	7C	2,968.60
–1411	A	7D	2,967.74
–1410	A	7E	2,966.88
–1409	A	7F	2,966.02
–1408	A	80	2,965.17
–1407	A	81	2,964.31
–1406	A	82	2,963.46
–1405	A	83	2,962.60
–1404	A	84	2,961.75
–1403	A	85	2,960.89
–1402	A	86	2,960.04
–1401	A	87	2,959.19
–1400	A	88	2,958.34
–1399	A	89	2,957.48
–1398	A	8A	2,956.63
–1397	A	8B	2,955.78
–1396	A	8C	2,954.93
–1395	A	8D	2,954.08
–1394	A	8E	2,953.23
–1393	A	8F	2,952.39
–1392	A	90	2,951.54
–1391	A	91	2,950.69
–1390	A	92	2,949.84
–1389	A	93	2,949.00
–1388	A	94	2,948.15
–1387	A	95	2,947.31
–1386	A	96	2,946.46
–1385	A	97	2,945.62
–1384	A	98	2,944.77
–1383	A	99	2,943.93
–1382	A	9A	2,943.09
–1381	A	9B	2,942.25
–1380	A	9C	2,941.40
–1379	A	9D	2,940.56
–1378	A	9E	2,939.72
–1377	A	9F	2,938.88
–1376	A	A0	2,938.04
–1375	A	A1	2,937.20
–1374	A	A2	2,936.37
–1373	A	A3	2,935.53
–1372	A	A4	2,934.69
–1371	A	A5	2,933.85
–1370	A	A6	2,933.02
–1369	A	A7	2,932.18
–1368	A	A8	2,931.34
–1367	A	A9	2,930.51
–1366	A	AA	2,929.67
–1365	A	AB	2,928.84
–1364	A	AC	2,928.01
–1363	A	AD	2,927.17
–1362	A	AE	2,926.34
–1361	A	AF	2,925.51
–1360	A	B0	2,924.68
–1359	A	B1	2,923.85
–1358	A	B2	2,923.01
–1357	A	B3	2,922.18
–1356	A	B4	2,921.35
–1355	A	B5	2,920.52
–1354	A	B6	2,919.70
–1353	A	B7	2,918.87
–1352	A	B8	2,918.04
–1351	A	B9	2,917.21
–1350	A	BA	2,916.39
–1349	A	BB	2,915.56
–1348	A	BC	2,914.73
–1347	A	BD	2,913.91
–1346	A	BE	2,913.08
–1345	A	BF	2,912.26
–1344	A	C0	2,911.43
–1343	A	C1	2,910.61
–1342	A	C2	2,909.79
–1341	A	C3	2,908.96
–1340	A	C4	2,908.14
–1339	A	C5	2,907.32
–1338	A	C6	2,906.50
–1337	A	C7	2,905.68
–1336	A	C8	2,904.86
–1335	A	C9	2,904.04
–1334	A	CA	2,903.22
–1333	A	CB	2,902.40
–1332	A	CC	2,901.58
–1331	A	CD	2,900.76
–1330	A	CE	2,899.94
–1329	A	CF	2,899.13
–1328	A	D0	2,898.31
–1327	A	D1	2,897.49
–1326	A	D2	2,896.68
–1325	A	D3	2,895.86
–1324	A	D4	2,895.05
–1323	A	D5	2,894.23
–1322	A	D6	2,893.42
–1321	A	D7	2,892.60
–1320	A	D8	2,891.79
–1319	A	D9	2,890.98
–1318	A	DA	2,890.16
–1317	A	DB	2,889.35
–1316	A	DC	2,888.54
–1315	A	DD	2,887.73
–1314	A	DE	2,886.92
–1313	A	DF	2,886.11
–1312	A	E0	2,885.30
–1311	A	E1	2,884.49
–1310	A	E2	2,883.68
–1309	A	E3	2,882.87
–1308	A	E4	2,882.06
–1307	A	E5	2,881.26
–1306	A	E6	2,880.45
–1305	A	E7	2,879.64
–1304	A	E8	2,878.84
–1303	A	E9	2,878.03
–1302	A	EA	2,877.22
–1301	A	EB	2,876.42
–1300	A	EC	2,875.61
–1299	A	ED	2,874.81
–1298	A	EE	2,874.01

Table 8-2. Frequency Coefficients for Tone Generator (continued)

BCD	HEX BR5	HEX BR4	FREQUENCY
–1297	A	EF	2,873.20
–1296	A	F0	2,872.40
–1295	A	F1	2,871.60
–1294	A	F2	2,870.79
–1293	A	F3	2,869.99
–1292	A	F4	2,869.19
–1291	A	F5	2,868.39
–1290	A	F6	2,867.59
–1289	A	F7	2,866.79
–1288	A	F8	2,865.99
–1287	A	F9	2,865.19
–1286	A	FA	2,864.39
–1285	A	FB	2,863.59
–1284	A	FC	2,862.79
–1283	A	FD	2,862.00
–1282	A	FE	2,861.20
–1281	A	FF	2,860.40
–1280	B	00	2,859.60
–1279	B	01	2,858.81
–1278	B	02	2,858.01
–1277	B	03	2,857.22
–1276	B	04	2,856.42
–1275	B	05	2,855.63
–1274	B	06	2,854.83
–1273	B	07	2,854.04
–1272	B	08	2,853.25
–1271	B	09	2,852.45
–1270	B	0A	2,851.66
–1269	B	0B	2,850.87
–1268	B	0C	2,850.08
–1267	B	0D	2,849.28
–1266	B	0E	2,848.49
–1265	B	0F	2,847.70
–1264	B	10	2,846.91
–1263	B	11	2,846.12
–1262	B	12	2,845.33
–1261	B	13	2,844.54
–1260	B	14	2,843.75
–1259	B	15	2,842.97
–1258	B	16	2,842.18
–1257	B	17	2,841.39
–1256	B	18	2,840.60
–1255	B	19	2,839.82
–1254	B	1A	2,839.03
–1253	B	1B	2,838.24
–1252	B	1C	2,837.46
–1251	B	1D	2,836.67
–1250	B	1E	2,835.89
–1249	B	1F	2,835.10
–1248	B	20	2,834.32
–1247	B	21	2,833.53
–1246	B	22	2,832.75
–1245	B	23	2,831.97
–1244	B	24	2,831.18
–1243	B	25	2,830.40
–1242	B	26	2,829.62
–1241	B	27	2,828.84
–1240	B	28	2,828.06
–1239	B	29	2,827.28
–1238	B	2A	2,826.50
–1237	B	2B	2,825.72
–1236	B	2C	2,824.94
–1235	B	2D	2,824.16
–1234	B	2E	2,823.38
–1233	B	2F	2,822.60
–1232	B	30	2,821.82
–1231	B	31	2,821.04
–1230	B	32	2,820.26
–1229	B	33	2,819.49
–1228	B	34	2,818.71
–1227	B	35	2,817.93
–1226	B	36	2,817.16
–1225	B	37	2,816.38
–1224	B	38	2,815.60
–1223	B	39	2,814.83
–1222	B	3A	2,814.05
–1221	B	3B	2,813.28
–1220	B	3C	2,812.51
–1219	B	3D	2,811.73
–1218	B	3E	2,810.96
–1217	B	3F	2,810.19
–1216	B	40	2,809.41
–1215	B	41	2,808.64
–1214	B	42	2,807.87
–1213	B	43	2,807.10
–1212	B	44	2,806.32
–1211	B	45	2,805.55
–1210	B	46	2,804.78
–1209	B	47	2,804.01
–1208	B	48	2,803.24
–1207	B	49	2,802.47
–1206	B	4A	2,801.70
–1205	B	4B	2,800.93
–1204	B	4C	2,800.17
–1203	B	4D	2,799.40
–1202	B	4E	2,798.63
–1201	B	4F	2,797.86
–1200	B	50	2,797.09
–1199	B	51	2,796.33
–1198	B	52	2,795.56
–1197	B	53	2,794.79
–1196	B	54	2,794.03
–1195	B	55	2,793.26
–1194	B	56	2,792.50
–1193	B	57	2,791.73
–1192	B	58	2,790.97
–1191	B	59	2,790.20
–1190	B	5A	2,789.44
–1189	B	5B	2,788.68
–1188	B	5C	2,787.91
–1187	B	5D	2,787.15
–1186	B	5E	2,786.39
–1185	B	5F	2,785.62
–1184	B	60	2,784.86
–1183	B	61	2,784.10
–1182	B	62	2,783.34
–1181	B	63	2,782.58
–1180	B	64	2,781.82
–1179	B	65	2,781.06
–1178	B	66	2,780.30
–1177	B	67	2,779.54
–1176	B	68	2,778.78
–1175	B	69	2,778.02
–1174	B	6A	2,777.26
–1173	B	6B	2,776.50
–1172	B	6C	2,775.74
–1171	B	6D	2,774.98
–1170	B	6E	2,774.23
–1169	B	6F	2,773.47
–1168	B	70	2,772.71
–1167	B	71	2,771.95
–1166	B	72	2,771.20
–1165	B	73	2,770.44
–1164	B	74	2,769.69
–1163	B	75	2,768.93
–1162	B	76	2,768.18
–1161	B	77	2,767.42
–1160	B	78	2,766.67
–1159	B	79	2,765.91
–1158	B	7A	2,765.16
–1157	B	7B	2,764.40
–1156	B	7C	2,763.65
–1155	B	7D	2,762.90
–1154	B	7E	2,762.15
–1153	B	7F	2,761.39
–1152	B	80	2,760.64
–1151	B	81	2,759.89
–1150	B	82	2,759.14
–1149	B	83	2,758.39
–1148	B	84	2,757.64

Table 8-2. Frequency Coefficients for Tone Generator (continued)

BCD	HEX BR5	HEX BR4	FREQUENCY
–1147	B	85	2,756.89
–1146	B	86	2,756.14
–1145	B	87	2,755.39
–1144	B	88	2,754.64
–1143	B	89	2,753.89
–1142	B	8A	2,753.14
–1141	B	8B	2,752.39
–1140	B	8C	2,751.64
–1139	B	8D	2,750.89
–1138	B	8E	2,750.14
–1137	B	8F	2,749.40
–1136	B	90	2,748.65
–1135	B	91	2,747.90
–1134	B	92	2,747.15
–1133	B	93	2,746.41
–1132	B	94	2,745.66
–1131	B	95	2,744.92
–1130	B	96	2,744.17
–1129	B	97	2,743.43
–1128	B	98	2,742.68
–1127	B	99	2,741.94
–1126	B	9A	2,741.19
–1125	B	9B	2,740.45
–1124	B	9C	2,739.70
–1123	B	9D	2,738.96
–1122	B	9E	2,738.22
–1121	B	9F	2,737.47
–1120	B	A0	2,736.73
–1119	B	A1	2,735.99
–1118	B	A2	2,735.25
–1117	B	A3	2,734.50
–1116	B	A4	2,733.76
–1115	B	A5	2,733.02
–1114	B	A6	2,732.28
–1113	B	A7	2,731.54
–1112	B	A8	2,730.80
–1111	B	A9	2,730.06
–1110	B	AA	2,729.32
–1109	B	AB	2,728.58
–1108	B	AC	2,727.84
–1107	B	AD	2,727.10
–1106	B	AE	2,726.36
–1105	B	AF	2,725.62
–1104	B	B0	2,724.89
–1103	B	B1	2,724.15
–1102	B	B2	2,723.41
–1101	B	B3	2,722.67
–1100	B	B4	2,721.94
–1099	B	B5	2,721.20
–1098	B	B6	2,720.46
–1097	B	B7	2,719.73
–1096	B	B8	2,718.99
–1095	B	B9	2,718.25
–1094	B	BA	2,717.52
–1093	B	BB	2,716.78
–1092	B	BC	2,716.05
–1091	B	BD	2,715.31
–1090	B	BE	2,714.58
–1089	B	BF	2,713.84
–1088	B	C0	2,713.11
–1087	B	C1	2,712.38
–1086	B	C2	2,711.64
–1085	B	C3	2,710.91
–1084	B	C4	2,710.18
–1083	B	C5	2,709.44
–1082	B	C6	2,708.71
–1081	B	C7	2,707.98
–1080	B	C8	2,707.25
–1079	B	C9	2,706.52
–1078	B	CA	2,705.79
–1077	B	CB	2,705.05
–1076	B	CC	2,704.32
–1075	B	CD	2,703.59
–1074	B	CE	2,702.86
–1073	B	CF	2,702.13
–1072	B	D0	2,701.40
–1071	B	D1	2,700.67
–1070	B	D2	2,699.94
–1069	B	D3	2,699.21
–1068	B	D4	2,698.49
–1067	B	D5	2,697.76
–1066	B	D6	2,697.03
–1065	B	D7	2,696.30
–1064	B	D8	2,695.57
–1063	B	D9	2,694.85
–1062	B	DA	2,694.12
–1061	B	DB	2,693.39
–1060	B	DC	2,692.67
–1059	B	DD	2,691.94
–1058	B	DE	2,691.21
–1057	B	DF	2,690.49
–1056	B	E0	2,689.76
–1055	B	E1	2,689.04
–1054	B	E2	2,688.31
–1053	B	E3	2,687.59
–1052	B	E4	2,686.86
–1051	B	E5	2,686.14
–1050	B	E6	2,685.41
–1049	B	E7	2,684.69
–1048	B	E8	2,683.96
–1047	B	E9	2,683.24
–1046	B	EA	2,682.52
–1045	B	EB	2,681.79
–1044	B	EC	2,681.07
–1043	B	ED	2,680.35
–1042	B	EE	2,679.63
–1041	B	EF	2,678.90
–1040	B	F0	2,678.18
–1039	B	F1	2,677.46
–1038	B	F2	2,676.74
–1037	B	F3	2,676.02
–1036	B	F4	2,675.30
–1035	B	F5	2,674.58
–1034	B	F6	2,673.86
–1033	B	F7	2,673.14
–1032	B	F8	2,672.42
–1031	B	F9	2,671.70
–1030	B	FA	2,670.98
–1029	B	FB	2,670.26
–1028	B	FC	2,669.54
–1027	B	FD	2,668.82
–1026	B	FE	2,668.10
–1025	B	FF	2,667.38
–1024	C	00	2,666.67
–1023	C	01	2,665.95
–1022	C	02	2,665.23
–1021	C	03	2,664.51
–1020	C	04	2,663.80
–1019	C	05	2,663.08
–1018	C	06	2,662.36
–1017	C	07	2,661.65
–1016	C	08	2,660.93
–1015	C	09	2,660.22
–1014	C	0A	2,659.50
–1013	C	0B	2,658.78
–1012	C	0C	2,658.07
–1011	C	0D	2,657.35
–1010	C	0E	2,656.64
–1009	C	0F	2,655.92
–1008	C	10	2,655.21
–1007	C	11	2,654.50
–1006	C	12	2,653.78
–1005	C	13	2,653.07
–1004	C	14	2,652.36
–1003	C	15	2,651.64
–1002	C	16	2,650.93
–1001	C	17	2,650.22
–1000	C	18	2,649.50
–999	C	19	2,648.79
–998	C	1A	2,648.08

Table 8-2. Frequency Coefficients for Tone Generator (continued)

BCD	HEX BR5	HEX BR4	FREQUENCY
–997	C	1B	2,647.37
–996	C	1C	2,646.66
–995	C	1D	2,645.94
–994	C	1E	2,645.23
–993	C	1F	2,644.52
–992	C	20	2,643.81
–991	C	21	2,643.10
–990	C	22	2,642.39
–989	C	23	2,641.68
–988	C	24	2,640.97
–987	C	25	2,640.26
–986	C	26	2,639.55
–985	C	27	2,638.84
–984	C	28	2,638.13
–983	C	29	2,637.43
–982	C	2A	2,636.72
–981	C	2B	2,636.01
–980	C	2C	2,635.30
–979	C	2D	2,634.59
–978	C	2E	2,633.88
–977	C	2F	2,633.18
–976	C	30	2,632.47
–975	C	31	2,631.76
–974	C	32	2,631.06
–973	C	33	2,630.35
–972	C	34	2,629.64
–971	C	35	2,628.94
–970	C	36	2,628.23
–969	C	37	2,627.52
–968	C	38	2,626.82
–967	C	39	2,626.11
–966	C	3A	2,625.41
–965	C	3B	2,624.70
–964	C	3C	2,624.00
–963	C	3D	2,623.29
–962	C	3E	2,622.59
–961	C	3F	2,621.89
–960	C	40	2,621.18
–959	C	41	2,620.48
–958	C	42	2,619.77
–957	C	43	2,619.07
–956	C	44	2,618.37
–955	C	45	2,617.67
–954	C	46	2,616.96
–953	C	47	2,616.26
–952	C	48	2,615.56
–951	C	49	2,614.86
–950	C	4A	2,614.15
–949	C	4B	2,613.45
–948	C	4C	2,612.75
–947	C	4D	2,612.05
–946	C	4E	2,611.35
–945	C	4F	2,610.65
–944	C	50	2,609.95
–943	C	51	2,609.25
–942	C	52	2,608.55
–941	C	53	2,607.85
–940	C	54	2,607.15
–939	C	55	2,606.45
–938	C	56	2,605.75
–937	C	57	2,605.05
–936	C	58	2,604.35
–935	C	59	2,603.65
–934	C	5A	2,602.95
–933	C	5B	2,602.25
–932	C	5C	2,601.55
–931	C	5D	2,600.86
–930	C	5E	2,600.16
–929	C	5F	2,599.46
–928	C	60	2,598.76
–927	C	61	2,598.07
–926	C	62	2,597.37
–925	C	63	2,596.67
–924	C	64	2,595.98
–923	C	65	2,595.28
–922	C	66	2,594.58
–921	C	67	2,593.89
–920	C	68	2,593.19
–919	C	69	2,592.49
–918	C	6A	2,591.80
–917	C	6B	2,591.10
–916	C	6C	2,590.41
–915	C	6D	2,589.71
–914	C	6E	2,589.02
–913	C	6F	2,588.32
–912	C	70	2,587.63
–911	C	71	2,586.94
–910	C	72	2,586.24
–909	C	73	2,585.55
–908	C	74	2,584.85
–907	C	75	2,584.16
–906	C	76	2,583.47
–905	C	77	2,582.77
–904	C	78	2,582.08
–903	C	79	2,581.39
–902	C	7A	2,580.70
–901	C	7B	2,580.00
–900	C	7C	2,579.31
–899	C	7D	2,578.62
–898	C	7E	2,577.93
–897	C	7F	2,577.24
–896	C	80	2,576.54
–895	C	81	2,575.85
–894	C	82	2,575.16
–893	C	83	2,574.47
–892	C	84	2,573.78
–891	C	85	2,573.09
–890	C	86	2,572.40
–889	C	87	2,571.71
–888	C	88	2,571.02
–887	C	89	2,570.33
–886	C	8A	2,569.64
–885	C	8B	2,568.95
–884	C	8C	2,568.26
–883	C	8D	2,567.57
–882	C	8E	2,566.88
–881	C	8F	2,566.19
–880	C	90	2,565.51
–879	C	91	2,564.82
–878	C	92	2,564.13
–877	C	93	2,563.44
–876	C	94	2,562.75
–875	C	95	2,562.06
–874	C	96	2,561.38
–873	C	97	2,560.69
–872	C	98	2,560.00
–871	C	99	2,559.32
–870	C	9A	2,558.63
–869	C	9B	2,557.94
–868	C	9C	2,557.26
–867	C	9D	2,556.57
–866	C	9E	2,555.88
–865	C	9F	2,555.20
–864	C	A0	2,554.51
–863	C	A1	2,553.83
–862	C	A2	2,553.14
–861	C	A3	2,552.46
–860	C	A4	2,551.77
–859	C	A5	2,551.09
–858	C	A6	2,550.40
–857	C	A7	2,549.72
–856	C	A8	2,549.03
–855	C	A9	2,548.35
–854	C	AA	2,547.66
–853	C	AB	2,546.98
–852	C	AC	2,546.30
–851	C	AD	2,545.61
–850	C	AE	2,544.93
–849	C	AF	2,544.25
–848	C	B0	2,543.56

Table 8-2. Frequency Coefficients for Tone Generator (continued)

BCD	HEX BR5	HEX BR4	FREQUENCY
–847	C	B1	2,542.88
–846	C	B2	2,542.20
–845	C	B3	2,541.51
–844	C	B4	2,540.83
–843	C	B5	2,540.15
–842	C	B6	2,539.47
–841	C	B7	2,538.79
–840	C	B8	2,538.10
–839	C	B9	2,537.42
–838	C	BA	2,536.74
–837	C	BB	2,536.06
–836	C	BC	2,535.38
–835	C	BD	2,534.70
–834	C	BE	2,534.02
–833	C	BF	2,533.34
–832	C	C0	2,532.66
–831	C	C1	2,531.97
–830	C	C2	2,531.29
–829	C	C3	2,530.61
–828	C	C4	2,529.93
–827	C	C5	2,529.26
–826	C	C6	2,528.58
–825	C	C7	2,527.90
–824	C	C8	2,527.22
–823	C	C9	2,526.54
–822	C	CA	2,525.86
–821	C	CB	2,525.18
–820	C	CC	2,524.50
–819	C	CD	2,523.82
–818	C	CE	2,523.15
–817	C	CF	2,522.47
–816	C	D0	2,521.79
–815	C	D1	2,521.11
–814	C	D2	2,520.43
–813	C	D3	2,519.76
–812	C	D4	2,519.08
–811	C	D5	2,518.40
–810	C	D6	2,517.73
–809	C	D7	2,517.05
–808	C	D8	2,516.37
–807	C	D9	2,515.70
–806	C	DA	2,515.02
–805	C	DB	2,514.34
–804	C	DC	2,513.67
–803	C	DD	2,512.99
–802	C	DE	2,512.32
–801	C	DF	2,511.64
–800	C	E0	2,510.96
–799	C	E1	2,510.29
–798	C	E2	2,509.61
–797	C	E3	2,508.94
–796	C	E4	2,508.26
–795	C	E5	2,507.59
–794	C	E6	2,506.91
–793	C	E7	2,506.24
–792	C	E8	2,505.57
–791	C	E9	2,504.89
–790	C	EA	2,504.22
–789	C	EB	2,503.54
–788	C	EC	2,502.87
–787	C	ED	2,502.20
–786	C	EE	2,501.52
–785	C	EF	2,500.85
–784	C	F0	2,500.18
–783	C	F1	2,499.50
–782	C	F2	2,498.83
–781	C	F3	2,498.16
–780	C	F4	2,497.49
–779	C	F5	2,496.81
–778	C	F6	2,496.14
–777	C	F7	2,495.47
–776	C	F8	2,494.80
–775	C	F9	2,494.13
–774	C	FA	2,493.46
–773	C	FB	2,492.78
–772	C	FC	2,492.11
–771	C	FD	2,491.44
–770	C	FE	2,490.77
–769	C	FF	2,490.10
–768	D	00	2,489.43
–767	D	01	2,488.76
–766	D	02	2,488.09
–765	D	03	2,487.42
–764	D	04	2,486.75
–763	D	05	2,486.08
–762	D	06	2,485.41
–761	D	07	2,484.74
–760	D	08	2,484.07
–759	D	09	2,483.40
–758	D	0A	2,482.73
–757	D	0B	2,482.06
–756	D	0C	2,481.39
–755	D	0D	2,480.72
–754	D	0E	2,480.05
–753	D	0F	2,479.39
–752	D	10	2,478.72
–751	D	11	2,478.05
–750	D	12	2,477.38
–749	D	13	2,476.71
–748	D	14	2,476.04
–747	D	15	2,475.38
–746	D	16	2,474.71
–745	D	17	2,474.04
–744	D	18	2,473.37
–743	D	19	2,472.71
–742	D	1A	2,472.04
–741	D	1B	2,471.37
–740	D	1C	2,470.71
–739	D	1D	2,470.04
–738	D	1E	2,469.37
–737	D	1F	2,468.71
–736	D	20	2,468.04
–735	D	21	2,467.37
–734	D	22	2,466.71
–733	D	23	2,466.04
–732	D	24	2,465.38
–731	D	25	2,464.71
–730	D	26	2,464.05
–729	D	27	2,463.38
–728	D	28	2,462.72
–727	D	29	2,462.05
–726	D	2A	2,461.38
–725	D	2B	2,460.72
–724	D	2C	2,460.06
–723	D	2D	2,459.39
–722	D	2E	2,458.73
–721	D	2F	2,458.06
–720	D	30	2,457.40
–719	D	31	2,456.73
–718	D	32	2,456.07
–717	D	33	2,455.41
–716	D	34	2,454.74
–715	D	35	2,454.08
–714	D	36	2,453.42
–713	D	37	2,452.75
–712	D	38	2,452.09
–711	D	39	2,451.43
–710	D	3A	2,450.76
–709	D	3B	2,450.10
–708	D	3C	2,449.44
–707	D	3D	2,448.78
–706	D	3E	2,448.11
–705	D	3F	2,447.45
–704	D	40	2,446.79
–703	D	41	2,446.13
–702	D	42	2,445.47
–701	D	43	2,444.80
–700	D	44	2,444.14
–699	D	45	2,443.48
–698	D	46	2,442.82

Table 8-2. Frequency Coefficients for Tone Generator (continued)

BCD	HEX BR5	HEX BR4	FREQUENCY
–697	D	47	2,442.16
–696	D	48	2,441.50
–695	D	49	2,440.84
–694	D	4A	2,440.17
–693	D	4B	2,439.51
–692	D	4C	2,438.85
–691	D	4D	2,438.19
–690	D	4E	2,437.53
–689	D	4F	2,436.87
–688	D	50	2,436.21
–687	D	51	2,435.55
–686	D	52	2,434.89
–685	D	53	2,434.23
–684	D	54	2,433.57
–683	D	55	2,432.91
–682	D	56	2,432.25
–681	D	57	2,431.59
–680	D	58	2,430.94
–679	D	59	2,430.28
–678	D	5A	2,429.62
–677	D	5B	2,428.96
–676	D	5C	2,428.30
–675	D	5D	2,427.64
–674	D	5E	2,426.98
–673	D	5F	2,426.33
–672	D	60	2,425.67
–671	D	61	2,425.01
–670	D	62	2,424.35
–669	D	63	2,423.69
–668	D	64	2,423.04
–667	D	65	2,422.38
–666	D	66	2,421.72
–665	D	67	2,421.06
–664	D	68	2,420.41
–663	D	69	2,419.75
–662	D	6A	2,419.09
–661	D	6B	2,418.43
–660	D	6C	2,417.78
–659	D	6D	2,417.12
–658	D	6E	2,416.46
–657	D	6F	2,415.81
–656	D	70	2,415.15
–655	D	71	2,414.50
–654	D	72	2,413.84
–653	D	73	2,413.18
–652	D	74	2,412.53
–651	D	75	2,411.87
–650	D	76	2,411.22
–649	D	77	2,410.56
–648	D	78	2,409.91
–647	D	79	2,409.25
–646	D	7A	2,408.59
–645	D	7B	2,407.94
–644	D	7C	2,407.28
–643	D	7D	2,406.63
–642	D	7E	2,405.97
–641	D	7F	2,405.32
–640	D	80	2,404.67
–639	D	81	2,404.01
–638	D	82	2,403.36
–637	D	83	2,402.70
–636	D	84	2,402.05
–635	D	85	2,401.39
–634	D	86	2,400.74
–633	D	87	2,400.09
–632	D	88	2,399.43
–631	D	89	2,398.78
–630	D	8A	2,398.13
–629	D	8B	2,397.47
–628	D	8C	2,396.82
–627	D	8D	2,396.17
–626	D	8E	2,395.51
–625	D	8F	2,394.86
–624	D	90	2,394.21
–623	D	91	2,393.56
–622	D	92	2,392.90
–621	D	93	2,392.25
–620	D	94	2,391.60
–619	D	95	2,390.95
–618	D	96	2,390.29
–617	D	97	2,389.64
–616	D	98	2,388.99
–615	D	99	2,388.34
–614	D	9A	2,387.69
–613	D	9B	2,387.03
–612	D	9C	2,386.38
–611	D	9D	2,385.73
–610	D	9E	2,385.08
–609	D	9F	2,384.43
–608	D	A0	2,383.78
–607	D	A1	2,383.13
–606	D	A2	2,382.48
–605	D	A3	2,381.83
–604	D	A4	2,381.17
–603	D	A5	2,380.52
–602	D	A6	2,379.87
–601	D	A7	2,379.22
–600	D	A8	2,378.57
–599	D	A9	2,377.92
–598	D	AA	2,377.27
–597	D	AB	2,376.62
–596	D	AC	2,375.97
–595	D	AD	2,375.32
–594	D	AE	2,374.67
–593	D	AF	2,374.02
–592	D	B0	2,373.37
–591	D	B1	2,372.72
–590	D	B2	2,372.08
–589	D	B3	2,371.43
–588	D	B4	2,370.78
–587	D	B5	2,370.13
–586	D	B6	2,369.48
–585	D	B7	2,368.83
–584	D	B8	2,368.18
–583	D	B9	2,367.53
–582	D	BA	2,366.88
–581	D	BB	2,366.24
–580	D	BC	2,365.59
–579	D	BD	2,364.94
–578	D	BE	2,364.29
–577	D	BF	2,363.64
–576	D	C0	2,363.00
–575	D	C1	2,362.35
–574	D	C2	2,361.70
–573	D	C3	2,361.05
–572	D	C4	2,360.41
–571	D	C5	2,359.76
–570	D	C6	2,359.11
–569	D	C7	2,358.46
–568	D	C8	2,357.82
–567	D	C9	2,357.17
–566	D	CA	2,356.52
–565	D	CB	2,355.88
–564	D	CC	2,355.23
–563	D	CD	2,354.58
–562	D	CE	2,353.94
–561	D	CF	2,353.29
–560	D	D0	2,352.64
–559	D	D1	2,352.00
–558	D	D2	2,351.35
–557	D	D3	2,350.70
–556	D	D4	2,350.06
–555	D	D5	2,349.41
–554	D	D6	2,348.77
–553	D	D7	2,348.12
–552	D	D8	2,347.48
–551	D	D9	2,346.83
–550	D	DA	2,346.18
–549	D	DB	2,345.54
–548	D	DC	2,344.89

Table 8-2. Frequency Coefficients for Tone Generator (continued)

BCD	HEX BR5	HEX BR4	FREQUENCY
–547	D	DD	2,344.25
–546	D	DE	2,343.60
–545	D	DF	2,342.96
–544	D	E0	2,342.31
–543	D	E1	2,341.67
–542	D	E2	2,341.02
–541	D	E3	2,340.38
–540	D	E4	2,339.73
–539	D	E5	2,339.09
–538	D	E6	2,338.45
–537	D	E7	2,337.80
–536	D	E8	2,337.16
–535	D	E9	2,336.51
–534	D	EA	2,335.87
–533	D	EB	2,335.23
–532	D	EC	2,334.58
–531	D	ED	2,333.94
–530	D	EE	2,333.29
–529	D	EF	2,332.65
–528	D	F0	2,332.01
–527	D	F1	2,331.36
–526	D	F2	2,330.72
–525	D	F3	2,330.08
–524	D	F4	2,329.43
–523	D	F5	2,328.79
–522	D	F6	2,328.15
–521	D	F7	2,327.50
–520	D	F8	2,326.86
–519	D	F9	2,326.22
–518	D	FA	2,325.58
–517	D	FB	2,324.93
–516	D	FC	2,324.29
–515	D	FD	2,323.65
–514	D	FE	2,323.01
–513	D	FF	2,322.36
–512	E	00	2,321.72
–511	E	01	2,321.08
–510	E	02	2,320.44
–509	E	03	2,319.80
–508	E	04	2,319.15
–507	E	05	2,318.51
–506	E	06	2,317.87
–505	E	07	2,317.23
–504	E	08	2,316.59
–503	E	09	2,315.95
–502	E	0A	2,315.31
–501	E	0B	2,314.66
–500	E	0C	2,314.02
–499	E	0D	2,313.38
–498	E	0E	2,312.74
–497	E	0F	2,312.10
–496	E	10	2,311.46
–495	E	11	2,310.82
–494	E	12	2,310.18
–493	E	13	2,309.54
–492	E	14	2,308.90
–491	E	15	2,308.26
–490	E	16	2,307.62
–489	E	17	2,306.98
–488	E	18	2,306.34
–487	E	19	2,305.70
–486	E	1A	2,305.06
–485	E	1B	2,304.42
–484	E	1C	2,303.78
–483	E	1D	2,303.14
–482	E	1E	2,302.50
–481	E	1F	2,301.86
–480	E	20	2,301.22
–479	E	21	2,300.58
–478	E	22	2,299.94
–477	E	23	2,299.30
–476	E	24	2,298.66
–475	E	25	2,298.02
–474	E	26	2,297.38
–473	E	27	2,296.74
–472	E	28	2,296.10
–471	E	29	2,295.46
–470	E	2A	2,294.83
–469	E	2B	2,294.19
–468	E	2C	2,293.55
–467	E	2D	2,292.91
–466	E	2E	2,292.27
–465	E	2F	2,291.63
–464	E	30	2,291.00
–463	E	31	2,290.36
–462	E	32	2,289.72
–461	E	33	2,289.08
–460	E	34	2,288.44
–459	E	35	2,287.80
–458	E	36	2,287.17
–457	E	37	2,286.53
–456	E	38	2,285.89
–455	E	39	2,285.25
–454	E	3A	2,284.62
–453	E	3B	2,283.98
–452	E	3C	2,283.34
–451	E	3D	2,282.70
–450	E	3E	2,282.07
–449	E	3F	2,281.43
–448	E	40	2,280.79
–447	E	41	2,280.15
–446	E	42	2,279.52
–445	E	43	2,278.88
–444	E	44	2,278.24
–443	E	45	2,277.61
–442	E	46	2,276.97
–441	E	47	2,276.33
–440	E	48	2,275.70
–439	E	49	2,275.06
–438	E	4A	2,274.42
–437	E	4B	2,273.79
–436	E	4C	2,273.15
–435	E	4D	2,272.51
–434	E	4E	2,271.88
–433	E	4F	2,271.24
–432	E	50	2,270.61
–431	E	51	2,269.97
–430	E	52	2,269.33
–429	E	53	2,268.70
–428	E	54	2,268.06
–427	E	55	2,267.43
–426	E	56	2,266.79
–425	E	57	2,266.16
–424	E	58	2,265.52
–423	E	59	2,264.89
–422	E	5A	2,264.25
–421	E	5B	2,263.61
–420	E	5C	2,262.98
–419	E	5D	2,262.34
–418	E	5E	2,261.71
–417	E	5F	2,261.07
–416	E	60	2,260.44
–415	E	61	2,259.80
–414	E	62	2,259.17
–413	E	63	2,258.53
–412	E	64	2,257.90
–411	E	65	2,257.27
–410	E	66	2,256.63
–409	E	67	2,256.00
–408	E	68	2,255.36
–407	E	69	2,254.73
–406	E	6A	2,254.09
–405	E	6B	2,253.46
–404	E	6C	2,252.82
–403	E	6D	2,252.19
–402	E	6E	2,251.56
–401	E	6F	2,250.92
–400	E	70	2,250.29
–399	E	71	2,249.65
–398	E	72	2,249.02

Table 8-2. Frequency Coefficients for Tone Generator (continued)

BCD	HEX BR5	HEX BR4	FREQUENCY
–397	E	73	2,248.39
–396	E	74	2,247.75
–395	E	75	2,247.12
–394	E	76	2,246.49
–393	E	77	2,245.85
–392	E	78	2,245.22
–391	E	79	2,244.59
–390	E	7A	2,243.95
–389	E	7B	2,243.32
–388	E	7C	2,242.69
–387	E	7D	2,242.05
–386	E	7E	2,241.42
–385	E	7F	2,240.79
–384	E	80	2,240.15
–383	E	81	2,239.52
–382	E	82	2,238.89
–381	E	83	2,238.26
–380	E	84	2,237.62
–379	E	85	2,236.99
–378	E	86	2,236.36
–377	E	87	2,235.72
–376	E	88	2,235.09
–375	E	89	2,234.46
–374	E	8A	2,233.83
–373	E	8B	2,233.20
–372	E	8C	2,232.56
–371	E	8D	2,231.93
–370	E	8E	2,231.30
–369	E	8F	2,230.67
–368	E	90	2,230.03
–367	E	91	2,229.40
–366	E	92	2,228.77
–365	E	93	2,228.14
–364	E	94	2,227.51
–363	E	95	2,226.88
–362	E	96	2,226.24
–361	E	97	2,225.61
–360	E	98	2,224.98
–359	E	99	2,224.35
–358	E	9A	2,223.72
–357	E	9B	2,223.09
–356	E	9C	2,222.45
–355	E	9D	2,221.82
–354	E	9E	2,221.19
–353	E	9F	2,220.56
–352	E	A0	2,219.93
–351	E	A1	2,219.30
–350	E	A2	2,218.67
–349	E	A3	2,218.04
–348	E	A4	2,217.41
–347	E	A5	2,216.78
–346	E	A6	2,216.14
–345	E	A7	2,215.51
–344	E	A8	2,214.88
–343	E	A9	2,214.25
–342	E	AA	2,213.62
–341	E	AB	2,212.99
–340	E	AC	2,212.36
–339	E	AD	2,211.73
–338	E	AE	2,211.10
–337	E	AF	2,210.47
–336	E	B0	2,209.84
–335	E	B1	2,209.21
–334	E	B2	2,208.58
–333	E	B3	2,207.95
–332	E	B4	2,207.32
–331	E	B5	2,206.69
–330	E	B6	2,206.06
–329	E	B7	2,205.43
–328	E	B8	2,204.80
–327	E	B9	2,204.17
–326	E	BA	2,203.54
–325	E	BB	2,202.91
–324	E	BC	2,202.28
–323	E	BD	2,201.65
–322	E	BE	2,201.02
–321	E	BF	2,200.39
–320	E	C0	2,199.76
–319	E	C1	2,199.13
–318	E	C2	2,198.50
–317	E	C3	2,197.87
–316	E	C4	2,197.24
–315	E	C5	2,196.62
–314	E	C6	2,195.99
–313	E	C7	2,195.36
–312	E	C8	2,194.73
–311	E	C9	2,194.10
–310	E	CA	2,193.47
–309	E	CB	2,192.84
–308	E	CC	2,192.21
–307	E	CD	2,191.58
–306	E	CE	2,190.95
–305	E	CF	2,190.33
–304	E	D0	2,189.70
–303	E	D1	2,189.07
–302	E	D2	2,188.44
–301	E	D3	2,187.81
–300	E	D4	2,187.18
–299	E	D5	2,186.55
–298	E	D6	2,185.93
–297	E	D7	2,185.30
–296	E	D8	2,184.67
–295	E	D9	2,184.04
–294	E	DA	2,183.41
–293	E	DB	2,182.79
–292	E	DC	2,182.16
–291	E	DD	2,181.53
–290	E	DE	2,180.90
–289	E	DF	2,180.27
–288	E	E0	2,179.64
–287	E	E1	2,179.02
–286	E	E2	2,178.39
–285	E	E3	2,177.76
–284	E	E4	2,177.13
–283	E	E5	2,176.51
–282	E	E6	2,175.88
–281	E	E7	2,175.25
–280	E	E8	2,174.62
–279	E	E9	2,174.00
–278	E	EA	2,173.37
–277	E	EB	2,172.74
–276	E	EC	2,172.11
–275	E	ED	2,171.49
–274	E	EE	2,170.86
–273	E	EF	2,170.23
–272	E	F0	2,169.60
–271	E	F1	2,168.98
–270	E	F2	2,168.35
–269	E	F3	2,167.72
–268	E	F4	2,167.09
–267	E	F5	2,166.47
–266	E	F6	2,165.84
–265	E	F7	2,165.21
–264	E	F8	2,164.59
–263	E	F9	2,163.96
–262	E	FA	2,163.33
–261	E	FB	2,162.71
–260	E	FC	2,162.08
–259	E	FD	2,161.45
–258	E	FE	2,160.83
–257	E	FF	2,160.20
–256	F	00	2,159.57
–255	F	01	2,158.95
–254	F	02	2,158.32
–253	F	03	2,157.69
–252	F	04	2,157.07
–251	F	05	2,156.44
–250	F	06	2,155.81
–249	F	07	2,155.19
–248	F	08	2,154.56

Table 8-2. Frequency Coefficients for Tone Generator (continued)

BCD	HEX BR5	HEX BR4	FREQUENCY
–247	F	09	2,153.93
–246	F	0A	2,153.31
–245	F	0B	2,152.68
–244	F	0C	2,152.06
–243	F	0D	2,151.43
–242	F	0E	2,150.80
–241	F	0F	2,150.18
–240	F	10	2,149.55
–239	F	11	2,148.93
–238	F	12	2,148.30
–237	F	13	2,147.67
–236	F	14	2,147.05
–235	F	15	2,146.42
–234	F	16	2,145.80
–233	F	17	2,145.17
–232	F	18	2,144.54
–231	F	19	2,143.92
–230	F	1A	2,143.29
–229	F	1B	2,142.67
–228	F	1C	2,142.04
–227	F	1D	2,141.42
–226	F	1E	2,140.79
–225	F	1F	2,140.17
–224	F	20	2,139.54
–223	F	21	2,138.91
–222	F	22	2,138.29
–221	F	23	2,137.66
–220	F	24	2,137.04
–219	F	25	2,136.41
–218	F	26	2,135.79
–217	F	27	2,135.16
–216	F	28	2,134.54
–215	F	29	2,133.91
–214	F	2A	2,133.29
–213	F	2B	2,132.66
–212	F	2C	2,132.04
–211	F	2D	2,131.41
–210	F	2E	2,130.79
–209	F	2F	2,130.16
–208	F	30	2,129.54
–207	F	31	2,128.91
–206	F	32	2,128.29
–205	F	33	2,127.66
–204	F	34	2,127.04
–203	F	35	2,126.41
–202	F	36	2,125.79
–201	F	37	2,125.16
–200	F	38	2,124.54
–199	F	39	2,123.91
–198	F	3A	2,123.29
–197	F	3B	2,122.66
–196	F	3C	2,122.04
–195	F	3D	2,121.42
–194	F	3E	2,120.79
–193	F	3F	2,120.17
–192	F	40	2,119.54
–191	F	41	2,118.92
–190	F	42	2,118.29
–189	F	43	2,117.67
–188	F	44	2,117.04
–187	F	45	2,116.42
–186	F	46	2,115.80
–185	F	47	2,115.17
–184	F	48	2,114.55
–183	F	49	2,113.92
–182	F	4A	2,113.30
–181	F	4B	2,112.67
–180	F	4C	2,112.05
–179	F	4D	2,111.43
–178	F	4E	2,110.80
–177	F	4F	2,110.18
–176	F	50	2,109.55
–175	F	51	2,108.93
–174	F	52	2,108.31
–173	F	53	2,107.68
–172	F	54	2,107.06
–171	F	55	2,106.43
–170	F	56	2,105.81
–169	F	57	2,105.19
–168	F	58	2,104.56
–167	F	59	2,103.94
–166	F	5A	2,103.32
–165	F	5B	2,102.69
–164	F	5C	2,102.07
–163	F	5D	2,101.44
–162	F	5E	2,100.82
–161	F	5F	2,100.20
–160	F	60	2,099.57
–159	F	61	2,098.95
–158	F	62	2,098.33
–157	F	63	2,097.70
–156	F	64	2,097.08
–155	F	65	2,096.46
–154	F	66	2,095.83
–153	F	67	2,095.21
–152	F	68	2,094.59
–151	F	69	2,093.96
–150	F	6A	2,093.34
–149	F	6B	2,092.72
–148	F	6C	2,092.09
–147	F	6D	2,091.47
–146	F	6E	2,090.85
–145	F	6F	2,090.22
–144	F	70	2,089.60
–143	F	71	2,088.98
–142	F	72	2,088.35
–141	F	73	2,087.73
–140	F	74	2,087.11
–139	F	75	2,086.48
–138	F	76	2,085.86
–137	F	77	2,085.24
–136	F	78	2,084.61
–135	F	79	2,083.99
–134	F	7A	2,083.37
–133	F	7B	2,082.74
–132	F	7C	2,082.12
–131	F	7D	2,081.50
–130	F	7E	2,080.88
–129	F	7F	2,080.25
–128	F	80	2,079.63
–127	F	81	2,079.01
–126	F	82	2,078.38
–125	F	83	2,077.76
–124	F	84	2,077.14
–123	F	85	2,076.52
–122	F	86	2,075.89
–121	F	87	2,075.27
–120	F	88	2,074.65
–119	F	89	2,074.02
–118	F	8A	2,073.40
–117	F	8B	2,072.78
–116	F	8C	2,072.16
–115	F	8D	2,071.53
–114	F	8E	2,070.91
–113	F	8F	2,070.29
–112	F	90	2,069.67
–111	F	91	2,069.04
–110	F	92	2,068.42
–109	F	93	2,067.80
–108	F	94	2,067.17
–107	F	95	2,066.55
–106	F	96	2,065.93
–105	F	97	2,065.31
–104	F	98	2,064.68
–103	F	99	2,064.06
–102	F	9A	2,063.44
–101	F	9B	2,062.82
–100	F	9C	2,062.19
–99	F	9D	2,061.57
–98	F	9E	2,060.95

Table 8-2. Frequency Coefficients for Tone Generator (continued)

BCD	HEX BR5	HEX BR4	FREQUENCY
–97	F	9F	2,060.33
–96	F	A0	2,059.70
–95	F	A1	2,059.08
–94	F	A2	2,058.46
–93	F	A3	2,057.84
–92	F	A4	2,057.22
–91	F	A5	2,056.59
–90	F	A6	2,055.97
–89	F	A7	2,055.35
–88	F	A8	2,054.73
–87	F	A9	2,054.10
–86	F	AA	2,053.48
–85	F	AB	2,052.86
–84	F	AC	2,052.24
–83	F	AD	2,051.62
–82	F	AE	2,050.99
–81	F	AF	2,050.37
–80	F	B0	2,049.75
–79	F	B1	2,049.13
–78	F	B2	2,048.50
–77	F	B3	2,047.88
–76	F	B4	2,047.26
–75	F	B5	2,046.64
–74	F	B6	2,046.02
–73	F	B7	2,045.39
–72	F	B8	2,044.77
–71	F	B9	2,044.15
–70	F	BA	2,043.53
–69	F	BB	2,042.91
–68	F	BC	2,042.28
–67	F	BD	2,041.66
–66	F	BE	2,041.04
–65	F	BF	2,040.42
–64	F	C0	2,039.80
–63	F	C1	2,039.17
–62	F	C2	2,038.55
–61	F	C3	2,037.93
–60	F	C4	2,037.31
–59	F	C5	2,036.69
–58	F	C6	2,036.06
–57	F	C7	2,035.44
–56	F	C8	2,034.82
–55	F	C9	2,034.20
–54	F	CA	2,033.58
–53	F	CB	2,032.95
–52	F	CC	2,032.33
–51	F	CD	2,031.71
–50	F	CE	2,031.09
–49	F	CF	2,030.47
–48	F	D0	2,029.84
–47	F	D1	2,029.22
–46	F	D2	2,028.60
–45	F	D3	2,027.98
–44	F	D4	2,027.36
–43	F	D5	2,026.74
–42	F	D6	2,026.11
–41	F	D7	2,025.49
–40	F	D8	2,024.87
–39	F	D9	2,024.25
–38	F	DA	2,023.63
–37	F	DB	2,023.00
–36	F	DC	2,022.38
–35	F	DD	2,021.76
–34	F	DE	2,021.14
–33	F	DF	2,020.52
–32	F	E0	2,019.90
–31	F	E1	2,019.27
–30	F	E2	2,018.65
–29	F	E3	2,018.03
–28	F	E4	2,017.41
–27	F	E5	2,016.79
–26	F	E6	2,016.16
–25	F	E7	2,015.54
–24	F	E8	2,014.92
–23	F	E9	2,014.30
–22	F	EA	2,013.68
–21	F	EB	2,013.06
–20	F	EC	2,012.43
–19	F	ED	2,011.81
–18	F	EE	2,011.19
–17	F	EF	2,010.57
–16	F	F0	2,009.95
–15	F	F1	2,009.33
–14	F	F2	2,008.70
–13	F	F3	2,008.08
–12	F	F4	2,007.46
–11	F	F5	2,006.84
–10	F	F6	2,006.22
–9	F	F7	2,005.60
–8	F	F8	2,004.97
–7	F	F9	2,004.35
–6	F	FA	2,003.73
–5	F	FB	2,003.11
–4	F	FC	2,002.49
–3	F	FD	2,001.87
–2	F	FE	2,001.24
–1	F	FF	2,000.62
0	0	00	2,000.00
1	0	01	1,999.38
2	0	02	1,998.76
3	0	03	1,998.13
4	0	04	1,997.51
5	0	05	1,996.89
6	0	06	1,996.27
7	0	07	1,995.65
8	0	08	1,995.03
9	0	09	1,994.40
10	0	0A	1,993.78
11	0	0B	1,993.16
12	0	0C	1,992.54
13	0	0D	1,991.92
14	0	0E	1,991.30
15	0	0F	1,990.67
16	0	10	1,990.05
17	0	11	1,989.43
18	0	12	1,988.81
19	0	13	1,988.19
20	0	14	1,987.57
21	0	15	1,986.94
22	0	16	1,986.32
23	0	17	1,985.70
24	0	18	1,985.08
25	0	19	1,984.46
26	0	1A	1,983.84
27	0	1B	1,983.21
28	0	1C	1,982.59
29	0	1D	1,981.97
30	0	1E	1,981.35
31	0	1F	1,980.73
32	0	20	1,980.10
33	0	21	1,979.48
34	0	22	1,978.86
35	0	23	1,978.24
36	0	24	1,977.62
37	0	25	1,977.00
38	0	26	1,976.37
39	0	27	1,975.75
40	0	28	1,975.13
41	0	29	1,974.51
42	0	2A	1,973.89
43	0	2B	1,973.26
44	0	2C	1,972.64
45	0	2D	1,972.02
46	0	2E	1,971.40
47	0	2F	1,970.78
48	0	30	1,970.16
49	0	31	1,969.53
50	0	32	1,968.91
51	0	33	1,968.29
52	0	34	1,967.67

Table 8-2. Frequency Coefficients for Tone Generator (continued)

BCD	HEX BR5	HEX BR4	FREQUENCY
53	0	35	1,967.05
54	0	36	1,966.42
55	0	37	1,965.80
56	0	38	1,965.18
57	0	39	1,964.56
58	0	3A	1,963.94
59	0	3B	1,963.31
60	0	3C	1,962.69
61	0	3D	1,962.07
62	0	3E	1,961.45
63	0	3F	1,960.83
64	0	40	1,960.20
65	0	41	1,959.58
66	0	42	1,958.96
67	0	43	1,958.34
68	0	44	1,957.72
69	0	45	1,957.09
70	0	46	1,956.47
71	0	47	1,955.85
72	0	48	1,955.23
73	0	49	1,954.61
74	0	4A	1,953.98
75	0	4B	1,953.36
76	0	4C	1,952.74
77	0	4D	1,952.12
78	0	4E	1,951.50
79	0	4F	1,950.87
80	0	50	1,950.25
81	0	51	1,949.63
82	0	52	1,949.01
83	0	53	1,948.38
84	0	54	1,947.76
85	0	55	1,947.14
86	0	56	1,946.52
87	0	57	1,945.90
88	0	58	1,945.27
89	0	59	1,944.65
90	0	5A	1,944.03
91	0	5B	1,943.41
92	0	5C	1,942.78
93	0	5D	1,942.16
94	0	5E	1,941.54
95	0	5F	1,940.92
96	0	60	1,940.30
97	0	61	1,939.67
98	0	62	1,939.05
99	0	63	1,938.43
100	0	64	1,937.81
101	0	65	1,937.18
102	0	66	1,936.56
103	0	67	1,935.94
104	0	68	1,935.32
105	0	69	1,934.69
106	0	6A	1,934.07
107	0	6B	1,933.45
108	0	6C	1,932.83
109	0	6D	1,932.20
110	0	6E	1,931.58
111	0	6F	1,930.96
112	0	70	1,930.33
113	0	71	1,929.71
114	0	72	1,929.09
115	0	73	1,928.47
116	0	74	1,927.84
117	0	75	1,927.22
118	0	76	1,926.60
119	0	77	1,925.98
120	0	78	1,925.35
121	0	79	1,924.73
122	0	7A	1,924.11
123	0	7B	1,923.48
124	0	7C	1,922.86
125	0	7D	1,922.24
126	0	7E	1,921.62
127	0	7F	1,920.99
128	0	80	1,920.37
129	0	81	1,919.75
130	0	82	1,919.12
131	0	83	1,918.50
132	0	84	1,917.88
133	0	85	1,917.26
134	0	86	1,916.63
135	0	87	1,916.01
136	0	88	1,915.39
137	0	89	1,914.76
138	0	8A	1,914.14
139	0	8B	1,913.52
140	0	8C	1,912.89
141	0	8D	1,912.27
142	0	8E	1,911.65
143	0	8F	1,911.02
144	0	90	1,910.40
145	0	91	1,909.78
146	0	92	1,909.15
147	0	93	1,908.53
148	0	94	1,907.91
149	0	95	1,907.28
150	0	96	1,906.66
151	0	97	1,906.04
152	0	98	1,905.41
153	0	99	1,904.79
154	0	9A	1,904.17
155	0	9B	1,903.54
156	0	9C	1,902.92
157	0	9D	1,902.30
158	0	9E	1,901.67
159	0	9F	1,901.05
160	0	A0	1,900.43
161	0	A1	1,899.80
162	0	A2	1,899.18
163	0	A3	1,898.56
164	0	A4	1,897.93
165	0	A5	1,897.31
166	0	A6	1,896.68
167	0	A7	1,896.06
168	0	A8	1,895.44
169	0	A9	1,894.81
170	0	AA	1,894.19
171	0	AB	1,893.57
172	0	AC	1,892.94
173	0	AD	1,892.32
174	0	AE	1,891.69
175	0	AF	1,891.07
176	0	B0	1,890.45
177	0	B1	1,889.82
178	0	B2	1,889.20
179	0	B3	1,888.57
180	0	B4	1,887.95
181	0	B5	1,887.33
182	0	B6	1,886.70
183	0	B7	1,886.08
184	0	B8	1,885.45
185	0	B9	1,884.83
186	0	BA	1,884.20
187	0	BB	1,883.58
188	0	BC	1,882.96
189	0	BD	1,882.33
190	0	BE	1,881.71
191	0	BF	1,881.08
192	0	C0	1,880.46
193	0	C1	1,879.83
194	0	C2	1,879.21
195	0	C3	1,878.58
196	0	C4	1,877.96
197	0	C5	1,877.34
198	0	C6	1,876.71
199	0	C7	1,876.09
200	0	C8	1,875.46
201	0	C9	1,874.84
202	0	CA	1,874.21

Table 8-2. Frequency Coefficients for Tone Generator (continued)

BCD	HEX BR5	HEX BR4	FREQUENCY
203	0	CB	1,873.59
204	0	CC	1,872.96
205	0	CD	1,872.34
206	0	CE	1,871.71
207	0	CF	1,871.09
208	0	D0	1,870.46
209	0	D1	1,869.84
210	0	D2	1,869.21
211	0	D3	1,868.59
212	0	D4	1,867.96
213	0	D5	1,867.34
214	0	D6	1,866.71
215	0	D7	1,866.09
216	0	D8	1,865.46
217	0	D9	1,864.84
218	0	DA	1,864.21
219	0	DB	1,863.59
220	0	DC	1,862.96
221	0	DD	1,862.34
222	0	DE	1,861.71
223	0	DF	1,861.09
224	0	E0	1,860.46
225	0	E1	1,859.83
226	0	E2	1,859.21
227	0	E3	1,858.58
228	0	E4	1,857.96
229	0	E5	1,857.33
230	0	E6	1,856.71
231	0	E7	1,856.08
232	0	E8	1,855.46
233	0	E9	1,854.83
234	0	EA	1,854.20
235	0	EB	1,853.58
236	0	EC	1,852.95
237	0	ED	1,852.33
238	0	EE	1,851.70
239	0	EF	1,851.07
240	0	F0	1,850.45
241	0	F1	1,849.82
242	0	F2	1,849.20
243	0	F3	1,848.57
244	0	F4	1,847.94
245	0	F5	1,847.32
246	0	F6	1,846.69
247	0	F7	1,846.07
248	0	F8	1,845.44
249	0	F9	1,844.81
250	0	FA	1,844.19
251	0	FB	1,843.56
252	0	FC	1,842.93
253	0	FD	1,842.31
254	0	FE	1,841.68
255	0	FF	1,841.05
256	1	00	1,840.43
257	1	01	1,839.80
258	1	02	1,839.17
259	1	03	1,838.55
260	1	04	1,837.92
261	1	05	1,837.29
262	1	06	1,836.67
263	1	07	1,836.04
264	1	08	1,835.41
265	1	09	1,834.79
266	1	0A	1,834.16
267	1	0B	1,833.53
268	1	0C	1,832.91
269	1	0D	1,832.28
270	1	0E	1,831.65
271	1	0F	1,831.02
272	1	10	1,830.40
273	1	11	1,829.77
274	1	12	1,829.14
275	1	13	1,828.51
276	1	14	1,827.89
277	1	15	1,827.26
278	1	16	1,826.63
279	1	17	1,826.00
280	1	18	1,825.38
281	1	19	1,824.75
282	1	1A	1,824.12
283	1	1B	1,823.49
284	1	1C	1,822.87
285	1	1D	1,822.24
286	1	1E	1,821.61
287	1	1F	1,820.98
288	1	20	1,820.36
289	1	21	1,819.73
290	1	22	1,819.10
291	1	23	1,818.47
292	1	24	1,817.84
293	1	25	1,817.21
294	1	26	1,816.59
295	1	27	1,815.96
296	1	28	1,815.33
297	1	29	1,814.70
298	1	2A	1,814.07
299	1	2B	1,813.45
300	1	2C	1,812.82
301	1	2D	1,812.19
302	1	2E	1,811.56
303	1	2F	1,810.93
304	1	30	1,810.30
305	1	31	1,809.67
306	1	32	1,809.05
307	1	33	1,808.42
308	1	34	1,807.79
309	1	35	1,807.16
310	1	36	1,806.53
311	1	37	1,805.90
312	1	38	1,805.27
313	1	39	1,804.64
314	1	3A	1,804.01
315	1	3B	1,803.38
316	1	3C	1,802.76
317	1	3D	1,802.13
318	1	3E	1,801.50
319	1	3F	1,800.87
320	1	40	1,800.24
321	1	41	1,799.61
322	1	42	1,798.98
323	1	43	1,798.35
324	1	44	1,797.72
325	1	45	1,797.09
326	1	46	1,796.46
327	1	47	1,795.83
328	1	48	1,795.20
329	1	49	1,794.57
330	1	4A	1,793.94
331	1	4B	1,793.31
332	1	4C	1,792.68
333	1	4D	1,792.05
334	1	4E	1,791.42
335	1	4F	1,790.79
336	1	50	1,790.16
337	1	51	1,789.53
338	1	52	1,788.90
339	1	53	1,788.27
340	1	54	1,787.64
341	1	55	1,787.01
342	1	56	1,786.38
343	1	57	1,785.75
344	1	58	1,785.12
345	1	59	1,784.49
346	1	5A	1,783.86
347	1	5B	1,783.22
348	1	5C	1,782.59
349	1	5D	1,781.96
350	1	5E	1,781.33
351	1	5F	1,780.70
352	1	60	1,780.07

Table 8-2. Frequency Coefficients for Tone Generator (continued)

BCD	HEX BR5	HEX BR4	FREQUENCY
353	1	61	1,779.44
354	1	62	1,778.81
355	1	63	1,778.18
356	1	64	1,777.55
357	1	65	1,776.91
358	1	66	1,776.28
359	1	67	1,775.65
360	1	68	1,775.02
361	1	69	1,774.39
362	1	6A	1,773.76
363	1	6B	1,773.12
364	1	6C	1,772.49
365	1	6D	1,771.86
366	1	6E	1,771.23
367	1	6F	1,770.60
368	1	70	1,769.97
369	1	71	1,769.33
370	1	72	1,768.70
371	1	73	1,768.07
372	1	74	1,767.44
373	1	75	1,766.80
374	1	76	1,766.17
375	1	77	1,765.54
376	1	78	1,764.91
377	1	79	1,764.28
378	1	7A	1,763.64
379	1	7B	1,763.01
380	1	7C	1,762.38
381	1	7D	1,761.74
382	1	7E	1,761.11
383	1	7F	1,760.48
384	1	80	1,759.85
385	1	81	1,759.21
386	1	82	1,758.58
387	1	83	1,757.95
388	1	84	1,757.31
389	1	85	1,756.68
390	1	86	1,756.05
391	1	87	1,755.41
392	1	88	1,754.78
393	1	89	1,754.15
394	1	8A	1,753.51
395	1	8B	1,752.88
396	1	8C	1,752.25
397	1	8D	1,751.61
398	1	8E	1,750.98
399	1	8F	1,750.35
400	1	90	1,749.71
401	1	91	1,749.08
402	1	92	1,748.44
403	1	93	1,747.81
404	1	94	1,747.18
405	1	95	1,746.54
406	1	96	1,745.91
407	1	97	1,745.27
408	1	98	1,744.64
409	1	99	1,744.00
410	1	9A	1,743.37
411	1	9B	1,742.73
412	1	9C	1,742.10
413	1	9D	1,741.47
414	1	9E	1,740.83
415	1	9F	1,740.20
416	1	A0	1,739.56
417	1	A1	1,738.93
418	1	A2	1,738.29
419	1	A3	1,737.66
420	1	A4	1,737.02
421	1	A5	1,736.39
422	1	A6	1,735.75
423	1	A7	1,735.11
424	1	A8	1,734.48
425	1	A9	1,733.84
426	1	AA	1,733.21
427	1	AB	1,732.57
428	1	AC	1,731.94
429	1	AD	1,731.30
430	1	AE	1,730.67
431	1	AF	1,730.03
432	1	B0	1,729.39
433	1	B1	1,728.76
434	1	B2	1,728.12
435	1	B3	1,727.49
436	1	B4	1,726.85
437	1	B5	1,726.21
438	1	B6	1,725.58
439	1	B7	1,724.94
440	1	B8	1,724.30
441	1	B9	1,723.67
442	1	BA	1,723.03
443	1	BB	1,722.39
444	1	BC	1,721.76
445	1	BD	1,721.12
446	1	BE	1,720.48
447	1	BF	1,719.85
448	1	C0	1,719.21
449	1	C1	1,718.57
450	1	C2	1,717.93
451	1	C3	1,717.30
452	1	C4	1,716.66
453	1	C5	1,716.02
454	1	C6	1,715.38
455	1	C7	1,714.75
456	1	C8	1,714.11
457	1	C9	1,713.47
458	1	CA	1,712.83
459	1	CB	1,712.20
460	1	CC	1,711.56
461	1	CD	1,710.92
462	1	CE	1,710.28
463	1	CF	1,709.64
464	1	D0	1,709.00
465	1	D1	1,708.37
466	1	D2	1,707.73
467	1	D3	1,707.09
468	1	D4	1,706.45
469	1	D5	1,705.81
470	1	D6	1,705.17
471	1	D7	1,704.54
472	1	D8	1,703.90
473	1	D9	1,703.26
474	1	DA	1,702.62
475	1	DB	1,701.98
476	1	DC	1,701.34
477	1	DD	1,700.70
478	1	DE	1,700.06
479	1	DF	1,699.42
480	1	E0	1,698.78
481	1	E1	1,698.14
482	1	E2	1,697.50
483	1	E3	1,696.86
484	1	E4	1,696.22
485	1	E5	1,695.58
486	1	E6	1,694.94
487	1	E7	1,694.30
488	1	E8	1,693.66
489	1	E9	1,693.02
490	1	EA	1,692.38
491	1	EB	1,691.74
492	1	EC	1,691.10
493	1	ED	1,690.46
494	1	EE	1,689.82
495	1	EF	1,689.18
496	1	F0	1,688.54
497	1	F1	1,687.90
498	1	F2	1,687.26
499	1	F3	1,686.62
500	1	F4	1,685.98
501	1	F5	1,685.34
502	1	F6	1,684.69

Table 8-2. Frequency Coefficients for Tone Generator (continued)

BCD	HEX BR5	HEX BR4	FREQUENCY
503	1	F7	1,684.05
504	1	F8	1,683.41
505	1	F9	1,682.77
506	1	FA	1,682.13
507	1	FB	1,681.49
508	1	FC	1,680.85
509	1	FD	1,680.20
510	1	FE	1,679.56
511	1	FF	1,678.92
512	2	00	1,678.28
513	2	01	1,677.64
514	2	02	1,676.99
515	2	03	1,676.35
516	2	04	1,675.71
517	2	05	1,675.07
518	2	06	1,674.42
519	2	07	1,673.78
520	2	08	1,673.14
521	2	09	1,672.50
522	2	0A	1,671.85
523	2	0B	1,671.21
524	2	0C	1,670.57
525	2	0D	1,669.92
526	2	0E	1,669.28
527	2	0F	1,668.64
528	2	10	1,667.99
529	2	11	1,667.35
530	2	12	1,666.71
531	2	13	1,666.06
532	2	14	1,665.42
533	2	15	1,664.77
534	2	16	1,664.13
535	2	17	1,663.49
536	2	18	1,662.84
537	2	19	1,662.20
538	2	1A	1,661.55
539	2	1B	1,660.91
540	2	1C	1,660.27
541	2	1D	1,659.62
542	2	1E	1,658.98
543	2	1F	1,658.33
544	2	20	1,657.69
545	2	21	1,657.04
546	2	22	1,656.40
547	2	23	1,655.75
548	2	24	1,655.11
549	2	25	1,654.46
550	2	26	1,653.82
551	2	27	1,653.17
552	2	28	1,652.52
553	2	29	1,651.88
554	2	2A	1,651.23
555	2	2B	1,650.59
556	2	2C	1,649.94
557	2	2D	1,649.30
558	2	2E	1,648.65
559	2	2F	1,648.00
560	2	30	1,647.36
561	2	31	1,646.71
562	2	32	1,646.06
563	2	33	1,645.42
564	2	34	1,644.77
565	2	35	1,644.12
566	2	36	1,643.48
567	2	37	1,642.83
568	2	38	1,642.18
569	2	39	1,641.54
570	2	3A	1,640.89
571	2	3B	1,640.24
572	2	3C	1,639.59
573	2	3D	1,638.95
574	2	3E	1,638.30
575	2	3F	1,637.65
576	2	40	1,637.00
577	2	41	1,636.36
578	2	42	1,635.71
579	2	43	1,635.06
580	2	44	1,634.41
581	2	45	1,633.76
582	2	46	1,633.12
583	2	47	1,632.47
584	2	48	1,631.82
585	2	49	1,631.17
586	2	4A	1,630.52
587	2	4B	1,629.87
588	2	4C	1,629.22
589	2	4D	1,628.57
590	2	4E	1,627.92
591	2	4F	1,627.28
592	2	50	1,626.63
593	2	51	1,625.98
594	2	52	1,625.33
595	2	53	1,624.68
596	2	54	1,624.03
597	2	55	1,623.38
598	2	56	1,622.73
599	2	57	1,622.08
600	2	58	1,621.43
601	2	59	1,620.78
602	2	5A	1,620.13
603	2	5B	1,619.48
604	2	5C	1,618.83
605	2	5D	1,618.17
606	2	5E	1,617.52
607	2	5F	1,616.87
608	2	60	1,616.22
609	2	61	1,615.57
610	2	62	1,614.92
611	2	63	1,614.27
612	2	64	1,613.62
613	2	65	1,612.97
614	2	66	1,612.31
615	2	67	1,611.66
616	2	68	1,611.01
617	2	69	1,610.36
618	2	6A	1,609.71
619	2	6B	1,609.05
620	2	6C	1,608.40
621	2	6D	1,607.75
622	2	6E	1,607.10
623	2	6F	1,606.44
624	2	70	1,605.79
625	2	71	1,605.14
626	2	72	1,604.49
627	2	73	1,603.83
628	2	74	1,603.18
629	2	75	1,602.53
630	2	76	1,601.87
631	2	77	1,601.22
632	2	78	1,600.57
633	2	79	1,599.91
634	2	7A	1,599.26
635	2	7B	1,598.61
636	2	7C	1,597.95
637	2	7D	1,597.30
638	2	7E	1,596.64
639	2	7F	1,595.99
640	2	80	1,595.33
641	2	81	1,594.68
642	2	82	1,594.03
643	2	83	1,593.37
644	2	84	1,592.72
645	2	85	1,592.06
646	2	86	1,591.41
647	2	87	1,590.75
648	2	88	1,590.09
649	2	89	1,589.44
650	2	8A	1,588.78
651	2	8B	1,588.13
652	2	8C	1,587.47

Table 8-2. Frequency Coefficients for Tone Generator (continued)

BCD	HEX BR5	HEX BR4	FREQUENCY
653	2	8D	1,586.82
654	2	8E	1,586.16
655	2	8F	1,585.50
656	2	90	1,584.85
657	2	91	1,584.19
658	2	92	1,583.54
659	2	93	1,582.88
660	2	94	1,582.22
661	2	95	1,581.57
662	2	96	1,580.91
663	2	97	1,580.25
664	2	98	1,579.59
665	2	99	1,578.94
666	2	9A	1,578.28
667	2	9B	1,577.62
668	2	9C	1,576.96
669	2	9D	1,576.31
670	2	9E	1,575.65
671	2	9F	1,574.99
672	2	A0	1,574.33
673	2	A1	1,573.67
674	2	A2	1,573.02
675	2	A3	1,572.36
676	2	A4	1,571.70
677	2	A5	1,571.04
678	2	A6	1,570.38
679	2	A7	1,569.72
680	2	A8	1,569.06
681	2	A9	1,568.41
682	2	AA	1,567.75
683	2	AB	1,567.09
684	2	AC	1,566.43
685	2	AD	1,565.77
686	2	AE	1,565.11
687	2	AF	1,564.45
688	2	B0	1,563.79
689	2	B1	1,563.13
690	2	B2	1,562.47
691	2	B3	1,561.81
692	2	B4	1,561.15
693	2	B5	1,560.49
694	2	B6	1,559.83
695	2	B7	1,559.16
696	2	B8	1,558.50
697	2	B9	1,557.84
698	2	BA	1,557.18
699	2	BB	1,556.52
700	2	BC	1,555.86
701	2	BD	1,555.20
702	2	BE	1,554.53
703	2	BF	1,553.87
704	2	C0	1,553.21
705	2	C1	1,552.55
706	2	C2	1,551.89
707	2	C3	1,551.22
708	2	C4	1,550.56
709	2	C5	1,549.90
710	2	C6	1,549.24
711	2	C7	1,548.57
712	2	C8	1,547.91
713	2	C9	1,547.25
714	2	CA	1,546.58
715	2	CB	1,545.92
716	2	CC	1,545.26
717	2	CD	1,544.59
718	2	CE	1,543.93
719	2	CF	1,543.27
720	2	D0	1,542.60
721	2	D1	1,541.94
722	2	D2	1,541.27
723	2	D3	1,540.61
724	2	D4	1,539.94
725	2	D5	1,539.28
726	2	D6	1,538.62
727	2	D7	1,537.95
728	2	D8	1,537.28
729	2	D9	1,536.62
730	2	DA	1,535.95
731	2	DB	1,535.29
732	2	DC	1,534.62
733	2	DD	1,533.96
734	2	DE	1,533.29
735	2	DF	1,532.63
736	2	E0	1,531.96
737	2	E1	1,531.29
738	2	E2	1,530.63
739	2	E3	1,529.96
740	2	E4	1,529.29
741	2	E5	1,528.63
742	2	E6	1,527.96
743	2	E7	1,527.29
744	2	E8	1,526.63
745	2	E9	1,525.96
746	2	EA	1,525.29
747	2	EB	1,524.62
748	2	EC	1,523.96
749	2	ED	1,523.29
750	2	EE	1,522.62
751	2	EF	1,521.95
752	2	F0	1,521.28
753	2	F1	1,520.61
754	2	F2	1,519.95
755	2	F3	1,519.28
756	2	F4	1,518.61
757	2	F5	1,517.94
758	2	F6	1,517.27
759	2	F7	1,516.60
760	2	F8	1,515.93
761	2	F9	1,515.26
762	2	FA	1,514.59
763	2	FB	1,513.92
764	2	FC	1,513.25
765	2	FD	1,512.58
766	2	FE	1,511.91
767	2	FF	1,511.24
768	3	00	1,510.57
769	3	01	1,509.90
770	3	02	1,509.23
771	3	03	1,508.56
772	3	04	1,507.89
773	3	05	1,507.22
774	3	06	1,506.54
775	3	07	1,505.87
776	3	08	1,505.20
777	3	09	1,504.53
778	3	0A	1,503.86
779	3	0B	1,503.19
780	3	0C	1,502.51
781	3	0D	1,501.84
782	3	0E	1,501.17
783	3	0F	1,500.50
784	3	10	1,499.82
785	3	11	1,499.15
786	3	12	1,498.48
787	3	13	1,497.80
788	3	14	1,497.13
789	3	15	1,496.46
790	3	16	1,495.78
791	3	17	1,495.11
792	3	18	1,494.43
793	3	19	1,493.76
794	3	1A	1,493.09
795	3	1B	1,492.41
796	3	1C	1,491.74
797	3	1D	1,491.06
798	3	1E	1,490.39
799	3	1F	1,489.71
800	3	20	1,489.04
801	3	21	1,488.36
802	3	22	1,487.68

Table 8-2. Frequency Coefficients for Tone Generator (continued)

BCD	HEX BR5	HEX BR4	FREQUENCY
803	3	23	1,487.01
804	3	24	1,486.33
805	3	25	1,485.66
806	3	26	1,484.98
807	3	27	1,484.30
808	3	28	1,483.63
809	3	29	1,482.95
810	3	2A	1,482.27
811	3	2B	1,481.60
812	3	2C	1,480.92
813	3	2D	1,480.24
814	3	2E	1,479.57
815	3	2F	1,478.89
816	3	30	1,478.21
817	3	31	1,477.53
818	3	32	1,476.85
819	3	33	1,476.18
820	3	34	1,475.50
821	3	35	1,474.82
822	3	36	1,474.14
823	3	37	1,473.46
824	3	38	1,472.78
825	3	39	1,472.10
826	3	3A	1,471.42
827	3	3B	1,470.74
828	3	3C	1,470.07
829	3	3D	1,469.39
830	3	3E	1,468.71
831	3	3F	1,468.03
832	3	40	1,467.34
833	3	41	1,466.66
834	3	42	1,465.98
835	3	43	1,465.30
836	3	44	1,464.62
837	3	45	1,463.94
838	3	46	1,463.26
839	3	47	1,462.58
840	3	48	1,461.90
841	3	49	1,461.21
842	3	4A	1,460.53
843	3	4B	1,459.85
844	3	4C	1,459.17
845	3	4D	1,458.49
846	3	4E	1,457.80
847	3	4F	1,457.12
848	3	50	1,456.44
849	3	51	1,455.75
850	3	52	1,455.07
851	3	53	1,454.39
852	3	54	1,453.70
853	3	55	1,453.02
854	3	56	1,452.34
855	3	57	1,451.65
856	3	58	1,450.97
857	3	59	1,450.28
858	3	5A	1,449.60
859	3	5B	1,448.91
860	3	5C	1,448.23
861	3	5D	1,447.54
862	3	5E	1,446.86
863	3	5F	1,446.17
864	3	60	1,445.49
865	3	61	1,444.80
866	3	62	1,444.12
867	3	63	1,443.43
868	3	64	1,442.74
869	3	65	1,442.06
870	3	66	1,441.37
871	3	67	1,440.68
872	3	68	1,440.00
873	3	69	1,439.31
874	3	6A	1,438.62
875	3	6B	1,437.94
876	3	6C	1,437.25
877	3	6D	1,436.56
878	3	6E	1,435.87
879	3	6F	1,435.18
880	3	70	1,434.49
881	3	71	1,433.81
882	3	72	1,433.12
883	3	73	1,432.43
884	3	74	1,431.74
885	3	75	1,431.05
886	3	76	1,430.36
887	3	77	1,429.67
888	3	78	1,428.98
889	3	79	1,428.29
890	3	7A	1,427.60
891	3	7B	1,426.91
892	3	7C	1,426.22
893	3	7D	1,425.53
894	3	7E	1,424.84
895	3	7F	1,424.15
896	3	80	1,423.46
897	3	81	1,422.76
898	3	82	1,422.07
899	3	83	1,421.38
900	3	84	1,420.69
901	3	85	1,420.00
902	3	86	1,419.30
903	3	87	1,418.61
904	3	88	1,417.92
905	3	89	1,417.23
906	3	8A	1,416.53
907	3	8B	1,415.84
908	3	8C	1,415.15
909	3	8D	1,414.45
910	3	8E	1,413.76
911	3	8F	1,413.06
912	3	90	1,412.37
913	3	91	1,411.68
914	3	92	1,410.98
915	3	93	1,410.29
916	3	94	1,409.59
917	3	95	1,408.90
918	3	96	1,408.20
919	3	97	1,407.51
920	3	98	1,406.81
921	3	99	1,406.11
922	3	9A	1,405.42
923	3	9B	1,404.72
924	3	9C	1,404.02
925	3	9D	1,403.33
926	3	9E	1,402.63
927	3	9F	1,401.93
928	3	A0	1,401.24
929	3	A1	1,400.54
930	3	A2	1,399.84
931	3	A3	1,399.14
932	3	A4	1,398.45
933	3	A5	1,397.75
934	3	A6	1,397.05
935	3	A7	1,396.35
936	3	A8	1,395.65
937	3	A9	1,394.95
938	3	AA	1,394.25
939	3	AB	1,393.55
940	3	AC	1,392.85
941	3	AD	1,392.15
942	3	AE	1,391.45
943	3	AF	1,390.75
944	3	B0	1,390.05
945	3	B1	1,389.35
946	3	B2	1,388.65
947	3	B3	1,387.95
948	3	B4	1,387.25
949	3	B5	1,386.55
950	3	B6	1,385.85
951	3	B7	1,385.14
952	3	B8	1,384.44

Table 8-2. Frequency Coefficients for Tone Generator (continued)

BCD	HEX BR5	HEX BR4	FREQUENCY
953	3	B9	1,383.74
954	3	BA	1,383.04
955	3	BB	1,382.33
956	3	BC	1,381.63
957	3	BD	1,380.93
958	3	BE	1,380.23
959	3	BF	1,379.52
960	3	C0	1,378.82
961	3	C1	1,378.11
962	3	C2	1,377.41
963	3	C3	1,376.71
964	3	C4	1,376.00
965	3	C5	1,375.30
966	3	C6	1,374.59
967	3	C7	1,373.89
968	3	C8	1,373.18
969	3	C9	1,372.48
970	3	CA	1,371.77
971	3	CB	1,371.06
972	3	CC	1,370.36
973	3	CD	1,369.65
974	3	CE	1,368.94
975	3	CF	1,368.24
976	3	D0	1,367.53
977	3	D1	1,366.82
978	3	D2	1,366.12
979	3	D3	1,365.41
980	3	D4	1,364.70
981	3	D5	1,363.99
982	3	D6	1,363.28
983	3	D7	1,362.57
984	3	D8	1,361.87
985	3	D9	1,361.16
986	3	DA	1,360.45
987	3	DB	1,359.74
988	3	DC	1,359.03
989	3	DD	1,358.32
990	3	DE	1,357.61
991	3	DF	1,356.90
992	3	E0	1,356.19
993	3	E1	1,355.48
994	3	E2	1,354.77
995	3	E3	1,354.06
996	3	E4	1,353.34
997	3	E5	1,352.63
998	3	E6	1,351.92
999	3	E7	1,351.21
1000	3	E8	1,350.50
1001	3	E9	1,349.78
1002	3	EA	1,349.07
1003	3	EB	1,348.36
1004	3	EC	1,347.64
1005	3	ED	1,346.93
1006	3	EE	1,346.22
1007	3	EF	1,345.50
1008	3	F0	1,344.79
1009	3	F1	1,344.08
1010	3	F2	1,343.36
1011	3	F3	1,342.65
1012	3	F4	1,341.93
1013	3	F5	1,341.22
1014	3	F6	1,340.50
1015	3	F7	1,339.78
1016	3	F8	1,339.07
1017	3	F9	1,338.35
1018	3	FA	1,337.64
1019	3	FB	1,336.92
1020	3	FC	1,336.20
1021	3	FD	1,335.49
1022	3	FE	1,334.77
1023	3	FF	1,334.05
1024	4	00	1,333.33
1025	4	01	1,332.62
1026	4	02	1,331.90
1027	4	03	1,331.18
1028	4	04	1,330.46
1029	4	05	1,329.74
1030	4	06	1,329.02
1031	4	07	1,328.30
1032	4	08	1,327.58
1033	4	09	1,326.86
1034	4	0A	1,326.14
1035	4	0B	1,325.42
1036	4	0C	1,324.70
1037	4	0D	1,323.98
1038	4	0E	1,323.26
1039	4	0F	1,322.54
1040	4	10	1,321.82
1041	4	11	1,321.10
1042	4	12	1,320.37
1043	4	13	1,319.65
1044	4	14	1,318.93
1045	4	15	1,318.21
1046	4	16	1,317.48
1047	4	17	1,316.76
1048	4	18	1,316.04
1049	4	19	1,315.31
1050	4	1A	1,314.59
1051	4	1B	1,313.86
1052	4	1C	1,313.14
1053	4	1D	1,312.41
1054	4	1E	1,311.69
1055	4	1F	1,310.96
1056	4	20	1,310.24
1057	4	21	1,309.51
1058	4	22	1,308.79
1059	4	23	1,308.06
1060	4	24	1,307.33
1061	4	25	1,306.61
1062	4	26	1,305.88
1063	4	27	1,305.15
1064	4	28	1,304.43
1065	4	29	1,303.70
1066	4	2A	1,302.97
1067	4	2B	1,302.24
1068	4	2C	1,301.51
1069	4	2D	1,300.79
1070	4	2E	1,300.06
1071	4	2F	1,299.33
1072	4	30	1,298.60
1073	4	31	1,297.87
1074	4	32	1,297.14
1075	4	33	1,296.41
1076	4	34	1,295.68
1077	4	35	1,294.95
1078	4	36	1,294.21
1079	4	37	1,293.48
1080	4	38	1,292.75
1081	4	39	1,292.02
1082	4	3A	1,291.29
1083	4	3B	1,290.56
1084	4	3C	1,289.82
1085	4	3D	1,289.09
1086	4	3E	1,288.36
1087	4	3F	1,287.62
1088	4	40	1,286.89
1089	4	41	1,286.16
1090	4	42	1,285.42
1091	4	43	1,284.69
1092	4	44	1,283.95
1093	4	45	1,283.22
1094	4	46	1,282.48
1095	4	47	1,281.75
1096	4	48	1,281.01
1097	4	49	1,280.27
1098	4	4A	1,279.54
1099	4	4B	1,278.80
1100	4	4C	1,278.06
1101	4	4D	1,277.33
1102	4	4E	1,276.59

Table 8-2. Frequency Coefficients for Tone Generator (continued)

BCD	HEX BR5	HEX BR4	FREQUENCY
1103	4	4F	1,275.85
1104	4	50	1,275.11
1105	4	51	1,274.38
1106	4	52	1,273.64
1107	4	53	1,272.90
1108	4	54	1,272.16
1109	4	55	1,271.42
1110	4	56	1,270.68
1111	4	57	1,269.94
1112	4	58	1,269.20
1113	4	59	1,268.46
1114	4	5A	1,267.72
1115	4	5B	1,266.98
1116	4	5C	1,266.24
1117	4	5D	1,265.50
1118	4	5E	1,264.75
1119	4	5F	1,264.01
1120	4	60	1,263.27
1121	4	61	1,262.53
1122	4	62	1,261.78
1123	4	63	1,261.04
1124	4	64	1,260.30
1125	4	65	1,259.55
1126	4	66	1,258.81
1127	4	67	1,258.06
1128	4	68	1,257.32
1129	4	69	1,256.57
1130	4	6A	1,255.83
1131	4	6B	1,255.08
1132	4	6C	1,254.34
1133	4	6D	1,253.59
1134	4	6E	1,252.85
1135	4	6F	1,252.10
1136	4	70	1,251.35
1137	4	71	1,250.60
1138	4	72	1,249.86
1139	4	73	1,249.11
1140	4	74	1,248.36
1141	4	75	1,247.61
1142	4	76	1,246.86
1143	4	77	1,246.11
1144	4	78	1,245.36
1145	4	79	1,244.61
1146	4	7A	1,243.86
1147	4	7B	1,243.11
1148	4	7C	1,242.36
1149	4	7D	1,241.61
1150	4	7E	1,240.86
1151	4	7F	1,240.11
1152	4	80	1,239.36
1153	4	81	1,238.61
1154	4	82	1,237.85
1155	4	83	1,237.10
1156	4	84	1,236.35
1157	4	85	1,235.60
1158	4	86	1,234.84
1159	4	87	1,234.09
1160	4	88	1,233.33
1161	4	89	1,232.58
1162	4	8A	1,231.82
1163	4	8B	1,231.07
1164	4	8C	1,230.31
1165	4	8D	1,229.56
1166	4	8E	1,228.80
1167	4	8F	1,228.05
1168	4	90	1,227.29
1169	4	91	1,226.53
1170	4	92	1,225.77
1171	4	93	1,225.02
1172	4	94	1,224.26
1173	4	95	1,223.50
1174	4	96	1,222.74
1175	4	97	1,221.98
1176	4	98	1,221.22
1177	4	99	1,220.46
1178	4	9A	1,219.70
1179	4	9B	1,218.94
1180	4	9C	1,218.18
1181	4	9D	1,217.42
1182	4	9E	1,216.66
1183	4	9F	1,215.90
1184	4	A0	1,215.14
1185	4	A1	1,214.38
1186	4	A2	1,213.61
1187	4	A3	1,212.85
1188	4	A4	1,212.09
1189	4	A5	1,211.32
1190	4	A6	1,210.56
1191	4	A7	1,209.80
1192	4	A8	1,209.03
1193	4	A9	1,208.27
1194	4	AA	1,207.50
1195	4	AB	1,206.74
1196	4	AC	1,205.97
1197	4	AD	1,205.21
1198	4	AE	1,204.44
1199	4	AF	1,203.67
1200	4	B0	1,202.91
1201	4	B1	1,202.14
1202	4	B2	1,201.37
1203	4	B3	1,200.60
1204	4	B4	1,199.83
1205	4	B5	1,199.07
1206	4	B6	1,198.30
1207	4	B7	1,197.53
1208	4	B8	1,196.76
1209	4	B9	1,195.99
1210	4	BA	1,195.22
1211	4	BB	1,194.45
1212	4	BC	1,193.68
1213	4	BD	1,192.90
1214	4	BE	1,192.13
1215	4	BF	1,191.36
1216	4	C0	1,190.59
1217	4	C1	1,189.81
1218	4	C2	1,189.04
1219	4	C3	1,188.27
1220	4	C4	1,187.49
1221	4	C5	1,186.72
1222	4	C6	1,185.95
1223	4	C7	1,185.17
1224	4	C8	1,184.40
1225	4	C9	1,183.62
1226	4	CA	1,182.84
1227	4	CB	1,182.07
1228	4	CC	1,181.29
1229	4	CD	1,180.51
1230	4	CE	1,179.74
1231	4	CF	1,178.96
1232	4	D0	1,178.18
1233	4	D1	1,177.40
1234	4	D2	1,176.62
1235	4	D3	1,175.84
1236	4	D4	1,175.06
1237	4	D5	1,174.28
1238	4	D6	1,173.50
1239	4	D7	1,172.72
1240	4	D8	1,171.94
1241	4	D9	1,171.16
1242	4	DA	1,170.38
1243	4	DB	1,169.60
1244	4	DC	1,168.82
1245	4	DD	1,168.03
1246	4	DE	1,167.25
1247	4	DF	1,166.47
1248	4	E0	1,165.68
1249	4	E1	1,164.90
1250	4	E2	1,164.11
1251	4	E3	1,163.33
1252	4	E4	1,162.54

Table 8-2. Frequency Coefficients for Tone Generator (continued)

BCD	HEX BR5	HEX BR4	FREQUENCY
1253	4	E5	1,161.76
1254	4	E6	1,160.97
1255	4	E7	1,160.18
1256	4	E8	1,159.40
1257	4	E9	1,158.61
1258	4	EA	1,157.82
1259	4	EB	1,157.03
1260	4	EC	1,156.25
1261	4	ED	1,155.46
1262	4	EE	1,154.67
1263	4	EF	1,153.88
1264	4	F0	1,153.09
1265	4	F1	1,152.30
1266	4	F2	1,151.51
1267	4	F3	1,150.72
1268	4	F4	1,149.92
1269	4	F5	1,149.13
1270	4	F6	1,148.34
1271	4	F7	1,147.55
1272	4	F8	1,146.75
1273	4	F9	1,145.96
1274	4	FA	1,145.17
1275	4	FB	1,144.37
1276	4	FC	1,143.58
1277	4	FD	1,142.78
1278	4	FE	1,141.99
1279	4	FF	1,141.19
1280	5	00	1,140.40
1281	5	01	1,139.60
1282	5	02	1,138.80
1283	5	03	1,138.00
1284	5	04	1,137.21
1285	5	05	1,136.41
1286	5	06	1,135.61
1287	5	07	1,134.81
1288	5	08	1,134.01
1289	5	09	1,133.21
1290	5	0A	1,132.41
1291	5	0B	1,131.61
1292	5	0C	1,130.81
1293	5	0D	1,130.01
1294	5	0E	1,129.21
1295	5	0F	1,128.40
1296	5	10	1,127.60
1297	5	11	1,126.80
1298	5	12	1,125.99
1299	5	13	1,125.19
1300	5	14	1,124.39
1301	5	15	1,123.58
1302	5	16	1,122.78
1303	5	17	1,121.97
1304	5	18	1,121.16
1305	5	19	1,120.36
1306	5	1A	1,119.55
1307	5	1B	1,118.74
1308	5	1C	1,117.94
1309	5	1D	1,117.13
1310	5	1E	1,116.32
1311	5	1F	1,115.51
1312	5	20	1,114.70
1313	5	21	1,113.89
1314	5	22	1,113.08
1315	5	23	1,112.27
1316	5	24	1,111.46
1317	5	25	1,110.65
1318	5	26	1,109.84
1319	5	27	1,109.02
1320	5	28	1,108.21
1321	5	29	1,107.40
1322	5	2A	1,106.58
1323	5	2B	1,105.77
1324	5	2C	1,104.95
1325	5	2D	1,104.14
1326	5	2E	1,103.32
1327	5	2F	1,102.51
1328	5	30	1,101.69
1329	5	31	1,100.87
1330	5	32	1,100.06
1331	5	33	1,099.24
1332	5	34	1,098.42
1333	5	35	1,097.60
1334	5	36	1,096.78
1335	5	37	1,095.96
1336	5	38	1,095.14
1337	5	39	1,094.32
1338	5	3A	1,093.50
1339	5	3B	1,092.68
1340	5	3C	1,091.86
1341	5	3D	1,091.04
1342	5	3E	1,090.21
1343	5	3F	1,089.39
1344	5	40	1,088.57
1345	5	41	1,087.74
1346	5	42	1,086.92
1347	5	43	1,086.09
1348	5	44	1,085.27
1349	5	45	1,084.44
1350	5	46	1,083.61
1351	5	47	1,082.79
1352	5	48	1,081.96
1353	5	49	1,081.13
1354	5	4A	1,080.30
1355	5	4B	1,079.48
1356	5	4C	1,078.65
1357	5	4D	1,077.82
1358	5	4E	1,076.99
1359	5	4F	1,076.15
1360	5	50	1,075.32
1361	5	51	1,074.49
1362	5	52	1,073.66
1363	5	53	1,072.83
1364	5	54	1,071.99
1365	5	55	1,071.16
1366	5	56	1,070.33
1367	5	57	1,069.49
1368	5	58	1,068.66
1369	5	59	1,067.82
1370	5	5A	1,066.98
1371	5	5B	1,066.15
1372	5	5C	1,065.31
1373	5	5D	1,064.47
1374	5	5E	1,063.63
1375	5	5F	1,062.80
1376	5	60	1,061.96
1377	5	61	1,061.12
1378	5	62	1,060.28
1379	5	63	1,059.44
1380	5	64	1,058.60
1381	5	65	1,057.75
1382	5	66	1,056.91
1383	5	67	1,056.07
1384	5	68	1,055.23
1385	5	69	1,054.38
1386	5	6A	1,053.54
1387	5	6B	1,052.69
1388	5	6C	1,051.85
1389	5	6D	1,051.00
1390	5	6E	1,050.16
1391	5	6F	1,049.31
1392	5	70	1,048.46
1393	5	71	1,047.61
1394	5	72	1,046.77
1395	5	73	1,045.92
1396	5	74	1,045.07
1397	5	75	1,044.22
1398	5	76	1,043.37
1399	5	77	1,042.52
1400	5	78	1,041.66
1401	5	79	1,040.81
1402	5	7A	1,039.96

Table 8-2. Frequency Coefficients for Tone Generator (continued)

BCD	HEX BR5	HEX BR4	FREQUENCY
1403	5	7B	1,039.11
1404	5	7C	1,038.25
1405	5	7D	1,037.40
1406	5	7E	1,036.54
1407	5	7F	1,035.69
1408	5	80	1,034.83
1409	5	81	1,033.98
1410	5	82	1,033.12
1411	5	83	1,032.26
1412	5	84	1,031.40
1413	5	85	1,030.55
1414	5	86	1,029.69
1415	5	87	1,028.83
1416	5	88	1,027.97
1417	5	89	1,027.11
1418	5	8A	1,026.24
1419	5	8B	1,025.38
1420	5	8C	1,024.52
1421	5	8D	1,023.66
1422	5	8E	1,022.79
1423	5	8F	1,021.93
1424	5	90	1,021.06
1425	5	91	1,020.20
1426	5	92	1,019.33
1427	5	93	1,018.47
1428	5	94	1,017.60
1429	5	95	1,016.73
1430	5	96	1,015.86
1431	5	97	1,014.99
1432	5	98	1,014.13
1433	5	99	1,013.26
1434	5	9A	1,012.38
1435	5	9B	1,011.51
1436	5	9C	1,010.64
1437	5	9D	1,009.77
1438	5	9E	1,008.90
1439	5	9F	1,008.02
1440	5	A0	1,007.15
1441	5	A1	1,006.28
1442	5	A2	1,005.40
1443	5	A3	1,004.52
1444	5	A4	1,003.65
1445	5	A5	1,002.77
1446	5	A6	1,001.89
1447	5	A7	1,001.01
1448	5	A8	1,000.14
1449	5	A9	999.26
1450	5	AA	998.38
1451	5	AB	997.50
1452	5	AC	996.61
1453	5	AD	995.73
1454	5	AE	994.85
1455	5	AF	993.97
1456	5	B0	993.08
1457	5	B1	992.20
1458	5	B2	991.31
1459	5	B3	990.43
1460	5	B4	989.54
1461	5	B5	988.66
1462	5	B6	987.77
1463	5	B7	986.88
1464	5	B8	985.99
1465	5	B9	985.10
1466	5	BA	984.21
1467	5	BB	983.32
1468	5	BC	982.43
1469	5	BD	981.54
1470	5	BE	980.65
1471	5	BF	979.75
1472	5	C0	978.86
1473	5	C1	977.96
1474	5	C2	977.07
1475	5	C3	976.17
1476	5	C4	975.28
1477	5	C5	974.38
1478	5	C6	973.48
1479	5	C7	972.58
1480	5	C8	971.68
1481	5	C9	970.78
1482	5	CA	969.88
1483	5	CB	968.98
1484	5	CC	968.08
1485	5	CD	967.18
1486	5	CE	966.28
1487	5	CF	965.37
1488	5	D0	964.47
1489	5	D1	963.56
1490	5	D2	962.66
1491	5	D3	961.75
1492	5	D4	960.84
1493	5	D5	959.93
1494	5	D6	959.03
1495	5	D7	958.12
1496	5	D8	957.21
1497	5	D9	956.30
1498	5	DA	955.38
1499	5	DB	954.47
1500	5	DC	953.56
1501	5	DD	952.65
1502	5	DE	951.73
1503	5	DF	950.82
1504	5	E0	949.90
1505	5	E1	948.99
1506	5	E2	948.07
1507	5	E3	947.15
1508	5	E4	946.23
1509	5	E5	945.31
1510	5	E6	944.39
1511	5	E7	943.47
1512	5	E8	942.55
1513	5	E9	941.63
1514	5	EA	940.71
1515	5	EB	939.78
1516	5	EC	938.86
1517	5	ED	937.93
1518	5	EE	937.01
1519	5	EF	936.08
1520	5	F0	935.15
1521	5	F1	934.23
1522	5	F2	933.30
1523	5	F3	932.37
1524	5	F4	931.44
1525	5	F5	930.51
1526	5	F6	929.57
1527	5	F7	928.64
1528	5	F8	927.71
1529	5	F9	926.77
1530	5	FA	925.84
1531	5	FB	924.90
1532	5	FC	923.97
1533	5	FD	923.03
1534	5	FE	922.09
1535	5	FF	921.15
1536	6	00	920.21
1537	6	01	919.27
1538	6	02	918.33
1539	6	03	917.39
1540	6	04	916.45
1541	6	05	915.50
1542	6	06	914.56
1543	6	07	913.61
1544	6	08	912.67
1545	6	09	911.72
1546	6	0A	910.77
1547	6	0B	909.83
1548	6	0C	908.88
1549	6	0D	907.93
1550	6	0E	906.98
1551	6	0F	906.03
1552	6	10	905.07

Table 8-2. Frequency Coefficients for Tone Generator (continued)

BCD	HEX BR5	HEX BR4	FREQUENCY
1553	6	11	904.12
1554	6	12	903.17
1555	6	13	902.21
1556	6	14	901.25
1557	6	15	900.30
1558	6	16	899.34
1559	6	17	898.38
1560	6	18	897.42
1561	6	19	896.46
1562	6	1A	895.50
1563	6	1B	894.54
1564	6	1C	893.58
1565	6	1D	892.61
1566	6	1E	891.65
1567	6	1F	890.69
1568	6	20	889.72
1569	6	21	888.75
1570	6	22	887.78
1571	6	23	886.82
1572	6	24	885.85
1573	6	25	884.88
1574	6	26	883.90
1575	6	27	882.93
1576	6	28	881.96
1577	6	29	880.99
1578	6	2A	880.01
1579	6	2B	879.04
1580	6	2C	878.06
1581	6	2D	877.08
1582	6	2E	876.10
1583	6	2F	875.12
1584	6	30	874.14
1585	6	31	873.16
1586	6	32	872.18
1587	6	33	871.20
1588	6	34	870.21
1589	6	35	869.23
1590	6	36	868.24
1591	6	37	867.25
1592	6	38	866.27
1593	6	39	865.28
1594	6	3A	864.29
1595	6	3B	863.30
1596	6	3C	862.31
1597	6	3D	861.31
1598	6	3E	860.32
1599	6	3F	859.33
1600	6	40	858.33
1601	6	41	857.33
1602	6	42	856.34
1603	6	43	855.34
1604	6	44	854.34
1605	6	45	853.34
1606	6	46	852.34
1607	6	47	851.33
1608	6	48	850.33
1609	6	49	849.33
1610	6	4A	848.32
1611	6	4B	847.31
1612	6	4C	846.31
1613	6	4D	845.30
1614	6	4E	844.29
1615	6	4F	843.28
1616	6	50	842.27
1617	6	51	841.25
1618	6	52	840.24
1619	6	53	839.23
1620	6	54	838.21
1621	6	55	837.19
1622	6	56	836.18
1623	6	57	835.16
1624	6	58	834.14
1625	6	59	833.12
1626	6	5A	832.09
1627	6	5B	831.07
1628	6	5C	830.05
1629	6	5D	829.02
1630	6	5E	828.00
1631	6	5F	826.97
1632	6	60	825.94
1633	6	61	824.91
1634	6	62	823.88
1635	6	63	822.85
1636	6	64	821.81
1637	6	65	820.78
1638	6	66	819.75
1639	6	67	818.71
1640	6	68	817.67
1641	6	69	816.63
1642	6	6A	815.59
1643	6	6B	814.55
1644	6	6C	813.51
1645	6	6D	812.47
1646	6	6E	811.42
1647	6	6F	810.38
1648	6	70	809.33
1649	6	71	808.28
1650	6	72	807.23
1651	6	73	806.18
1652	6	74	805.13
1653	6	75	804.08
1654	6	76	803.03
1655	6	77	801.97
1656	6	78	800.92
1657	6	79	799.86
1658	6	7A	798.80
1659	6	7B	797.74
1660	6	7C	796.68
1661	6	7D	795.62
1662	6	7E	794.55
1663	6	7F	793.49
1664	6	80	792.42
1665	6	81	791.36
1666	6	82	790.29
1667	6	83	789.22
1668	6	84	788.15
1669	6	85	787.08
1670	6	86	786.00
1671	6	87	784.93
1672	6	88	783.85
1673	6	89	782.78
1674	6	8A	781.70
1675	6	8B	780.62
1676	6	8C	779.54
1677	6	8D	778.45
1678	6	8E	777.37
1679	6	8F	776.28
1680	6	90	775.20
1681	6	91	774.11
1682	6	92	773.02
1683	6	93	771.93
1684	6	94	770.84
1685	6	95	769.75
1686	6	96	768.65
1687	6	97	767.56
1688	6	98	766.46
1689	6	99	765.36
1690	6	9A	764.26
1691	6	9B	763.16
1692	6	9C	762.06
1693	6	9D	760.95
1694	6	9E	759.85
1695	6	9F	758.74
1696	6	A0	757.63
1697	6	A1	756.52
1698	6	A2	755.41
1699	6	A3	754.30
1700	6	A4	753.18
1701	6	A5	752.07
1702	6	A6	750.95

Table 8-2. Frequency Coefficients for Tone Generator (continued)

BCD	HEX BR5	HEX BR4	FREQUENCY
1703	6	A7	749.83
1704	6	A8	748.71
1705	6	A9	747.59
1706	6	AA	746.47
1707	6	AB	745.34
1708	6	AC	744.22
1709	6	AD	743.09
1710	6	AE	741.96
1711	6	AF	740.83
1712	6	B0	739.70
1713	6	B1	738.56
1714	6	B2	737.43
1715	6	B3	736.29
1716	6	B4	735.15
1717	6	B5	734.01
1718	6	B6	732.87
1719	6	B7	731.73
1720	6	B8	730.59
1721	6	B9	729.44
1722	6	BA	728.29
1723	6	BB	727.14
1724	6	BC	725.99
1725	6	BD	724.84
1726	6	BE	723.69
1727	6	BF	722.53
1728	6	C0	721.37
1729	6	C1	720.21
1730	6	C2	719.05
1731	6	C3	717.89
1732	6	C4	716.73
1733	6	C5	715.56
1734	6	C6	714.39
1735	6	C7	713.22
1736	6	C8	712.05
1737	6	C9	710.88
1738	6	CA	709.70
1739	6	CB	708.53
1740	6	CC	707.35
1741	6	CD	706.17
1742	6	CE	704.99
1743	6	CF	703.81
1744	6	D0	702.62
1745	6	D1	701.43
1746	6	D2	700.25
1747	6	D3	699.06
1748	6	D4	697.86
1749	6	D5	696.67
1750	6	D6	695.47
1751	6	D7	694.28
1752	6	D8	693.08
1753	6	D9	691.88
1754	6	DA	690.67
1755	6	DB	689.47
1756	6	DC	688.26
1757	6	DD	687.05
1758	6	DE	685.84
1759	6	DF	684.63
1760	6	E0	683.41
1761	6	E1	682.19
1762	6	E2	680.98
1763	6	E3	679.76
1764	6	E4	678.53
1765	6	E5	677.31
1766	6	E6	676.08
1767	6	E7	674.85
1768	6	E8	673.62
1769	6	E9	672.39
1770	6	EA	671.15
1771	6	EB	669.92
1772	6	EC	668.68
1773	6	ED	667.44
1774	6	EE	666.19
1775	6	EF	664.95
1776	6	F0	663.70
1777	6	F1	662.45
1778	6	F2	661.20
1779	6	F3	659.95
1780	6	F4	658.69
1781	6	F5	657.43
1782	6	F6	656.17
1783	6	F7	654.91
1784	6	F8	653.64
1785	6	F9	652.38
1786	6	FA	651.11
1787	6	FB	649.84
1788	6	FC	648.56
1789	6	FD	647.29
1790	6	FE	646.01
1791	6	FF	644.73
1792	7	00	643.44
1793	7	01	642.16
1794	7	02	640.87
1795	7	03	639.58
1796	7	04	638.29
1797	7	05	636.99
1798	7	06	635.70
1799	7	07	634.40
1800	7	08	633.10
1801	7	09	631.79
1802	7	0A	630.48
1803	7	0B	629.17
1804	7	0C	627.86
1805	7	0D	626.55
1806	7	0E	625.23
1807	7	0F	623.91
1808	7	10	622.59
1809	7	11	621.26
1810	7	12	619.94
1811	7	13	618.61
1812	7	14	617.27
1813	7	15	615.94
1814	7	16	614.60
1815	7	17	613.26
1816	7	18	611.92
1817	7	19	610.57
1818	7	1A	609.22
1819	7	1B	607.87
1820	7	1C	606.51
1821	7	1D	605.16
1822	7	1E	603.80
1823	7	1F	602.43
1824	7	20	601.07
1825	7	21	599.70
1826	7	22	598.33
1827	7	23	596.95
1828	7	24	595.58
1829	7	25	594.20
1830	7	26	592.81
1831	7	27	591.43
1832	7	28	590.04
1833	7	29	588.65
1834	7	2A	587.25
1835	7	2B	585.85
1836	7	2C	584.45
1837	7	2D	583.05
1838	7	2E	581.64
1839	7	2F	580.23
1840	7	30	578.81
1841	7	31	577.40
1842	7	32	575.97
1843	7	33	574.55
1844	7	34	573.12
1845	7	35	571.69
1846	7	36	570.26
1847	7	37	568.82
1848	7	38	567.38
1849	7	39	565.94
1850	7	3A	564.49
1851	7	3B	563.04
1852	7	3C	561.58

Table 8-2. Frequency Coefficients for Tone Generator (continued)

BCD	HEX BR5	HEX BR4	FREQUENCY
1853	7	3D	560.13
1854	7	3E	558.66
1855	7	3F	557.20
1856	7	40	555.73
1857	7	41	554.26
1858	7	42	552.78
1859	7	43	551.30
1860	7	44	549.82
1861	7	45	548.33
1862	7	46	546.84
1863	7	47	545.34
1864	7	48	543.85
1865	7	49	542.34
1866	7	4A	540.84
1867	7	4B	539.33
1868	7	4C	537.81
1869	7	4D	536.29
1870	7	4E	534.77
1871	7	4F	533.24
1872	7	50	531.71
1873	7	51	530.18
1874	7	52	528.64
1875	7	53	527.09
1876	7	54	525.55
1877	7	55	524.00
1878	7	56	522.44
1879	7	57	520.88
1880	7	58	519.31
1881	7	59	517.74
1882	7	5A	516.17
1883	7	5B	514.59
1884	7	5C	513.01
1885	7	5D	511.42
1886	7	5E	509.83
1887	7	5F	508.23
1888	7	60	506.63
1889	7	61	505.02
1890	7	62	503.41
1891	7	63	501.79
1892	7	64	500.17
1893	7	65	498.54
1894	7	66	496.91
1895	7	67	495.28
1896	7	68	493.63
1897	7	69	491.99
1898	7	6A	490.33
1899	7	6B	488.68
1900	7	6C	487.01
1901	7	6D	485.35
1902	7	6E	483.67
1903	7	6F	481.99
1904	7	70	480.31
1905	7	71	478.62
1906	7	72	476.92
1907	7	73	475.22
1908	7	74	473.51
1909	7	75	471.80
1910	7	76	470.08
1911	7	77	468.35
1912	7	78	466.62
1913	7	79	464.88
1914	7	7A	463.14
1915	7	7B	461.39
1916	7	7C	459.63
1917	7	7D	457.87
1918	7	7E	456.10
1919	7	7F	454.32
1920	7	80	452.54
1921	7	81	450.75
1922	7	82	448.95
1923	7	83	447.15
1924	7	84	445.34
1925	7	85	443.52
1926	7	86	441.69
1927	7	87	439.86
1928	7	88	438.02
1929	7	89	436.17
1930	7	8A	434.32
1931	7	8B	432.46
1932	7	8C	430.59
1933	7	8D	428.71
1934	7	8E	426.82
1935	7	8F	424.93
1936	7	90	423.03
1937	7	91	421.12
1938	7	92	419.20
1939	7	93	417.27
1940	7	94	415.34
1941	7	95	413.39
1942	7	96	411.44
1943	7	97	409.48
1944	7	98	407.50
1945	7	99	405.52
1946	7	9A	403.53
1947	7	9B	401.53
1948	7	9C	399.52
1949	7	9D	397.51
1950	7	9E	395.48
1951	7	9F	393.44
1952	7	A0	391.39
1953	7	A1	389.33
1954	7	A2	387.26
1955	7	A3	385.18
1956	7	A4	383.08
1957	7	A5	380.98
1958	7	A6	378.87
1959	7	A7	376.74
1960	7	A8	374.60
1961	7	A9	372.45
1962	7	AA	370.29
1963	7	AB	368.11
1964	7	AC	365.93
1965	7	AD	363.73
1966	7	AE	361.52
1967	7	AF	359.29
1968	7	B0	357.05
1969	7	B1	354.80
1970	7	B2	352.53
1971	7	B3	350.25
1972	7	B4	347.95
1973	7	B5	345.64
1974	7	B6	343.31
1975	7	B7	340.97
1976	7	B8	338.62
1977	7	B9	336.24
1978	7	BA	333.85
1979	7	BB	331.45
1980	7	BC	329.02
1981	7	BD	326.58
1982	7	BE	324.12
1983	7	BF	321.64
1984	7	C0	319.14
1985	7	C1	316.63
1986	7	C2	314.09
1987	7	C3	311.54
1988	7	C4	308.96
1989	7	C5	306.36
1990	7	C6	303.74
1991	7	C7	301.10
1992	7	C8	298.43
1993	7	C9	295.75
1994	7	CA	293.03
1995	7	CB	290.29
1996	7	CC	287.53
1997	7	CD	284.74
1998	7	CE	281.92
1999	7	CF	279.08
2000	7	D0	276.21
2001	7	D1	273.30
2002	7	D2	270.37

Table 8-2. Frequency Coefficients for Tone Generator (continued)

BCD	HEX BR5	HEX BR4	FREQUENCY
2003	7	D3	267.40
2004	7	D4	264.40
2005	7	D5	261.37
2006	7	D6	258.30
2007	7	D7	255.20
2008	7	D8	252.06
2009	7	D9	248.88
2010	7	DA	245.66
2011	7	DB	242.39
2012	7	DC	239.08
2013	7	DD	235.73
2014	7	DE	232.33
2015	7	DF	228.88
2016	7	E0	225.37
2017	7	E1	221.81
2018	7	E2	218.20

BCD	HEX BR5	HEX BR4	FREQUENCY
2019	7	E3	214.52
2020	7	E4	210.78
2021	7	E5	206.98
2022	7	E6	203.10
2023	7	E7	199.15
2024	7	E8	195.12
2025	7	E9	191.00
2026	7	EA	186.79
2027	7	EB	182.49
2028	7	EC	178.09
2029	7	ED	173.57
2030	7	EE	168.93
2031	7	EF	164.17
2032	7	F0	159.26
2033	7	F1	154.20

BCD	HEX BR5	HEX BR4	FREQUENCY
2034	7	F2	148.96
2035	7	F3	143.54
2036	7	F4	137.90
2037	7	F5	132.02
2038	7	F6	125.87
2039	7	F7	119.41
2040	7	F8	112.58
2041	7	F9	105.30
2042	7	FA	97.49
2043	7	FB	88.99
2044	7	FC	79.59
2045	7	FD	68.92
2046	7	FE	56.27
2047	7	FF	39.79
2048	8	00	0.00

Table 8-3. Attenuation Coefficients for Tone Generator

BCD	HEX BR5	HEX BR4	VOLTS RMS	dBm (600Ω)
2047	7	FF	1.1204	3.21
2046	7	FE	1.1198	3.20
2045	7	FD	1.1193	3.20
2044	7	FC	1.1187	3.19
2043	7	FB	1.1182	3.19
2042	7	FA	1.1176	3.18
2041	7	F9	1.1171	3.18
2040	7	F8	1.1165	3.18
2039	7	F7	1.1160	3.17
2038	7	F6	1.1154	3.17
2037	7	F5	1.1149	3.16
2036	7	F4	1.1143	3.16
2035	7	F3	1.1138	3.15
2034	7	F2	1.1132	3.15
2033	7	F1	1.1127	3.15
2032	7	F0	1.1121	3.14
2031	7	EF	1.1116	3.14
2030	7	EE	1.1110	3.13
2029	7	ED	1.1105	3.13
2028	7	EC	1.1100	3.12
2027	7	EB	1.1094	3.12
2026	7	EA	1.1089	3.12
2025	7	E9	1.1083	3.11
2024	7	E8	1.1078	3.11
2023	7	E7	1.1072	3.10
2022	7	E6	1.1067	3.10
2021	7	E5	1.1061	3.09
2020	7	E4	1.1056	3.09
2019	7	E3	1.1050	3.09
2018	7	E2	1.1045	3.08
2017	7	E1	1.1039	3.08
2016	7	E0	1.1034	3.07
2015	7	DF	1.1028	3.07
2014	7	DE	1.1023	3.06
2013	7	DD	1.1017	3.06
2012	7	DC	1.1012	3.06
2011	7	DB	1.1006	3.05
2010	7	DA	1.1001	3.05
2009	7	D9	1.0996	3.04
2008	7	D8	1.0990	3.04
2007	7	D7	1.0985	3.03
2006	7	D6	1.0979	3.03
2005	7	D5	1.0974	3.03
2004	7	D4	1.0968	3.02
2003	7	D3	1.0963	3.02
2002	7	D2	1.0957	3.01

BCD	HEX BR5	HEX BR4	VOLTS RMS	dBm (600Ω)
2001	7	D1	1.0952	3.01
2000	7	D0	1.0946	3.00
1999	7	CF	1.0941	3.00
1998	7	CE	1.0935	3.00
1997	7	CD	1.0930	2.99
1996	7	CC	1.0924	2.99
1995	7	CB	1.0919	2.98
1994	7	CA	1.0913	2.98
1993	7	C9	1.0908	2.97
1992	7	C8	1.0903	2.97
1991	7	C7	1.0897	2.96
1990	7	C6	1.0892	2.96
1989	7	C5	1.0886	2.96
1988	7	C4	1.0881	2.95
1987	7	C3	1.0875	2.95
1986	7	C2	1.0870	2.94
1985	7	C1	1.0864	2.94
1984	7	C0	1.0859	2.93
1983	7	BF	1.0853	2.93
1982	7	BE	1.0848	2.93
1981	7	BD	1.0842	2.92
1980	7	BC	1.0837	2.92
1979	7	BB	1.0831	2.91
1978	7	BA	1.0826	2.91
1977	7	B9	1.0820	2.90
1976	7	B8	1.0815	2.90
1975	7	B7	1.0809	2.89
1974	7	B6	1.0804	2.89
1973	7	B5	1.0799	2.89
1972	7	B4	1.0793	2.88
1971	7	B3	1.0788	2.88
1970	7	B2	1.0782	2.87
1969	7	B1	1.0777	2.87
1968	7	B0	1.0771	2.86
1967	7	AF	1.0766	2.86
1966	7	AE	1.0760	2.85
1965	7	AD	1.0755	2.85
1964	7	AC	1.0749	2.85
1963	7	AB	1.0744	2.84
1962	7	AA	1.0738	2.84
1961	7	A9	1.0733	2.83
1960	7	A8	1.0727	2.83
1959	7	A7	1.0722	2.82
1958	7	A6	1.0716	2.82
1957	7	A5	1.0711	2.82
1956	7	A4	1.0705	2.81

BCD	HEX BR5	HEX BR4	VOLTS RMS	dBm (600Ω)
1955	7	A3	1.0700	2.81
1954	7	A2	1.0695	2.80
1953	7	A1	1.0689	2.80
1952	7	A0	1.0684	2.79
1951	7	9F	1.0678	2.79
1950	7	9E	1.0673	2.78
1949	7	9D	1.0667	2.78
1948	7	9C	1.0662	2.78
1947	7	9B	1.0656	2.77
1946	7	9A	1.0651	2.77
1945	7	99	1.0645	2.76
1944	7	98	1.0640	2.76
1943	7	97	1.0634	2.75
1942	7	96	1.0629	2.75
1941	7	95	1.0623	2.74
1940	7	94	1.0618	2.74
1939	7	93	1.0612	2.73
1938	7	92	1.0607	2.73
1937	7	91	1.0601	2.73
1936	7	90	1.0596	2.72
1935	7	8F	1.0591	2.72
1934	7	8E	1.0585	2.71
1933	7	8D	1.0580	2.71
1932	7	8C	1.0574	2.70
1931	7	8B	1.0569	2.70
1930	7	8A	1.0563	2.69
1929	7	89	1.0558	2.69
1928	7	88	1.0552	2.69
1927	7	87	1.0547	2.68
1926	7	86	1.0541	2.68
1925	7	85	1.0536	2.67
1924	7	84	1.0530	2.67
1923	7	83	1.0525	2.66
1922	7	82	1.0519	2.66
1921	7	81	1.0514	2.65
1920	7	80	1.0508	2.65
1919	7	7F	1.0503	2.64
1918	7	7E	1.0497	2.64
1917	7	7D	1.0492	2.64
1916	7	7C	1.0487	2.63
1915	7	7B	1.0481	2.63
1914	7	7A	1.0476	2.62
1913	7	79	1.0470	2.62
1912	7	78	1.0465	2.61
1911	7	77	1.0459	2.61
1910	7	76	1.0454	2.60

Table 8-3. Attenuation Coefficients for Tone Generator (continued)

BCD	HEX BR5	HEX BR4	VOLTS RMS	dBm (600Ω)
1909	7	75	1.0448	2.60
1908	7	74	1.0443	2.59
1907	7	73	1.0437	2.59
1906	7	72	1.0432	2.59
1905	7	71	1.0426	2.58
1904	7	70	1.0421	2.58
1903	7	6F	1.0415	2.57
1902	7	6E	1.0410	2.57
1901	7	6D	1.0404	2.56
1900	7	6C	1.0399	2.56
1899	7	6B	1.0394	2.55
1898	7	6A	1.0388	2.55
1897	7	69	1.0383	2.54
1896	7	68	1.0377	2.54
1895	7	67	1.0372	2.54
1894	7	66	1.0366	2.53
1893	7	65	1.0361	2.53
1892	7	64	1.0355	2.52
1891	7	63	1.0350	2.52
1890	7	62	1.0344	2.51
1889	7	61	1.0339	2.51
1888	7	60	1.0333	2.50
1887	7	5F	1.0328	2.50
1886	7	5E	1.0322	2.49
1885	7	5D	1.0317	2.49
1884	7	5C	1.0311	2.48
1883	7	5B	1.0306	2.48
1882	7	5A	1.0300	2.48
1881	7	59	1.0295	2.47
1880	7	58	1.0290	2.47
1879	7	57	1.0284	2.46
1878	7	56	1.0279	2.46
1877	7	55	1.0273	2.45
1876	7	54	1.0268	2.45
1875	7	53	1.0262	2.44
1874	7	52	1.0257	2.44
1873	7	51	1.0251	2.43
1872	7	50	1.0246	2.43
1871	7	4F	1.0240	2.42
1870	7	4E	1.0235	2.42
1869	7	4D	1.0229	2.42
1868	7	4C	1.0224	2.41
1867	7	4B	1.0218	2.41
1866	7	4A	1.0213	2.40
1865	7	49	1.0207	2.40
1864	7	48	1.0202	2.39
1863	7	47	1.0196	2.39
1862	7	46	1.0191	2.38
1861	7	45	1.0186	2.38
1860	7	44	1.0180	2.37
1859	7	43	1.0175	2.37
1858	7	42	1.0169	2.36
1857	7	41	1.0164	2.36
1856	7	40	1.0158	2.35
1855	7	3F	1.0153	2.35
1854	7	3E	1.0147	2.35
1853	7	3D	1.0142	2.34
1852	7	3C	1.0136	2.34
1851	7	3B	1.0131	2.33
1850	7	3A	1.0125	2.33
1849	7	39	1.0120	2.32
1848	7	38	1.0114	2.32
1847	7	37	1.0109	2.31
1846	7	36	1.0103	2.31
1845	7	35	1.0098	2.30
1844	7	34	1.0092	2.30
1843	7	33	1.0087	2.29
1842	7	32	1.0082	2.29
1841	7	31	1.0076	2.28
1840	7	30	1.0071	2.28
1839	7	2F	1.0065	2.27
1838	7	2E	1.0060	2.27
1837	7	2D	1.0054	2.27
1836	7	2C	1.0049	2.26
1835	7	2B	1.0043	2.26
1834	7	2A	1.0038	2.25
1833	7	29	1.0032	2.25
1832	7	28	1.0027	2.24
1831	7	27	1.0021	2.24
1830	7	26	1.0016	2.23
1829	7	25	1.0010	2.23
1828	7	24	1.0005	2.22
1827	7	23	0.9999	2.22
1826	7	22	0.9994	2.21
1825	7	21	0.9988	2.21
1824	7	20	0.9983	2.20
1823	7	1F	0.9978	2.20
1822	7	1E	0.9972	2.19
1821	7	1D	0.9967	2.19
1820	7	1C	0.9961	2.18
1819	7	1B	0.9956	2.18
1818	7	1A	0.9950	2.18
1817	7	19	0.9945	2.17
1816	7	18	0.9939	2.17
1815	7	17	0.9934	2.16
1814	7	16	0.9928	2.16
1813	7	15	0.9923	2.15
1812	7	14	0.9917	2.15
1811	7	13	0.9912	2.14
1810	7	12	0.9906	2.14
1809	7	11	0.9901	2.13
1808	7	10	0.9895	2.13
1807	7	0F	0.9890	2.12
1806	7	0E	0.9884	2.12
1805	7	0D	0.9879	2.11
1804	7	0C	0.9874	2.11
1803	7	0B	0.9868	2.10
1802	7	0A	0.9863	2.10
1801	7	09	0.9857	2.09
1800	7	08	0.9852	2.09
1799	7	07	0.9846	2.08
1798	7	06	0.9841	2.08
1797	7	05	0.9835	2.07
1796	7	04	0.9830	2.07
1795	7	03	0.9824	2.06
1794	7	02	0.9819	2.06
1793	7	01	0.9813	2.05
1792	7	00	0.9808	2.05
1791	6	FF	0.9802	2.05
1790	6	FE	0.9797	2.04
1789	6	FD	0.9791	2.04
1788	6	FC	0.9786	2.03
1787	6	FB	0.9781	2.03
1786	6	FA	0.9775	2.02
1785	6	F9	0.9770	2.02
1784	6	F8	0.9764	2.01
1783	6	F7	0.9759	2.01
1782	6	F6	0.9753	2.00
1781	6	F5	0.9748	2.00
1780	6	F4	0.9742	1.99
1779	6	F3	0.9737	1.99
1778	6	F2	0.9731	1.98
1777	6	F1	0.9726	1.98
1776	6	F0	0.9720	1.97
1775	6	EF	0.9715	1.97
1774	6	EE	0.9709	1.96
1773	6	ED	0.9704	1.96
1772	6	EC	0.9698	1.95

Table 8-3. Attenuation Coefficients for Tone Generator (continued)

BCD	HEX BR5	HEX BR4	VOLTS RMS	dBm (600Ω)
1771	6	EB	0.9693	1.95
1770	6	EA	0.9687	1.94
1769	6	E9	0.9682	1.94
1768	6	E8	0.9677	1.93
1767	6	E7	0.9671	1.93
1766	6	E6	0.9666	1.92
1765	6	E5	0.9660	1.92
1764	6	E4	0.9655	1.91
1763	6	E3	0.9649	1.91
1762	6	E2	0.9644	1.90
1761	6	E1	0.9638	1.90
1760	6	E0	0.9633	1.89
1759	6	DF	0.9627	1.89
1758	6	DE	0.9622	1.88
1757	6	DD	0.9616	1.88
1756	6	DC	0.9611	1.87
1755	6	DB	0.9605	1.87
1754	6	DA	0.9600	1.86
1753	6	D9	0.9594	1.86
1752	6	D8	0.9589	1.85
1751	6	D7	0.9583	1.85
1750	6	D6	0.9578	1.84
1749	6	D5	0.9573	1.84
1748	6	D4	0.9567	1.83
1747	6	D3	0.9562	1.83
1746	6	D2	0.9556	1.82
1745	6	D1	0.9551	1.82
1744	6	D0	0.9545	1.81
1743	6	CF	0.9540	1.81
1742	6	CE	0.9534	1.80
1741	6	CD	0.9529	1.80
1740	6	CC	0.9523	1.79
1739	6	CB	0.9518	1.79
1738	6	CA	0.9512	1.78
1737	6	C9	0.9507	1.78
1736	6	C8	0.9501	1.77
1735	6	C7	0.9496	1.77
1734	6	C6	0.9490	1.76
1733	6	C5	0.9485	1.76
1732	6	C4	0.9479	1.75
1731	6	C3	0.9474	1.75
1730	6	C2	0.9469	1.74
1729	6	C1	0.9463	1.74
1728	6	C0	0.9458	1.73
1727	6	BF	0.9452	1.73
1726	6	BE	0.9447	1.72
1725	6	BD	0.9441	1.72
1724	6	BC	0.9436	1.71
1723	6	BB	0.9430	1.71
1722	6	BA	0.9425	1.70
1721	6	B9	0.9419	1.70
1720	6	B8	0.9414	1.69
1719	6	B7	0.9408	1.69
1718	6	B6	0.9403	1.68
1717	6	B5	0.9397	1.68
1716	6	B4	0.9392	1.67
1715	6	B3	0.9386	1.67
1714	6	B2	0.9381	1.66
1713	6	B1	0.9375	1.66
1712	6	B0	0.9370	1.65
1711	6	AF	0.9365	1.65
1710	6	AE	0.9359	1.64
1709	6	AD	0.9354	1.64
1708	6	AC	0.9348	1.63
1707	6	AB	0.9343	1.63
1706	6	AA	0.9337	1.62
1705	6	A9	0.9332	1.62
1704	6	A8	0.9326	1.61
1703	6	A7	0.9321	1.61
1702	6	A6	0.9315	1.60
1701	6	A5	0.9310	1.60
1700	6	A4	0.9304	1.59
1699	6	A3	0.9299	1.59
1698	6	A2	0.9293	1.58
1697	6	A1	0.9288	1.58
1696	6	A0	0.9282	1.57
1695	6	9F	0.9277	1.57
1694	6	9E	0.9272	1.56
1693	6	9D	0.9266	1.56
1692	6	9C	0.9261	1.55
1691	6	9B	0.9255	1.55
1690	6	9A	0.9250	1.54
1689	6	99	0.9244	1.54
1688	6	98	0.9239	1.53
1687	6	97	0.9233	1.53
1686	6	96	0.9228	1.52
1685	6	95	0.9222	1.52
1684	6	94	0.9217	1.51
1683	6	93	0.9211	1.50
1682	6	92	0.9206	1.50
1681	6	91	0.9200	1.49
1680	6	90	0.9195	1.49
1679	6	8F	0.9189	1.48
1678	6	8E	0.9184	1.48
1677	6	8D	0.9178	1.47
1676	6	8C	0.9173	1.47
1675	6	8B	0.9168	1.46
1674	6	8A	0.9162	1.46
1673	6	89	0.9157	1.45
1672	6	88	0.9151	1.45
1671	6	87	0.9146	1.44
1670	6	86	0.9140	1.44
1669	6	85	0.9135	1.43
1668	6	84	0.9129	1.43
1667	6	83	0.9124	1.42
1666	6	82	0.9118	1.42
1665	6	81	0.9113	1.41
1664	6	80	0.9107	1.41
1663	6	7F	0.9102	1.40
1662	6	7E	0.9096	1.40
1661	6	7D	0.9091	1.39
1660	6	7C	0.9085	1.39
1659	6	7B	0.9080	1.38
1658	6	7A	0.9074	1.37
1657	6	79	0.9069	1.37
1656	6	78	0.9064	1.36
1655	6	77	0.9058	1.36
1654	6	76	0.9053	1.35
1653	6	75	0.9047	1.35
1652	6	74	0.9042	1.34
1651	6	73	0.9036	1.34
1650	6	72	0.9031	1.33
1649	6	71	0.9025	1.33
1648	6	70	0.9020	1.32
1647	6	6F	0.9014	1.32
1646	6	6E	0.9009	1.31
1645	6	6D	0.9003	1.31
1644	6	6C	0.8998	1.30
1643	6	6B	0.8992	1.30
1642	6	6A	0.8987	1.29
1641	6	69	0.8981	1.29
1640	6	68	0.8976	1.28
1639	6	67	0.8970	1.27
1638	6	66	0.8965	1.27
1637	6	65	0.8960	1.26
1636	6	64	0.8954	1.26
1635	6	63	0.8949	1.25
1634	6	62	0.8943	1.25

Table 8-3. Attenuation Coefficients for Tone Generator (continued)

BCD	HEX BR5	HEX BR4	VOLTS RMS	dBm (600Ω)
1633	6	61	0.8938	1.24
1632	6	60	0.8932	1.24
1631	6	5F	0.8927	1.23
1630	6	5E	0.8921	1.23
1629	6	5D	0.8916	1.22
1628	6	5C	0.8910	1.22
1627	6	5B	0.8905	1.21
1626	6	5A	0.8899	1.21
1625	6	59	0.8894	1.20
1624	6	58	0.8888	1.19
1623	6	57	0.8883	1.19
1622	6	56	0.8877	1.18
1621	6	55	0.8872	1.18
1620	6	54	0.8866	1.17
1619	6	53	0.8861	1.17
1618	6	52	0.8856	1.16
1617	6	51	0.8850	1.16
1616	6	50	0.8845	1.15
1615	6	4F	0.8839	1.15
1614	6	4E	0.8834	1.14
1613	6	4D	0.8828	1.14
1612	6	4C	0.8823	1.13
1611	6	4B	0.8817	1.13
1610	6	4A	0.8812	1.12
1609	6	49	0.8806	1.11
1608	6	48	0.8801	1.11
1607	6	47	0.8795	1.10
1606	6	46	0.8790	1.10
1605	6	45	0.8784	1.09
1604	6	44	0.8779	1.09
1603	6	43	0.8773	1.08
1602	6	42	0.8768	1.08
1601	6	41	0.8763	1.07
1600	6	40	0.8757	1.07
1599	6	3F	0.8752	1.06
1598	6	3E	0.8746	1.05
1597	6	3D	0.8741	1.05
1596	6	3C	0.8735	1.04
1595	6	3B	0.8730	1.04
1594	6	3A	0.8724	1.03
1593	6	39	0.8719	1.03
1592	6	38	0.8713	1.02
1591	6	37	0.8708	1.02
1590	6	36	0.8702	1.01
1589	6	35	0.8697	1.01
1588	6	34	0.8691	1.00
1587	6	33	0.8686	0.99
1586	6	32	0.8680	0.99
1585	6	31	0.8675	0.98
1584	6	30	0.8669	0.98
1583	6	2F	0.8664	0.97
1582	6	2E	0.8659	0.97
1581	6	2D	0.8653	0.96
1580	6	2C	0.8648	0.96
1579	6	2B	0.8642	0.95
1578	6	2A	0.8637	0.95
1577	6	29	0.8631	0.94
1576	6	28	0.8626	0.93
1575	6	27	0.8620	0.93
1574	6	26	0.8615	0.92
1573	6	25	0.8609	0.92
1572	6	24	0.8604	0.91
1571	6	23	0.8598	0.91
1570	6	22	0.8593	0.90
1569	6	21	0.8587	0.90
1568	6	20	0.8582	0.89
1567	6	1F	0.8576	0.88
1566	6	1E	0.8571	0.88
1565	6	1D	0.8565	0.87
1564	6	1C	0.8560	0.87
1563	6	1B	0.8555	0.86
1562	6	1A	0.8549	0.86
1561	6	19	0.8544	0.85
1560	6	18	0.8538	0.85
1559	6	17	0.8533	0.84
1558	6	16	0.8527	0.83
1557	6	15	0.8522	0.83
1556	6	14	0.8516	0.82
1555	6	13	0.8511	0.82
1554	6	12	0.8505	0.81
1553	6	11	0.8500	0.81
1552	6	10	0.8494	0.80
1551	6	0F	0.8489	0.80
1550	6	0E	0.8483	0.79
1549	6	0D	0.8478	0.78
1548	6	0C	0.8472	0.78
1547	6	0B	0.8467	0.77
1546	6	0A	0.8461	0.77
1545	6	09	0.8456	0.76
1544	6	08	0.8451	0.76
1543	6	07	0.8445	0.75
1542	6	06	0.8440	0.74
1541	6	05	0.8434	0.74
1540	6	04	0.8429	0.73
1539	6	03	0.8423	0.73
1538	6	02	0.8418	0.72
1537	6	01	0.8412	0.72
1536	6	00	0.8407	0.71
1535	5	FF	0.8401	0.71
1534	5	FE	0.8396	0.70
1533	5	FD	0.8390	0.69
1532	5	FC	0.8385	0.69
1531	5	FB	0.8379	0.68
1530	5	FA	0.8374	0.68
1529	5	F9	0.8368	0.67
1528	5	F8	0.8363	0.67
1527	5	F7	0.8357	0.66
1526	5	F6	0.8352	0.65
1525	5	F5	0.8347	0.65
1524	5	F4	0.8341	0.64
1523	5	F3	0.8336	0.64
1522	5	F2	0.8330	0.63
1521	5	F1	0.8325	0.63
1520	5	F0	0.8319	0.62
1519	5	EF	0.8314	0.61
1518	5	EE	0.8308	0.61
1517	5	ED	0.8303	0.60
1516	5	EC	0.8297	0.60
1515	5	EB	0.8292	0.59
1514	5	EA	0.8286	0.59
1513	5	E9	0.8281	0.58
1512	5	E8	0.8275	0.57
1511	5	E7	0.8270	0.57
1510	5	E6	0.8264	0.56
1509	5	E5	0.8259	0.56
1508	5	E4	0.8254	0.55
1507	5	E3	0.8248	0.55
1506	5	E2	0.8243	0.54
1505	5	E1	0.8237	0.53
1504	5	E0	0.8232	0.53
1503	5	DF	0.8226	0.52
1502	5	DE	0.8221	0.52
1501	5	DD	0.8215	0.51
1500	5	DC	0.8210	0.51
1499	5	DB	0.8204	0.50
1498	5	DA	0.8199	0.49
1497	5	D9	0.8193	0.49
1496	5	D8	0.8188	0.48

Table 8-3. Attenuation Coefficients for Tone Generator (continued)

BCD	HEX BR5	HEX BR4	VOLTS RMS	dBm (600Ω)
1495	5	D7	0.8182	0.48
1494	5	D6	0.8177	0.47
1493	5	D5	0.8171	0.46
1492	5	D4	0.8166	0.46
1491	5	D3	0.8160	0.45
1490	5	D2	0.8155	0.45
1489	5	D1	0.8150	0.44
1488	5	D0	0.8144	0.44
1487	5	CF	0.8139	0.43
1486	5	CE	0.8133	0.42
1485	5	CD	0.8128	0.42
1484	5	CC	0.8122	0.41
1483	5	CB	0.8117	0.41
1482	5	CA	0.8111	0.40
1481	5	C9	0.8106	0.39
1480	5	C8	0.8100	0.39
1479	5	C7	0.8095	0.38
1478	5	C6	0.8089	0.38
1477	5	C5	0.8084	0.37
1476	5	C4	0.8078	0.36
1475	5	C3	0.8073	0.36
1474	5	C2	0.8067	0.35
1473	5	C1	0.8062	0.35
1472	5	C0	0.8056	0.34
1471	5	BF	0.8051	0.34
1470	5	BE	0.8046	0.33
1469	5	BD	0.8040	0.32
1468	5	BC	0.8035	0.32
1467	5	BB	0.8029	0.31
1466	5	BA	0.8024	0.31
1465	5	B9	0.8018	0.30
1464	5	B8	0.8013	0.29
1463	5	B7	0.8007	0.29
1462	5	B6	0.8002	0.28
1461	5	B5	0.7996	0.28
1460	5	B4	0.7991	0.27
1459	5	B3	0.7985	0.26
1458	5	B2	0.7980	0.26
1457	5	B1	0.7974	0.25
1456	5	B0	0.7969	0.25
1455	5	AF	0.7963	0.24
1454	5	AE	0.7958	0.23
1453	5	AD	0.7952	0.23
1452	5	AC	0.7947	0.22
1451	5	AB	0.7942	0.22
1450	5	AA	0.7936	0.21

BCD	HEX BR5	HEX BR4	VOLTS RMS	dBm (600Ω)
1449	5	A9	0.7931	0.20
1448	5	A8	0.7925	0.20
1447	5	A7	0.7920	0.19
1446	5	A6	0.7914	0.19
1445	5	A5	0.7909	0.18
1444	5	A4	0.7903	0.17
1443	5	A3	0.7898	0.17
1442	5	A2	0.7892	0.16
1441	5	A1	0.7887	0.16
1440	5	A0	0.7881	0.15
1439	5	9F	0.7876	0.14
1438	5	9E	0.7870	0.14
1437	5	9D	0.7865	0.13
1436	5	9C	0.7859	0.13
1435	5	9B	0.7854	0.12
1434	5	9A	0.7848	0.11
1433	5	99	0.7843	0.11
1432	5	98	0.7838	0.10
1431	5	97	0.7832	0.10
1430	5	96	0.7827	0.09
1429	5	95	0.7821	0.08
1428	5	94	0.7816	0.08
1427	5	93	0.7810	0.07
1426	5	92	0.7805	0.07
1425	5	91	0.7799	0.06
1424	5	90	0.7794	0.05
1423	5	8F	0.7788	0.05
1422	5	8E	0.7783	0.04
1421	5	8D	0.7777	0.04
1420	5	8C	0.7772	0.03
1419	5	8B	0.7766	0.02
1418	5	8A	0.7761	0.02
1417	5	89	0.7755	0.01
1416	5	88	0.7750	0.00
1415	5	87	0.7744	0.00
1414	5	86	0.7739	–0.01
1413	5	85	0.7734	–0.01
1412	5	84	0.7728	–0.02
1411	5	83	0.7723	–0.03
1410	5	82	0.7717	–0.03
1409	5	81	0.7712	–0.04
1408	5	80	0.7706	–0.04
1407	5	7F	0.7701	–0.05
1406	5	7E	0.7695	–0.06
1405	5	7D	0.7690	–0.06
1404	5	7C	0.7684	–0.07

BCD	HEX BR5	HEX BR4	VOLTS RMS	dBm (600Ω)
1403	5	7B	0.7679	–0.08
1402	5	7A	0.7673	–0.08
1401	5	79	0.7668	–0.09
1400	5	78	0.7662	–0.09
1399	5	77	0.7657	–0.10
1398	5	76	0.7651	–0.11
1397	5	75	0.7646	–0.11
1396	5	74	0.7641	–0.12
1395	5	73	0.7635	–0.13
1394	5	72	0.7630	–0.13
1393	5	71	0.7624	–0.14
1392	5	70	0.7619	–0.14
1391	5	6F	0.7613	–0.15
1390	5	6E	0.7608	–0.16
1389	5	6D	0.7602	–0.16
1388	5	6C	0.7597	–0.17
1387	5	6B	0.7591	–0.18
1386	5	6A	0.7586	–0.18
1385	5	69	0.7580	–0.19
1384	5	68	0.7575	–0.19
1383	5	67	0.7569	–0.20
1382	5	66	0.7564	–0.21
1381	5	65	0.7558	–0.21
1380	5	64	0.7553	–0.22
1379	5	63	0.7547	–0.23
1378	5	62	0.7542	–0.23
1377	5	61	0.7537	–0.24
1376	5	60	0.7531	–0.24
1375	5	5F	0.7526	–0.25
1374	5	5E	0.7520	–0.26
1373	5	5D	0.7515	–0.26
1372	5	5C	0.7509	–0.27
1371	5	5B	0.7504	–0.28
1370	5	5A	0.7498	–0.28
1369	5	59	0.7493	–0.29
1368	5	58	0.7487	–0.30
1367	5	57	0.7482	–0.30
1366	5	56	0.7476	–0.31
1365	5	55	0.7471	–0.31
1364	5	54	0.7465	–0.32
1363	5	53	0.7460	–0.33
1362	5	52	0.7454	–0.33
1361	5	51	0.7449	–0.34
1360	5	50	0.7443	–0.35
1359	5	4F	0.7438	–0.35
1358	5	4E	0.7433	–0.36

Table 8-3. Attenuation Coefficients for Tone Generator (continued)

BCD	HEX BR5	HEX BR4	VOLTS RMS	dBm (600Ω)
1357	5	4D	0.7427	–0.37
1356	5	4C	0.7422	–0.37
1355	5	4B	0.7416	–0.38
1354	5	4A	0.7411	–0.38
1353	5	49	0.7405	–0.39
1352	5	48	0.7400	–0.40
1351	5	47	0.7394	–0.40
1350	5	46	0.7389	–0.41
1349	5	45	0.7383	–0.42
1348	5	44	0.7378	–0.42
1347	5	43	0.7372	–0.43
1346	5	42	0.7367	–0.44
1345	5	41	0.7361	–0.44
1344	5	40	0.7356	–0.45
1343	5	3F	0.7350	–0.46
1342	5	3E	0.7345	–0.46
1341	5	3D	0.7339	–0.47
1340	5	3C	0.7334	–0.47
1339	5	3B	0.7329	–0.48
1338	5	3A	0.7323	–0.49
1337	5	39	0.7318	–0.49
1336	5	38	0.7312	–0.50
1335	5	37	0.7307	–0.51
1334	5	36	0.7301	–0.51
1333	5	35	0.7296	–0.52
1332	5	34	0.7290	–0.53
1331	5	33	0.7285	–0.53
1330	5	32	0.7279	–0.54
1329	5	31	0.7274	–0.55
1328	5	30	0.7268	–0.55
1327	5	2F	0.7263	–0.56
1326	5	2E	0.7257	–0.57
1325	5	2D	0.7252	–0.57
1324	5	2C	0.7246	–0.58
1323	5	2B	0.7241	–0.59
1322	5	2A	0.7235	–0.59
1321	5	29	0.7230	–0.60
1320	5	28	0.7225	–0.61
1319	5	27	0.7219	–0.61
1318	5	26	0.7214	–0.62
1317	5	25	0.7208	–0.63
1316	5	24	0.7203	–0.63
1315	5	23	0.7197	–0.64
1314	5	22	0.7192	–0.64
1313	5	21	0.7186	–0.65
1312	5	20	0.7181	–0.66
1311	5	1F	0.7175	–0.66
1310	5	1E	0.7170	–0.67
1309	5	1D	0.7164	–0.68
1308	5	1C	0.7159	–0.68
1307	5	1B	0.7153	–0.69
1306	5	1A	0.7148	–0.70
1305	5	19	0.7142	–0.70
1304	5	18	0.7137	–0.71
1303	5	17	0.7132	–0.72
1302	5	16	0.7126	–0.72
1301	5	15	0.7121	–0.73
1300	5	14	0.7115	–0.74
1299	5	13	0.7110	–0.74
1298	5	12	0.7104	–0.75
1297	5	11	0.7099	–0.76
1296	5	10	0.7093	–0.76
1295	5	0F	0.7088	–0.77
1294	5	0E	0.7082	–0.78
1293	5	0D	0.7077	–0.78
1292	5	0C	0.7071	–0.79
1291	5	0B	0.7066	–0.80
1290	5	0A	0.7060	–0.80
1289	5	09	0.7055	–0.81
1288	5	08	0.7049	–0.82
1287	5	07	0.7044	–0.83
1286	5	06	0.7038	–0.83
1285	5	05	0.7033	–0.84
1284	5	04	0.7028	–0.85
1283	5	03	0.7022	–0.85
1282	5	02	0.7017	–0.86
1281	5	01	0.7011	–0.87
1280	5	00	0.7006	–0.87
1279	4	FF	0.7000	–0.88
1278	4	FE	0.6995	–0.89
1277	4	FD	0.6989	–0.89
1276	4	FC	0.6984	–0.90
1275	4	FB	0.6978	–0.91
1274	4	FA	0.6973	–0.91
1273	4	F9	0.6967	–0.92
1272	4	F8	0.6962	–0.93
1271	4	F7	0.6956	–0.93
1270	4	F6	0.6951	–0.94
1269	4	F5	0.6945	–0.95
1268	4	F4	0.6940	–0.95
1267	4	F3	0.6934	–0.96
1266	4	F2	0.6929	–0.97
1265	4	F1	0.6924	–0.97
1264	4	F0	0.6918	–0.98
1263	4	EF	0.6913	–0.99
1262	4	EE	0.6907	–1.00
1261	4	ED	0.6902	–1.00
1260	4	EC	0.6896	–1.01
1259	4	EB	0.6891	–1.02
1258	4	EA	0.6885	–1.02
1257	4	E9	0.6880	–1.03
1256	4	E8	0.6874	–1.04
1255	4	E7	0.6869	–1.04
1254	4	E6	0.6863	–1.05
1253	4	E5	0.6858	–1.06
1252	4	E4	0.6852	–1.06
1251	4	E3	0.6847	–1.07
1250	4	E2	0.6841	–1.08
1249	4	E1	0.6836	–1.09
1248	4	E0	0.6830	–1.09
1247	4	DF	0.6825	–1.10
1246	4	DE	0.6820	–1.11
1245	4	DD	0.6814	–1.11
1244	4	DC	0.6809	–1.12
1243	4	DB	0.6803	–1.13
1242	4	DA	0.6798	–1.13
1241	4	D9	0.6792	–1.14
1240	4	D8	0.6787	–1.15
1239	4	D7	0.6781	–1.16
1238	4	D6	0.6776	–1.16
1237	4	D5	0.6770	–1.17
1236	4	D4	0.6765	–1.18
1235	4	D3	0.6759	–1.18
1234	4	D2	0.6754	–1.19
1233	4	D1	0.6748	–1.20
1232	4	D0	0.6743	–1.20
1231	4	CF	0.6737	–1.21
1230	4	CE	0.6732	–1.22
1229	4	CD	0.6726	–1.23
1228	4	CC	0.6721	–1.23
1227	4	CB	0.6716	–1.24
1226	4	CA	0.6710	–1.25
1225	4	C9	0.6705	–1.25
1224	4	C8	0.6699	–1.26
1223	4	C7	0.6694	–1.27
1222	4	C6	0.6688	–1.28
1221	4	C5	0.6683	–1.28
1220	4	C4	0.6677	–1.29

Table 8-3. Attenuation Coefficients for Tone Generator (continued)

BCD	HEX BR5	HEX BR4	VOLTS RMS	dBm (600Ω)
1219	4	C3	0.6672	–1.30
1218	4	C2	0.6666	–1.30
1217	4	C1	0.6661	–1.31
1216	4	C0	0.6655	–1.32
1215	4	BF	0.6650	–1.33
1214	4	BE	0.6644	–1.33
1213	4	BD	0.6639	–1.34
1212	4	BC	0.6633	–1.35
1211	4	BB	0.6628	–1.35
1210	4	BA	0.6623	–1.36
1209	4	B9	0.6617	–1.37
1208	4	B8	0.6612	–1.38
1207	4	B7	0.6606	–1.38
1206	4	B6	0.6601	–1.39
1205	4	B5	0.6595	–1.40
1204	4	B4	0.6590	–1.40
1203	4	B3	0.6584	–1.41
1202	4	B2	0.6579	–1.42
1201	4	B1	0.6573	–1.43
1200	4	B0	0.6568	–1.43
1199	4	AF	0.6562	–1.44
1198	4	AE	0.6557	–1.45
1197	4	AD	0.6551	–1.45
1196	4	AC	0.6546	–1.46
1195	4	AB	0.6540	–1.47
1194	4	AA	0.6535	–1.48
1193	4	A9	0.6529	–1.48
1192	4	A8	0.6524	–1.49
1191	4	A7	0.6519	–1.50
1190	4	A6	0.6513	–1.51
1189	4	A5	0.6508	–1.51
1188	4	A4	0.6502	–1.52
1187	4	A3	0.6497	–1.53
1186	4	A2	0.6491	–1.54
1185	4	A1	0.6486	–1.54
1184	4	A0	0.6480	–1.55
1183	4	9F	0.6475	–1.56
1182	4	9E	0.6469	–1.56
1181	4	9D	0.6464	–1.57
1180	4	9C	0.6458	–1.58
1179	4	9B	0.6453	–1.59
1178	4	9A	0.6447	–1.59
1177	4	99	0.6442	–1.60
1176	4	98	0.6436	–1.61
1175	4	97	0.6431	–1.62
1174	4	96	0.6425	–1.62
1173	4	95	0.6420	–1.63
1172	4	94	0.6415	–1.64
1171	4	93	0.6409	–1.65
1170	4	92	0.6404	–1.65
1169	4	91	0.6398	–1.66
1168	4	90	0.6393	–1.67
1167	4	8F	0.6387	–1.68
1166	4	8E	0.6382	–1.68
1165	4	8D	0.6376	–1.69
1164	4	8C	0.6371	–1.70
1163	4	8B	0.6365	–1.71
1162	4	8A	0.6360	–1.71
1161	4	89	0.6354	–1.72
1160	4	88	0.6349	–1.73
1159	4	87	0.6343	–1.74
1158	4	86	0.6338	–1.74
1157	4	85	0.6332	–1.75
1156	4	84	0.6327	–1.76
1155	4	83	0.6321	–1.77
1154	4	82	0.6316	–1.77
1153	4	81	0.6311	–1.78
1152	4	80	0.6305	–1.79
1151	4	7F	0.6300	–1.80
1150	4	7E	0.6294	–1.80
1149	4	7D	0.6289	–1.81
1148	4	7C	0.6283	–1.82
1147	4	7B	0.6278	–1.83
1146	4	7A	0.6272	–1.83
1145	4	79	0.6267	–1.84
1144	4	78	0.6261	–1.85
1143	4	77	0.6256	–1.86
1142	4	76	0.6250	–1.86
1141	4	75	0.6245	–1.87
1140	4	74	0.6239	–1.88
1139	4	73	0.6234	–1.89
1138	4	72	0.6228	–1.89
1137	4	71	0.6223	–1.90
1136	4	70	0.6217	–1.91
1135	4	6F	0.6212	–1.92
1134	4	6E	0.6207	–1.92
1133	4	6D	0.6201	–1.93
1132	4	6C	0.6196	–1.94
1131	4	6B	0.6190	–1.95
1130	4	6A	0.6185	–1.96
1129	4	69	0.6179	–1.96
1128	4	68	0.6174	–1.97
1127	4	67	0.6168	–1.98
1126	4	66	0.6163	–1.99
1125	4	65	0.6157	–1.99
1124	4	64	0.6152	–2.00
1123	4	63	0.6146	–2.01
1122	4	62	0.6141	–2.02
1121	4	61	0.6135	–2.02
1120	4	60	0.6130	–2.03
1119	4	5F	0.6124	–2.04
1118	4	5E	0.6119	–2.05
1117	4	5D	0.6114	–2.06
1116	4	5C	0.6108	–2.06
1115	4	5B	0.6103	–2.07
1114	4	5A	0.6097	–2.08
1113	4	59	0.6092	–2.09
1112	4	58	0.6086	–2.09
1111	4	57	0.6081	–2.10
1110	4	56	0.6075	–2.11
1109	4	55	0.6070	–2.12
1108	4	54	0.6064	–2.13
1107	4	53	0.6059	–2.13
1106	4	52	0.6053	–2.14
1105	4	51	0.6048	–2.15
1104	4	50	0.6042	–2.16
1103	4	4F	0.6037	–2.17
1102	4	4E	0.6031	–2.17
1101	4	4D	0.6026	–2.18
1100	4	4C	0.6020	–2.19
1099	4	4B	0.6015	–2.20
1098	4	4A	0.6010	–2.20
1097	4	49	0.6004	–2.21
1096	4	48	0.5999	–2.22
1095	4	47	0.5993	–2.23
1094	4	46	0.5988	–2.24
1093	4	45	0.5982	–2.24
1092	4	44	0.5977	–2.25
1091	4	43	0.5971	–2.26
1090	4	42	0.5966	–2.27
1089	4	41	0.5960	–2.28
1088	4	40	0.5955	–2.28
1087	4	3F	0.5949	–2.29
1086	4	3E	0.5944	–2.30
1085	4	3D	0.5938	–2.31
1084	4	3C	0.5933	–2.32
1083	4	3B	0.5927	–2.32
1082	4	3A	0.5922	–2.33

Table 8-3. Attenuation Coefficients for Tone Generator (continued)

BCD	HEX BR5	HEX BR4	VOLTS RMS	dBm (600Ω)
1081	4	39	0.5916	–2.34
1080	4	38	0.5911	–2.35
1079	4	37	0.5906	–2.36
1078	4	36	0.5900	–2.36
1077	4	35	0.5895	–2.37
1076	4	34	0.5889	–2.38
1075	4	33	0.5884	–2.39
1074	4	32	0.5878	–2.40
1073	4	31	0.5873	–2.40
1072	4	30	0.5867	–2.41
1071	4	2F	0.5862	–2.42
1070	4	2E	0.5856	–2.43
1069	4	2D	0.5851	–2.44
1068	4	2C	0.5845	–2.45
1067	4	2B	0.5840	–2.45
1066	4	2A	0.5834	–2.46
1065	4	29	0.5829	–2.47
1064	4	28	0.5823	–2.48
1063	4	27	0.5818	–2.49
1062	4	26	0.5812	–2.49
1061	4	25	0.5807	–2.50
1060	4	24	0.5802	–2.51
1059	4	23	0.5796	–2.52
1058	4	22	0.5791	–2.53
1057	4	21	0.5785	–2.54
1056	4	20	0.5780	–2.54
1055	4	1F	0.5774	–2.55
1054	4	1E	0.5769	–2.56
1053	4	1D	0.5763	–2.57
1052	4	1C	0.5758	–2.58
1051	4	1B	0.5752	–2.58
1050	4	1A	0.5747	–2.59
1049	4	19	0.5741	–2.60
1048	4	18	0.5736	–2.61
1047	4	17	0.5730	–2.62
1046	4	16	0.5725	–2.63
1045	4	15	0.5719	–2.63
1044	4	14	0.5714	–2.64
1043	4	13	0.5708	–2.65
1042	4	12	0.5703	–2.66
1041	4	11	0.5698	–2.67
1040	4	10	0.5692	–2.68
1039	4	0F	0.5687	–2.68
1038	4	0E	0.5681	–2.69
1037	4	0D	0.5676	–2.70
1036	4	0C	0.5670	–2.71
1035	4	0B	0.5665	–2.72
1034	4	0A	0.5659	–2.73
1033	4	09	0.5654	–2.73
1032	4	08	0.5648	–2.74
1031	4	07	0.5643	–2.75
1030	4	06	0.5637	–2.76
1029	4	05	0.5632	–2.77
1028	4	04	0.5626	–2.78
1027	4	03	0.5621	–2.79
1026	4	02	0.5615	–2.79
1025	4	01	0.5610	–2.80
1024	4	00	0.5605	–2.81
1023	3	FF	0.5599	–2.82
1022	3	FE	0.5594	–2.83
1021	3	FD	0.5588	–2.84
1020	3	FC	0.5583	–2.84
1019	3	FB	0.5577	–2.85
1018	3	FA	0.5572	–2.86
1017	3	F9	0.5566	–2.87
1016	3	F8	0.5561	–2.88
1015	3	F7	0.5555	–2.89
1014	3	F6	0.5550	–2.90
1013	3	F5	0.5544	–2.90
1012	3	F4	0.5539	–2.91
1011	3	F3	0.5533	–2.92
1010	3	F2	0.5528	–2.93
1009	3	F1	0.5522	–2.94
1008	3	F0	0.5517	–2.95
1007	3	EF	0.5511	–2.96
1006	3	EE	0.5506	–2.96
1005	3	ED	0.5501	–2.97
1004	3	EC	0.5495	–2.98
1003	3	EB	0.5490	–2.99
1002	3	EA	0.5484	–3.00
1001	3	E9	0.5479	–3.01
1000	3	E8	0.5473	–3.02
999	3	E7	0.5468	–3.03
998	3	E6	0.5462	–3.03
997	3	E5	0.5457	–3.04
996	3	E4	0.5451	–3.05
995	3	E3	0.5446	–3.06
994	3	E2	0.5440	–3.07
993	3	E1	0.5435	–3.08
992	3	E0	0.5429	–3.09
991	3	DF	0.5424	–3.10
990	3	DE	0.5418	–3.10
989	3	DD	0.5413	–3.11
988	3	DC	0.5407	–3.12
987	3	DB	0.5402	–3.13
986	3	DA	0.5397	–3.14
985	3	D9	0.5391	–3.15
984	3	D8	0.5386	–3.16
983	3	D7	0.5380	–3.17
982	3	D6	0.5375	–3.17
981	3	D5	0.5369	–3.18
980	3	D4	0.5364	–3.19
979	3	D3	0.5358	–3.20
978	3	D2	0.5353	–3.21
977	3	D1	0.5347	–3.22
976	3	D0	0.5342	–3.23
975	3	CF	0.5336	–3.24
974	3	CE	0.5331	–3.25
973	3	CD	0.5325	–3.25
972	3	CC	0.5320	–3.26
971	3	CB	0.5314	–3.27
970	3	CA	0.5309	–3.28
969	3	C9	0.5303	–3.29
968	3	C8	0.5298	–3.30
967	3	C7	0.5293	–3.31
966	3	C6	0.5287	–3.32
965	3	C5	0.5282	–3.33
964	3	C4	0.5276	–3.34
963	3	C3	0.5271	–3.34
962	3	C2	0.5265	–3.35
961	3	C1	0.5260	–3.36
960	3	C0	0.5254	–3.37
959	3	BF	0.5249	–3.38
958	3	BE	0.5243	–3.39
957	3	BD	0.5238	–3.40
956	3	BC	0.5232	–3.41
955	3	BB	0.5227	–3.42
954	3	BA	0.5221	–3.43
953	3	B9	0.5216	–3.43
952	3	B8	0.5210	–3.44
951	3	B7	0.5205	–3.45
950	3	B6	0.5199	–3.46
949	3	B5	0.5194	–3.47
948	3	B4	0.5189	–3.48
947	3	B3	0.5183	–3.49
946	3	B2	0.5178	–3.50
945	3	B1	0.5172	–3.51
944	3	B0	0.5167	–3.52

Table 8-3. Attenuation Coefficients for Tone Generator (continued)

BCD	HEX BR5	HEX BR4	VOLTS RMS	dBm (600Ω)
943	3	AF	0.5161	–3.53
942	3	AE	0.5156	–3.54
941	3	AD	0.5150	–3.54
940	3	AC	0.5145	–3.55
939	3	AB	0.5139	–3.56
938	3	AA	0.5134	–3.57
937	3	A9	0.5128	–3.58
936	3	A8	0.5123	–3.59
935	3	A7	0.5117	–3.60
934	3	A6	0.5112	–3.61
933	3	A5	0.5106	–3.62
932	3	A4	0.5101	–3.63
931	3	A3	0.5095	–3.64
930	3	A2	0.5090	–3.65
929	3	A1	0.5085	–3.66
928	3	A0	0.5079	–3.67
927	3	9F	0.5074	–3.68
926	3	9E	0.5068	–3.68
925	3	9D	0.5063	–3.69
924	3	9C	0.5057	–3.70
923	3	9B	0.5052	–3.71
922	3	9A	0.5046	–3.72
921	3	99	0.5041	–3.73
920	3	98	0.5035	–3.74
919	3	97	0.5030	–3.75
918	3	96	0.5024	–3.76
917	3	95	0.5019	–3.77
916	3	94	0.5013	–3.78
915	3	93	0.5008	–3.79
914	3	92	0.5002	–3.80
913	3	91	0.4997	–3.81
912	3	90	0.4992	–3.82
911	3	8F	0.4986	–3.83
910	3	8E	0.4981	–3.84
909	3	8D	0.4975	–3.85
908	3	8C	0.4970	–3.86
907	3	8B	0.4964	–3.86
906	3	8A	0.4959	–3.87
905	3	89	0.4953	–3.88
904	3	88	0.4948	–3.89
903	3	87	0.4942	–3.90
902	3	86	0.4937	–3.91
901	3	85	0.4931	–3.92
900	3	84	0.4926	–3.93
899	3	83	0.4920	–3.94
898	3	82	0.4915	–3.95
897	3	81	0.4909	–3.96
896	3	80	0.4904	–3.97
895	3	7F	0.4898	–3.98
894	3	7E	0.4893	–3.99
893	3	7D	0.4888	–4.00
892	3	7C	0.4882	–4.01
891	3	7B	0.4877	–4.02
890	3	7A	0.4871	–4.03
889	3	79	0.4866	–4.04
888	3	78	0.4860	–4.05
887	3	77	0.4855	–4.06
886	3	76	0.4849	–4.07
885	3	75	0.4844	–4.08
884	3	74	0.4838	–4.09
883	3	73	0.4833	–4.10
882	3	72	0.4827	–4.11
881	3	71	0.4822	–4.12
880	3	70	0.4816	–4.13
879	3	6F	0.4811	–4.14
878	3	6E	0.4805	–4.15
877	3	6D	0.4800	–4.16
876	3	6C	0.4794	–4.17
875	3	6B	0.4789	–4.18
874	3	6A	0.4784	–4.19
873	3	69	0.4778	–4.20
872	3	68	0.4773	–4.21
871	3	67	0.4767	–4.22
870	3	66	0.4762	–4.23
869	3	65	0.4756	–4.24
868	3	64	0.4751	–4.25
867	3	63	0.4745	–4.26
866	3	62	0.4740	–4.27
865	3	61	0.4734	–4.28
864	3	60	0.4729	–4.29
863	3	5F	0.4723	–4.30
862	3	5E	0.4718	–4.31
861	3	5D	0.4712	–4.32
860	3	5C	0.4707	–4.33
859	3	5B	0.4701	–4.34
858	3	5A	0.4696	–4.35
857	3	59	0.4690	–4.36
856	3	58	0.4685	–4.37
855	3	57	0.4680	–4.38
854	3	56	0.4674	–4.39
853	3	55	0.4669	–4.40
852	3	54	0.4663	–4.41
851	3	53	0.4658	–4.42
850	3	52	0.4652	–4.43
849	3	51	0.4647	–4.44
848	3	50	0.4641	–4.45
847	3	4F	0.4636	–4.46
846	3	4E	0.4630	–4.47
845	3	4D	0.4625	–4.48
844	3	4C	0.4619	–4.49
843	3	4B	0.4614	–4.50
842	3	4A	0.4608	–4.51
841	3	49	0.4603	–4.52
840	3	48	0.4597	–4.53
839	3	47	0.4592	–4.54
838	3	46	0.4586	–4.55
837	3	45	0.4581	–4.56
836	3	44	0.4576	–4.57
835	3	43	0.4570	–4.58
834	3	42	0.4565	–4.59
833	3	41	0.4559	–4.60
832	3	40	0.4554	–4.61
831	3	3F	0.4548	–4.62
830	3	3E	0.4543	–4.64
829	3	3D	0.4537	–4.65
828	3	3C	0.4532	–4.66
827	3	3B	0.4526	–4.67
826	3	3A	0.4521	–4.68
825	3	39	0.4515	–4.69
824	3	38	0.4510	–4.70
823	3	37	0.4504	–4.71
822	3	36	0.4499	–4.72
821	3	35	0.4493	–4.73
820	3	34	0.4488	–4.74
819	3	33	0.4483	–4.75
818	3	32	0.4477	–4.76
817	3	31	0.4472	–4.77
816	3	30	0.4466	–4.78
815	3	2F	0.4461	–4.79
814	3	2E	0.4455	–4.80
813	3	2D	0.4450	–4.81
812	3	2C	0.4444	–4.83
811	3	2B	0.4439	–4.84
810	3	2A	0.4433	–4.85
809	3	29	0.4428	–4.86
808	3	28	0.4422	–4.87
807	3	27	0.4417	–4.88
806	3	26	0.4411	–4.89

Table 8-3. Attenuation Coefficients for Tone Generator (continued)

BCD	HEX BR5	HEX BR4	VOLTS RMS	dBm (600Ω)
805	3	25	0.4406	–4.90
804	3	24	0.4400	–4.91
803	3	23	0.4395	–4.92
802	3	22	0.4389	–4.93
801	3	21	0.4384	–4.94
800	3	20	0.4379	–4.95
799	3	1F	0.4373	–4.97
798	3	1E	0.4368	–4.98
797	3	1D	0.4362	–4.99
796	3	1C	0.4357	–5.00
795	3	1B	0.4351	–5.01
794	3	1A	0.4346	–5.02
793	3	19	0.4340	–5.03
792	3	18	0.4335	–5.04
791	3	17	0.4329	–5.05
790	3	16	0.4324	–5.06
789	3	15	0.4318	–5.08
788	3	14	0.4313	–5.09
787	3	13	0.4307	–5.10
786	3	12	0.4302	–5.11
785	3	11	0.4296	–5.12
784	3	10	0.4291	–5.13
783	3	0F	0.4285	–5.14
782	3	0E	0.4280	–5.15
781	3	0D	0.4275	–5.16
780	3	0C	0.4269	–5.17
779	3	0B	0.4264	–5.19
778	3	0A	0.4258	–5.20
777	3	09	0.4253	–5.21
776	3	08	0.4247	–5.22
775	3	07	0.4242	–5.23
774	3	06	0.4236	–5.24
773	3	05	0.4231	–5.25
772	3	04	0.4225	–5.26
771	3	03	0.4220	–5.28
770	3	02	0.4214	–5.29
769	3	01	0.4209	–5.30
768	3	00	0.4203	–5.31
767	2	FF	0.4198	–5.32
766	2	FE	0.4192	–5.33
765	2	FD	0.4187	–5.34
764	2	FC	0.4181	–5.35
763	2	FB	0.4176	–5.37
762	2	FA	0.4171	–5.38
761	2	F9	0.4165	–5.39
760	2	F8	0.4160	–5.40
759	2	F7	0.4154	–5.41
758	2	F6	0.4149	–5.42
757	2	F5	0.4143	–5.43
756	2	F4	0.4138	–5.45
755	2	F3	0.4132	–5.46
754	2	F2	0.4127	–5.47
753	2	F1	0.4121	–5.48
752	2	F0	0.4116	–5.49
751	2	EF	0.4110	–5.50
750	2	EE	0.4105	–5.52
749	2	ED	0.4099	–5.53
748	2	EC	0.4094	–5.54
747	2	EB	0.4088	–5.55
746	2	EA	0.4083	–5.56
745	2	E9	0.4077	–5.57
744	2	E8	0.4072	–5.59
743	2	E7	0.4067	–5.60
742	2	E6	0.4061	–5.61
741	2	E5	0.4056	–5.62
740	2	E4	0.4050	–5.63
739	2	E3	0.4045	–5.64
738	2	E2	0.4039	–5.66
737	2	E1	0.4034	–5.67
736	2	E0	0.4028	–5.68
735	2	DF	0.4023	–5.69
734	2	DE	0.4017	–5.70
733	2	DD	0.4012	–5.71
732	2	DC	0.4006	–5.73
731	2	DB	0.4001	–5.74
730	2	DA	0.3995	–5.75
729	2	D9	0.3990	–5.76
728	2	D8	0.3984	–5.77
727	2	D7	0.3979	–5.79
726	2	D6	0.3974	–5.80
725	2	D5	0.3968	–5.81
724	2	D4	0.3963	–5.82
723	2	D3	0.3957	–5.83
722	2	D2	0.3952	–5.85
721	2	D1	0.3946	–5.86
720	2	D0	0.3941	–5.87
719	2	CF	0.3935	–5.88
718	2	CE	0.3930	–5.89
717	2	CD	0.3924	–5.91
716	2	CC	0.3919	–5.92
715	2	CB	0.3913	–5.93
714	2	CA	0.3908	–5.94
713	2	C9	0.3902	–5.95
712	2	C8	0.3897	–5.97
711	2	C7	0.3891	–5.98
710	2	C6	0.3886	–5.99
709	2	C5	0.3880	–6.00
708	2	C4	0.3875	–6.02
707	2	C3	0.3870	–6.03
706	2	C2	0.3864	–6.04
705	2	C1	0.3859	–6.05
704	2	C0	0.3853	–6.07
703	2	BF	0.3848	–6.08
702	2	BE	0.3842	–6.09
701	2	BD	0.3837	–6.10
700	2	BC	0.3831	–6.11
699	2	BB	0.3826	–6.13
698	2	BA	0.3820	–6.14
697	2	B9	0.3815	–6.15
696	2	B8	0.3809	–6.16
695	2	B7	0.3804	–6.18
694	2	B6	0.3798	–6.19
693	2	B5	0.3793	–6.20
692	2	B4	0.3787	–6.21
691	2	B3	0.3782	–6.23
690	2	B2	0.3776	–6.24
689	2	B1	0.3771	–6.25
688	2	B0	0.3766	–6.27
687	2	AF	0.3760	–6.28
686	2	AE	0.3755	–6.29
685	2	AD	0.3749	–6.30
684	2	AC	0.3744	–6.32
683	2	AB	0.3738	–6.33
682	2	AA	0.3733	–6.34
681	2	A9	0.3727	–6.35
680	2	A8	0.3722	–6.37
679	2	A7	0.3716	–6.38
678	2	A6	0.3711	–6.39
677	2	A5	0.3705	–6.41
676	2	A4	0.3700	–6.42
675	2	A3	0.3694	–6.43
674	2	A2	0.3689	–6.44
673	2	A1	0.3683	–6.46
672	2	A0	0.3678	–6.47
671	2	9F	0.3672	–6.48
670	2	9E	0.3667	–6.50
669	2	9D	0.3662	–6.51
668	2	9C	0.3656	–6.52

Table 8-3. Attenuation Coefficients for Tone Generator (continued)

BCD	HEX BR5	HEX BR4	VOLTS RMS	dBm (600Ω)
667	2	9B	0.3651	–6.53
666	2	9A	0.3645	–6.55
665	2	99	0.3640	–6.56
664	2	98	0.3634	–6.57
663	2	97	0.3629	–6.59
662	2	96	0.3623	–6.60
661	2	95	0.3618	–6.61
660	2	94	0.3612	–6.63
659	2	93	0.3607	–6.64
658	2	92	0.3601	–6.65
657	2	91	0.3596	–6.67
656	2	90	0.3590	–6.68
655	2	8F	0.3585	–6.69
654	2	8E	0.3579	–6.71
653	2	8D	0.3574	–6.72
652	2	8C	0.3568	–6.73
651	2	8B	0.3563	–6.75
650	2	8A	0.3558	–6.76
649	2	89	0.3552	–6.77
648	2	88	0.3547	–6.79
647	2	87	0.3541	–6.80
646	2	86	0.3536	–6.81
645	2	85	0.3530	–6.83
644	2	84	0.3525	–6.84
643	2	83	0.3519	–6.85
642	2	82	0.3514	–6.87
641	2	81	0.3508	–6.88
640	2	80	0.3503	–6.89
639	2	7F	0.3497	–6.91
638	2	7E	0.3492	–6.92
637	2	7D	0.3486	–6.93
636	2	7C	0.3481	–6.95
635	2	7B	0.3475	–6.96
634	2	7A	0.3470	–6.97
633	2	79	0.3465	–6.99
632	2	78	0.3459	–7.00
631	2	77	0.3454	–7.02
630	2	76	0.3448	–7.03
629	2	75	0.3443	–7.04
628	2	74	0.3437	–7.06
627	2	73	0.3432	–7.07
626	2	72	0.3426	–7.09
625	2	71	0.3421	–7.10
624	2	70	0.3415	–7.11
623	2	6F	0.3410	–7.13
622	2	6E	0.3404	–7.14
621	2	6D	0.3399	–7.15
620	2	6C	0.3393	–7.17
619	2	6B	0.3388	–7.18
618	2	6A	0.3382	–7.20
617	2	69	0.3377	–7.21
616	2	68	0.3371	–7.23
615	2	67	0.3366	–7.24
614	2	66	0.3361	–7.25
613	2	65	0.3355	–7.27
612	2	64	0.3350	–7.28
611	2	63	0.3344	–7.30
610	2	62	0.3339	–7.31
609	2	61	0.3333	–7.32
608	2	60	0.3328	–7.34
607	2	5F	0.3322	–7.35
606	2	5E	0.3317	–7.37
605	2	5D	0.3311	–7.38
604	2	5C	0.3306	–7.40
603	2	5B	0.3300	–7.41
602	2	5A	0.3295	–7.42
601	2	59	0.3289	–7.44
600	2	58	0.3284	–7.45
599	2	57	0.3278	–7.47
598	2	56	0.3273	–7.48
597	2	55	0.3267	–7.50
596	2	54	0.3262	–7.51
595	2	53	0.3257	–7.53
594	2	52	0.3251	–7.54
593	2	51	0.3246	–7.56
592	2	50	0.3240	–7.57
591	2	4F	0.3235	–7.59
590	2	4E	0.3229	–7.60
589	2	4D	0.3224	–7.61
588	2	4C	0.3218	–7.63
587	2	4B	0.3213	–7.64
586	2	4A	0.3207	–7.66
585	2	49	0.3202	–7.67
584	2	48	0.3196	–7.69
583	2	47	0.3191	–7.70
582	2	46	0.3185	–7.72
581	2	45	0.3180	–7.73
580	2	44	0.3174	–7.75
579	2	43	0.3169	–7.76
578	2	42	0.3163	–7.78
577	2	41	0.3158	–7.79
576	2	40	0.3153	–7.81
575	2	3F	0.3147	–7.82
574	2	3E	0.3142	–7.84
573	2	3D	0.3136	–7.85
572	2	3C	0.3131	–7.87
571	2	3B	0.3125	–7.88
570	2	3A	0.3120	–7.90
569	2	39	0.3114	–7.91
568	2	38	0.3109	–7.93
567	2	37	0.3103	–7.95
566	2	36	0.3098	–7.96
565	2	35	0.3092	–7.98
564	2	34	0.3087	–7.99
563	2	33	0.3081	–8.01
562	2	32	0.3076	–8.02
561	2	31	0.3070	–8.04
560	2	30	0.3065	–8.05
559	2	2F	0.3059	–8.07
558	2	2E	0.3054	–8.08
557	2	2D	0.3049	–8.10
556	2	2C	0.3043	–8.12
555	2	2B	0.3038	–8.13
554	2	2A	0.3032	–8.15
553	2	29	0.3027	–8.16
552	2	28	0.3021	–8.18
551	2	27	0.3016	–8.19
550	2	26	0.3010	–8.21
549	2	25	0.3005	–8.23
548	2	24	0.2999	–8.24
547	2	23	0.2994	–8.26
546	2	22	0.2988	–8.27
545	2	21	0.2983	–8.29
544	2	20	0.2977	–8.30
543	2	1F	0.2972	–8.32
542	2	1E	0.2966	–8.34
541	2	1D	0.2961	–8.35
540	2	1C	0.2955	–8.37
539	2	1B	0.2950	–8.38
538	2	1A	0.2945	–8.40
537	2	19	0.2939	–8.42
536	2	18	0.2934	–8.43
535	2	17	0.2928	–8.45
534	2	16	0.2923	–8.47
533	2	15	0.2917	–8.48
532	2	14	0.2912	–8.50
531	2	13	0.2906	–8.51
530	2	12	0.2901	–8.53

Table 8-3. Attenuation Coefficients for Tone Generator (continued)

BCD	HEX BR5	HEX BR4	VOLTS RMS	dBm (600Ω)
529	2	11	0.2895	–8.55
528	2	10	0.2890	–8.56
527	2	0F	0.2884	–8.58
526	2	0E	0.2879	–8.60
525	2	0D	0.2873	–8.61
524	2	0C	0.2868	–8.63
523	2	0B	0.2862	–8.65
522	2	0A	0.2857	–8.66
521	2	09	0.2852	–8.68
520	2	08	0.2846	–8.70
519	2	07	0.2841	–8.71
518	2	06	0.2835	–8.73
517	2	05	0.2830	–8.75
516	2	04	0.2824	–8.76
515	2	03	0.2819	–8.78
514	2	02	0.2813	–8.80
513	2	01	0.2808	–8.81
512	2	00	0.2802	–8.83
511	1	FF	0.2797	–8.85
510	1	FE	0.2791	–8.87
509	1	FD	0.2786	–8.88
508	1	FC	0.2780	–8.90
507	1	FB	0.2775	–8.92
506	1	FA	0.2769	–8.93
505	1	F9	0.2764	–8.95
504	1	F8	0.2758	–8.97
503	1	F7	0.2753	–8.99
502	1	F6	0.2748	–9.00
501	1	F5	0.2742	–9.02
500	1	F4	0.2737	–9.04
499	1	F3	0.2731	–9.05
498	1	F2	0.2726	–9.07
497	1	F1	0.2720	–9.09
496	1	F0	0.2715	–9.11
495	1	EF	0.2709	–9.12
494	1	EE	0.2704	–9.14
493	1	ED	0.2698	–9.16
492	1	EC	0.2693	–9.18
491	1	EB	0.2687	–9.20
490	1	EA	0.2682	–9.21
489	1	E9	0.2676	–9.23
488	1	E8	0.2671	–9.25
487	1	E7	0.2665	–9.27
486	1	E6	0.2660	–9.28
485	1	E5	0.2654	–9.30
484	1	E4	0.2649	–9.32
483	1	E3	0.2644	–9.34
482	1	E2	0.2638	–9.36
481	1	E1	0.2633	–9.37
480	1	E0	0.2627	–9.39
479	1	DF	0.2622	–9.41
478	1	DE	0.2616	–9.43
477	1	DD	0.2611	–9.45
476	1	DC	0.2605	–9.46
475	1	DB	0.2600	–9.48
474	1	DA	0.2594	–9.50
473	1	D9	0.2589	–9.52
472	1	D8	0.2583	–9.54
471	1	D7	0.2578	–9.56
470	1	D6	0.2572	–9.57
469	1	D5	0.2567	–9.59
468	1	D4	0.2561	–9.61
467	1	D3	0.2556	–9.63
466	1	D2	0.2550	–9.65
465	1	D1	0.2545	–9.67
464	1	D0	0.2540	–9.69
463	1	CF	0.2534	–9.71
462	1	CE	0.2529	–9.72
461	1	CD	0.2523	–9.74
460	1	CC	0.2518	–9.76
459	1	CB	0.2512	–9.78
458	1	CA	0.2507	–9.80
457	1	C9	0.2501	–9.82
456	1	C8	0.2496	–9.84
455	1	C7	0.2490	–9.86
454	1	C6	0.2485	–9.88
453	1	C5	0.2479	–9.89
452	1	C4	0.2474	–9.91
451	1	C3	0.2468	–9.93
450	1	C2	0.2463	–9.95
449	1	C1	0.2457	–9.97
448	1	C0	0.2452	–9.99
447	1	BF	0.2446	–10.01
446	1	BE	0.2441	–10.03
445	1	BD	0.2436	–10.05
444	1	BC	0.2430	–10.07
443	1	BB	0.2425	–10.09
442	1	BA	0.2419	–10.11
441	1	B9	0.2414	–10.13
440	1	B8	0.2408	–10.15
439	1	B7	0.2403	–10.17
438	1	B6	0.2397	–10.19
437	1	B5	0.2392	–10.21
436	1	B4	0.2386	–10.23
435	1	B3	0.2381	–10.25
434	1	B2	0.2375	–10.27
433	1	B1	0.2370	–10.29
432	1	B0	0.2364	–10.31
431	1	AF	0.2359	–10.33
430	1	AE	0.2353	–10.35
429	1	AD	0.2348	–10.37
428	1	AC	0.2343	–10.39
427	1	AB	0.2337	–10.41
426	1	AA	0.2332	–10.43
425	1	A9	0.2326	–10.45
424	1	A8	0.2321	–10.47
423	1	A7	0.2315	–10.49
422	1	A6	0.2310	–10.51
421	1	A5	0.2304	–10.53
420	1	A4	0.2299	–10.55
419	1	A3	0.2293	–10.57
418	1	A2	0.2288	–10.59
417	1	A1	0.2282	–10.61
416	1	A0	0.2277	–10.63
415	1	9F	0.2271	–10.66
414	1	9E	0.2266	–10.68
413	1	9D	0.2260	–10.70
412	1	9C	0.2255	–10.72
411	1	9B	0.2249	–10.74
410	1	9A	0.2244	–10.76
409	1	99	0.2239	–10.78
408	1	98	0.2233	–10.80
407	1	97	0.2228	–10.82
406	1	96	0.2222	–10.85
405	1	95	0.2217	–10.87
404	1	94	0.2211	–10.89
403	1	93	0.2206	–10.91
402	1	92	0.2200	–10.93
401	1	91	0.2195	–10.95
400	1	90	0.2189	–10.98
399	1	8F	0.2184	–11.00
398	1	8E	0.2178	–11.02
397	1	8D	0.2173	–11.04
396	1	8C	0.2167	–11.06
395	1	8B	0.2162	–11.08
394	1	8A	0.2156	–11.11
393	1	89	0.2151	–11.13
392	1	88	0.2145	–11.15

Table 8-3. Attenuation Coefficients for Tone Generator (continued)

BCD	HEX BR5	HEX BR4	VOLTS RMS	dBm (600Ω)
391	1	87	0.2140	–11.17
390	1	86	0.2135	–11.20
389	1	85	0.2129	–11.22
388	1	84	0.2124	–11.24
387	1	83	0.2118	–11.26
386	1	82	0.2113	–11.29
385	1	81	0.2107	–11.31
384	1	80	0.2102	–11.33
383	1	7F	0.2096	–11.35
382	1	7E	0.2091	–11.38
381	1	7D	0.2085	–11.40
380	1	7C	0.2080	–11.42
379	1	7B	0.2074	–11.44
378	1	7A	0.2069	–11.47
377	1	79	0.2063	–11.49
376	1	78	0.2058	–11.51
375	1	77	0.2052	–11.54
374	1	76	0.2047	–11.56
373	1	75	0.2041	–11.58
372	1	74	0.2036	–11.61
371	1	73	0.2031	–11.63
370	1	72	0.2025	–11.65
369	1	71	0.2020	–11.68
368	1	70	0.2014	–11.70
367	1	6F	0.2009	–11.72
366	1	6E	0.2003	–11.75
365	1	6D	0.1998	–11.77
364	1	6C	0.1992	–11.79
363	1	6B	0.1987	–11.82
362	1	6A	0.1981	–11.84
361	1	69	0.1976	–11.87
360	1	68	0.1970	–11.89
359	1	67	0.1965	–11.91
358	1	66	0.1959	–11.94
357	1	65	0.1954	–11.96
356	1	64	0.1948	–11.99
355	1	63	0.1943	–12.01
354	1	62	0.1937	–12.04
353	1	61	0.1932	–12.06
352	1	60	0.1927	–12.09
351	1	5F	0.1921	–12.11
350	1	5E	0.1916	–12.14
349	1	5D	0.1910	–12.16
348	1	5C	0.1905	–12.19
347	1	5B	0.1899	–12.21
346	1	5A	0.1894	–12.24
345	1	59	0.1888	–12.26
344	1	58	0.1883	–12.29
343	1	57	0.1877	–12.31
342	1	56	0.1872	–12.34
341	1	55	0.1866	–12.36
340	1	54	0.1861	–12.39
339	1	53	0.1855	–12.41
338	1	52	0.1850	–12.44
337	1	51	0.1844	–12.46
336	1	50	0.1839	–12.49
335	1	4F	0.1834	–12.52
334	1	4E	0.1828	–12.54
333	1	4D	0.1823	–12.57
332	1	4C	0.1817	–12.59
331	1	4B	0.1812	–12.62
330	1	4A	0.1806	–12.65
329	1	49	0.1801	–12.67
328	1	48	0.1795	–12.70
327	1	47	0.1790	–12.73
326	1	46	0.1784	–12.75
325	1	45	0.1779	–12.78
324	1	44	0.1773	–12.81
323	1	43	0.1768	–12.83
322	1	42	0.1762	–12.86
321	1	41	0.1757	–12.89
320	1	40	0.1751	–12.91
319	1	3F	0.1746	–12.94
318	1	3E	0.1740	–12.97
317	1	3D	0.1735	–13.00
316	1	3C	0.1730	–13.02
315	1	3B	0.1724	–13.05
314	1	3A	0.1719	–13.08
313	1	39	0.1713	–13.11
312	1	38	0.1708	–13.13
311	1	37	0.1702	–13.16
310	1	36	0.1697	–13.19
309	1	35	0.1691	–13.22
308	1	34	0.1686	–13.25
307	1	33	0.1680	–13.27
306	1	32	0.1675	–13.30
305	1	31	0.1669	–13.33
304	1	30	0.1664	–13.36
303	1	2F	0.1658	–13.39
302	1	2E	0.1653	–13.42
301	1	2D	0.1647	–13.45
300	1	2C	0.1642	–13.47
299	1	2B	0.1636	–13.50
298	1	2A	0.1631	–13.53
297	1	29	0.1626	–13.56
296	1	28	0.1620	–13.59
295	1	27	0.1615	–13.62
294	1	26	0.1609	–13.65
293	1	25	0.1604	–13.68
292	1	24	0.1598	–13.71
291	1	23	0.1593	–13.74
290	1	22	0.1587	–13.77
289	1	21	0.1582	–13.80
288	1	20	0.1576	–13.83
287	1	1F	0.1571	–13.86
286	1	1E	0.1565	–13.89
285	1	1D	0.1560	–13.92
284	1	1C	0.1554	–13.95
283	1	1B	0.1549	–13.98
282	1	1A	0.1543	–14.01
281	1	19	0.1538	–14.04
280	1	18	0.1532	–14.07
279	1	17	0.1527	–14.10
278	1	16	0.1522	–14.14
277	1	15	0.1516	–14.17
276	1	14	0.1511	–14.20
275	1	13	0.1505	–14.23
274	1	12	0.1500	–14.26
273	1	11	0.1494	–14.29
272	1	10	0.1489	–14.33
271	1	0F	0.1483	–14.36
270	1	0E	0.1478	–14.39
269	1	0D	0.1472	–14.42
268	1	0C	0.1467	–14.45
267	1	0B	0.1461	–14.49
266	1	0A	0.1456	–14.52
265	1	09	0.1450	–14.55
264	1	08	0.1445	–14.58
263	1	07	0.1439	–14.62
262	1	06	0.1434	–14.65
261	1	05	0.1428	–14.68
260	1	04	0.1423	–14.72
259	1	03	0.1418	–14.75
258	1	02	0.1412	–14.78
257	1	01	0.1407	–14.82
256	1	00	0.1401	–14.85
255	0	FF	0.1396	–14.89
254	0	FE	0.1390	–14.92

Table 8-3. Attenuation Coefficients for Tone Generator (continued)

BCD	HEX BR5	HEX BR4	VOLTS RMS	dBm (600Ω)
253	0	FD	0.1385	–14.95
252	0	FC	0.1379	–14.99
251	0	FB	0.1374	–15.02
250	0	FA	0.1368	–15.06
249	0	F9	0.1363	–15.09
248	0	F8	0.1357	–15.13
247	0	F7	0.1352	–15.16
246	0	F6	0.1346	–15.20
245	0	F5	0.1341	–15.23
244	0	F4	0.1335	–15.27
243	0	F3	0.1330	–15.30
242	0	F2	0.1325	–15.34
241	0	F1	0.1319	–15.38
240	0	F0	0.1314	–15.41
239	0	EF	0.1308	–15.45
238	0	EE	0.1303	–15.49
237	0	ED	0.1297	–15.52
236	0	EC	0.1292	–15.56
235	0	EB	0.1286	–15.60
234	0	EA	0.1281	–15.63
233	0	E9	0.1275	–15.67
232	0	E8	0.1270	–15.71
231	0	E7	0.1264	–15.74
230	0	E6	0.1259	–15.78
229	0	E5	0.1253	–15.82
228	0	E4	0.1248	–15.86
227	0	E3	0.1242	–15.90
226	0	E2	0.1237	–15.93
225	0	E1	0.1231	–15.97
224	0	E0	0.1226	–16.01
223	0	DF	0.1221	–16.05
222	0	DE	0.1215	–16.09
221	0	DD	0.1210	–16.13
220	0	DC	0.1204	–16.17
219	0	DB	0.1199	–16.21
218	0	DA	0.1193	–16.25
217	0	D9	0.1188	–16.29
216	0	D8	0.1182	–16.33
215	0	D7	0.1177	–16.37
214	0	D6	0.1171	–16.41
213	0	D5	0.1166	–16.45
212	0	D4	0.1160	–16.49
211	0	D3	0.1155	–16.53
210	0	D2	0.1149	–16.57
209	0	D1	0.1144	–16.61
208	0	D0	0.1138	–16.66
207	0	CF	0.1133	–16.70
206	0	CE	0.1127	–16.74
205	0	CD	0.1122	–16.78
204	0	CC	0.1117	–16.82
203	0	CB	0.1111	–16.87
202	0	CA	0.1106	–16.91
201	0	C9	0.1100	–16.95
200	0	C8	0.1095	–17.00
199	0	C7	0.1089	–17.04
198	0	C6	0.1084	–17.08
197	0	C5	0.1078	–17.13
196	0	C4	0.1073	–17.17
195	0	C3	0.1067	–17.22
194	0	C2	0.1062	–17.26
193	0	C1	0.1056	–17.31
192	0	C0	0.1051	–17.35
191	0	BF	0.1045	–17.40
190	0	BE	0.1040	–17.44
189	0	BD	0.1034	–17.49
188	0	BC	0.1029	–17.53
187	0	BB	0.1023	–17.58
186	0	BA	0.1018	–17.63
185	0	B9	0.1013	–17.67
184	0	B8	0.1007	–17.72
183	0	B7	0.1002	–17.77
182	0	B6	0.0996	–17.82
181	0	B5	0.0991	–17.86
180	0	B4	0.0985	–17.91
179	0	B3	0.0980	–17.96
178	0	B2	0.0974	–18.01
177	0	B1	0.0969	–18.06
176	0	B0	0.0963	–18.11
175	0	AF	0.0958	–18.16
174	0	AE	0.0952	–18.21
173	0	AD	0.0947	–18.26
172	0	AC	0.0941	–18.31
171	0	AB	0.0936	–18.36
170	0	AA	0.0930	–18.41
169	0	A9	0.0925	–18.46
168	0	A8	0.0919	–18.51
167	0	A7	0.0914	–18.56
166	0	A6	0.0909	–18.61
165	0	A5	0.0903	–18.67
164	0	A4	0.0898	–18.72
163	0	A3	0.0892	–18.77
162	0	A2	0.0887	–18.83
161	0	A1	0.0881	–18.88
160	0	A0	0.0876	–18.93
159	0	9F	0.0870	–18.99
158	0	9E	0.0865	–19.04
157	0	9D	0.0859	–19.10
156	0	9C	0.0854	–19.15
155	0	9B	0.0848	–19.21
154	0	9A	0.0843	–19.27
153	0	99	0.0837	–19.32
152	0	98	0.0832	–19.38
151	0	97	0.0826	–19.44
150	0	96	0.0821	–19.49
149	0	95	0.0815	–19.55
148	0	94	0.0810	–19.61
147	0	93	0.0805	–19.67
146	0	92	0.0799	–19.73
145	0	91	0.0794	–19.79
144	0	90	0.0788	–19.85
143	0	8F	0.0783	–19.91
142	0	8E	0.0777	–19.97
141	0	8D	0.0772	–20.03
140	0	8C	0.0766	–20.09
139	0	8B	0.0761	–20.16
138	0	8A	0.0755	–20.22
137	0	89	0.0750	–20.28
136	0	88	0.0744	–20.35
135	0	87	0.0739	–20.41
134	0	86	0.0733	–20.47
133	0	85	0.0728	–20.54
132	0	84	0.0722	–20.61
131	0	83	0.0717	–20.67
130	0	82	0.0712	–20.74
129	0	81	0.0706	–20.80
128	0	80	0.0701	–20.87
127	0	7F	0.0695	–20.94
126	0	7E	0.0690	–21.01
125	0	7D	0.0684	–21.08
124	0	7C	0.0679	–21.15
123	0	7B	0.0673	–21.22
122	0	7A	0.0668	–21.29
121	0	79	0.0662	–21.36
120	0	78	0.0657	–21.43
119	0	77	0.0651	–21.51
118	0	76	0.0646	–21.58
117	0	75	0.0640	–21.65
116	0	74	0.0635	–21.73

Table 8-3. Attenuation Coefficients for Tone Generator (continued)

BCD	HEX BR5	HEX BR4	VOLTS RMS	dBm (600Ω)
115	0	73	0.0629	–21.80
114	0	72	0.0624	–21.88
113	0	71	0.0618	–21.96
112	0	70	0.0613	–22.03
111	0	6F	0.0608	–22.11
110	0	6E	0.0602	–22.19
109	0	6D	0.0597	–22.27
108	0	6C	0.0591	–22.35
107	0	6B	0.0586	–22.43
106	0	6A	0.0580	–22.51
105	0	69	0.0575	–22.59
104	0	68	0.0569	–22.68
103	0	67	0.0564	–22.76
102	0	66	0.0558	–22.84
101	0	65	0.0553	–22.93
100	0	64	0.0547	–23.02
99	0	63	0.0542	–23.10
98	0	62	0.0536	–23.19
97	0	61	0.0531	–23.28
96	0	60	0.0525	–23.37
95	0	5F	0.0520	–23.46
94	0	5E	0.0514	–23.55
93	0	5D	0.0509	–23.65
92	0	5C	0.0504	–23.74
91	0	5B	0.0498	–23.84
90	0	5A	0.0493	–23.93
89	0	59	0.0487	–24.03
88	0	58	0.0482	–24.13
87	0	57	0.0476	–24.23
86	0	56	0.0471	–24.33
85	0	55	0.0465	–24.43
84	0	54	0.0460	–24.53
83	0	53	0.0454	–24.64
82	0	52	0.0449	–24.74
81	0	51	0.0443	–24.85
80	0	50	0.0438	–24.95
79	0	4F	0.0432	–25.06
78	0	4E	0.0427	–25.17
77	0	4D	0.0421	–25.29
76	0	4C	0.0416	–25.40
75	0	4B	0.0410	–25.52
74	0	4A	0.0405	–25.63
73	0	49	0.0400	–25.75
72	0	48	0.0394	–25.87
71	0	47	0.0389	–25.99
70	0	46	0.0383	–26.11
69	0	45	0.0378	–26.24
68	0	44	0.0372	–26.37
67	0	43	0.0367	–26.50
66	0	42	0.0361	–26.63
65	0	41	0.0356	–26.76
64	0	40	0.0350	–26.89
63	0	3F	0.0345	–27.03
62	0	3E	0.0339	–27.17
61	0	3D	0.0334	–27.31
60	0	3C	0.0328	–27.45
59	0	3B	0.0323	–27.60
58	0	3A	0.0317	–27.75
57	0	39	0.0312	–27.90
56	0	38	0.0306	–28.05
55	0	37	0.0301	–28.21
54	0	36	0.0296	–28.37
53	0	35	0.0290	–28.53
52	0	34	0.0285	–28.70
51	0	33	0.0279	–28.87
50	0	32	0.0274	–29.04
49	0	31	0.0268	–29.21
48	0	30	0.0263	–29.39
47	0	2F	0.0257	–29.57
46	0	2E	0.0252	–29.76
45	0	2D	0.0246	–29.95
44	0	2C	0.0241	–30.15
43	0	2B	0.0235	–30.35
42	0	2A	0.0230	–30.55
41	0	29	0.0224	–30.76
40	0	28	0.0219	–30.98
39	0	27	0.0213	–31.20
38	0	26	0.0208	–31.42
37	0	25	0.0203	–31.65
36	0	24	0.0197	–31.89
35	0	23	0.0192	–32.14
34	0	22	0.0186	–32.39
33	0	21	0.0181	–32.65
32	0	20	0.0175	–32.91
31	0	1F	0.0170	–33.19
30	0	1E	0.0164	–33.47
29	0	1D	0.0159	–33.77
28	0	1C	0.0153	–34.07
27	0	1B	0.0148	–34.39
26	0	1A	0.0142	–34.72
25	0	19	0.0137	–35.06
24	0	18	0.0131	–35.41
23	0	17	0.0126	–35.78
22	0	16	0.0120	–36.17
21	0	15	0.0115	–36.57
20	0	14	0.0109	–37.00
19	0	13	0.0104	–37.44
18	0	12	0.0099	–37.91
17	0	11	0.0093	–38.41
16	0	10	0.0088	–38.93
15	0	0F	0.0082	–39.49
14	0	0E	0.0077	–40.09
13	0	0D	0.0071	–40.74
12	0	0C	0.0066	–41.43
11	0	0B	0.0060	–42.19
10	0	0A	0.0055	–43.02
9	0	09	0.0049	–43.93
8	0	08	0.0044	–44.95
7	0	07	0.0038	–46.11
6	0	06	0.0033	–47.45
5	0	05	0.0027	–49.04
4	0	04	0.0022	–50.98
3	0	03	0.0016	–53.47
2	0	02	0.0011	–57.00
1	0	01	0.0005	–63.02
0	0	00	0.0000	–∞

NOTES

NOTES

NOTES

NOTES

MOTOROLA DISTRIBUTOR AND WORLDWIDE SALES OFFICES

AUTHORIZED NORTH AMERICAN DISTRIBUTORS

UNITED STATES

ALABAMA

Huntsville
Arrow/Schweber Electronics . (205)837-6955
Future Electronics . . . . . (205)830-2322
Hall-Mark Electronics . . . . . (205)837-8700
Hall-Mark Electronics . . . . . (205)837-8700
Newark . . . . . (205)837-9091
Time Electronics . . . . . (205)721-1133

Arizona

Chandler
Hamilton/Avnet Electronics . . (602)961-0836
Phoenix
Future Electronics . . . . . (602)968-7140
Hall-Mark Electronics . . . . . (602)437-1200
Newark Electronics . . . . . (602)864-9905
Wyle Laboratories . . . . . (602)437-2088
Tempe
Arrow/Schweber Electronics . (602)431-0030
Time Electronics . . . . . (602)967-2000

CALIFORNIA

Agoura Hills
Time Electronics Corporate . . (818)707-2890
Belmont
Richardson Electronics . . . . (415)592-9225
Calabassas
Arrow/Schweber Electronics . (818)880-9686
Wyle Laboratories . . . . . (818)880-9000
Chatsworth
Future Electronics . . . . . (818)772-6240
Hall-Mark Electronics . . . . . (818)773-4500
Time Electronics . . . . . (818)998-7200
Costa Mesa
Hamilton/Avnet Electronics . . (714)754-6092
Culver City
Hamilton/Avnet Corporate . . (213)558-2000
Gardena
Hamilton/Avnet Electronics . . (213)516-6498
Irvine
Arrow/Schweber Electronics (714)587-0404
Future Electronics . . . . . (714)250-4141
Hall-Mark Electronics . . . . . (714)727-6000
Wyle Laboratories Corporate . (714)753-9953
Wyle Laboratories . . . . . (714)863-9953
Mountain View
Richardson Electronics . . . . (415)960-6900
Orange
Newark . . . . . (714)634-8224
Rocklin
Hall-Mark Electronics . . . . . (916)624-9781
Sacramento
Hamilton/Avnet Electronics . . (916)925-2216
Newark . . . . . (916)721-1633
Wyle Laboratories . . . . . (916)638-5282
San Diego
Arrow/Schweber Electronics (619)565-4800
Future Electronics . . . . . (619)278-5020
Hall-Mark Electronics . . . . . (619)268-1201
Hamilton/Avnet Electronics . . (619)571-8730
Newark . . . . . (619)569-9877
Wyle Laboratories . . . . . (619)565-9171
San Francisco
Newark . . . . . (415)571-5300
San Jose
Arrow/Schweber Electronics . (408)441-9700
Arrow/Schweber Electronics . (408)428-6400
Future Electronics . . . . . (408)434-1122
Hall-Mark Electronics . . . . . (408)432-4000
Santa Clara
Wyle Laboratories . . . . . (408)727-2500
Sunnyvale
Hamilton/Avnet Electronics . . (408)743-3300
Time Electronics . . . . . (408)734-9888
Torrance
Time Electronics . . . . . (310)320-0880
Tustin
Time Electronics . . . . . (714)669-0100
West Hills
Newark . . . . . (818)888-3718
Woodland Hills
Hamilton/Avnet Electronics . . (818)594-0404
Richardson Electronics . . . . (615)594-5600

COLORADO

Broomfield
Future Electronics . . . . . (303)421-0123
Colorado Springs
Newark . . . . . (719)592-9494
Denver
Newark . . . . . (303)757-3351
Englewood
Arrow/Schweber Electronics . (303)799-0258
Hall-Mark Electronics . . . . . (303)790-1662
Hamilton/Avnet Electronics . . (303)740-1000
Time Electronics . . . . . (303)721-8882
Thornton
Wyle Laboratories . . . . . (303)457-9953

CONNECTICUT

Bethel
Future Electronics . . . . . (203)743-9594
Cheshire
Hall-Mark Electronics . . . . . (203)271-2844
Danbury
Hamilton/Avnet Electronics . . (203)743-6077
Southbury
Time Electronics . . . . . (203)271-3200
Wallingfort
Arrow/Schweber Electronics . (203)265-7741
Windsor
Newark . . . . . (203)683-8860

FLORIDA

Altamonte Springs
Future Electronics . . . . . (407)767-8414
Casselberry
Hall-Mark Electronics . . . . . (407)830-5855
Clearwater
Future Electronics . . . . . (813)530-1222
Hall-Mark Electronics . . . . . (813)541-7440
Deerfield Beach
Arrow/Schweber Electronics . (305)429-8200
Ft. Lauderdale
Hamilton/Avnet Electronics . . (305)767-6377
Time Electronics . . . . . (305)484-1778
Lake Mary
Arrow/Schweber Electronics . (407)333-9300
Orlando
Hamilton/Avnet Electronics . . (407)628-3888
Newark . . . . . (407)896-8350
Time Electronics . . . . . (407)841-6565
Plantation
Newark . . . . . (305)424-4400
Pompano Beach
Hall-Mark Electronics . . . . . (305)971-9280
Tampa/St. Petersburg
Hamilton/Avnet Electronics . . (813)573-3930
Newark . . . . . (813)287-1578
Time Electronics . . . . . (407)841-6565
Winter Park
Richardson Electronics . . . . (407)644-1453

GEORGIA

Atlanta
Time Electronics . . . . . (404)351-3545
Duluth
Arrow/Schweber Electronics . (404)497-1300
Hall-Mark Electronics . . . . . (404)623-4400
Hamilton/Avnet Electronics . . . (404)446-0611
Norcross
Future Electronics . . . . . (404)441-7676
Newark . . . . . (404)448-1300
Time Electronics . . . . . (404)368-0969

ILLINOIS

Bensenville
Hamilton/Avnet Electronics . . (708)860-7700
Chicago
Newark Electronics Corp. . . (312)784-5100
Hoffman Estates
Future Electronics . . . . . (708)882-1255
Itasca
Arrow/Schweber Electronics (708)250-0500
LaFox
Richardson Electronics . . . . (708)208-2401
Schaumburg
Newark . . . . . (708)310-8980
Time Electronics . . . . . (708)303-3000
Wooddale
Hall-Mark Electronics . . . . . (708)860-3800

INDIANA

Indianapolis
Arrow/Schweber Electronics . (317)299-2071
Hall-Mark Electronics . . . . . (317)872-8875
Hamilton/Avnet Electronics . . (317)844-9333
Newark . . . . . (317)259-0085
Time Electronics . . . . . (708)303-3000
Ft. Wayne
Newark . . . . . (219)484-0766

IOWA

Cedar Rapids
Hamilton/Avnet Electronics . . (319)362-4757
Newark . . . . . (319)393-3800
Time Electronics . . . . . (314)391-6444

KANSAS

Lenexa
Arrow/Schweber Electronics . (913)541-9542
Hall-Mark Electronics . . . . . (913)888-4747
Overland Park
Hamilton/Avnet Electronics . . (913)888-8900
Newark . . . . . (913)677-0727
Time Electronics . . . . . (314)391-6444

MARYLAND

Beltsville
Newark . . . . . (301)604-1700
Columbia
Arrow/Schweber Electronics . (301)596-7800
Future Electronics . . . . . (301)290-0600
Hall-Mark Electronics . . . . . (301)988-9800
Hamilton/Avnet Electronics . . (301)995-3500
Time Electronics . . . . . (301)964-3090

MASSACHUSETTS

Billerica
Hall-Mark Electronics . . . . . (508)667-0902
Boston
Arrow/Schweber Electronics . (508)658-0900
Hamilton/Avnet Electronics . . (508)531-7430
Bolton
Future Corporate . . . . . (508)779-3000
Burlington
Wyle Laboratories . . . . . (617)272-7300
Methuen
Newark . . . . . (508)683-0913
Norwell
Richardson Electronics . . . . (617)871-5162
Peabody
Time Electronics . . . . . (508)532-9900

AUTHORIZED DISTRIBUTORS – continued

UNITED STATES – continued

MICHIGAN

Detroit
Newark . . . . . (313)967-0600

Grand Rapids
Hamilton/Avnet Electronics . . (616)243-8805

Livonia
Arrow/Schweber Electronics . (313)462-2290
Future Electronics . . . . . (313)261-5270
Hall-Mark Electronics . . . . . (313)462-1205
Hamilton/Avnet Electronics . . (313)347-4270
Time Electronics . . . . . (614)794-3301

MINNESOTA

Eden Prairie
Arrow/Schweber Electronics . (612)941-5280
Future Electronics . . . . . (612)944-2200
Hall-Mark Electronics . . . . . (612)881-2600
Time Electronics . . . . . (612)943-2433

Minneapolis
Hamilton/Avnet Electronics . . (612)932-0600
Newark . . . . . (612)331-6350

MISSOURI

Earth City
Hall-Mark Electronics . . . . . (314)291-5350
Hamilton/Avnet Electronics . . (314)537-1600

St. Louis
Arrow/Schweber Electronics . (314)567-6888
Future Electronics . . . . . (314)469-6805
Newark . . . . . (314)298-2505
Time Electronics . . . . . (314)391-6444

NEW HAMPSHIRE

Manchester
Hamilton/Avnet Electronics . . (603)624-9400

NEW JERSEY

Cherry Hill
Hamilton/Avnet Electronics . . (609)424-0100

Fairfield
Future Electronics . . . . . (201)299-0400
Newark . . . . . (201)882-0300

Marlton
Arrow/Schweber Electronics . (609)596-8000
Future Electronics . . . . . (609)778-7600

Mount Laurel
Hall-Mark Electronics . . . . . (609)235-1900

Pinebrook
Arrow/Schweber Electronics . (201)227-7880

Parsippany
Hall-Mark Electronics . . . . . (201)515-3000
Hamilton/Avnet Electronics . . (201)575-3390

Wayne
Time Electronics . . . . . (201)785-8250

NEW MEXICO

Albuquerque
Alliance Electronics . . . . . (505)292-3360
Hamilton/Avnet Electronics . . (505)345-0001
Newark . . . . . (505)828-1878

NEW YORK

Commack
Newark . . . . . (516)499-1216

Fairport
Hall-Mark Electronics . . . . . (716)425-3300

Hauppauge
Arrow/Schweber Electronics . (516)231-1000
Future Electronics . . . . . (516)234-4000
Hall-Mark Electronics . . . . . (516)737-0600
Hamilton/Avnet Electronics . . (516)231-9800

Liverpool
Future Electronics . . . . . (315)451-2371

Pittsford
Newark . . . . . (716)381-4244

Rochester
Arrow/Schweber Electronics . (716)427-0300
Future Electronics . . . . . (716)272-1120
Hall-Mark Electronics . . . . . (716)425-3300
Hamilton/Avnet Electronics . . (716)292-0730
Richardson Electronics . . . . . (716)264-1100
Time Electronics . . . . . (315)432-0355

Rockville Centre
Richardson Electronics . . . . (516)872-4400

Syracuse
Hamilton/Avnet Electronics . . (315)437-2641
Time Electronics . . . . . (315)432-0355

NORTH CAROLINA

Charlotte
Future Electronics . . . . . (704)455-9030
Richardson Electronics . . . . (704)548-9042

Greensboro
Newark . . . . . (919)292-7240

Raleigh
Arrow/Schweber Electronics . (919)876-3132
Future Electronics . . . . . (919)790-7111
Hall-Mark Electronics . . . . . (919)872-0712
Hamilton/Avnet Electronics . . (919)878-0810
Time Electronics . . . . . (919)693-5166

OHIO

Centerville
Arrow/Schweber Electronics . (513)435-5563

Cleveland
Hall-Mark Electronics . . . . . (216)349-4632
Hamilton/Avnet Electronics . . (216)349-5100
Newark . . . . . (216)391-9330
Time Electronics . . . . . (614)794-3301

Columbus
Hamilton/Avnet Electronics . . (614)882-7004
Newark . . . . . (614)431-0809
Time Electronics . . . . . (614)794-3301

Dayton
Hamilton/Avnet Electronics . . (513)439-6700
Newark . . . . . (513)294-8980
Time Electronics . . . . . (614)794-3301

Mayfield Heights
Future Electronics . . . . . (216)449-6996

Solon
Arrow/Schweber Electronics . (216)248-3990

Toledo
Hamilton/Avnet Electronics . . (419)242-6610

Worthington
Hall-Mark Electronics . . . . . (614)888-3313

OKLAHOMA

Tulsa
Hall-Mark Electronics . . . . . (918)254-6110
Hamilton/Avnet Electronics . . (918)252-7297
Newark . . . . . (918)252-5070

OREGON

Beaverton
Arrow/Almac Electronics Corp. (503)629-8090
Future Electronics . . . . . (503)645-9454
Wyle Laboratories . . . . . (503)643-7900

Portland
Hamilton/Avnet Electronics . . (503)627-0201
Newark . . . . . (503)297-1984
Time Electronics . . . . . (503)626-2979

PENNSYLVANIA

Erie
Hamilton/Avnet Electronics . . (814)455-6767

King of Prussia
Newark . . . . . (215)265-0933

Montgomeryville
Richardson Electronics . . . . (215)628-0805

Philadelphia
Hall-Mark Electronics . . . . . (215)355-7300
Time Electronics . . . . . (609)596-6700

Pittsburgh
Arrow/Schweber Electronics . (412)963-6807
Hamilton/Avnet Electronics . . (412)281-4150
Newark . . . . . (412)788-4790
Time Electronics . . . . . (614)794-3301

TENNESSEE

Franklin
Richardson Electronics . . . . (615)791-4900

Knoxville
Newark . . . . . (615)588-6493

TEXAS

Austin
Arrow/Schweber Electronics . (512)835-4180
Hall-Mark Electronics . . . . . (512)258-8848
Hamilton/Avnet Electronics . . (512)832-4306
Newark . . . . . (512)338-0287
Time Electronics . . . . . (512)346-7346
Wyle Laboratories . . . . . (512)345-8853

Carollton
Arrow/Schweber Electronics . (214)380-6464

Dallas
Future Electronics . . . . . (214)437-2437
Hall-Mark Corporate . . . . . (214)343-5000
Hall-Mark Electronics . . . . . (214)553-4300
Hamilton/Avnet Electronics . . (214)308-8140
Richardson Electronics . . . . (214)239-3680
Time Electronics . . . . . (214)644-4644
Wyle Laboratories . . . . . (214)235-9953

Ft. Worth
Allied Electronics . . . . . (817)336-5401

Houston
Arrow/Schweber Electronics . (713)530-4700
Future Electronics . . . . . (713)556-8696
Hall-Mark Electronics . . . . . (713)781-6100
Hamilton/Avnet Electronics . . (713)240-7898
Newark . . . . . (713)270-4800
Time Electronics . . . . . (713)530-0800
Wyle Laboratories . . . . . (713)879-9953

Richardson
Newark . . . . . (214)235-1998

UTAH

Salt Lake City
Arrow/Schweber Electronics . (801)973-6913
Future Electronics . . . . . (801)972-8489
Hamilton/Avnet Electronics . . (801)972-2800
Newark . . . . . (801)261-5660

West Valley City
Hall-Mark Electronics . . . . . (801)972-1008
Time Electronics . . . . . (801)973-8494
Wyle Laboratories . . . . . (801)974-9953

WASHINGTON

Bellevue
Almac Electronics Corp. . . . (206)643-9992
Future Electronics . . . . . (206)881-8199
Hall-Mark Electronics . . . . . (206)547-0415
Newark . . . . . (206)641-9800
Richardson Electronics . . . . (206)646-7224

Redmond
Hamilton/Avnet Electronics . . (206)241-8555
Time Electronics . . . . . (206)820-1525
Wyle Laboratories . . . . . (206)881-1150

Spokane
Arrow/Almac Electronics Corp. (509)924-9500

WISCONSIN

Brookfield
Arrow/Schweber Electronics . (414)792-0150

Milwaukee
Time Electronics . . . . . (708)303-3000

New Berlin
Hall-Mark Electronics . . . . . (414)797-7844
Hamilton/Avnet Electronics . . (414)784-4510

Waukesha
Future Electronics . . . . . (414)786-1884

Wauwatosa
Newark . . . . . (414)453-9100

AUTHORIZED DISTRIBUTORS – continued

CANADA

ALBERTA

Calgary
- Electro Sonic Inc. . . . . (403)255-9550
- Future Electronics . . . . . (403)250-5550
- Hamilton/Avnet Electronics . . (800)663-5500

Edmonton
- Future Electronics . . . . . (403)438-2858
- Hamilton/Avnet Electronics . (800)663-5500

BRITISH COLUMBIA

Vancouver
- Arrow Electronics . . . . . (604)421-2333
- Electro Sonic Inc. . . . . (604)273-2911
- Future Electronics . . . . . (604)294-1166
- Hamilton/Avnet Electronics . . (604)420-4101
- Newark . . . . . (800)463-9275

MANITOBA

Winnipeg
- Electro Sonic Inc. . . . . (204)783-3105
- Future Electronics . . . . . (204)786-7711
- Hamilton/Avnet Electronics . . (800)663-5500

ONTARIO

Ottawa
- Arrow Electronics . . . . . (613)226-6903
- Electro Sonic Inc. . . . . (613)728-8333
- Future Electronics . . . . . (613)820-8313
- Hamilton/Avnet Electronics . . (613)226-1700

Toronto
- Arrow Electronics . . . . . (416)670-7769
- Electro Sonic Inc. . . . . (416)494-1666
- Future Electronics . . . . . (416)612-9200
- Hamilton/Avnet Electronics . . (416)564-6060
- Newark . . . . . (800)463-9275
- Richardson Electronics . . . . (800)348-5530

QUEBEC

Montreal
- Arrow Electronics . . . . . (514)421-7411
- Future Electronics . . . . . (514)694-7710
- Hamilton/Avnet Electronics . . (514)335-1000
- Newark . . . . . (800)463-9275
- Richardson Electronics . . . . (800)348-5530

Quebec City
- Future Electronics . . . . . (418)877-6666

SALES OFFICES

UNITED STATES

ALABAMA, Huntsville . . . . . (205)464-6800
ARIZONA, Tempe . . . . . (602)897-5056
CALIFORNIA, Agoura Hills . . . . (818)706-1929
CALIFORNIA, Los Angeles . . . . (310)417-8848
CALIFORNIA, Irvine . . . . . (714)753-7360
CALIFORNIA, Roseville . . . . . (916)922-7152
CALIFORNIA, San Diego . . . . . (619)541-2163
CALIFORNIA, Sunnyvale . . . . . (408)749-0510
COLORADO, Colorado Springs . (719)599-7497
COLORADO, Denver . . . . . (303)337-3434
CONNECTICUT, Wallingford . . . (203)949-4100
FLORIDA, Maitland . . . . . (407)628-2636
FLORIDA, Pompano Beach/
Ft. Lauderdale . . . . . (305)486-9776
FLORIDA, Clearwater . . . . . (813)538-7750
GEORGIA, Atlanta . . . . . (404)729-7100
IDAHO, Boise . . . . . (208)323-9413
ILLINOIS, Chicago/
Hoffman Estates . . . . . (708)490-9500
INDIANA, Fort Wayne . . . . . (219)436-5818
INDIANA, Indianapolis . . . . . (317)571-0400
INDIANA, Kokomo . . . . . (317)457-6634
IOWA, Cedar Rapids . . . . . (319)373-1328
KANSAS, Kansas City/Mission . (913)451-8555
MARYLAND, Columbia . . . . . (410)381-1570
MASSACHUSETTS, Marlborough (508)481-8100
MASSACHUSETTS, Woburn . . (617)932-9700
MICHIGAN, Detroit . . . . . (313)347-6800
MINNESOTA, Minnetonka . . . . . (612)932-1500
MISSOURI, St. Louis . . . . . (314)275-7380
NEW JERSEY, Fairfield . . . . . (201)808-2400
NEW YORK, Fairport . . . . . (716)425-4000
NEW YORK, Hauppauge . . . . . (516)361-7000
NEW YORK, Poughkeepsie/
Fishkill . . . . . (914)896-0511
NORTH CAROLINA, Raleigh . . (919)870-4355
OHIO, Cleveland . . . . . (216)349-3100
OHIO, Columbus/Worthington . . (614)431-8492
OHIO, Dayton . . . . . (513)495-6800
OKLAHOMA, Tulsa . . . . . (800)544-9496
OREGON, Portland . . . . . (503)641-3681
PENNSYLVANIA, Colmar . . . . . (215)997-1020
Philadelphia/Horsham . . . . . (215)957-4100
TENNESSEE, Knoxville . . . . . (615)690-5593
TEXAS, Austin . . . . . (512)873-2000
TEXAS, Houston . . . . . (800)343-2692
TEXAS, Plano . . . . . (214)516-5100
VIRGINIA, Richmond . . . . . (804)285-2100
WASHINGTON, Bellevue . . . . . (206)454-4160
Seattle Access . . . . . (206)622-9960
WISCONSIN, Milwaukee/
Brookfield . . . . . (414)792-0122

Field Applications Engineering Available
Through All Sales Offices

CANADA

BRITISH COLUMBIA, Vancouver . (604)293-7650
ONTARIO, Toronto . . . . . (416)497-8181
ONTARIO, Ottawa . . . . . (613)226-3491
QUEBEC, Montreal . . . . . (514)731-6881

INTERNATIONAL

AUSTRALIA, Melbourne . . . . . (61-3)887-0711
AUSTRALIA, Sydney . . . . . 61(2)906-3855
BRAZIL, Sao Paulo . . . . . 55(11)815-4200
CHINA, Beijing 86-505-2180
FINLAND, Helsinki 358-0-351 61191
car phone . . . . . 358(49)211501
FRANCE, Paris/Vanves . . . . . 33(1)40 955 900
GERMANY, Langenhagen/
Hannover . . . . . 49(511)789911
GERMANY, Munich 49 89 92103-0
GERMANY, Nurenberg 49 911 64-3044
GERMANY, Sindelfingen 49 7031 69 910
GERMANY, Wiesbaden 49 611 761921
HONG KONG, Kwai Fong 852-4808333
Tai Po 852-6668333
INDIA, Bangalore . . . . . (91-812)627094
ISRAEL, Tel Aviv . . . . . 972(3)753-8222
ITALY, Milan . . . . . 39(2)82201
JAPAN, Aizu . . . . . 81(241)272231
JAPAN, Atsugi . . . . . 81(0462)23-0761
JAPAN, Kumagaya . . . . . 81(0485)26-2600
JAPAN, Kyushu . . . . . 81(092)771-4212
JAPAN, Mito . . . . . 81(0292)26-2340
JAPAN, Nagoya . . . . . 81(052)232-1621
JAPAN, Osaka . . . . . 81(06)305-1801
JAPAN, Sendai . . . . . 81(22)268-4333
JAPAN, Tachikawa . . . . . 81(0425)23-6700
JAPAN, Tokyo . . . . . 81(03)3440-3311
JAPAN, Yokohama . . . . . 81(045)472-2751
KOREA, Pusan . . . . . 82(51)4635-035
KOREA, Seoul . . . . . 82(2)554-5118
MALAYSIA, Penang . . . . . 60(4)374514
MEXICO, Mexico City . . . . . 52(5)282-2864
MEXICO, Guadalajara . . . . . 52(36)21-8977
Marketing . . . . . 52(36)21-9023
Customer Service . . . . . 52(36)669-9160
NETHERLANDS, Best . . . . . (31)4998 612 11
PUERTO RICO, San Juan . . . . . (809)793-2170
SINGAPORE . . . . . (65)2945438
SPAIN, Madrid . . . . . 34(1)457-8204
or . . . . . 34(1)457-8254
SWEDEN, Solna . . . . . 46(8)734-8800
SWITZERLAND, Geneva . . . . . 41(22)799 11 11
SWITZERLAND, Zurich . . . . . 41(1)730-4074
TAIWAN, Taipei . . . . . 886(2)717-7089
THAILAND, Bangkok . . . . . (66-2)254-4910
UNITED KINGDOM, Aylesbury . . 44(296)395-252

FULL LINE REPRESENTATIVES

CALIFORNIA, Loomis
Galena Technology Group . . . (916)652-0268
COLORADO, Grand Junction
Cheryl Lee Whitely . . . . . (303)243-9658
KANSAS, Wichita
Melinda Shores/Kelly Greiving . (316)838-0190
NEVADA, Reno
Galena Technology Group . . . (702)746-0642
NEW MEXICO, Albuquerque
S&S Technologies, Inc. . . . . (505)298-7177
UTAH, Salt Lake City
Utah Component Sales, inc. . . (801)561-5099
WASHINGTON, Spokane
Doug Kenley . . . . . (509)924-2322
ARGENTINA, Buenos Aires
Argonics, S.A. . . . . (541)343-1787

HYBRID/MCM COMPONENT SUPPLIERS

Chip Supply . . . . . (407)298-7100
Elmo Semiconductor . . . . . (818)768-7400
Minco Technology Labs Inc. . . . (512)834-2022
Semi Dice Inc. . . . . (310)594-4631

This page intentionally left blank.

This page intentionally left blank.

Motorola reserves the right to make changes without further notice to any products herein. Motorola makes no warranty, representation or guarantee regarding the suitability of its products for any particular purpose, nor does Motorola assume any liability arising out of the application or use of any product or circuit, and specifically disclaims any and all liability, including without limitation consequential or incidental damages. “Typical” parameters which may be provided in Motorola data sheets and/or specifications can and do vary in different applications and actual performance may vary over time. All operating parameters, including “Typicals” must be validated for each customer application by customer’s technical experts. Motorola does not convey any license under its patent rights nor the rights of others. Motorola products are not designed, intended, or authorized for use as components in systems intended for surgical implant into the body, or other applications intended to support or sustain life, or for any other application in which the failure of the Motorola product could create a situation where personal injury or death may occur. Should Buyer purchase or use Motorola products for any such unintended or unauthorized application, Buyer shall indemnify and hold Motorola and its officers, employees, subsidiaries, affiliates, and distributors harmless against all claims, costs, damages, and expenses, and reasonable attorney fees arising out of, directly or indirectly, any claim of personal injury or death associated with such unintended or unauthorized use, even if such claim alleges that Motorola was negligent regarding the design or manufacture of the part. Motorola and Ⓜ are registered trademarks of Motorola, Inc. Motorola, Inc. is an Equal Opportunity/Affirmative Action Employer.

Mfax is a trademark of Motorola, Inc.

How to reach us:

USA / EUROPE / Locations Not Listed: Motorola Literature Distribution;
P.O. Box 5405, Denver, Colorado 80217. 1–303–675–2140 or 1–800–441–2447

Mfax™: RMFAX0@email.sps.mot.com – TOUCHTONE 1–602–244–6609
Motorola Fax Back System – US & Canada ONLY 1–800–774–1848
– http://sps.motorola.com/mfax/

HOME PAGE: http://motorola.com/sps/

JAPAN: Nippon Motorola Ltd.: SPD, Strategic Planning Office, 141,
4–32–1 Nishi–Gotanda, Shagawa–ku, Tokyo, Japan. 03–5487–8488

ASIA / PACIFIC: Motorola Semiconductors H.K. Ltd.; 8B Tai Ping Industrial Park,
51 Ting Kok Road, Tai Po, N.T., Hong Kong. 852–26629298

CUSTOMER FOCUS CENTER: 1–800–521–6274