MC12080

1.1 GHz Prescaler



ON Semiconductor®

http://onsemi.com

Description

The MC12080 is a single modulus divide by 10, 20, 40, 80 prescaler for low power frequency division of a 1.1 GHz high frequency input signal. Divide ratio control inputs SW1, SW2 and SW3 select the required divide ratio of ÷10, ÷20, ÷40, or ÷80.

An external load resistor is required to terminate the output. An 820 Ω resistor is recommended to achieve a 1.2 V_{pp} output swing, when dividing a 1.1 GHz input signal by the minimum divide by ratio of 10, assuming a 8.0 pF load. Output current can be minimized dependent on conditions such as output frequency, capacitive load being driven, and output voltage swing required. Typical values for load resistors are included in the V_{out} specification for various divide ratios at 1.1 GHz input frequency.

Features

- 1.1 GHz Toggle Frequency
- Supply Voltage 4.5 to 5.5 V
- Low Power 3.7 mA Typical at V_{CC} = 5.0 V
- Operating Temperature Range of −40 to 85°C
- These Devices are Pb−Free and are RoHS Compliant

Table 1. MAXIMUM RATINGS

Rating	Symbol	Value	Unit
Power Supply Voltage, Pin 2	V_{CC}	−0.5 to 7.0	Vdc
Operating Temperature Range	T_A	−40 to 85	°C
Storage Temperature Range	T_{stg}	−65 to 150	°C
Maximum Output Current, Pin 4	I_O	10	mA

Stresses exceeding Maximum Ratings may damage the device. Maximum Ratings are stress ratings only. Functional operation above the Recommended Operating Conditions is not implied. Extended exposure to stresses above the Recommended Operating Conditions may affect device reliability.

Table 2. ATTRIBUTES

Characteristics		Value
ESD Protection	Human Body Model Machine Model	> 1500 V > 100 V
Moisture Sensitivity, Indefinite Time Out of Drypack (Note 1)		Level 1
Flammability Rating	Oxygen Index: 28 to 34	UL 94 V−0 @ 0.125 in
Meets or exceeds JEDEC Spec EIA/JESD78 IC Latchup Test		

1. For additional information, see Application Note AND8003/D.

MARKING DIAGRAM



SOIC−8
D SUFFIX
CASE 751

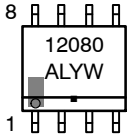

A = Assembly Location
L = Wafer Lot
Y = Year
W = Work Week
▪ = Pb−Free Package

PIN CONNECTIONS

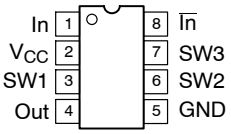

(Top View)

FUNCTION TABLE

SW1	SW2	SW3	Divide Ratio
L	L	L	80
L	L	H	40
L	H	L	40
L	H	H	20
H	L	L	40
H	L	H	20
H	H	L	20
H	H	H	10

NOTE: SW1, SW2 and SW3: H = V_{CC}, L = Open.

ORDERING INFORMATION

See detailed ordering and shipping information in the package dimensions section on page 3 of this data sheet.

© Semiconductor Components Industries, LLC, 2013

Table 3. ELECTRICAL CHARACTERISTICS (V_{CC} = 4.5 to 5.5 V; T_A = −40 to 85°C, unless otherwise noted.)

Characteristic	Symbol	Min	Typ	Max	Unit
Toggle Frequency (Sine Wave)	ft	0.1	1.4	1.1	GHz
Supply Current Output (Pin 2)	I_{CC}	–	3.7	5.0	mA
Input Voltage Sensitivity 100 to 250 MHz 250 to 1100 MHz	V_{in}	 400 100	 – –	 1000 1000	mVpp
Divide Ratio Control Input High (SW1, SW2, SW3)	V_{IH}	V_{CC} – 0.5 V	V_{CC}	V_{CC} + 0.5 V	V
Divide Ratio Control Input Low (SW1, SW2, SW3)	V_{IL}	Open	Open	Open	–
Output Voltage Swing (Note 1) R_L = 820 Ω, I_O = 4.0 mA for ÷10 R_L = 1.6 kΩ, I_O = 2.1 mA for ÷20 R_L = 3.3 kΩ, I_O = 1.1 mA for ÷40 R_L = 6.2 kΩ, I_O = 0.57 mA for ÷80	V_{out}	0.8	1.2	–	V_{pp}

1. Assumes 8.0 pF load and 1.1 GHz input frequency (typical), I_O at V_{CC} = 5.0 V and T_A = 25°C.

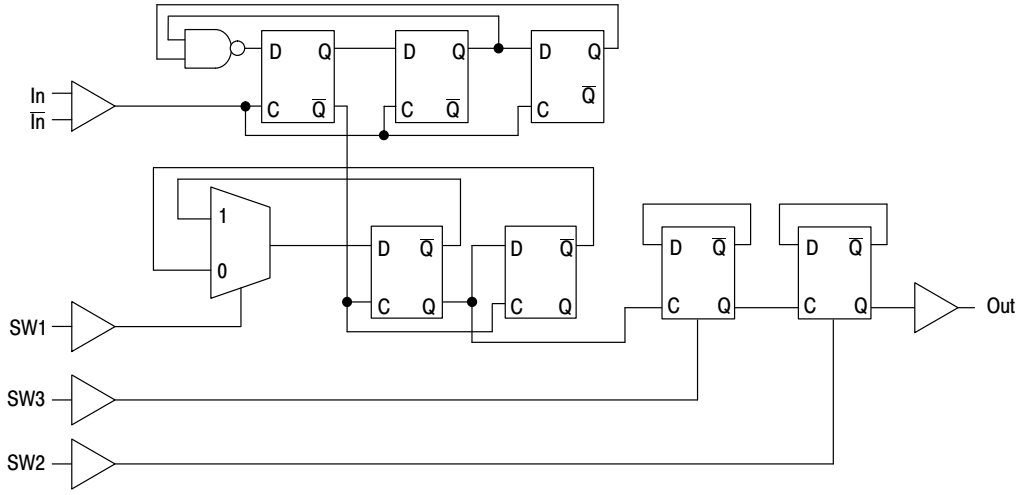

Figure 1. Logic Diagram

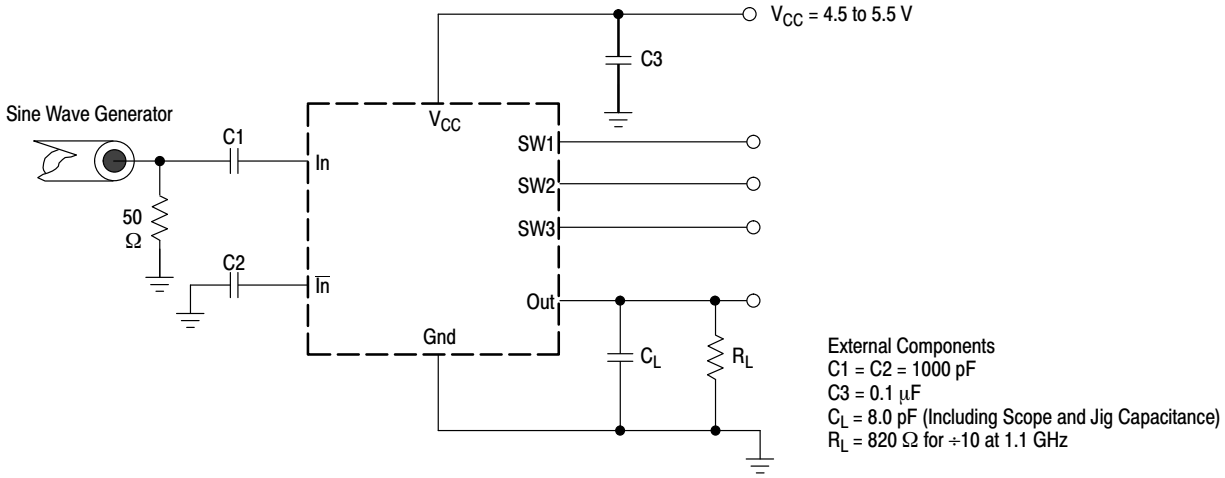

Figure 2. AC Test Circuit

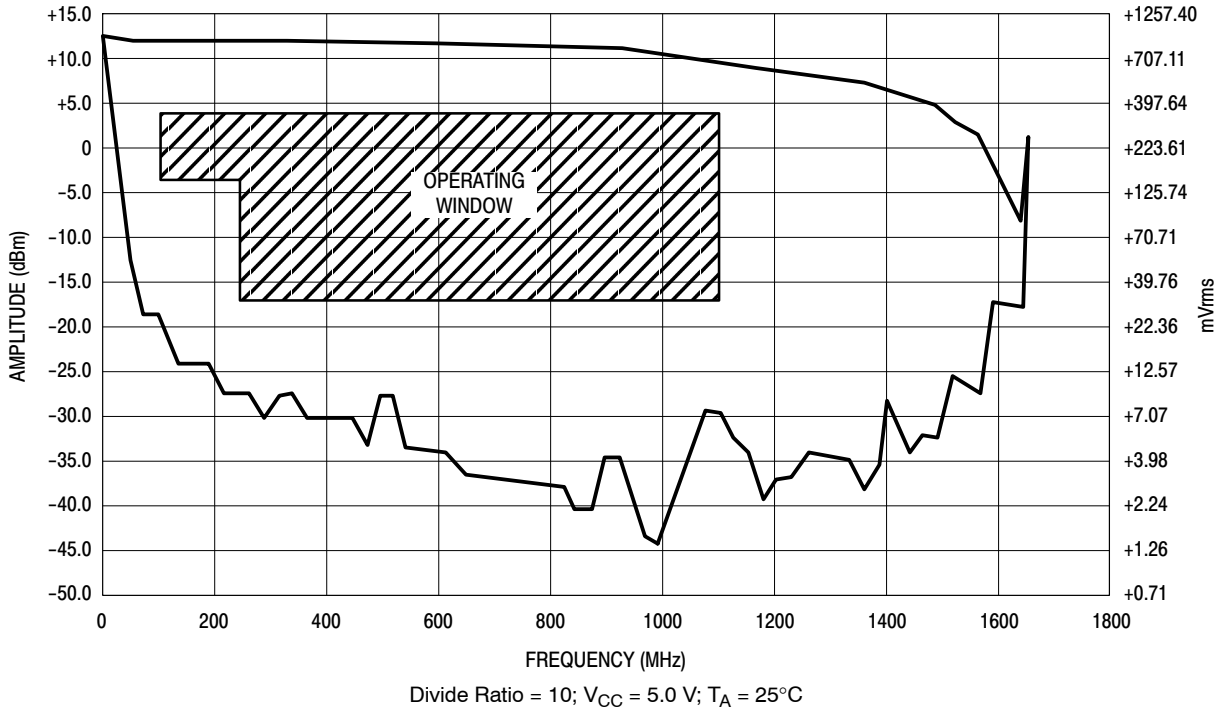

Divide Ratio = 10; V_{CC} = 5.0 V; T_A = 25°C

Figure 3. Input Signal Amplitude versus Input Frequency

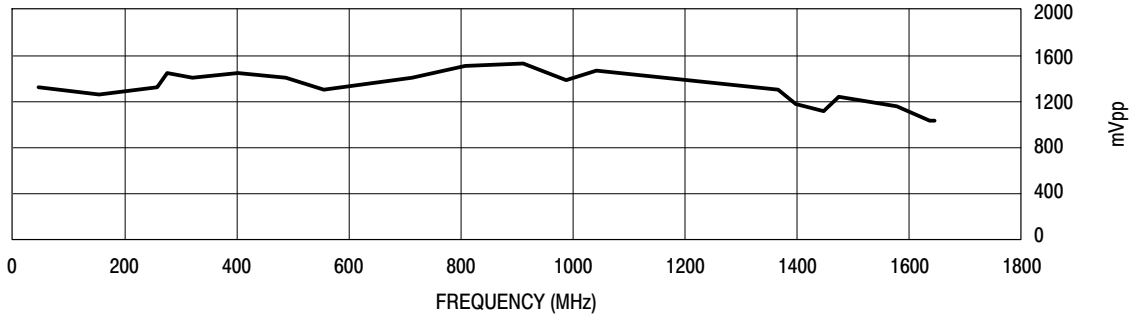

Figure 4. Output Amplitude versus Input Frequency

ORDERING INFORMATION

Device	Package	Shipping†
MC12080DG	SOIC−8 (Pb−Free)	98 Units / Rail
MC12080DR2G		2500 / Tape & Reel

†For information on tape and reel specifications, including part orientation and tape sizes, please refer to our Tape and Reel Packaging Specifications Brochure, BRD8011/D.

PACKAGE DIMENSIONS

SOIC−8 NB
CASE 751−07
ISSUE AK

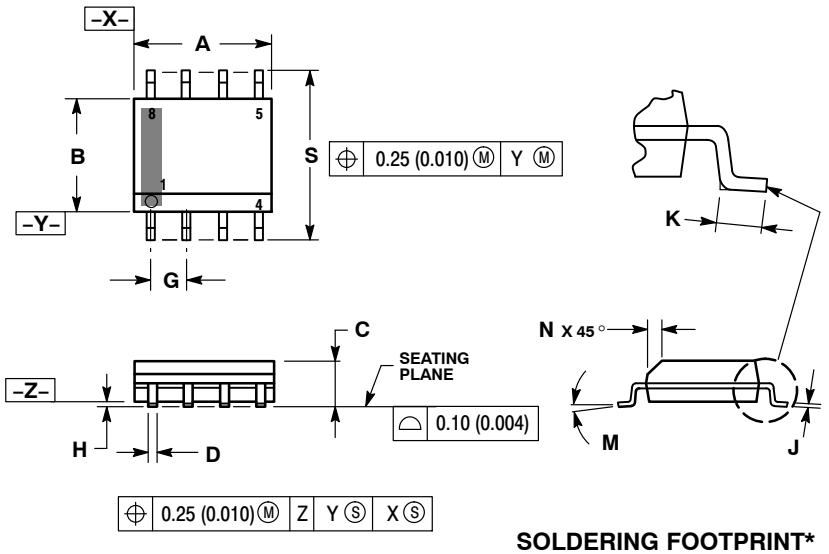

NOTES:
1. DIMENSIONING AND TOLERANCING PER ANSI Y14.5M, 1982.
2. CONTROLLING DIMENSION: MILLIMETER.
3. DIMENSION A AND B DO NOT INCLUDE MOLD PROTRUSION.
4. MAXIMUM MOLD PROTRUSION 0.15 (0.006) PER SIDE.
5. DIMENSION D DOES NOT INCLUDE DAMBAR PROTRUSION. ALLOWABLE DAMBAR PROTRUSION SHALL BE 0.127 (0.005) TOTAL IN EXCESS OF THE D DIMENSION AT MAXIMUM MATERIAL CONDITION.
6. 751−01 THRU 751−06 ARE OBSOLETE. NEW STANDARD IS 751−07.

	MILLIMETERS		INCHES	
DIM	MIN	MAX	MIN	MAX
A	4.80	5.00	0.189	0.197
B	3.80	4.00	0.150	0.157
C	1.35	1.75	0.053	0.069
D	0.33	0.51	0.013	0.020
G	1.27 BSC		0.050 BSC	
H	0.10	0.25	0.004	0.010
J	0.19	0.25	0.007	0.010
K	0.40	1.27	0.016	0.050
M	0 °	8 °	0 °	8 °
N	0.25	0.50	0.010	0.020
S	5.80	6.20	0.228	0.244

SOLDERING FOOTPRINT*

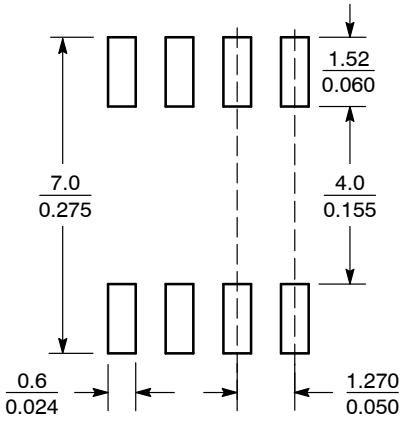

SCALE 6:1 $\left(\frac{\text{mm}}{\text{inches}}\right)$

*For additional information on our Pb−Free strategy and soldering details, please download the ON Semiconductor Soldering and Mounting Techniques Reference Manual, SOLDERRM/D.

ON Semiconductor and ON are registered trademarks of Semiconductor Components Industries, LLC (SCILLC). SCILLC owns the rights to a number of patents, trademarks, copyrights, trade secrets, and other intellectual property. A listing of SCILLC's product/patent coverage may be accessed at www.onsemi.com/site/pdf/Patent−Marking.pdf. SCILLC reserves the right to make changes without further notice to any products herein. SCILLC makes no warranty, representation or guarantee regarding the suitability of its products for any particular purpose, nor does SCILLC assume any liability arising out of the application or use of any product or circuit, and specifically disclaims any and all liability, including without limitation special, consequential or incidental damages. "Typical" parameters which may be provided in SCILLC data sheets and/or specifications can and do vary in different applications and actual performance may vary over time. All operating parameters, including "Typicals" must be validated for each customer application by customer's technical experts. SCILLC does not convey any license under its patent rights nor the rights of others. SCILLC products are not designed, intended, or authorized for use as components in systems intended for surgical implant into the body, or other applications intended to support or sustain life, or for any other application in which the failure of the SCILLC product could create a situation where personal injury or death may occur. Should Buyer purchase or use SCILLC products for any such unintended or unauthorized application, Buyer shall indemnify and hold SCILLC and its officers, employees, subsidiaries, affiliates, and distributors harmless against all claims, costs, damages, and expenses, and reasonable attorney fees arising out of, directly or indirectly, any claim of personal injury or death associated with such unintended or unauthorized use, even if such claim alleges that SCILLC was negligent regarding the design or manufacture of the part. SCILLC is an Equal Opportunity/Affirmative Action Employer. This literature is subject to all applicable copyright laws and is not for resale in any manner.

PUBLICATION ORDERING INFORMATION

LITERATURE FULFILLMENT:
Literature Distribution Center for ON Semiconductor
P.O. Box 5163, Denver, Colorado 80217 USA
Phone: 303−675−2175 or 800−344−3860 Toll Free USA/Canada
Fax: 303−675−2176 or 800−344−3867 Toll Free USA/Canada
Email: orderlit@onsemi.com

N. American Technical Support: 800−282−9855 Toll Free USA/Canada
Europe, Middle East and Africa Technical Support:
Phone: 421 33 790 2910
Japan Customer Focus Center
Phone: 81−3−5817−1050

ON Semiconductor Website: **www.onsemi.com**

Order Literature: http://www.onsemi.com/orderlit

For additional information, please contact your local Sales Representative