MC100EPT24

LVTTL/LVCMOS to Differential LVECL Translator

The MC100EPT24 is a LVTTL/LVCMOS to differential LVECL translator. Because LVECL levels and LVTTL/LVCMOS levels are used, a –3.3V, +3.3V and ground are required. The small outline 8–lead SOIC package and the single gate of the EPT24 makes it ideal for those applications where space, performance, and low power are at a premium.

The EPT24 is available in the 100E standard and is compatible with ECL 100K logic levels.

- 350ps Typical Propagation Delay
- Maximum Frequency > 1.0GHz
- Differential ECL Outputs
- Small Outline SOIC Package
- PNP LVTTL Inputs for Minimal Loading
- Flow Through Pinouts
- Q Output will default HIGH with inputs open
- ESD Protection: 4000 KV HBM, 200 V MM
- Moisture Sensitivity Level 1, Indefinite Time Out of Drypack. For Additional Information, See Application Note AND8003/D
- Flammability Rating: UL–94 code V–0 @ 1/8”, Oxygen Index 28 to 34
- Transistor Count = 181 devices

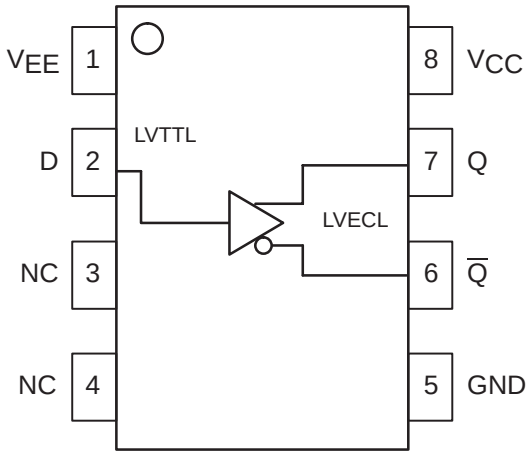

Figure 1. 8–Lead Pinout (Top View) **and Logic Diagram**

ON Semiconductor
Formerly a Division of Motorola
http://onsemi.com

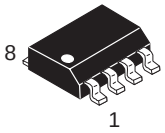

SO–8
D SUFFIX
CASE 751

MARKING DIAGRAM

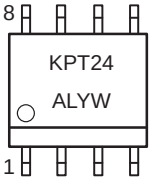

A = Assembly Location
L = Wafer Lot
Y = Year
W = Work Week

*For additional information, see Application Note AND8002/D

PIN DESCRIPTION	
PIN	**FUNCTION**
Q, $\overline{Q}$	Differential LVECL Outputs
D	LVTTL Input
V_{CC}	Positive Supply
GND	Ground
V_{EE}	Negative Supply

ORDERING INFORMATION

Device	Package	Shipping
MC100EPT24D	SOIC	98 Units/Rail
MC100EPT24DR2	SOIC	2500 Tape & Reel

© Semiconductor Components Industries, LLC, 1999

MAXIMUM RATINGS*

Symbol	Parameter	Value	Unit
V_{EE}	Power Supply (V_{CC} = 0V)	–3.8 to 0	VDC
V_{CC}	Power Supply (V_{EE} = 0V)	3.8 to 0	VDC
V_I	Input Voltage (V_{CC} = 0V, V_I not more negative than V_{EE})	–3.8 to 0	VDC
V_I	Input Voltage (V_{EE} = 0V, V_I not more positive than V_{CC})	3.8 to 0	VDC
I_{out}	Output Current Continuous Surge	50 100	mA
T_A	Operating Temperature Range	–40 to +85	°C
T_{stg}	Storage Temperature	–65 to +150	°C
θ_{JA}	Thermal Resistance (Junction–to–Ambient) Still Air 500lfpm	190 130	°C/W
θ_{JC}	Thermal Resistance (Junction–to–Case)	41 to 44 ± 5%	°C/W
T_{sol}	Solder Temperature (<2 to 3 Seconds: 245°C desired)	265	°C

* Maximum Ratings are those values beyond which damage to the device may occur.

LVTTL INPUT DC CHARACTERISTICS (V_{CC} = 3.3V ±0.3V; GND = 0V; T_A = –40°C to +85°C)

Symbol	Characteristic	Min	Typ	Max	Unit
I_{IH}	Input HIGH Current (V_{in} = 2.7V)			20	μA
I_{IHH}	Input HIGH Current MAX (V_{in} = 6.0V)			100	μA
I_{IL}	Input LOW Current (V_{in} = 0.5V)			–0.6	mA
V_{IK}	Input Clamp Voltage (I_{in} = –18mA)			–1.2	V
V_{IH}	Input HIGH Voltage	2.0			V
V_{IL}	Input LOW Voltage			0.8	V

LVECL OUTPUT DC CHARACTERISTICS (V_{CC} = 3.3V ± 0.3V; V_{EE} = –3.3V ± 0.3V; GND = 0V)

		–40°C			25°C			85°C			
Symbol	Characteristic	Min	Typ	Max	Min	Typ	Max	Min	Typ	Max	Unit
V_{OH}	Output HIGH Voltage (Note 1.)	-1135	–1020	-885	-1135	–1020	-885	-1135	–1030	-885	mV
V_{OL}	Output LOW Voltage (Note 1.)	-1935	–1750	-1685	-1935	–1770	-1685	-1925	–1790	-1685	mV
I_{CC}	Power Supply Current		2.0	4.0		2.0	4.0		2.0	4.0	mA
I_{EE}	Power Supply Current	20	30	38	20	30	38	20	30	38	mA

1. Output levels will vary 1:1 with GND; Outputs loaded through 50Ω to GND – 2.0V.

AC CHARACTERISTICS (V_{CC} = 3.3V ± 0.3V; V_{EE} = –3.3V ± 0.3V; GND = 0V)

		–40°C			25°C			85°C			
Symbol	Characteristic	Min	Typ	Max	Min	Typ	Max	Min	Typ	Max	Unit
f_{max}	Maximum Toggle Frequency (Note 2.)	1.0			1.0			1.0			GHz
t_{PLH}, t_{PHL}	Propagation Delay to Output Differential (Note 3.)	300	500	800	300	530	800	300	560	800	ps
t_{JITTER}	Cycle–to–Cycle Jitter		TBD			TBD			TBD		ps
t_r t_f	Output Rise/Fall Times Q, $\overline{Q}$ (20% – 80%)	70	125	170	80	130	180	100	150	200	ps

2. F_{max} guaranteed for functionality only. V_{OL} and V_{OH} levels are guaranteed at DC only.
3. TTL input of 0V to 3V.

PACKAGE DIMENSIONS

SO–8
D SUFFIX
PLASTIC SOIC PACKAGE
CASE 751–06
ISSUE T

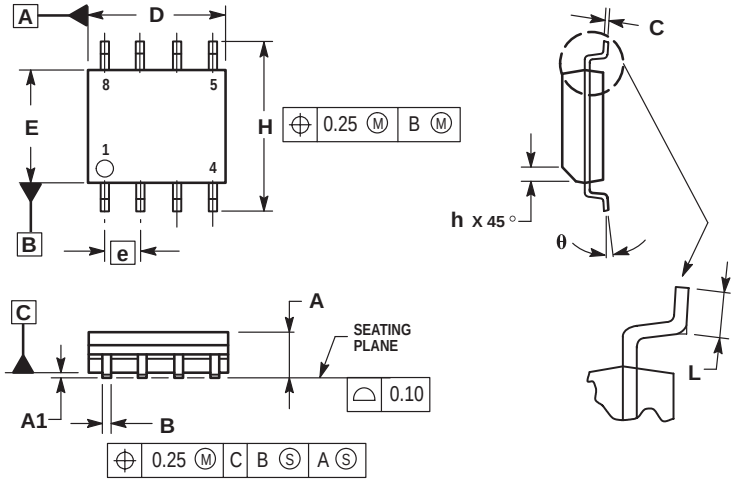

NOTES:
1. DIMENSIONING AND TOLERANCING PER ASME Y14.5M, 1994.
2. DIMENSIONS ARE IN MILLIMETER.
3. DIMENSION D AND E DO NOT INCLUDE MOLD PROTRUSION.
4. MAXIMUM MOLD PROTRUSION 0.15 PER SIDE.
5. DIMENSION B DOES NOT INCLUDE DAMBAR PROTRUSION. ALLOWABLE DAMBAR PROTRUSION SHALL BE 0.127 TOTAL IN EXCESS OF THE B DIMENSION AT MAXIMUM MATERIAL CONDITION.

	MILLIMETERS	
DIM	MIN	MAX
A	1.35	1.75
A1	0.10	0.25
B	0.35	0.49
C	0.19	0.25
D	4.80	5.00
E	3.80	4.00
e	1.27 BSC	
H	5.80	6.20
h	0.25	0.50
L	0.40	1.25
θ	0°	7°

ON Semiconductor and  are trademarks of Semiconductor Components Industries, LLC (SCILLC). SCILLC reserves the right to make changes without further notice to any products herein. SCILLC makes no warranty, representation or guarantee regarding the suitability of its products for any particular purpose, nor does SCILLC assume any liability arising out of the application or use of any product or circuit, and specifically disclaims any and all liability, including without limitation special, consequential or incidental damages. "Typical" parameters which may be provided in SCILLC data sheets and/or specifications can and do vary in different applications and actual performance may vary over time. All operating parameters, including "Typicals" must be validated for each customer application by customer's technical experts. SCILLC does not convey any license under its patent rights nor the rights of others. SCILLC products are not designed, intended, or authorized for use as components in systems intended for surgical implant into the body, or other applications intended to support or sustain life, or for any other application in which the failure of the SCILLC product could create a situation where personal injury or death may occur. Should Buyer purchase or use SCILLC products for any such unintended or unauthorized application, Buyer shall indemnify and hold SCILLC and its officers, employees, subsidiaries, affiliates, and distributors harmless against all claims, costs, damages, and expenses, and reasonable attorney fees arising out of, directly or indirectly, any claim of personal injury or death associated with such unintended or unauthorized use, even if such claim alleges that SCILLC was negligent regarding the design or manufacture of the part. SCILLC is an Equal Opportunity/Affirmative Action Employer.

PUBLICATION ORDERING INFORMATION

North America Literature Fulfillment:
Literature Distribution Center for ON Semiconductor
P.O. Box 5163, Denver, Colorado 80217 USA
Phone: 303–675–2175 or 800–344–3860 Toll Free USA/Canada
Fax: 303–675–2176 or 800–344–3867 Toll Free USA/Canada
Email: ONlit@hibbertco.com

N. American Technical Support: 800–282–9855 Toll Free USA/Canada

EUROPE: LDC for ON Semiconductor – European Support
German **Phone:** (+1) 303–308–7140 (M–F 2:30pm to 5:00pm Munich Time)
Email: ONlit–german@hibbertco.com
French **Phone:** (+1) 303–308–7141 (M–F 2:30pm to 5:00pm Toulouse Time)
Email: ONlit–french@hibbertco.com
English **Phone:** (+1) 303–308–7142 (M–F 1:30pm to 5:00pm UK Time)
Email: ONlit@hibbertco.com

ASIA/PACIFIC: LDC for ON Semiconductor – Asia Support
Phone: 303–675–2121 (Tue–Fri 9:00am to 1:00pm, Hong Kong Time)
Toll Free from Hong Kong 800–4422–3781
Email: ONlit–asia@hibbertco.com

JAPAN: ON Semiconductor, Japan Customer Focus Center
4–32–1 Nishi–Gotanda, Shinagawa–ku, Tokyo, Japan 141–8549
Phone: 81–3–5740–2745
Email: r14525@onsemi.com

Fax Response Line: 303–675–2167
800–344–3810 Toll Free USA/Canada

ON Semiconductor Website: http://onsemi.com

For additional information, please contact your local
Sales Representative.