36W AC/DC Adapter

MC036-HA Series

MORNSUN®



RoHS

FEATURES

- Universal input Voltage : 90 - 264VAC, 50/60Hz
- DoE Level VI efficiency
- Over voltage, Over current, Short circuit protection
- Fully enclosed plastic case
- 2 pole China plug
- Small wall-mounted type

MC036-HA series is a small wall-mounted type adapter. This series features universal input voltage, low power consumption, high efficiency, high reliability, and safer isolation, meets IEC/EN61000-4, CISPR22/EN55032 and GB4943. The entire series supplies different models with output voltages range between 9V and 24V that can satisfy the demands for the various types of consumer electronic devices, telecommunication devices, office and civil applications devices.

Electric Specifications

Model		MC03609HA	MC03612HA	MC03615HA	MC03618HA	MC03624HA
Output	DC Voltage	9V	12V	15V	18V	24V
	Rated current	3.0A	3.0A	2.4A	2.0A	1.5A
	Current range	0-3.0A	0-3.0A	0-2.4A	0-2.0A	0-1.5A
	Rated power	27W	36W	36W	36W	36W
	Voltage Accuracy	±5%	±5%	±5%	±5%	±5%
	Line Regulation	±1%	±1%	±1%	±1%	±1%
	Load Regulation	±5%	±5%	±5%	±5%	±5%
	Ripple & Noise*	120mVp-p max	120mVp-p max	150mVp-p max	180mVp-p max	240mVp-p max
	Start-up time	3s@100-240VAC, full load				
	Hold-up time	10ms@115VAC, full load, 20ms@230VAC, full load				
	Rise time	30ms max				
	Overshoot/ Undershoot	±10%				
	Transient response	Output voltage range ±5%, load 25%-50%, 50%-75%, slope: 0.5A/us, frequency: 50Hz-10KHz				
Input	Input voltage	90 - 264VAC				
	Input frequency	47 - 63Hz				
	Efficiency(Typ.)	86.62%	87.40%	87.40%	87.40%	87.40%
	Input current	1.0A Max@100VAC, full load				
	Inrush current	Cold start: 40A/115VAC, 80A/230VAC				
	No load power	<0.1W				
	Leakage current	0.25mA Max@240VAC				
Protections	Over voltage	Rated output voltage 110%-150%				
	Over current	Rated output current 110%-200%, self-recovery				
	Short circuit	Hiccup, Continuous, self-recovery				
Note	* Ripple and noise are measured by 20MHz bandwidth; at full load, 100-240VAC input, output terminated with a 0.1uF ceramic capacitor and a 10uF electrolytic capacitor.					

MORNSUN Guangzhou Science & Technology Co., Ltd. reserves the copyright and right of final interpretation

General Specifications

Item	Operating Conditions	Min.	Typ.	Max.	Unit
Isolation Voltage	Input-output, Test 1 minute, leakage current<5mA	3000	--	--	VAC
Insulation Resistance	Input-output, add 500Vdc test voltage	100	--	--	MΩ
Operating Temperature		-10	--	40	℃
Storage Temperature		-25	--	70	
Operating Humidity		--	--	90	%RH
Storage Humidity		--	--	95	
Altitude		--	--	5000	m
Lifetime	25℃	2			years
MTBF	MIL-HDBK-217F (25℃)	50000	--	--	hours

Physical Specifications

Casing Material	PC,120℃ 94V-0
Color	Black/White(Other color can be designed by customization)
Dimension	(L)88.50mm*(W)43.50mm*(H)31.50mm
Weight	142g(Typ.)
Cooling Method	Free air convection

EMC Specifications

EMI	RE	EN55032, CLASS B	
	CE	EN55032, CLASS B	
EMS	ESD(MAX)	IEC/EN61000-4-2 Contact ±8KV/Air ±15KV	perf. Criteria B
	RS	IEC61000-4-3 3V/m	perf. Criteria A
	CS	IEC61000-4-6 3Vrms	perf. Criteria A
	Surge(MAX)	IEC/EN61000-4-5 ±4KV/ ±4KV	perf. Criteria B
Note: standard ESD contact ±4KV/Air ±8KV, Surge ±1KV/ ±1KV.			

Safety Standards

Application fields	Standard	Status	Note
IT	GB4943	Approved	
AV	GB8898	Meet	
Home appliances	GB4706	Meet	

MORNSUN Guangzhou Science & Technology Co., Ltd. reserves the copyright and right of final interpretation

Mechanical Drawing

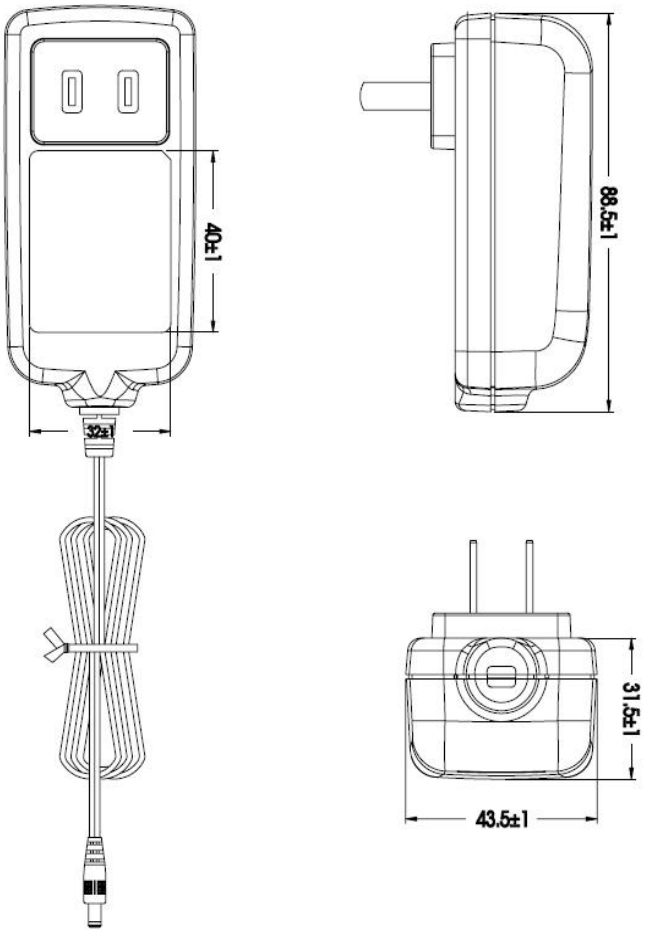

Remark:
No display tolerance: ±0.12
Unit: mm

DC Wire Drawing

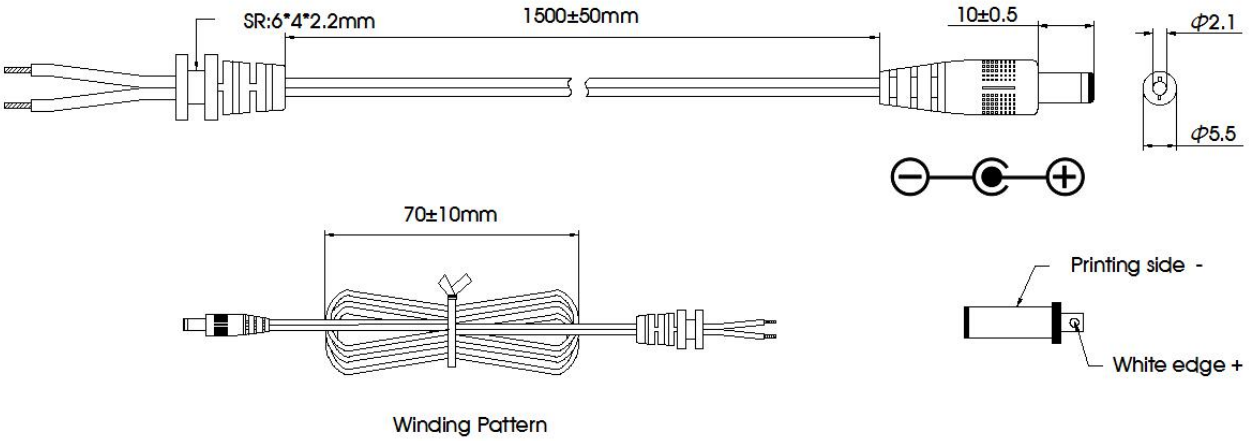

Winding Pattern

NO.	ITEM	Q' TY	DESCRIPTION
01	CABLE	1PCS	9V UL2468 18AWG/2C 80℃/300V L=1500mm 12V/15V UL2468 20AWG/2C 80℃/300V L=1500mm 18V/24V UL2468 22AWG/2C 80℃/300V L=1500mm
02	PLUG	1PCS	DC PLUG:5.5*2.1*10

Note:
1.Compliance with RoHS
2.No display tolerance: ±0.12
3.Unit: mm

MORNSUN Guangzhou Science & Technology Co., Ltd. reserves the copyright and right of final interpretation

Package Drawing

PRODUCT:

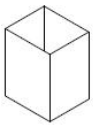

PLASTIC BAG



CARDBOARD:

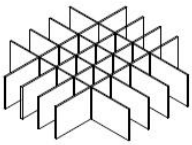

PAPERBOARD:



CARTON:

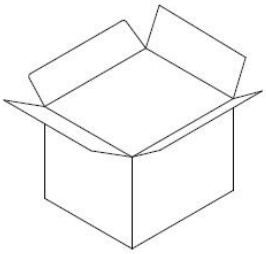

Note:
1.Storage condition:
Temperature: -25℃~+70℃
Relative humidity: 30%~80%RH.
2. Storage period: 6 months.
3. Antistatic: no requirement.

Note:

1. Products are related to laws and regulations: see "Features" , "EMC" and "Safety standards".
2. Our products shall be classified according to ISO14001 and related environmental laws and regulations, and shall be handled by qualified units.
3. If the product is not operated within the required load range, the product performance cannot be guaranteed to comply with all parameters in the datasheet ;
4. Unless otherwise specified, parameters in this datasheet were measured under the conditions of Ta=25 ℃, humidity<75% with nominal input voltage and rated output load;
5. All index testing methods in this datasheet are based on our Company's corporate standards;
6. We can provide product customization service; Please contact our technicians directly for specific information;

Mornsun Guangzhou Science & Technology Co., Ltd.
Address: No. 5, Kehui St. 1, Kehui Development Center, Science Ave., Guangzhou Science City, Luogang District, Guangzhou, P. R. China
Tel: 86-20-38601850-8801 Fax: 86-20-38601272 E-mail: sales@mornsun.cn

MORNSUN Guangzhou Science & Technology Co., Ltd. reserves the copyright and right of final interpretation