PRELIMINARY DATA SHEET

ELPIDA

MOS INTEGRATED CIRCUIT

MC-4R256CPE6C

Direct Rambus™ DRAM RIMM™ Module

256M-BYTE (128M-WORD x 16-BIT)

EOL Product

Description

The Direct Rambus RIMM module is a general-purpose high-performance memory module subsystem suitable for use in a broad range of applications including computer memory, personal computers, workstations, and other applications where high bandwidth and low latency are required.

MC-4R256CPE6C modules consists of sixteen 128M Direct Rambus DRAM (Direct RDRAM™) devices (μPD488448). These are extremely high-speed CMOS DRAMs organized as 8M words by 16 bits. The use of Rambus Signaling Level (RSL) technology permits 600MHz, 711MHz or 800MHz transfer rates while using conventional system and board design technologies.

Direct RDRAM devices are capable of sustained data transfers at 1.25 ns per two bytes (10 ns per sixteen bytes).

The architecture of the Direct RDRAM enables the highest sustained bandwidth for multiple, simultaneous, randomly addressed memory transactions. The separate control and data buses with independent row and column control yield over 95 % bus efficiency. The Direct RDRAM's 32 banks support up to four simultaneous transactions per device.

Features

- 184 edge connector pads with 1mm pad spacing
- 256 MB Direct RDRAM storage
- Each RDRAM® has 32 banks, for 512 banks total on module
- Gold plated contacts
- RDRAMs use Chip Scale Package (CSP)
- Serial Presence Detect support
- Operates from a 2.5 V supply
- Low power and powerdown self refresh modes
- Separate Row and Column buses for higher efficiency
- Over Drive Factor (ODF) support

The information in this document is subject to change without notice. Before using this document, please confirm that this is the latest version.
Not all devices/types available in every country. Please check with local Elpida Memory, Inc. for availability and additional information.

Document No. E0043N11 (Ver. 1.1)
(Previous No. M14809EJ2V0DS00)
Date Published February 2006 CP (K)
Printed in Japan

This product became EOL in May, 2002.

©Elpida Memory, Inc. 2001-2006

Elpida Memory, Inc. is a joint venture DRAM company of NEC Corporation and Hitachi, Ltd.

Order information

Part number	Organization	I/O Freq. MHz	RAS access time ns	Package	Mounted devices
MC-4R256CPE6C - 845	128M x 16	800	45	184 edge connector pads RIMM	16 pieces of
MC-4R256CPE6C - 745		711	45	with heat spreader	μPD488448FF
MC-4R256CPE6C - 653		600	53	Edge connector : Gold plated	FBGA package

EOL Product

Module Pad Configuration

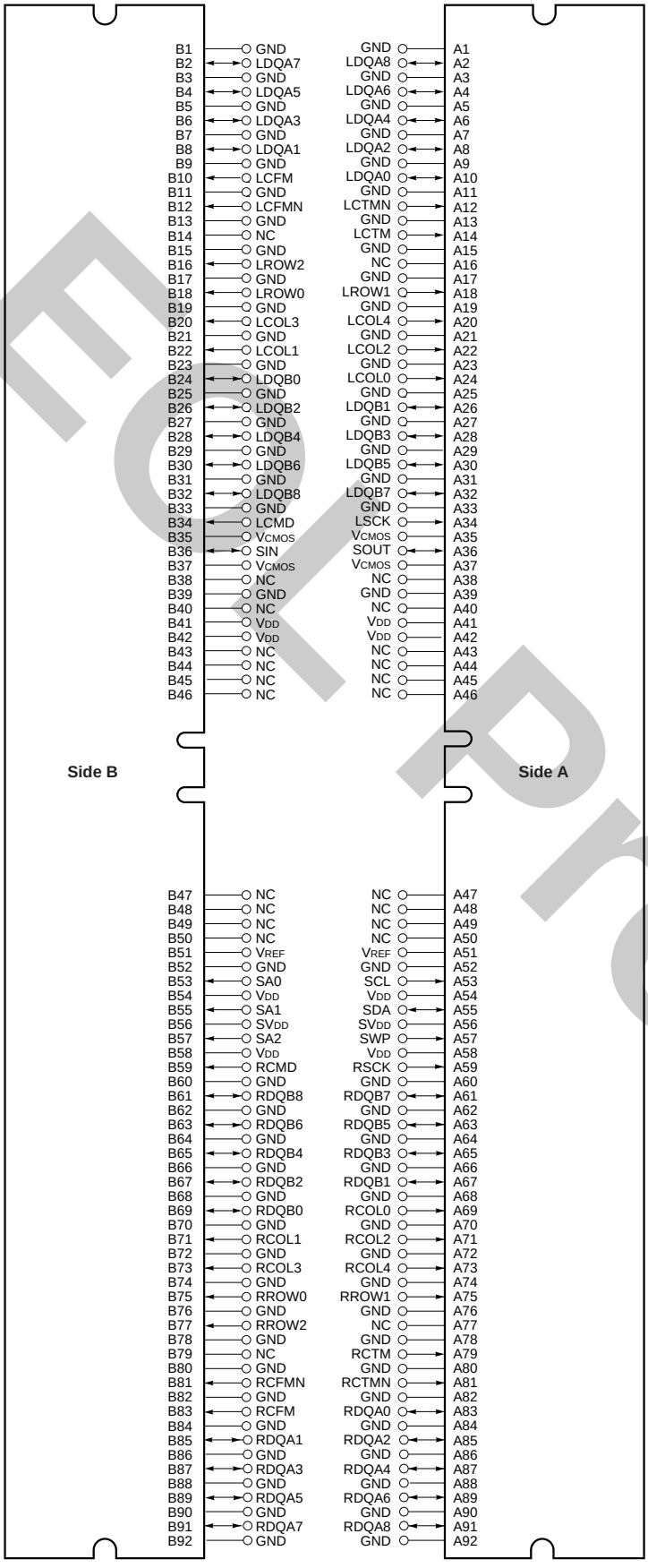

LCFM, LCFMN,
RCFM, RCFMN : Clock from master
LCTM, LCTMN,
RCTM, RCTMN : Clock to master
LCMD, RCMD : Serial Command Pad
LROW2 - LROW0,
RROW2 - RROW0 : Row bus
LCOL4 - LCOL0,
RCOL4 - RCOL0 : Column bus
LDQA8 - LDQA0,
RDQA8 - RDQA0 : Data bus A
LDQB8 - LDQB0,
RDQB8 - RDQB0 : Data bus B
LSCK, RSCK : Clock input
SA0 - SA2 : Serial Presence Detect Address
SCL, SDA : Serial Presence Detect Clock
SIN, SOUT : Serial I/O
SV_{DD} : SPD Voltage
SWP : Serial Presence Detect Write Protect
V_{CMOS} : Supply voltage for serial pads
V_{DD} : Supply voltage
V_{REF} : Logic threshold
GND : Ground reference
NC : These pads are not connected

EOL Product

Module Pad Names

Pad	Signal Name	Pad	Signal Name
A1	GND	B1	GND
A2	LDQA8	B2	LDQA7
A3	GND	B3	GND
A4	LDQA6	B4	LDQA5
A5	GND	B5	GND
A6	LDQA4	B6	LDQA3
A7	GND	B7	GND
A8	LDQA2	B8	LDQA1
A9	GND	B9	GND
A10	LDQA0	B10	LCFM
A11	GND	B11	GND
A12	LCTMN	B12	LCFMN
A13	GND	B13	GND
A14	LCTM	B14	NC
A15	GND	B15	GND
A16	NC	B16	LROW2
A17	GND	B17	GND
A18	LROW1	B18	LROW0
A19	GND	B19	GND
A20	LCOL4	B20	LCOL3
A21	GND	B21	GND
A22	LCOL2	B22	LCOL1
A23	GND	B23	GND
A24	LCOL0	B24	LDQB0
A25	GND	B25	GND
A26	LDQB1	B26	LDQB2
A27	GND	B27	GND
A28	LDQB3	B28	LDQB4
A29	GND	B29	GND
A30	LDQB5	B30	LDQB6
A31	GND	B31	GND
A32	LDQB7	B32	LDQB8
A33	GND	B33	GND
A34	LSCK	B34	LCMD
A35	V_{CMOS}	B35	V_{CMOS}
A36	SOUT	B36	SIN
A37	V_{CMOS}	B37	V_{CMOS}
A38	NC	B38	NC
A39	GND	B39	GND
A40	NC	B40	NC
A41	V_{DD}	B41	V_{DD}
A42	V_{DD}	B42	V_{DD}
A43	NC	B43	NC
A44	NC	B44	NC
A45	NC	B45	NC
A46	NC	B46	NC

Pad	Signal Name	Pad	Signal Name
A47	NC	B47	NC
A48	NC	B48	NC
A49	NC	B49	NC
A50	NC	B50	NC
A51	V_{REF}	B51	V_{REF}
A52	GND	B52	GND
A53	SCL	B53	SA0
A54	V_{DD}	B54	V_{DD}
A55	SDA	B55	SA1
A56	SV_{DD}	B56	SV_{DD}
A57	SWP	B57	SA2
A58	V_{DD}	B58	V_{DD}
A59	RSCK	B59	RCMD
A60	GND	B60	GND
A61	RDQB7	B61	RDQB8
A62	GND	B62	GND
A63	RDQB5	B63	RDQB6
A64	GND	B64	GND
A65	RDQB3	B65	RDQB4
A66	GND	B66	GND
A67	RDQB1	B67	RDQB2
A68	GND	B68	GND
A69	RCOL0	B69	RDQB0
A70	GND	B70	GND
A71	RCOL2	B71	RCOL1
A72	GND	B72	GND
A73	RCOL4	B73	RCOL3
A74	GND	B74	GND
A75	RROW1	B75	RROW0
A76	GND	B76	GND
A77	NC	B77	RROW2
A78	GND	B78	GND
A79	RCTM	B79	NC
A80	GND	B80	GND
A81	RCTMN	B81	RCFMN
A82	GND	B82	GND
A83	RDQA0	B83	RCFM
A84	GND	B84	GND
A85	RDQA2	B85	RDQA1
A86	GND	B86	GND
A87	RDQA4	B87	RDQA3
A88	GND	B88	GND
A89	RDQA6	B89	RDQA5
A90	GND	B90	GND
A91	RDQA8	B91	RDQA7
A92	GND	B92	GND

ELPIDA Preliminary

Module Connector Pad Description (1/2)

Signal	I/O	Type	Description
GND	—	—	Ground reference for RDRAM core and interface. 72 PCB connector pads.
LCFM	I	RSL	Clock from master. Interface clock used for receiving RSL signals from the Channel. Positive polarity.
LCFMN	I	RSL	Clock from master. Interface clock used for receiving RSL signals from the Channel. Negative polarity.
LCMD	I	VCMOS	Serial Command used to read from and write to the control registers. Also used for power management.
LCOL4..LCOL0	I	RSL	Column bus. 5-bit bus containing control and address information for column accesses.
LCTM	I	RSL	Clock to master. Interface clock used for transmitting RSL signals to the Channel. Positive polarity.
LCTMN	I	RSL	Clock to master. Interface clock used for transmitting RSL signals to the Channel. Negative polarity.
LDQA8..LDQA0	I/O	RSL	Data bus A. A 9-bit bus carrying a byte of read or write data between the Channel and the RDRAM. LDQA8 is non-functional on modules with x16 RDRAM devices.
LDQB8..LDQB0	I/O	RSL	Data bus B. A 9-bit bus carrying a byte of read or write data between the Channel and the RDRAM. LDQB8 is non-functional on modules with x16 RDRAM devices.
LROW2..LROW0	I	RSL	Row bus. 3-bit bus containing control and address information for row accesses.
LSCK	I	VCMOS	Serial clock input. Clock source used to read from and write to the RDRAM control registers.
NC	—	—	These pads are not connected. These 24 connector pads are reserved for future use.
RCFM	I	RSL	Clock from master. Interface clock used for receiving RSL signals from the Channel. Positive polarity.
RCFMN	I	RSL	Clock from master. Interface clock used for receiving RSL signals from the Channel. Negative polarity.
RCMD	I	VCMOS	Serial Command Input used to read from and write to the control registers. Also used for power management.
RCOL4..RCOL0	I	RSL	Column bus. 5-bit bus containing control and address information for column accesses.
RCTM	I	RSL	Clock to master. Interface clock used for transmitting RSL signals to the Channel. Positive polarity.
RCTMN	I	RSL	Clock to master. Interface clock used for transmitting RSL signals to the Channel. Negative polarity.
RDQA8..RDQA0	I/O	RSL	Data bus A. A 9-bit bus carrying a byte of read or write data between the Channel and the RDRAM. RDQA8 is non-functional on modules with x16 RDRAM devices.
RDQB8..RDQB0	I/O	RSL	Data bus B. A 9-bit bus carrying a byte of read or write data between the Channel and the RDRAM. RDQB8 is non-functional on modules with x16 RDRAM devices.
RROW2..RROW0	I	RSL	Row bus. 3-bit bus containing control and address information for row accesses.

EOL Product

(2/2)

Signal	I/O	Type	Description
RSCK	I	V_{CMOS}	Serial clock input. Clock source used to read from and write to the RDRAM control registers.
SA0	I	SV_{DD}	Serial Presence Detect Address 0.
SA1	I	SV_{DD}	Serial Presence Detect Address 1.
SA2	I	SV_{DD}	Serial Presence Detect Address 2.
SCL	I	SV_{DD}	Serial Presence Detect Clock.
SDA	I/O	SV_{DD}	Serial Presence Detect Data (Open Collector I/O).
SIN	I/O	V_{CMOS}	Serial I/O for reading from and writing to the control registers. Attaches to SIO0 of the first RDRAM on the module.
SOUT	I/O	V_{CMOS}	Serial I/O for reading from and writing to the control registers. Attaches to SIO1 of the last RDRAM on the module.
SV_{DD}	—	—	SPD Voltage. Used for signals SCL, SDA, SWP, SA0, SA1 and SA2.
SWP	I	SV_{DD}	Serial Presence Detect Write Protect (active high). When low, the SPD can be written as well as read.
V_{CMOS}	—	—	CMOS I/O Voltage. Used for signals CMD, SCK, SIN, SOUT.
V_{DD}	—	—	Supply voltage for the RDRAM core and interface logic.
V_{REF}	—	—	Logic threshold reference voltage for RSL signals.

EOL Product

Block Diagram

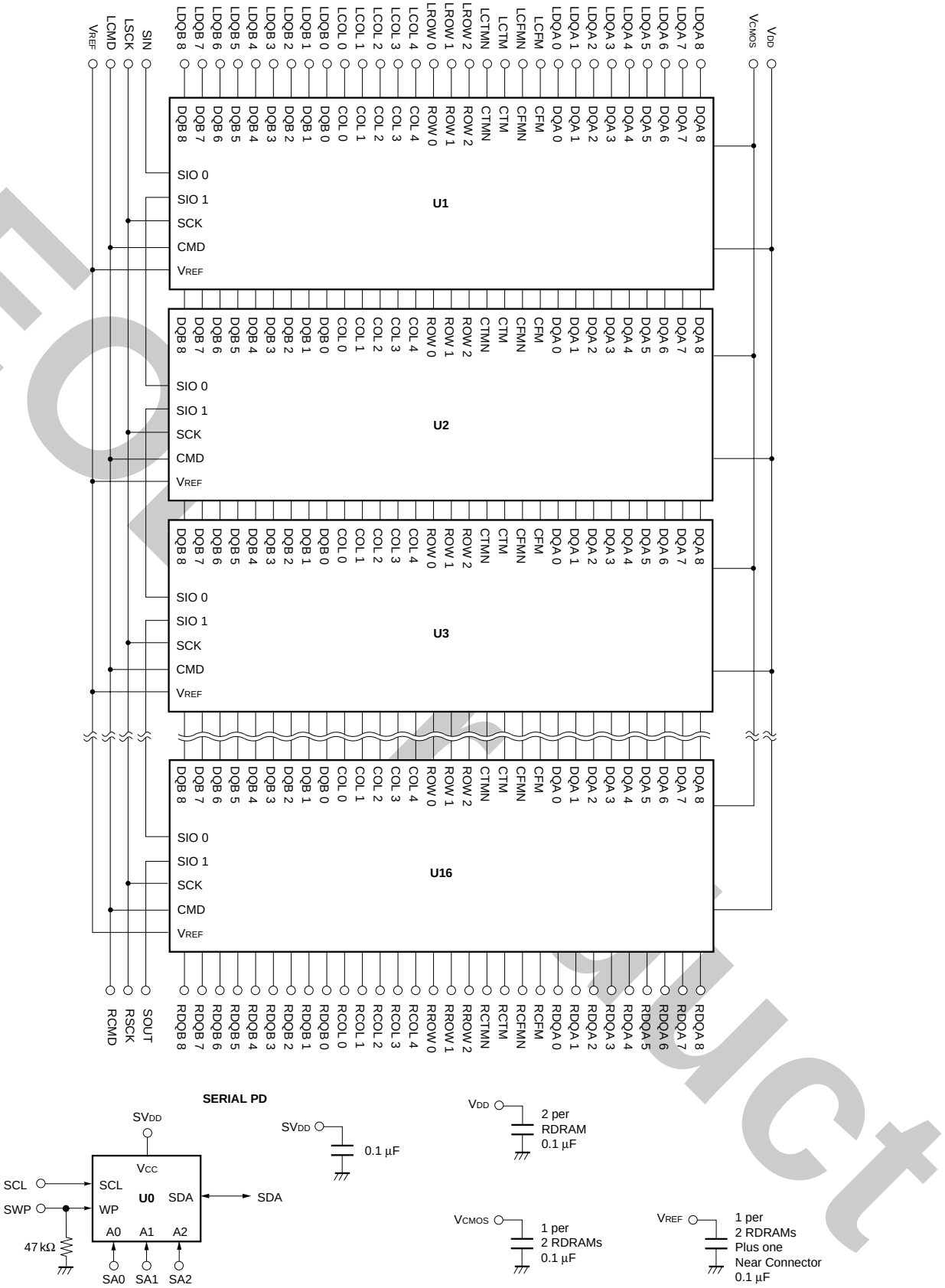

Remarks 1. Rambus Channel signals form a loop through the RIMM module, with the exception of the SIO chain.

2. See Serial Presence Detection Specification for information on the SPD device and its contents.

Not for New Product

Electrical Specification

Absolute Maximum Ratings

Symbol	Parameter	MIN.	MAX.	Unit
$V_{I,ABS}$	Voltage applied to any RSL or CMOS signal pad with respect to GND	–0.3	V_{DD} + 0.3	V
$V_{DD,ABS}$	Voltage on V_{DD} with respect to GND	–0.5	V_{DD} + 1.0	V
T_{STORE}	Storage temperature	–50	+100	°C

Caution Exposing the device to stress above those listed in Absolute Maximum Ratings could cause permanent damage. The device is not meant to be operated under conditions outside the limits described in the operational section of this specification. Exposure to Absolute Maximum Rating conditions for extended periods may affect device reliability.

DC Recommended Electrical Conditions

Symbol	Parameter and conditions		MIN.	MAX.	Unit
V_{DD}	Supply voltage		2.50 – 0.13	2.50 + 0.13	V
V_{CMOS}	CMOS I/O power supply at pad	2.5V controllers	2.5 – 0.13	2.5 + 0.25	V
		1.8V controllers	1.8 – 0.1	1.8 + 0.2	
V_{REF}	Reference voltage		1.4 – 0.2	1.4 + 0.2	V
V_{IL}	RSL input low voltage		V_{REF} – 0.5	V_{REF} – 0.2	V
V_{IH}	RSL input high voltage		V_{REF} + 0.2	V_{REF} + 0.5	V
$V_{IL,CMOS}$	CMOS input low voltage		–0.3	0.5V_{CMOS} – 0.25	V
$V_{IH,CMOS}$	CMOS input high voltage		0.5V_{CMOS}+0.25	V_{CMOS} + 0.3	V
$V_{OL,CMOS}$	CMOS output low voltage, $I_{OL,CMOS}$ = 1 mA		—	0.3	V
$V_{OH,CMOS}$	CMOS output high voltage, $I_{OH,CMOS}$ = –0.25 mA		V_{CMOS} – 0.3	—	V
I_{REF}	V_{REF} current, $V_{REF,MAX}$		–160.0	+160.0	μA
$I_{SCK,CMD}$	CMOS input leakage current, (0 ≤ V_{CMOS} ≤ V_{DD})		–160.0	+160.0	μA
$I_{SIN,SOUT}$	CMOS input leakage current, (0 ≤ V_{CMOS} ≤ V_{DD})		–10.0	+10.0	μA

EOL Product

AC Electrical Specifications

Symbol	Parameter and Conditions		MIN.	TYP.	MAX.	Unit
Z	Module Impedance		25.2	28	30.8	Ω
T_{PD}	Average clock delay from finger to finger of all RSL clock nets	-845			2.06	ns
	(CTM, CTMN,CFM, and CFMN)	-745			2.06	
		-653			2.10	
ΔT_{PD}	Propagation delay variation of RSL signals with respect to TPD [Note1,2]		–24		+24	ps
$\Delta T_{PD\text{-}CMOS}$	Propagation delay variation of SCK and CMD signals with respect to an average clock delay [Note1]		–100		+100	ps
V_α/V_{IN}	Attenuation Limit	-845			25	%
		-745			25	
		-653			21	
V_{XF}/V_{IN}	Forward crosstalk coefficient	-845			8	%
	(300ps input rise time 20% - 80%)	-745			8	
		-653			8	
V_{XB}/V_{IN}	Backward crosstalk coefficient	-845			2.5	%
	(300ps input rise time 20% - 80%)	-745			2.5	
		-653			2.5	
R_{DC}	DC Resistance Limit	-845			1.2	Ω
		-745			1.2	
		-653			1.2	

Notes 1. T_{PD} or Average clock delay is defined as the average delay from finger to finger of all RSL clock nets (CTM, CTMN, CFM, and CFMN).

2. If the RIMM module meets the following specification, then it is compliant to the specification. If the RIMM module does not meet these specifications, then the specification can be adjusted by the "Adjusted ΔT_{PD} Specification" table.

Adjusted ΔT_{PD} Specification

Symbol	Parameter and conditions	Adjusted MIN./MAX.	Absolute		Unit
			MIN.	MAX.	
ΔT_{PD}	Propagation delay variation of RSL signals with respect to T_{PD}	+/– [24+(18*N*ΔZ0)] [Note]	–50	+50	ps

Note N = Number of RDRAM devices installed on the RIMM module.
ΔZ0 = delta Z0% = (MAX. Z0 – MIN. Z0) / (MIN. Z0)
(MAX. Z0 and MIN. Z0 are obtained from the loaded (high impedance) impedance coupons of all RSL layers on the module.)

EOL Product

RIMM Module Current Profile

I_{DD}	RIMM module power conditions [Note1]		MAX.	Unit
I_{DD1}	One RDRAM in Read [Note2], balance in NAP mode	-845	753	mA
		-745	688	
		-653	603	
I_{DD2}	One RDRAM in Read [Note2], balance in Standby mode	-845	2,340	mA
		-745	2,200	
		-653	1,965	
I_{DD3}	One RDRAM in Read [Note2], balance in Active mode	-845	3,390	mA
		-745	3,100	
		-653	2,715	
I_{DD4}	One RDRAM in Write, balance in NAP mode	-845	713	mA
		-745	658	
		-653	578	
I_{DD5}	One RDRAM in Write, balance in Standby mode	-845	2,300	mA
		-745	2,170	
		-653	1,940	
I_{DD6}	One RDRAM in Write, balance in Active mode	-845	3,350	mA
		-745	3,070	
		-653	2,690	

Notes 1. Actual power will depend on individual RDRAM component specifications, memory controller and usage patterns. Power does not include Refresh Current.

2. I/O current is a function of the % of 1's, to add I/O power for 50 % 1's for a x16 need to add 257 mA for the following : V_{DD} = 2.5 V, V_{TERM} = 1.8 V, V_{REF} = 1.4 V and V_{DIL} = V_{REF} – 0.5 V.

EOL Product

Timing Parameters

The following timing parameters are from the RDRAMs pins, not the RIMM. Please refer to the RDRAM data sheet (μPD488448) for detailed timing diagrams.

Para-meter	Description	MIN.			MAX.	Units
		-845	-745	-653		
t_{RC}	Row Cycle time of RDRAM banks - the interval between ROWA packets with ACT commands to the same bank.	28	28	28	—	t_{CYCLE}
t_{RAS}	RAS-asserted time of RDRAM bank - the interval between ROWA packet with ACT command and next ROWR packet with PRER [Note 1] command to the same bank.	20	20	20	64μs [Note 2]	t_{CYCLE}
t_{RP}	Row Precharge time of RDRAM banks - the interval between ROWR packet with PRER [Note 1] command and next ROWA packet with ACT command to the same bank.	8	8	8	—	t_{CYCLE}
t_{PP}	Precharge-to-precharge time of RDRAM device - the interval between successive ROWR packets with PRER [Note 1] commands to any banks of the same device.	8	8	8	—	t_{CYCLE}
t_{RR}	RAS-to-RAS time of RDRAM device - the interval between successive ROWA packets with ACT commands to any banks of the same device.	8	8	8	—	t_{CYCLE}
t_{RCD}	RAS-to-CAS Delay - the interval from ROWA packet with ACT command to COLC packet with RD or WR command. Note - the RAS-to-CAS delay seen by the RDRAM core (t_{RCD-C}) is equal to $t_{RCD-C} = 1 + t_{RCD}$ because of differences in the row and column paths through the RDRAM interface.	9	7	7	—	t_{CYCLE}
t_{CAC}	CAS Access delay - the interval from RD command to Q read data. The equation for t_{CAC} is given in the TPARM register.	8	8	8	12	t_{CYCLE}
t_{CWD}	CAS Write Delay - interval from WR command to D write data.	6	6	6	6	t_{CYCLE}
t_{CC}	CAS-to-CAS time of RDRAM bank - the interval between successive COLC commands.	4	4	4	—	t_{CYCLE}
t_{PACKET}	Length of ROWA, ROWR, COLC, COLM or COLX packet.	4	4	4	4	t_{CYCLE}
t_{RTR}	Interval from COLC packet with WR command to COLC packet which causes retire, and to COLM packet with bytemask.	8	8	8	—	t_{CYCLE}
t_{OFFP}	The interval (offset) from COLC packet with RDA command, or from COLC packet with retire command (after WRA automatic precharge), or from COLC packet with PREC command, or from COLX packet with PREX command to the equivalent ROWR packet with PRER. The equation for t_{OFFP} is given in the TPARM register.	4	4	4	4	t_{CYCLE}
t_{RDP}	Interval from last COLC packet with RD command to ROWR packet with PRER.	4	4	4	—	t_{CYCLE}
t_{RTP}	Interval from last COLC packet with automatic retire command to ROWR packet with PRER.	4	4	4	—	t_{CYCLE}

Notes 1. Or equivalent PREC or PREX command.

2. This is a constraint imposed by the core, and is therefore in units of ms rather than t_{CYCLE}.

Not Product

Standard RIMM Module Marking

The RIMM modules are marked per Figure 1 below. This marking assists users to specify and verify if the correct RIMM modules are installed in their systems. In the diagram, a label is shown attached to the RIMM module's heat spreader. Information contained on the label is specific to the RIMM module and provides RDRAM information without requiring removal of the RIMM module's heat spreader.

Figure 1. RIMM Module marking example

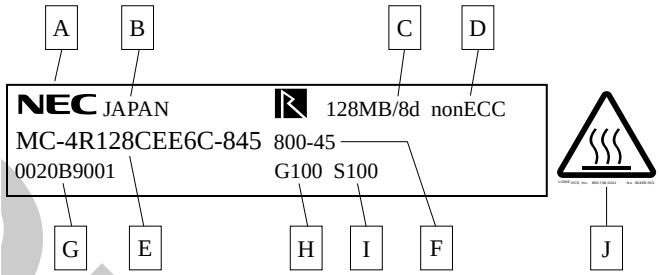

Label Field		Description	Marked Text	Units
A	Vendor logo	Vendor logo area	NEC	–
B	Manufacturing Country	Country of origin	JAPAN, USA, FRANCE	–
C	Module Memory Capacity	Number of 8-bit or 9-bit MBytes of RDRAM storage in RIMM module	64MB, 96MB, 128MB, 192MB, 256MB	MBytes
	Number of RDRAMs	Number of RDRAM devices contained in the RIMM module	/4d, /6d, /8d, /12d, /16d	RDRAM devices
D	ECC Support	Indicates whether the RIMM module supports 8-bit (non ECC) or 9-bit (ECC) Bytes	non ECC, ECC	–
E	Part No.	NEC RIMM Part No.	See table **Order information**	–
F	Memory Speed	Data transfer speed for RIMM module	800, 711, 600	MHz
	t_{RAC}	Row Access Time	-45, -53	ns
G	Manufacturing Lot No.	Manufactured Year code, Week code, In-house code	YYWW*****	–
H	Gerber Version	PCB Gerber file revision used on RIMM Module	G100 as Rev 1.00	–
I	SPD Version	SPD code version	S100 as Rev 1.00	–
J	Caution Logo	–	–	–

EOL Product

Package Drawings

184 EDGE CONNECTOR PADS RIMM (SOCKET TYPE) (1/2)

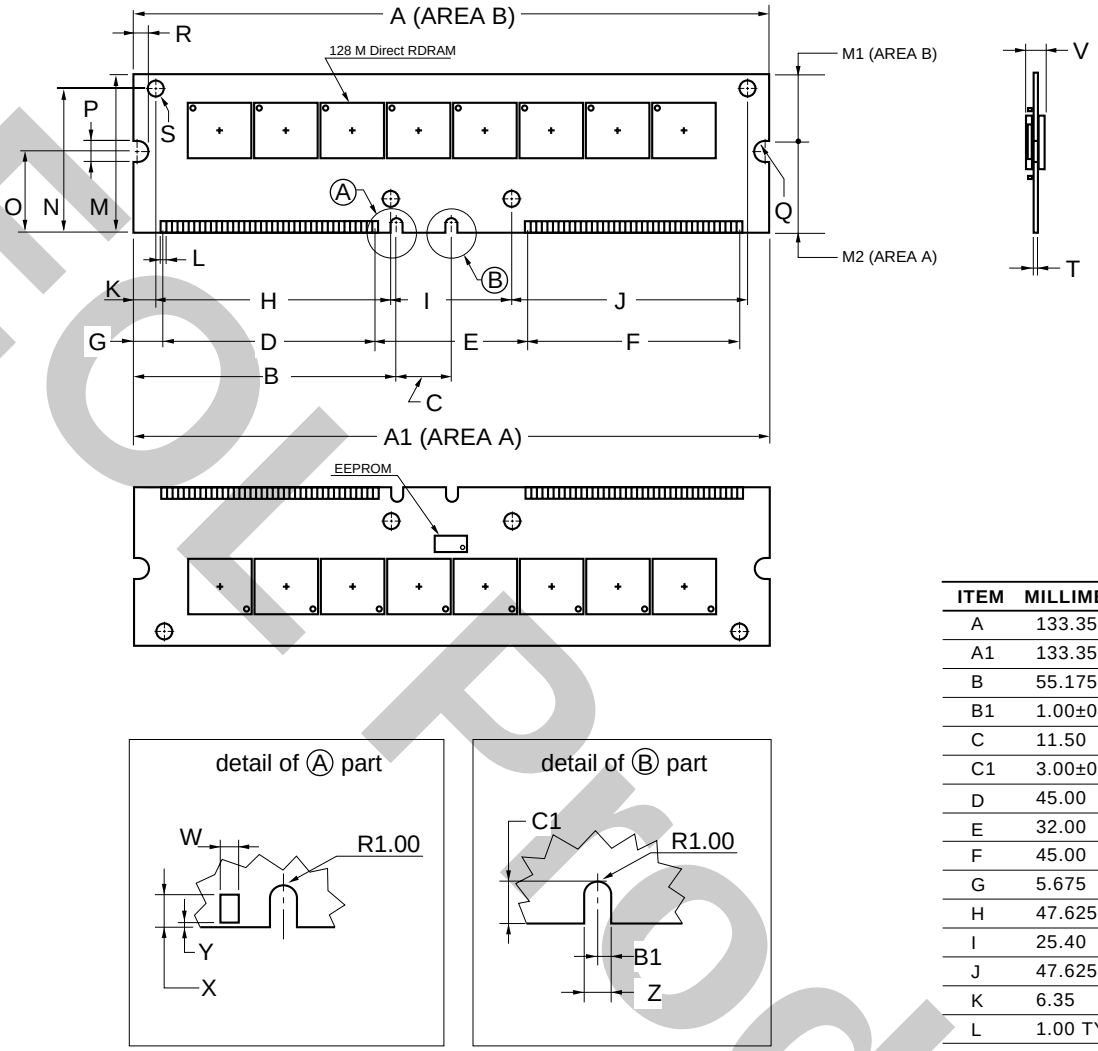

ITEM	MILLIMETERS
A	133.35 TYP.
A1	133.35±0.13
B	55.175
B1	1.00±0.10
C	11.50
C1	3.00±0.10
D	45.00
E	32.00
F	45.00
G	5.675
H	47.625
I	25.40
J	47.625
K	6.35
L	1.00 TYP.
M	31.75±0.13
M1	11.97
M2	19.78
N	29.21
O	17.78
P	4.00±0.10
Q	R 2.00
R	3.00±0.10
S	ϕ2.44
T	1.27±0.10
V	3.49 MAX.
W	0.80±0.10
X	2.99
Y	0.15
Z	2.00±0.10

EOL Product

184 EDGE CONNECTOR PADS RIMM (SOCKET TYPE) (2/2)

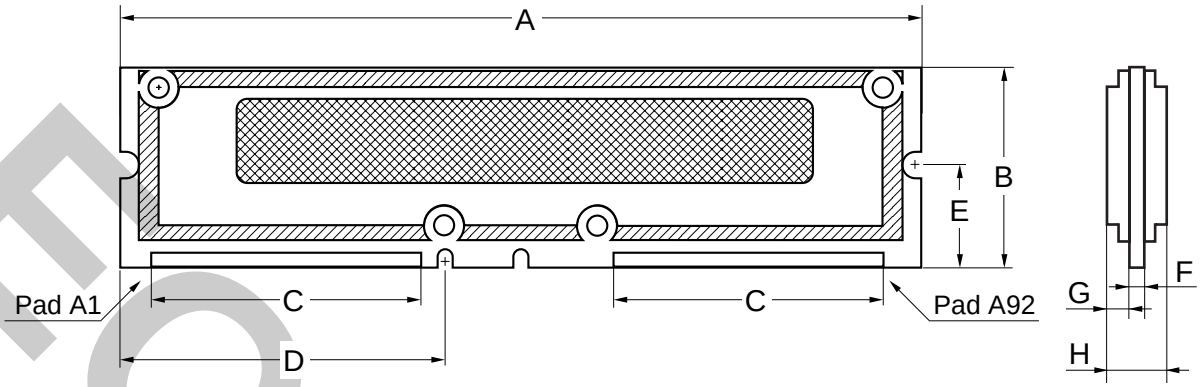

ITEM	DESCRIPTION	MIN.	TYP.	MAX.	UNIT
A	PCB length	133.22	133.35	133.48	mm
B	PCB height for 1.25" RIMM Module	31.62	31.75	31.88	mm
C	Center-center pad width from pad A1 to A46, A47 to A92, B1 to B46 or B47 to B92	44.95	45.00	45.05	mm
D	Spacing from PCB left edge to connector key notch	-	55.175	-	mm
E	Spacing from contact pad PCB edge to side edge retainer notch	-	17.78	-	mm
F	PCB thickness	1.17	1.27	1.37	mm
G	Heat spreader thickness from PCB surface (one side) to heat spreader top surface	-	-	3.09	mm
H	RIMM thickness	-	-	7.55	mm

EOL Product

NOTES FOR CMOS DEVICES

① PRECAUTION AGAINST ESD FOR SEMICONDUCTORS

Note:

Strong electric field, when exposed to a MOS device, can cause destruction of the gate oxide and ultimately degrade the device operation. Steps must be taken to stop generation of static electricity as much as possible, and quickly dissipate it once, when it has occurred. Environmental control must be adequate. When it is dry, humidifier should be used. It is recommended to avoid using insulators that easily build static electricity. Semiconductor devices must be stored and transported in an anti-static container, static shielding bag or conductive material. All test and measurement tools including work bench and floor should be grounded. The operator should be grounded using wrist strap. Semiconductor devices must not be touched with bare hands. Similar precautions need to be taken for PW boards with semiconductor devices on it.

② HANDLING OF UNUSED INPUT PINS FOR CMOS

Note:

No connection for CMOS device inputs can be cause of malfunction. If no connection is provided to the input pins, it is possible that an internal input level may be generated due to noise, etc., hence causing malfunction. CMOS devices behave differently than Bipolar or NMOS devices. Input levels of CMOS devices must be fixed high or low by using a pull-up or pull-down circuitry. Each unused pin should be connected to V_{DD} or GND with a resistor, if it is considered to have a possibility of being an output pin. All handling related to the unused pins must be judged device by device and related specifications governing the devices.

③ STATUS BEFORE INITIALIZATION OF MOS DEVICES

Note:

Power-on does not necessarily define initial status of MOS device. Production process of MOS does not define the initial operation status of the device. Immediately after the power source is turned ON, the devices with reset function have not yet been initialized. Hence, power-on does not guarantee out-pin levels, I/O settings or contents of registers. Device is not initialized until the reset signal is received. Reset operation must be executed immediately after power-on for devices having reset function.

EOL Product

Rambus, RDRAM and the Rambus Logo are registered trademarks of Rambus Inc.
DirectRambus, DirectRDRAM, RIMM, RModule and RSocket are trademarks of Rambus Inc.

CAUTION FOR HANDLING MEMORY MODULES

When handling or inserting memory modules, be sure not to touch any components on the modules, such as the memory IC, chip capacitors and chip resistors. It is necessary to avoid undue mechanical stress on these components to prevent damaging them.

When re-packing memory modules, be sure the modules are NOT touching each other. Modules in contact with other modules may cause excessive mechanical stress, which may damage the modules.

- **The information in this document is current as of August, 2000. The information is subject to change without notice. For actual design-in, refer to the latest publications of Elpida's data sheets or data books, etc., for the most up-to-date specifications of Elpida semiconductor products. Not all products and/or types are available in every country. Please check with an Elpida Memory, Inc. for availability and additional information.**
- No part of this document may be copied or reproduced in any form or by any means without prior written consent of Elpida. Elpida assumes no responsibility for any errors that may appear in this document.
- Elpida does not assume any liability for infringement of patents, copyrights or other intellectual property rights of third parties by or arising from the use of Elpida semiconductor products listed in this document or any other liability arising from the use of such products. No license, express, implied or otherwise, is granted under any patents, copyrights or other intellectual property rights of Elpida or others.
- Descriptions of circuits, software and other related information in this document are provided for illustrative purposes in semiconductor product operation and application examples. The incorporation of these circuits, software and information in the design of customer's equipment shall be done under the full responsibility of customer. Elpida assumes no responsibility for any losses incurred by customers or third parties arising from the use of these circuits, software and information.
- While Elpida endeavours to enhance the quality, reliability and safety of Elpida semiconductor products, customers agree and acknowledge that the possibility of defects thereof cannot be eliminated entirely. To minimize risks of damage to property or injury (including death) to persons arising from defects in Elpida semiconductor products, customers must incorporate sufficient safety measures in their design, such as redundancy, fire-containment, and anti-failure features.
- Elpida semiconductor products are classified into the following three quality grades:
  "Standard", "Special" and "Specific". The "Specific" quality grade applies only to semiconductor products developed based on a customer-designated "quality assurance program" for a specific application. The recommended applications of a semiconductor product depend on its quality grade, as indicated below. Customers must check the quality grade of each semiconductor product before using it in a particular application.
  "Standard": Computers, office equipment, communications equipment, test and measurement equipment, audio and visual equipment, home electronic appliances, machine tools, personal electronic equipment and industrial robots
  "Special": Transportation equipment (automobiles, trains, ships, etc.), traffic control systems, anti-disaster systems, anti-crime systems, safety equipment and medical equipment (not specifically designed for life support)
  "Specific": Aircraft, aerospace equipment, submersible repeaters, nuclear reactor control systems, life support systems and medical equipment for life support, etc.
  The quality grade of Elpida semiconductor products is "Standard" unless otherwise expressly specified in Elpida's data sheets or data books, etc. If customers wish to use Elpida semiconductor products in applications not intended by Elpida, they must contact an Elpida Memory, Inc. in advance to determine Elpida's willingness to support a given application.
  (Note)
  (1) "Elpida" as used in this statement means Elpida Memory, Inc. and also includes its majority-owned subsidiaries.
  (2) "Elpida semiconductor products" means any semiconductor product developed or manufactured by or for Elpida (as defined above).

Not Recommend for New Design