MBRF20U45CTA

SCHOTTKY BARRIER TYPE DIODE

SWITCHING MODE POWER SUPPLY APPLICATION.
CONVERTER & CHOPPER APPLICATION.

FEATURES

- Average Output Rectified Current : I_O=20A.
- Repetitive Peak Reverse Voltage : V_{RRM}=45V.
- Fast Reverse Recovery Time : t_{rr}=35ns.

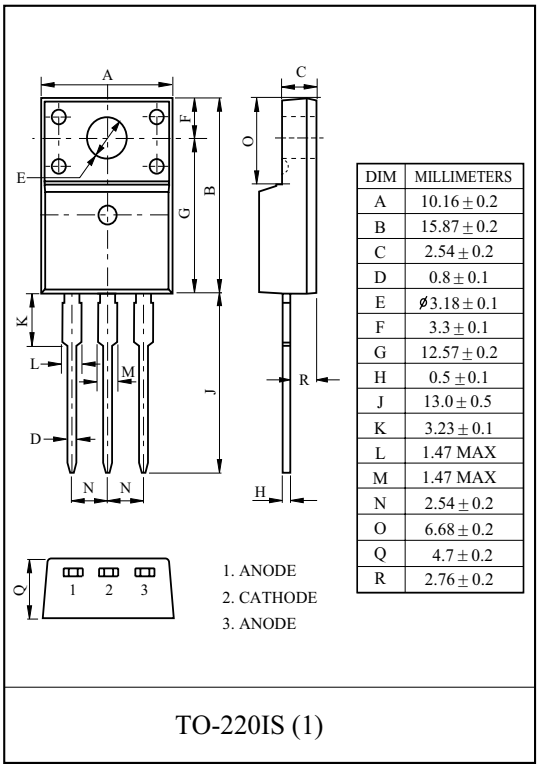

DIM	MILLIMETERS
A	10.16 ± 0.2
B	15.87 ± 0.2
C	2.54 ± 0.2
D	0.8 ± 0.1
E	ø3.18 ± 0.1
F	3.3 ± 0.1
G	12.57 ± 0.2
H	0.5 ± 0.1
J	13.0 ± 0.5
K	3.23 ± 0.1
L	1.47 MAX
M	1.47 MAX
N	2.54 ± 0.2
O	6.68 ± 0.2
Q	4.7 ± 0.2
R	2.76 ± 0.2

TO-220IS (1)

MAXIMUM RATING (Ta=25℃)

CHARACTERISTIC	SYMBOL	RATING	UNIT
Repetitive Peak Reverse Voltage	V_{RRM}	45	V
Average Output Rectified Current (Tc=105℃) (Note)	I_O	20	A
Peak One Cycle Surge Forward Current (Non-Repetitive 60Hz)	I_{FSM}	250	A
Junction Temperature	T_j	-40 150	℃
Storage Temperature Range	T_{stg}	-55 150	℃

Note : average forward current of centertap full wave connection.

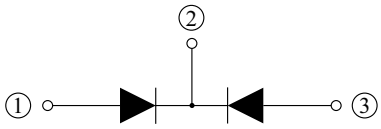

ELECTRICAL CHARACTERISTICS (Ta=25℃)

CHARACTERISTIC		SYMBOL	TEST CONDITION	MIN.	TYP.	MAX.	UNIT
Peak Forward Voltage	(Note)	V_{FM}	I_{FM}=10A	-	-	0.70	V
Repetitive Peak Reverse Current	(Note)	I_{RRM}	V_{RRM}=Rated	-	-	100	μA
Reverse Recovery Time	(Note)	t_{rr}	I_F=1.0A, di/dt=-30A/μs	-	-	35	ns
Thermal Resistance	(Note)	$R_{th(j-c)}$	Juction to Case	-	-	4.0	℃/W

Note : A value of one cell

I_F - V_F

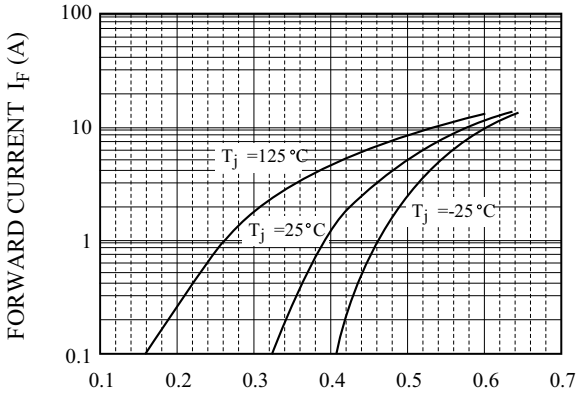
100
10
1
0.1
FORWARD CURRENT I_F (A)
T_j =125°C
T_j =25°C
T_j =-25°C
0.1
0.2
0.3
0.4
0.5
0.6
0.7
FORWARD VOLTAGE V_F (V)

I_R - V_R

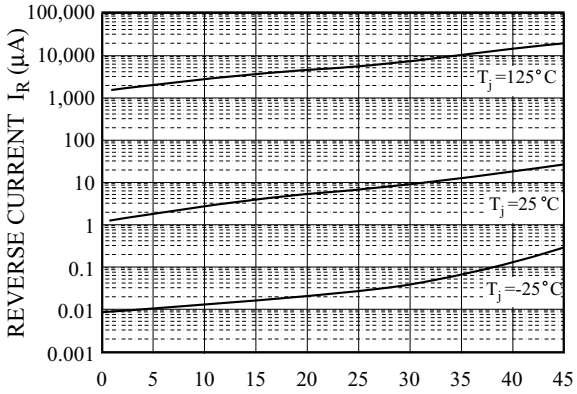
100,000
10,000
1,000
100
10
1
0.1
0.01
0.001
REVERSE CURRENT I_R (μA)
T_j =125°C
T_j =25°C
T_j =-25°C
0
5
10
15
20
25
30
35
40
45
REVERSE VOLTAGE V_R (V)