MBR460MFS, NRVB460MFS

SWITCHMODE Power Rectifiers

These state−of−the−art devices have the following features:

Features

- Low Power Loss / High Efficiency
- New Package Provides Capability of Inspection and Probe After Board Mounting
- Guardring for Stress Protection
- Low Forward Voltage Drop
- 175°C Operating Junction Temperature
- NRVB Prefix for Automotive and Other Applications Requiring Unique Site and Control Change Requirements; AEC−Q101 Qualified and PPAP Capable
- These are Pb−Free and Halide−Free Devices

Mechanical Characteristics:

- Case: Epoxy, Molded
- Epoxy Meets Flammability Rating UL 94−0 @ 0.125 in.
- Lead Finish: 100% Matte Sn (Tin)
- Lead and Mounting Surface Temperature for Soldering Purposes: 260°C Max. for 10 Seconds
- Device Meets MSL 1 Requirements

Applications

- Ideally Suited for use as an Output Rectifier in High Frequency (up to 2 MHz) Automotive and Non−Automotive Applications
- Output Rectification in Compact Portable Consumer Applications
- Freewheeling Diode used with Inductive Loads

ON Semiconductor®

http://onsemi.com

SCHOTTKY BARRIER RECTIFIERS 4 AMPERES 60 VOLTS



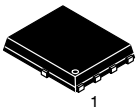

SO−8 FLAT LEAD CASE 488AA STYLE 2

MARKING DIAGRAM

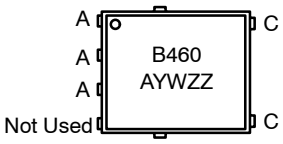

B460	= Specific Device Code
A	= Assembly Location
Y	= Year
W	= Work Week
ZZ	= Lot Traceability

ORDERING INFORMATION

Device	Package	Shipping†
MBR460MFST1G	SO−8 FL (Pb−Free)	1500 / Tape & Reel
MBR460MFST3G	SO−8 FL (Pb−Free)	5000 / Tape & Reel
NRVB460MFST1G	SO−8 FL (Pb−Free)	1500 / Tape & Reel
NRVB460MFST3G	SO−8 FL (Pb−Free)	5000 / Tape & Reel

†For information on tape and reel specifications, including part orientation and tape sizes, please refer to our Tape and Reel Packaging Specification Brochure, BRD8011/D.

© Semiconductor Components Industries, LLC, 2013

MAXIMUM RATINGS

Rating	Symbol	Value	Unit
Peak Repetitive Reverse Voltage Working Peak Reverse Voltage DC Blocking Voltage	V_{RRM} V_{RWM} V_R	 60	V
Average Rectified Forward Current (Rated V_R, T_C = 165°C)	$I_{F(AV)}$	4.0	A
Peak Repetitive Forward Current, (Rated V_R, Square Wave, 20 kHz, T_C = 165°C)	I_{FRM}	8.0	A
Non−Repetitive Peak Surge Current (Surge Applied at Rated Load Conditions Halfwave, Single Phase, 60 Hz)	I_{FSM}	40	A
Storage Temperature Range	T_{stg}	−65 to +175	°C
Operating Junction Temperature	T_J	−55 to +175	°C
Unclamped Inductive Switching Energy (10 mH Inductor, Non−repetitive)	E_{AS}	10	mJ
ESD Rating (Human Body Model)		3B	
ESD Rating (Machine Model)		M4	

Stresses exceeding Maximum Ratings may damage the device. Maximum Ratings are stress ratings only. Functional operation above the Recommended Operating Conditions is not implied. Extended exposure to stresses above the Recommended Operating Conditions may affect device reliability.

THERMAL CHARACTERISTICS

Characteristic	Symbol	Typ	Max	Unit
Thermal Resistance, Junction−to−Case, Steady State (Assumes 600 mm^2 1 oz. copper bond pad, on a FR4 board)	$R_{\theta JC}$	−	2.4	°C/W

ELECTRICAL CHARACTERISTICS

Instantaneous Forward Voltage (Note 1) (i_F = 4 Amps, T_J = 125°C) (i_F = 4 Amps, T_J = 25°C)	v_F	 0.65 0.71	 0.72 0.74	V
Instantaneous Reverse Current (Note 1) (Rated dc Voltage, T_J = 125°C) (Rated dc Voltage, T_J = 25°C)	i_R	 6.5 0.01	 20 0.2	mA

1. Pulse Test: Pulse Width = 300 μs, Duty Cycle ≤ 2.0%.

TYPICAL CHARACTERISTICS

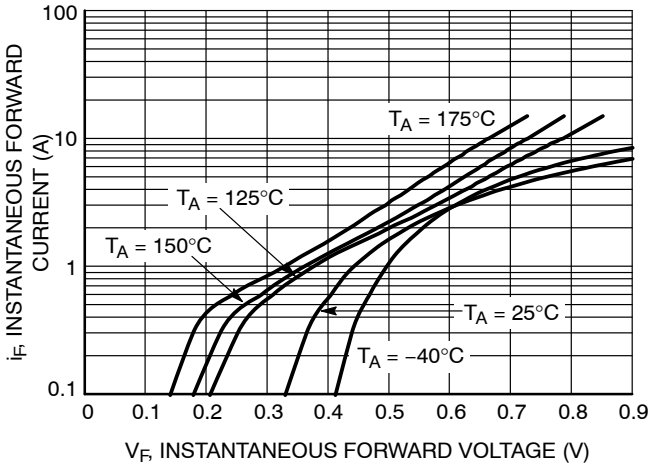

Figure 1. Typical Instantaneous Forward Characteristics

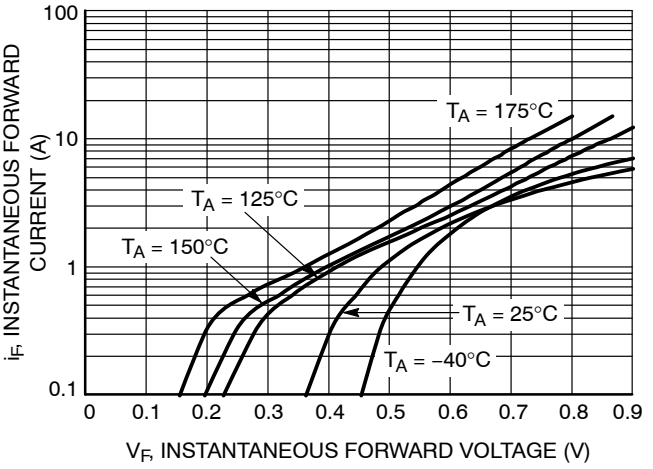

Figure 2. Maximum Instantaneous Forward Characteristics

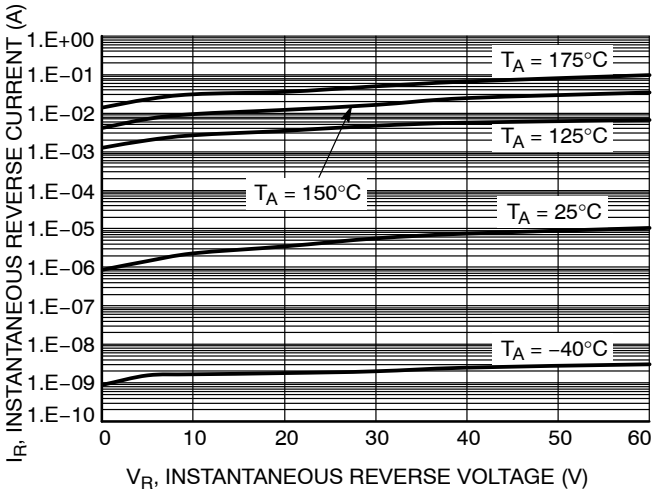

Figure 3. Typical Reverse Characteristics

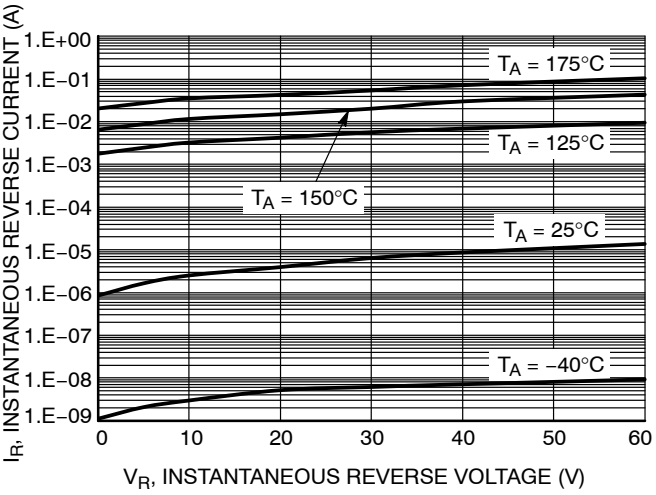

Figure 4. Maximum Reverse Characteristics

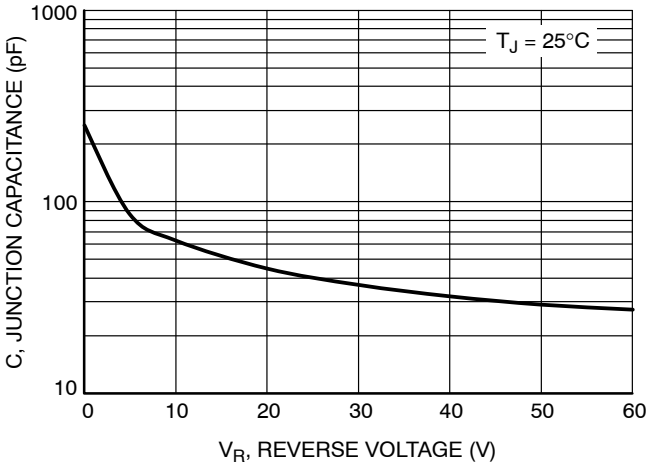

Figure 5. Typical Junction Capacitance

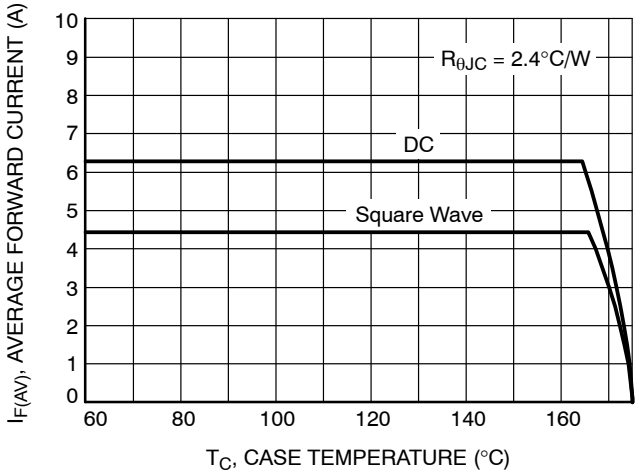

Figure 6. Current Derating TO−220AB

TYPICAL CHARACTERISTICS

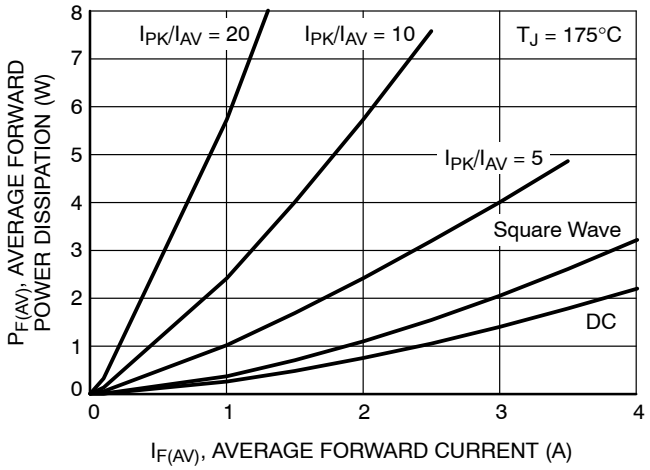

Figure 7. Forward Power Dissipation

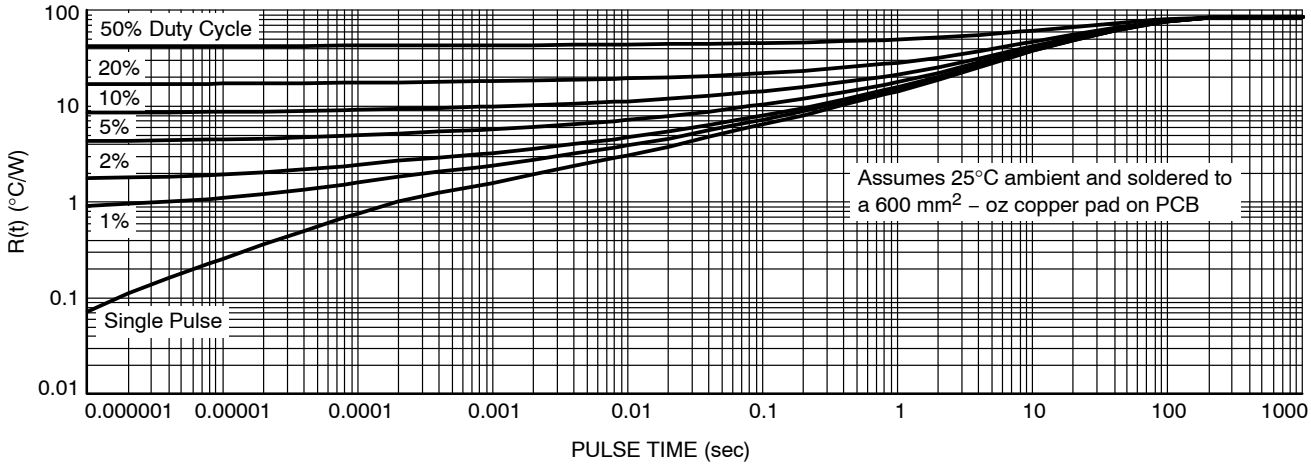

Figure 8. Thermal Characteristics

PACKAGE DIMENSIONS

DFN5 5x6, 1.27P
(SO−8FL)
CASE 488AA
ISSUE G

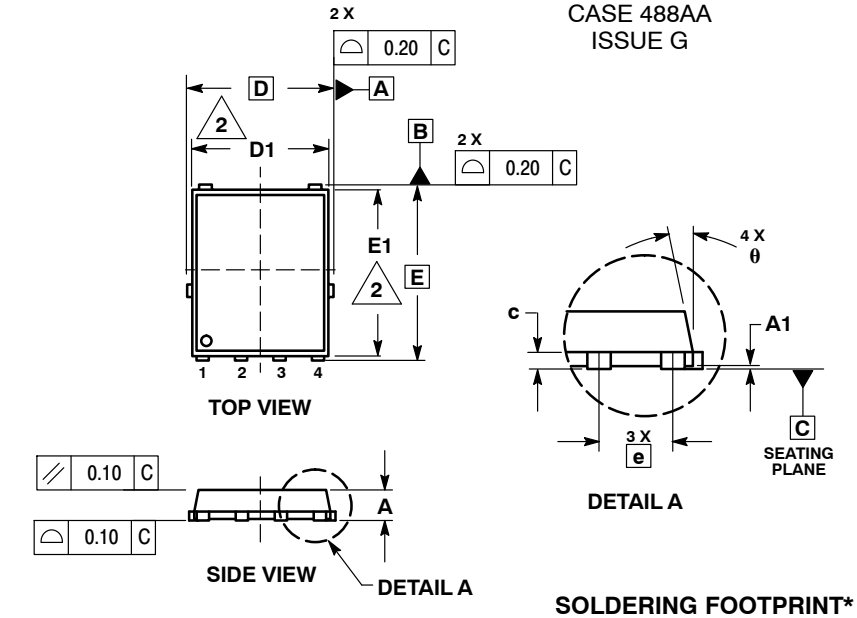

NOTES:
1. DIMENSIONING AND TOLERANCING PER ASME Y14.5M, 1994.
2. CONTROLLING DIMENSION: MILLIMETER.
3. DIMENSION D1 AND E1 DO NOT INCLUDE MOLD FLASH PROTRUSIONS OR GATE BURRS.

	MILLIMETERS		
DIM	MIN	NOM	MAX
A	0.90	1.00	1.10
A1	0.00	−−−	0.05
b	0.33	0.41	0.51
c	0.23	0.28	0.33
D		5.15 BSC	
D1	4.50	4.90	5.10
D2	3.50	−−−	4.22
E		6.15 BSC	
E1	5.50	5.80	6.10
E2	3.45	−−−	4.30
e		1.27 BSC	
G	0.51	0.61	0.71
K	1.20	1.35	1.50
L	0.51	0.61	0.71
L1	0.05	0.17	0.20
M	3.00	3.40	3.80
θ	0 °	−−−	12 °

STYLE 2:
PIN 1. ANODE
2. ANODE
3. ANODE
4. NO CONNECT
5. CATHODE

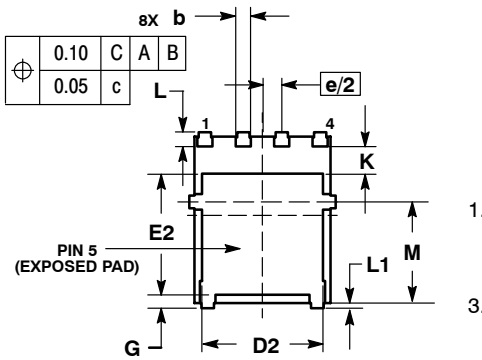

SOLDERING FOOTPRINT*

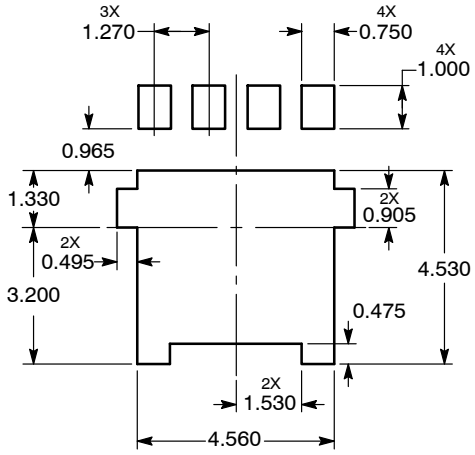

*For additional information on our Pb−Free strategy and soldering details, please download the ON Semiconductor Soldering and Mounting Techniques Reference Manual, SOLDERRM/D.

ON Semiconductor and ON are registered trademarks of Semiconductor Components Industries, LLC (SCILLC). SCILLC owns the rights to a number of patents, trademarks, copyrights, trade secrets, and other intellectual property. A listing of SCILLC's product/patent coverage may be accessed at www.onsemi.com/site/pdf/Patent−Marking.pdf. SCILLC reserves the right to make changes without further notice to any products herein. SCILLC makes no warranty, representation or guarantee regarding the suitability of its products for any particular purpose, nor does SCILLC assume any liability arising out of the application or use of any product or circuit, and specifically disclaims any and all liability, including without limitation special, consequential or incidental damages. "Typical" parameters which may be provided in SCILLC data sheets and/or specifications can and do vary in different applications and actual performance may vary over time. All operating parameters, including "Typicals" must be validated for each customer application by customer's technical experts. SCILLC does not convey any license under its patent rights nor the rights of others. SCILLC products are not designed, intended, or authorized for use as components in systems intended for surgical implant into the body, or other applications intended to support or sustain life, or for any other application in which the failure of the SCILLC product could create a situation where personal injury or death may occur. Should Buyer purchase or use SCILLC products for any such unintended or unauthorized application, Buyer shall indemnify and hold SCILLC and its officers, employees, subsidiaries, affiliates, and distributors harmless against all claims, costs, damages, and expenses, and reasonable attorney fees arising out of, directly or indirectly, any claim of personal injury or death associated with such unintended or unauthorized use, even if such claim alleges that SCILLC was negligent regarding the design or manufacture of the part. SCILLC is an Equal Opportunity/Affirmative Action Employer. This literature is subject to all applicable copyright laws and is not for resale in any manner.

PUBLICATION ORDERING INFORMATION

LITERATURE FULFILLMENT:
Literature Distribution Center for ON Semiconductor
P.O. Box 5163, Denver, Colorado 80217 USA
Phone: 303−675−2175 or 800−344−3860 Toll Free USA/Canada
Fax: 303−675−2176 or 800−344−3867 Toll Free USA/Canada
Email: orderlit@onsemi.com

N. American Technical Support: 800−282−9855 Toll Free USA/Canada
Europe, Middle East and Africa Technical Support:
Phone: 421 33 790 2910
Japan Customer Focus Center
Phone: 81−3−5817−1050

ON Semiconductor Website: **www.onsemi.com**

Order Literature: http://www.onsemi.com/orderlit

For additional information, please contact your local Sales Representative