MBR30U150CT,MBR30U150FCT,MBR30U150CD

SUPER LOW VF SCHOTTKY RECTIFIERS

Pb Pb-Free ROHS COMPLIANT

VOLTAGE 150Volts **CURRENT** 30 Amperes

TO-220AB/ITO-220AB/TO-263 Unit:(mm)

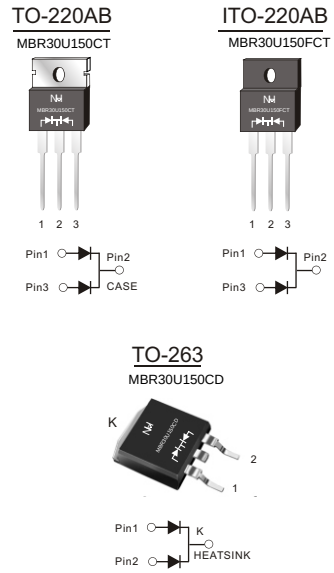

FEATURES

- Power pack
- Metal silicon junction ,majority carrier conduction
- Guard ring for overvoltage protection
- Low power loss ,high efficiency
- High current capability ,low forward voltage drop
- High forward surge capability
- High frequency operation
- Meets MSL Level 1，per J-STD-020, LF MAX peak of 245℃（for TO-263 package）
- Solder bath temperature 275℃ maximum，10s，per JESD22-B106（for TO-220AB and ITO-220AB package）
- Component in accordance to RoHS 2011/65/EU

MECHANICAL DATA

- Case: JEDEC TO-220AB、ITO-220AB、TO-263
- Molding compound meets UL94V-0 flammability rating
- Terminals: Lead solderable per J-STD-002 and JESD22-B102
- Polarity: As marked
- Mounting Torque: 10 in-lbs maximum

TYPICAL APPLICATIONS

For use in low voltage ,high frequency inverters ,DC/DC converters, free wheeling ,and polarity protection applications

• Maximum Ratings (Ratings at 25℃ ambient temperature unless otherwise specified)

Parameter		Symbol	MBR30U150CT/FCT/CD	Unit
Maximum repetitive peak reverse voltage		V_{RRM}	150	V
Maximum average forward rectified current (see fig.1)	Per leg	$I_{F(AV)}$	15.0	A
	Total device		30.0	
Peak forward surge current 8.3ms single half sine-wave superimposed on rated load (JEDEC method at rated TL)		I_{FSM}	250	A
Peak repetitive reverse current per diode at tp=2μs 1KHz		I_{RRM}	0.5	A
Operating junction and Storage temperature range		T_J,T_{stg}	-55 to+150	℃
Isolation voltage (ITO-220AB only) from terminals to heatsink t=1 min		V_{AC}	1500	V

• Electrical Characteristcs (Ratings at 25℃ ambient temperature unless otherwise specified)

Parameter	Test Conditions		Symbol	TYP.	MAX.	Unit
Instaneous forward voltage	Per leg I_F=15.0A	T_A=25℃	V_F 1)	0. 90	0. 92	V
		T_A=100℃		0. 78	–	
		T_A=125℃		0. 76	–	
	Per leg I_F=5.0A	T_A=25℃		0. 71	0. 73	
		T_A=100℃		0. 60	–	
		T_A=125℃		0. 55	–	
Reverse current	V_R=150V	T_A=25℃	I_R 2)	20	50	μA
		T_A=100℃		2	5	mA
		T_A=125℃		8	20	
Typical junction capacitance	4V, 1MHz		C_J	650		pF

Notes: 1.Pulse test: 300 μs pulse width,1% duty cycle
2.Pulse test: pulse width≤40ms

Download from alldatasheet

MBR30U150CT,MBR30U150FCT,MBR30U150CD

SUPER LOW VF SCHOTTKY RECTIFIERS

Pb-Free

ROHS COMPLIANT

RATINGANDCHARACTERISTICCURVES

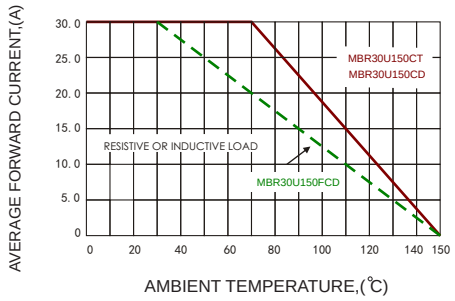

Fig.1 FORWARD CURRENT DERATING CURVE

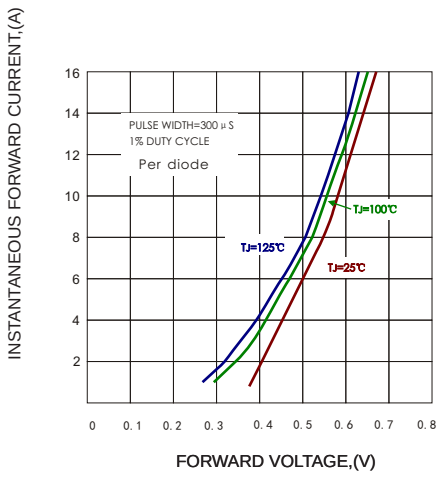

Fig.2-TYPICAL INSTANTANEOUS FORWARD

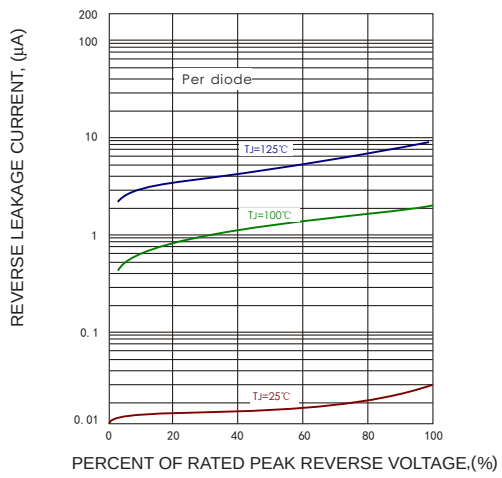

Fig.3 TYPICAL REVERSE CHARACTERISTICS

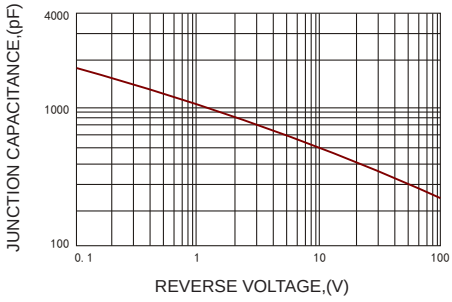

Fig.4 TYPICAL JUNCTION CAPACITANCE

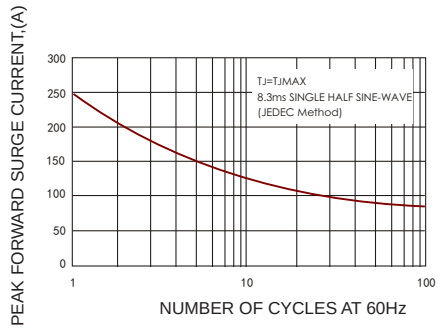

Fig.5- MAXIMUM NON - REPETITIVE SURGE CURRENT

Download from alldatasheet

MBR30U150CT,MBR30U150FCT,MBR30U150CD

SUPER LOW VF SCHOTTKY RECTIFIERS

Pb-Free

ROHS COMPLIANT

OUTLINE DRAWINGS

TO-220AB

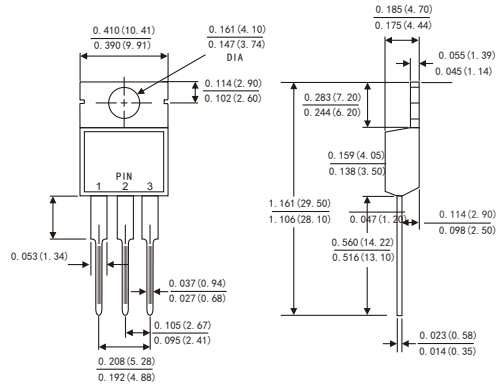

ITO-220AB

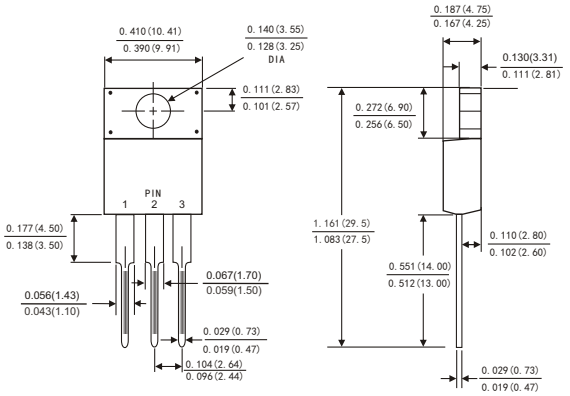

TO-263

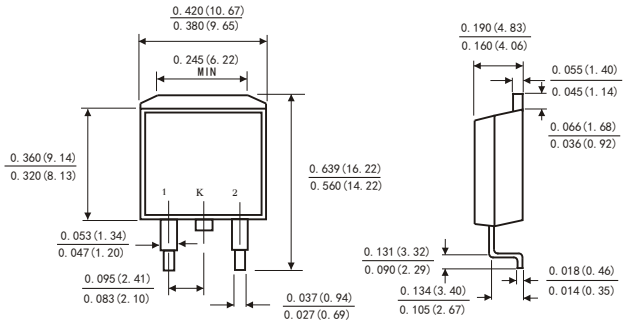

Suggested Pad Layout

(TO-263)

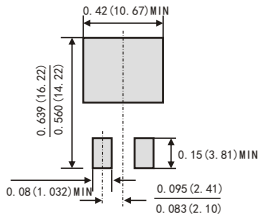

• Thermal Characteristcs (Ratings at 25℃ ambient temperature unless otherwise specified)

Parameter	Symbol	MBR30U150CT	MBR30U150FCT	MBR30U150CD	Unit
Typical thermal resistance 3)	$R_{\theta JC}$	2. 5	4. 5	2. 5	℃/W

3.Thermal resistance from junction to case

• Packing Information

Product code	Pack	Box Size L×W×H(mm)	Quantity(pcs/box)	Carton SizeL×W×H(mm)	Quantity(box/carton)
MBR30U150CT	P/T	550×150×40	1000	580×230×175	5
MBR30U150FCT	P/T	550×150×40	1000	580×230×175	5
MBR30U150CD	P/T	550×150×40	1000	580×230×175	5

Download from alldatasheet

MBR30U150CT,MBR30U150FCT,MBR30U150CD

SUPER LOW VF SCHOTTKY RECTIFIERS

Recommended wave soldering condition

Product	Peak Temperature	Soldering Time
Pb-free devices	260 +0/-5 °C	5 +1/-1 seconds

Recommended temperature profile for IR reflow

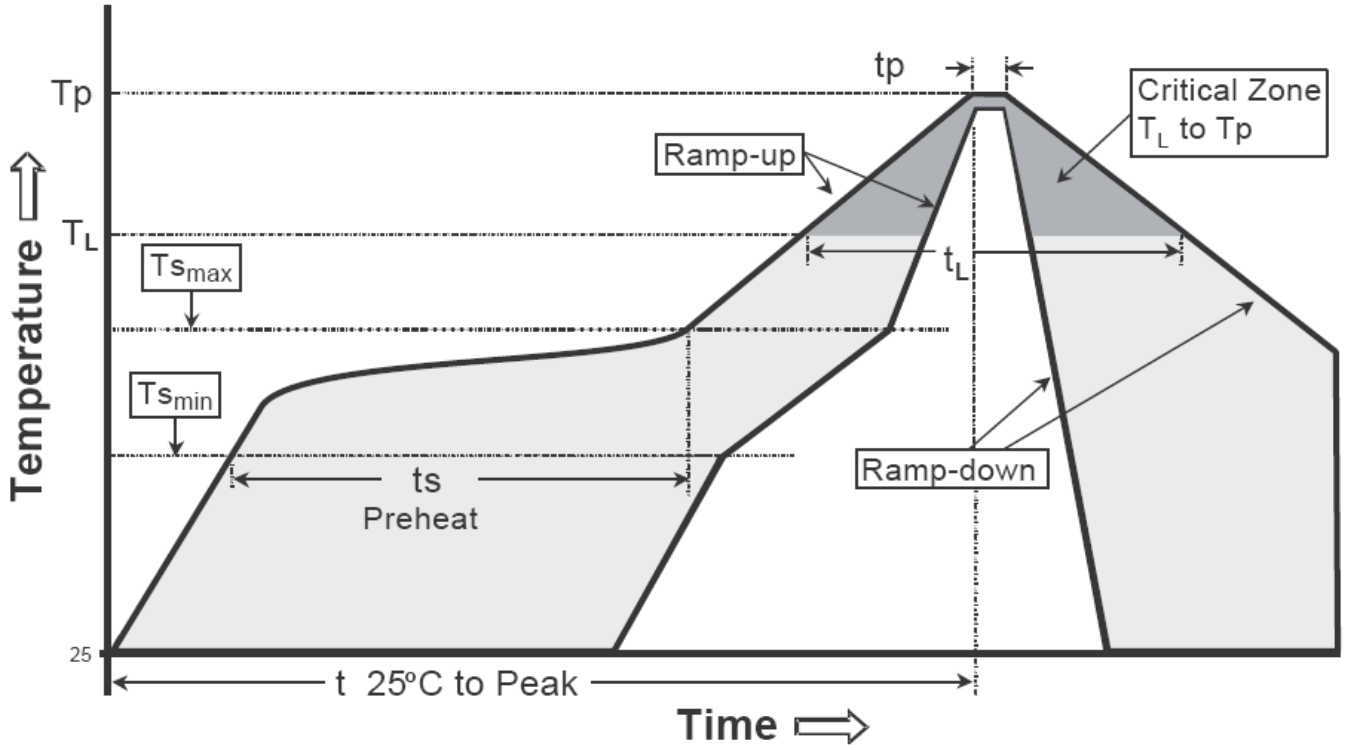

Profile feature	Sn-Pb eutectic Assembly	Pb-free Assembly
Average ramp-up rate (Tsmax to Tp)	3°C/second max.	3°C/second max.
Preheat −Temperature Min(T_S min) −Temperature Max(T_S max) −Time($t_{s\ min}$ to $t_{s\ max}$)	 100°C 150°C 60-120 seconds	 150°C 200°C 60-180 seconds
Time maintained above: −Temperature (T_L) − Time (t_L)	 183°C 60-150 seconds	 217°C 60-150 seconds
Peak Temperature(T_P)	240 +0/-5 °C	260 +0/-5 °C
Time within 5°C of actual peak temperature(tp)	10-30 seconds	20-40 seconds
Ramp down rate	6°C/second max.	6°C/second max.
Time 25 °C to peak temperature	6 minutes max.	8 minutes max.

Note : All temperatures refer to topside of the package, measured on the package body surface.

Download from alldatasheet

MBR30U150CT,MBR30U150FCT,MBR30U150CD

SUPER LOW VF SCHOTTKY RECTIFIERS

Disclaimer

- Reproducing and modifying information of the document is prohibited without permission from niuhang Electronics co., LTD
- Niuhang Electronics co., LTD. reserves the rights to make changes of the content herein the document anytime without notification.
- Niuhang Electronics co., LTD. disclaims any and all liability arising out of the application or use of any product including damages incidentally and consequentially occurred.
- Niuhang Electronics co., LTD. does not assume any and all implied warranties, including warranties of fitness for particular purpose,non-infringement and merchantability.
- Applications shown on the herein document are examples of standard use and operation. Customers are responsible in comprehending the suitable use in particular applications. Niuhang Electronics co., LTD.makes no representation or warranty that such applications will be suitable for the specified use without further testing or modification.
- The products shown herein are not designed and authorized for equipments requiring high level of reliability or relating to human life and for any applications concerning life-saving or life-sustaining,such as medical instruments.transportation equipment,aerospae machinery et cetera.Customers usin or selling these products for use in such applications do so at their own rish and agree to fully indemnify Niuhang Electronics co., LTD.for any damages resulting resulting from such improper use or sale.
- When the appearance of the product and chip size does not change, in order to product quality, change the internal structure and the production process Niuhang can not notify the customer.

Download from alldatasheet