JIANGSU CHANGJIANG ELECTRONICS TECHNOLOGY CO., LTD

TO-220A Plastic-Encapsulate Diodes

MBR1030,35,40,45,50

SCHOTTKY BARRIER RECTIFIER

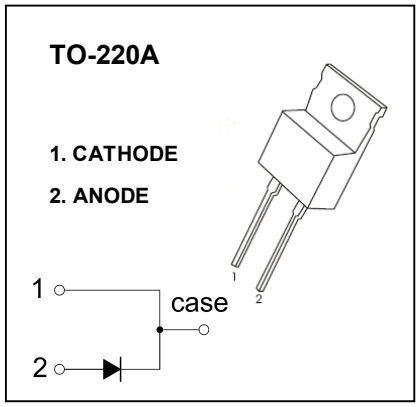

FEATURES

- Schottky Barrier Chip
- Guard Ring Die Construction for Transient Protection
- Low Power Loss,High Efficiency
- High Surge Capability
- High Current Capability and Low Forward Voltage Drop
- For Use in Low Voltage, High Frequency Inverters,Free Wheeling, and Polarity Protection Applications

MAXIMUM RATINGS (T_a=25℃ unless otherwise noted)

Symbol	Parameter	Value					Unit
		MBR1030	MBR1035	MBR1040	MBR1045	MBR1050	
V_{RRM}	Peak repetitive reverse voltage	30	35	40	45	50	V
V_{RWM}	Working peak reverse voltage						
V_R	DC blocking voltage						
$V_{R(RMS)}$	RMS reverse voltage	21	24.5	28	31.5	35	V
I_O	Average rectified output current	10					A
I_{FSM}	Non-Repetitive peak forward surge current 8.3ms half sine wave	150					A
P_D	Power dissipation	2					W
$R_{\Theta JA}$	Thermal resistance from junction to ambient	50					℃/W
T_j	Junction temperature	125					℃
T_{stg}	Storage temperature	-55~+150					℃

ELECTRICAL CHARACTERISTICS (T_a=25℃ unless otherwise specified)

Parameter	Symbol	Device	Test conditions	Min	Typ	Max	Unit
Reverse voltage	$V_{(BR)}$	MBR1030	I_R=1mA	30			V
		MBR1035		35			
		MBR1040		40			
		MBR1045		45			
		MBR1050		50			
Reverse current	I_R	MBR1030	V_R=30V			0.1	mA
		MBR1035	V_R=35V				
		MBR1040	V_R=40V				
		MBR1045	V_R=45V				
		MBR1050	V_R=50V				
Forward voltage	V_F	MBR1030-45	I_F=10A			0.84	V
		MBR1050				0.95	
Typical junction capacitance	C_j	MBR1030-50	V_R=4V,f=1MHz		400		pF

TO-220A Package Outline Dimensions

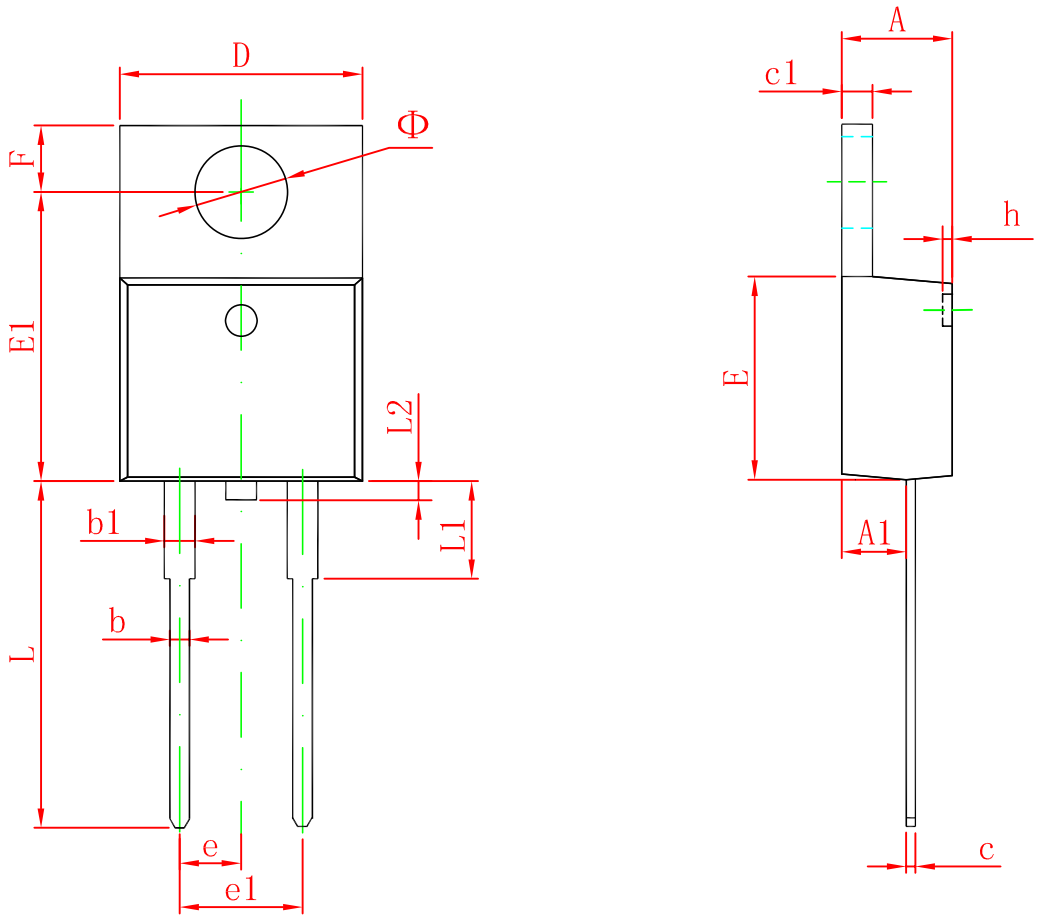

Symbol	Dimensions In Millimeters		Dimensions In Inches	
	Min	Max	Min	Max
A	4.470	4.670	0.176	0.184
A1	2.520	2.820	0.099	0.111
b	0.710	0.910	0.028	0.036
b1	1.170	1.370	0.046	0.054
c	0.310	0.530	0.012	0.021
c1	1.170	1.370	0.046	0.054
D	10.010	10.310	0.394	0.406
E	8.500	8.900	0.335	0.350
E1	12.060	12.460	0.475	0.491
e	2.540 TYP		0.100 TYP	
e1	4.980	5.180	0.196	0.204
F	2.590	2.890	0.102	0.114
h	0.000	0.300	0.000	0.012
L	13.400	13.800	0.528	0.543
L1	3.560	3.960	0.140	0.156
L2		1.000		0.039
Φ	3.735	3.935	0.147	0.155