16-bit Constant Current LED Sink Driver

Features

- 16 constant-current output channels
- Constant output current invariant to load voltage change：
  Constant output current range: 3-50 mA
- Excellent output current accuracy:
  between channels: ±3% (max.), and
  between ICs: ±6% (max.)
- Output current adjusted through an external resistor
- Fast response of output current, $\overline{OE}$ (min.): 400 ns
- 25MHz clock frequency
- Schmitt trigger input
- 3.3V / 5V supply voltage

MBI5025CN/CNS

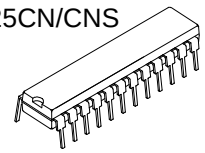

CN: P-DIP24-300-2.54
CNS: SDIP24-300-1.78

MBI5025CD/CF

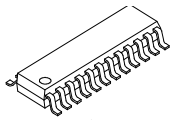

CD: SOP24-300-1.27
CF: SOP24-300-1.00

MBI5025CP

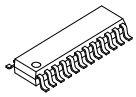

SSOP24-P-150-0.64

Current Accuracy		Conditions
Between Channels	Between ICs	
< ±3%	< ±6%	I_{OUT} = 3 mA ~ 35 mA

Product Description

MBI5025 is designed for LED displays. As an enhancement of its predecessor, MBI5016, MBI5025 exploits PrecisionDrive™ technology to enhance its output characteristics. MBI5025 contains a serial buffer and data latches which convert serial input data into parallel output format. At MBI5025 output stage, sixteen regulated current ports are designed to provide uniform and constant current sinks for driving LEDs within a large range of Vf variations.

MBI5025 provides users with great flexibility and device performance while using MBI5025 in their system design for LED display applications, e.g. LED panels. Users may adjust the output current from 3 mA to 35 mA through an external resistor, R_{ext}, which gives users flexibility in controlling the light intensity of LEDs. MBI5025 guarantees to endure maximum 17V at the output port. The high clock frequency, 25 MHz, also satisfies the system requirements of high volume data transmission.

©Macroblock, Inc. 2003
Floor 6-4, No.18, Pu-Ting Rd., Hsinchu, Taiwan 30077, ROC.
TEL: +886-3-579-0068, FAX: +886-3-579-7534 E-mail: info@mblock.com.tw

Block Diagram

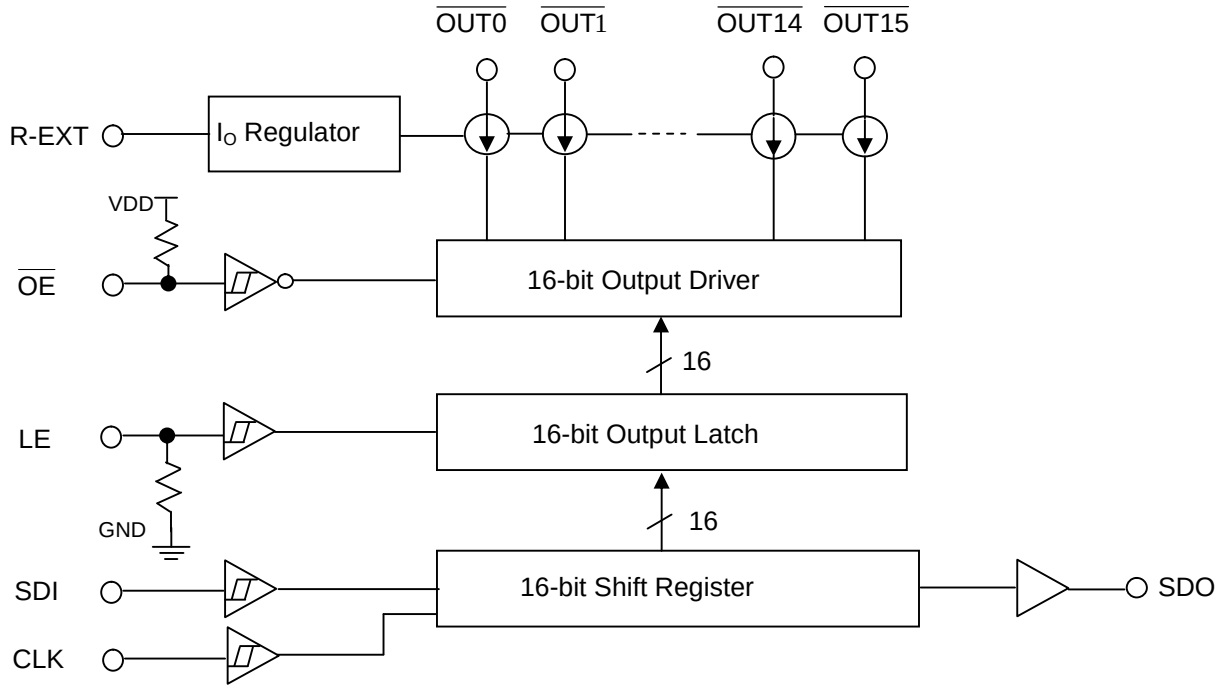

Terminal Description

Pin No.	Pin Name	Function
1	GND	Ground terminal for control logic and current sink
2	SDI	Serial-data input to the shift register
3	CLK	Clock input terminal for data shift on rising edge
4	LE	Data strobe input terminal Serial data is transferred to the output latch when LE is high. The data is latched when LE goes low.
5~20	$\overline{OUT0}$ ~ $\overline{OUT15}$	Constant current output terminals
21	$\overline{OE}$	Output enable terminal When (active) low, the output drivers are enabled; when high, all output drivers are turned OFF (blanked).
22	SDO	Serial-data output to the following SDI of next driver IC
23	R-EXT	Input terminal used to connect an external resistor for setting up output current for all output channels
24	VDD	3.5V / 5V supply voltage terminal

Pin Configuration

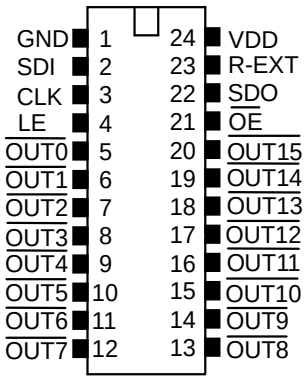

Equivalent Circuits of Inputs and Outputs

$\overline{OE}$ terminal

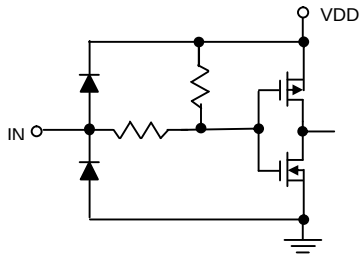

LE terminal

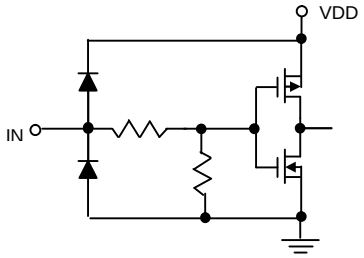

CLK, SDI terminal

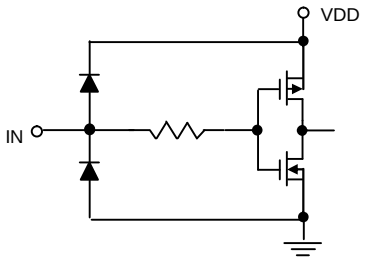

SDO terminal

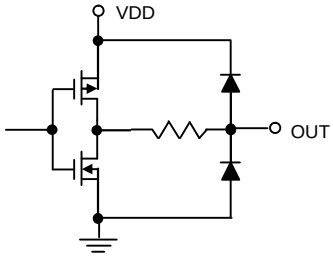

Timing Diagram

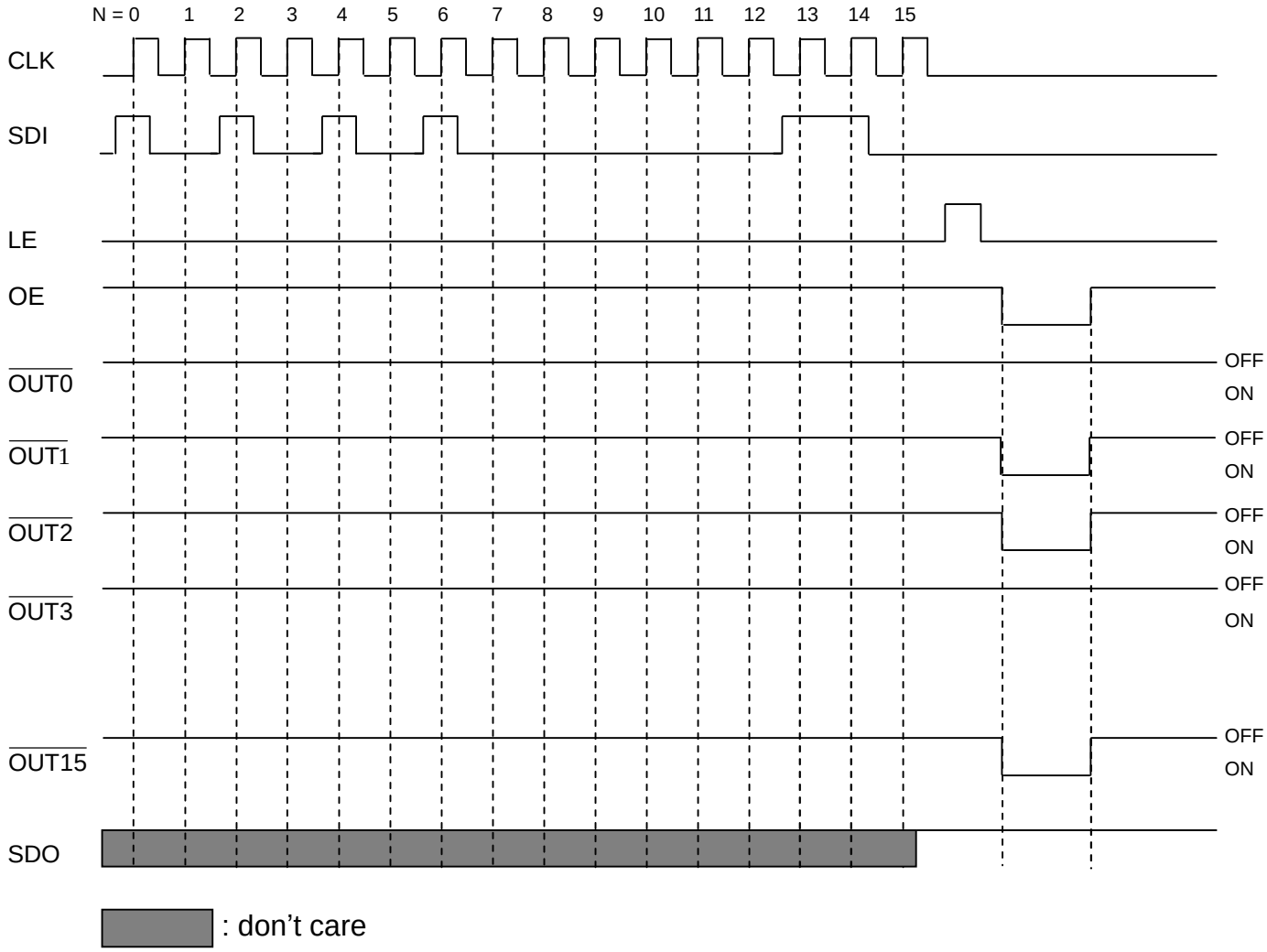

Truth Table

CLK	LE	$\overline{OE}$	SDI	$\overline{OUT0}$ ... $\overline{OUT7}$ ... $\overline{OUT15}$	SDO
↑	H	L	D_n	$\overline{D_n}$ ..... $\overline{D_{n-7}}$ .... $\overline{D_{n-15}}$	D_{n-15}
↑	L	L	D_{n+1}	No Change	D_{n-14}
↑	H	L	D_{n+2}	$\overline{D_{n+2}}$ .... $\overline{D_{n-5}}$ .... $\overline{D_{n-13}}$	D_{n-13}
↓	X	L	D_{n+3}	$\overline{D_{n+2}}$ .... $\overline{D_{n-5}}$ .... $\overline{D_{n-13}}$	D_{n-13}
↓	X	H	D_{n+3}	Off	D_{n-13}

Maximum Ratings

Characteristic		Symbol	Rating	Unit
Supply Voltage		V_{DD}	0~7.0	V
Input Voltage		V_{IN}	-0.4~V_{DD} + 0.4	V
Output Current		I_{OUT}	+50	mA
Output Voltage		V_{DS}	-0.5~+20.0	V
Clock Frequency		F_{CLK}	25	MHz
GND Terminal Current		I_{GND}	1440	mA
Operating Temperature		T_{opr}	-40~+85	°C
Storage Temperature		T_{stg}	-55~+150	°C
Thermal Resistance (On PCB, Ta=25°C)	CN – type	$R_{th(j-a)}$	53.82	°C/W
	CNS – type		66.74	
	CD– type		49.81	
	CF – type		59.01	
	CP – type		72.43	

Recommended Operating Conditions

Characteristic	Symbol	Condition	Min.	Typ.	Max.	Unit
Supply Voltage	V_{DD}	-	4.5	5.0	5.5	V
			3.0	3.3	3.6	
Output Voltage	V_{DS}	$\overline{OUT0}$ ~ $\overline{OUT15}$	-	-	17.0	V
Output Current	I_{OUT}	DC Test Circuit	3	-	35	mA
	I_{OH}	SDO	-	-	-1.0	mA
	I_{OL}	SDO	-	-	1.0	mA
Input Voltage	V_{IH}	CLK, $\overline{OE}$, LE and SDI	$0.8V_{DD}$	-	V_{DD}+0.3	V
	V_{IL}	CLK, $\overline{OE}$, LE and SDI	-0.3	-	$0.3V_{DD}$	V
LE Pulse Width	$t_{w(L)}$	V_{DD}=4.5~5.5V	40	-	-	ns
CLK Pulse Width	$t_{w(CLK)}$		20	-	-	ns
$\overline{OE}$ Pulse Width	$t_{w(OE)}$		400	-	-	ns
Setup Time for SDI	$t_{su(D)}$		5	-	-	ns
Hold Time for SDI	$t_{h(D)}$		10	-	-	ns
Setup Time for LE	$t_{su(L)}$		15	-	-	ns
Hold Time for LE	$t_{h(L)}$		15	-	-	ns
Clock Frequency	F_{CLK}	Cascade Operation	-	-	25.0	MHz

Electrical Characteristics

Characteristic		Symbol	Condition		Min.	Typ.	Max.	Unit
Input Voltage	"H" level	V_{IH}	Ta = -40~85ºC		$0.8V_{DD}$	-	V_{DD}	V
	"L" level	V_{IL}	Ta = -40~85ºC		GND	-	$0.3V_{DD}$	V
Output Leakage Current		I_{OH}	V_{OH}=17.0V		-	-	0.5	μA
Output Voltage	SDO	V_{OL}	I_{OL}=+1.0mA		-	-	0.4	V
		V_{OH}	I_{OH}=-1.0mA		4.6	-	-	V
Output Current 1		I_{OUT1}	V_{DS}=0.5V	R_{ext}=1260 Ω	-	15.0	-	mA
Current Skew		dI_{OUT1}	I_{OL}=15mA V_{DS}=0.5V	R_{ext}=1260 Ω	-	±1	±3	%
Output Current 2		I_{OUT2}	V_{DS}=0.8V	R_{ext}=620 Ω	-	30.0	-	mA
Current Skew		dI_{OUT2}	I_{OL}=30mA V_{DS}=0.8V	R_{ext}=620 Ω	-	±1	±3	%
Output Current vs. Output Voltage Regulation		$\%/dV_{DS}$	V_{DS} within 1.0V and 3.0V		-	±0.1	-	% / V
Output Current vs. Supply Voltage Regulation		$\%/dV_{DD}$	V_{DD} within 4.5V and 5.5V		-	±1	-	% / V
Pull-up Resistor		R_{IN}(up)	$\overline{OE}$		250	500	800	KΩ
Pull-down Resistor		R_{IN}(down)	LE		250	500	800	KΩ
Supply Current	"OFF"	I_{DD}(off) 1	R_{ext}=Open,	$\overline{OUT0}$ ~ $\overline{OUT15}$ =Off	-	9	-	mA
		I_{DD}(off) 2	R_{ext}=1260 Ω,	$\overline{OUT0}$ ~ $\overline{OUT15}$ =Off	-	10	-	
		I_{DD}(off) 3	R_{ext}=620 Ω,	$\overline{OUT0}$ ~ $\overline{OUT15}$ =Off	-	11	-	
	"ON"	I_{DD}(on) 1	R_{ext}=1260 Ω,	$\overline{OUT0}$ ~ $\overline{OUT15}$ =On	-	10	-	
		I_{DD}(on) 2	R_{ext}=620 Ω,	$\overline{OUT0}$ ~ $\overline{OUT15}$ =On	-	11	-	

Test Circuit for Electrical Characteristics

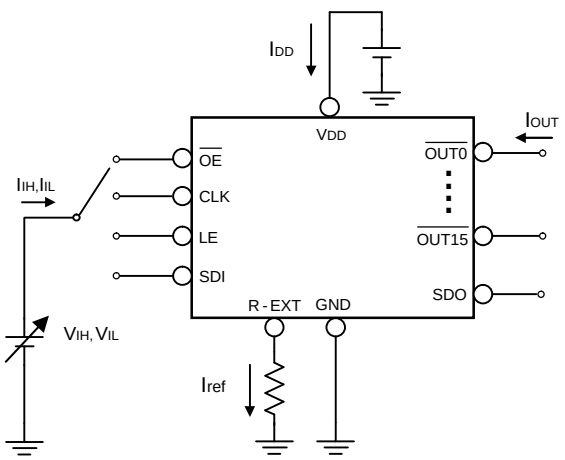

Switching Characteristics

Characteristic		Symbol	Condition	Min.	Typ.	Max.	Unit
Propagation Delay Time ("L" to "H")	CLK - $\overline{OUTn}$	t_{pLH1}	V_{DD}=5.0 V V_{DS}=0.8 V V_{IH}=V_{DD} V_{IL}=GND R_{ext}=300 Ω V_L=4.0 V R_L=52 Ω C_L=10 pF	-	50	100	ns
	LE - $\overline{OUTn}$	t_{pLH2}		-	50	100	ns
	$\overline{OE}$ - $\overline{OUTn}$	t_{pLH3}		-	20	100	ns
	CLK - SDO	t_{pLH}		15	20	-	ns
Propagation Delay Time ("H" to "L")	CLK - $\overline{OUTn}$	t_{pHL1}		-	100	150	ns
	LE - $\overline{OUTn}$	t_{pHL2}		-	100	150	ns
	$\overline{OE}$ - $\overline{OUTn}$	t_{pHL3}		-	50	150	ns
	CLK - SDO	t_{pHL}		15	20	-	ns
Pulse Width	CLK	$t_{w(CLK)}$		20	-	-	ns
	LE	$t_{w(L)}$		20	-	-	ns
	$\overline{OE}$	$t_{w(OE)}$		400	-	-	ns
Hold Time for LE		$t_{h(L)}$		5	-	-	ns
Setup Time for LE		$t_{su(L)}$		5	-	-	ns
Maximum CLK Rise Time		t_r**		-	-	500	ns
Maximum CLK Fall Time		t_f**		-	-	500	ns
Output Rise Time of Iout		t_{or}		-	70	200	ns
Output Fall Time of Iout		t_{of}		-	40	120	ns

※If the devices are connected in cascade and t_r or t_f is large, it may be critical to achieve the timing required for data transfer between two cascaded devices.

Test Circuit for Switching Characteristics

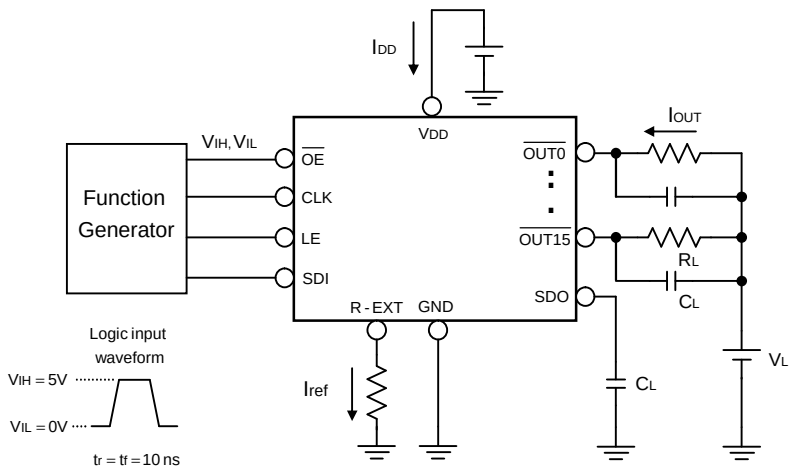

Timing Waveform

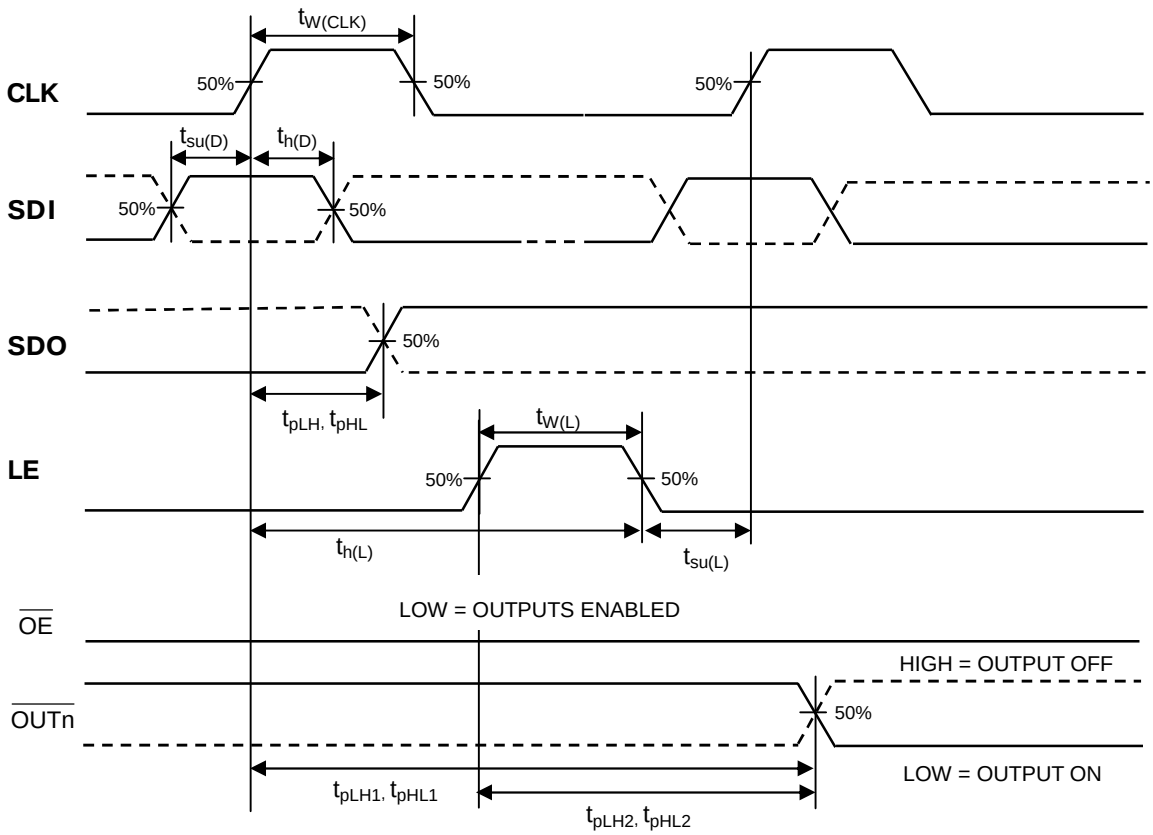

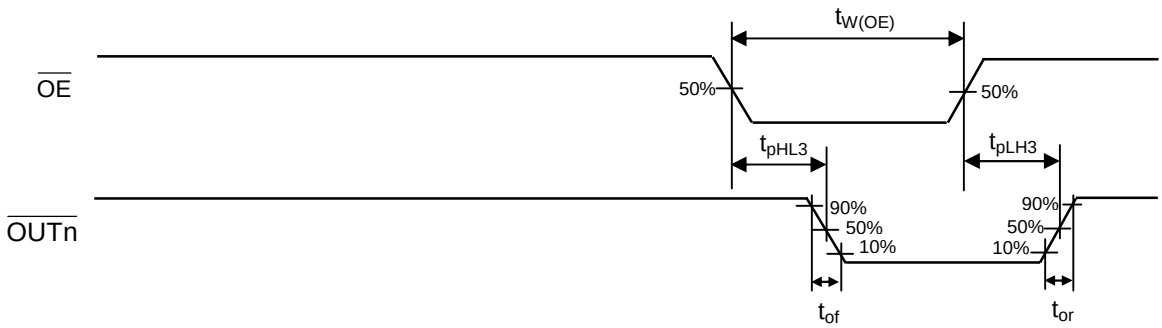

Application Information

Constant Current

To design LED displays, MBI5025 provides nearly no variations in current from channel to channel and from IC to IC. This can be achieved by:

1) The maximum current variation between channels is less than ±3%, and that between ICs is less than ±6%.
2) In addition, the current characteristic of output stage is flat and users can refer to the figure as shown below. The output current can be kept constant regardless of the variations of LED forward voltages (Vf). This performs as a perfection of load regulation.

Adjusting Output Current

The output current of each channel (I_{OUT}) is set by an external resistor, R_{ext}. The relationship between I_{out} and R_{ext} is shown in the following figure.

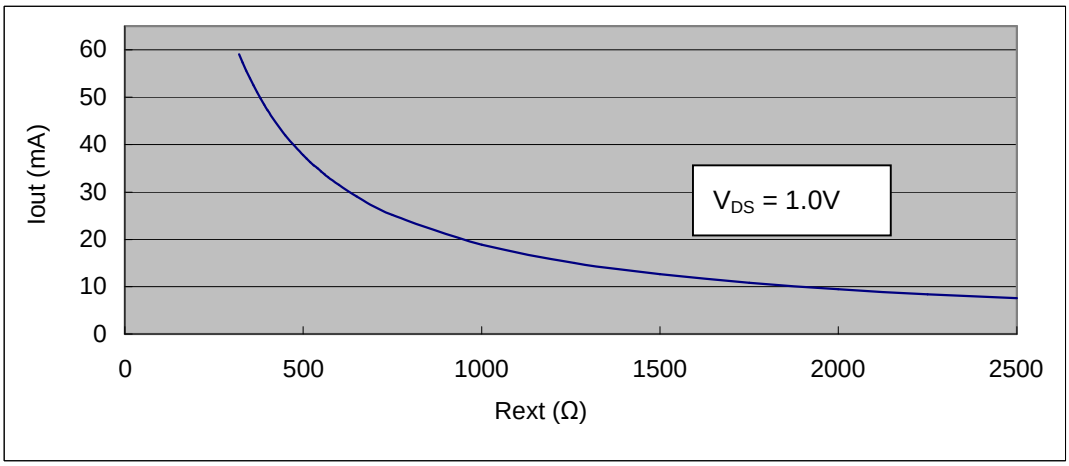

Resistance of the external resistor, R_{ext}, in Ω

Also, the output current can be calculated from the equation:

$V_{R\text{-}EXT}$ = 1.26V；I_{OUT} = ($V_{R\text{-}EXT}$ / R_{ext}) x 15

where R_{ext} is the resistance of the external resistor connected to R-EXT terminal and $V_{R\text{-}EXT}$ is the voltage of R-EXT terminal. The magnitude of current (as a function of R_{ext}) is around 30mA at 620Ω and 15mA at 1260Ω.

Package Power Dissipation (PD)

The maximum allowable package power dissipation is determined as $P_D(max) = (Tj – Ta) / R_{th(j-a)}$. When 16 output channels are turned on simultaneously, the actual package power dissipation is $P_D(act) = (I_{DD} \times V_{DD}) + (I_{OUT} \times Duty \times V_{DS} \times 16)$. Therefore, to keep $P_D(act) \leq P_D(max)$, the allowable maximum output current as a function of duty cycle is:

$I_{OUT} = \{ [(Tj – Ta) / R_{th(j-a)}] – (I_{DD} \times V_{DD}) \} / V_{DS} / Duty / 16$, where Tj = 150°C.

Load Supply Voltage (V_{LED})

MBI5025 are designed to operate with V_{DS} ranging from 0.4V to 0.8V (I_{OUT}=5~35mA) considering the package power dissipating limits. V_{DS} may be higher enough to make $P_{D(act)} > P_{D(max)}$ when V_{LED} = 5V and $V_{DS} = V_{LED} – Vf$, in which V_{LED} is the load supply voltage. In this case, it is recommended to use the lowest possible supply voltage or to set an external voltage reducer, V_{DROP}.

A voltage reducer lets $V_{DS} = (V_{LED} – Vf) – V_{DROP}$.

Resistors or Zener diode can be used in the applications as shown in the following figures.

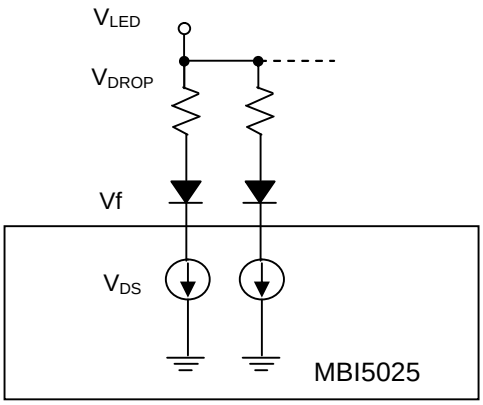

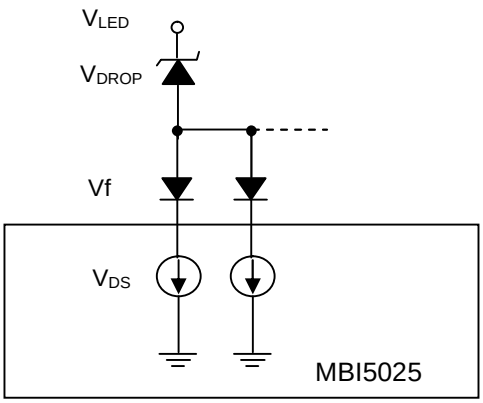

Package Outline

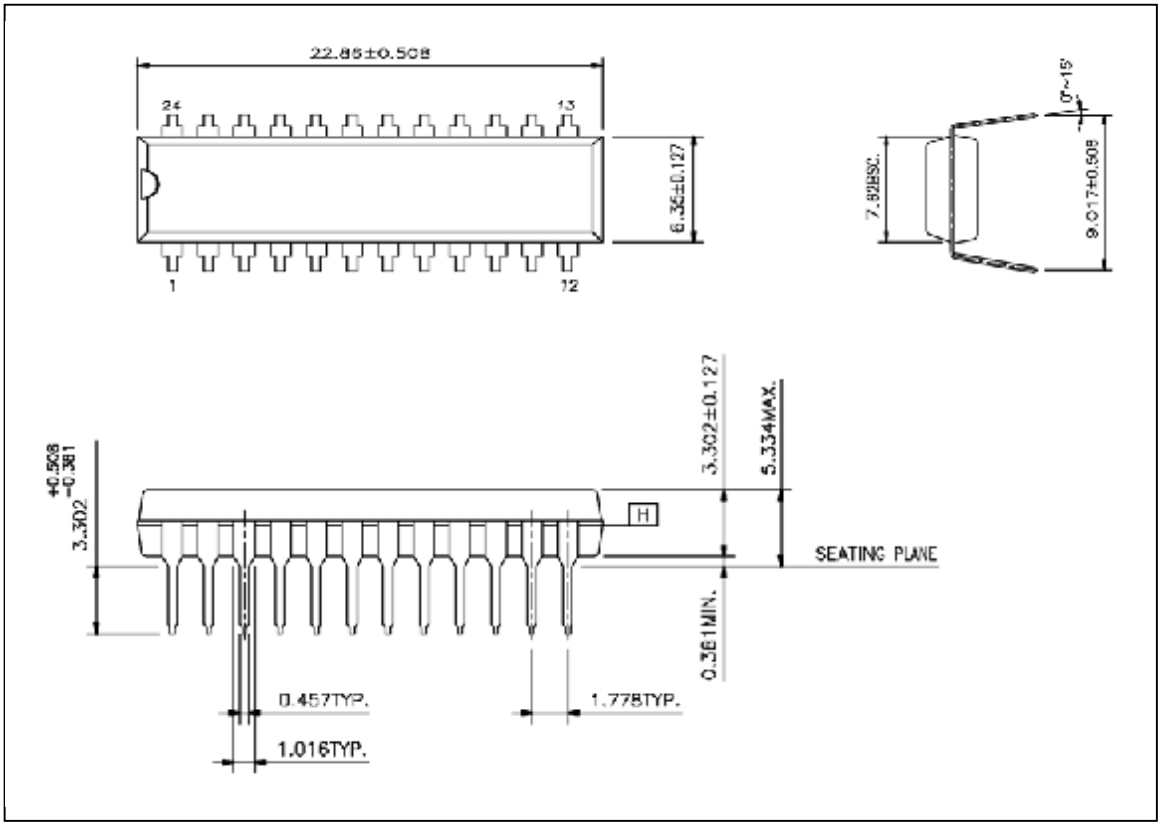

MBI5025CNS Outline Drawing

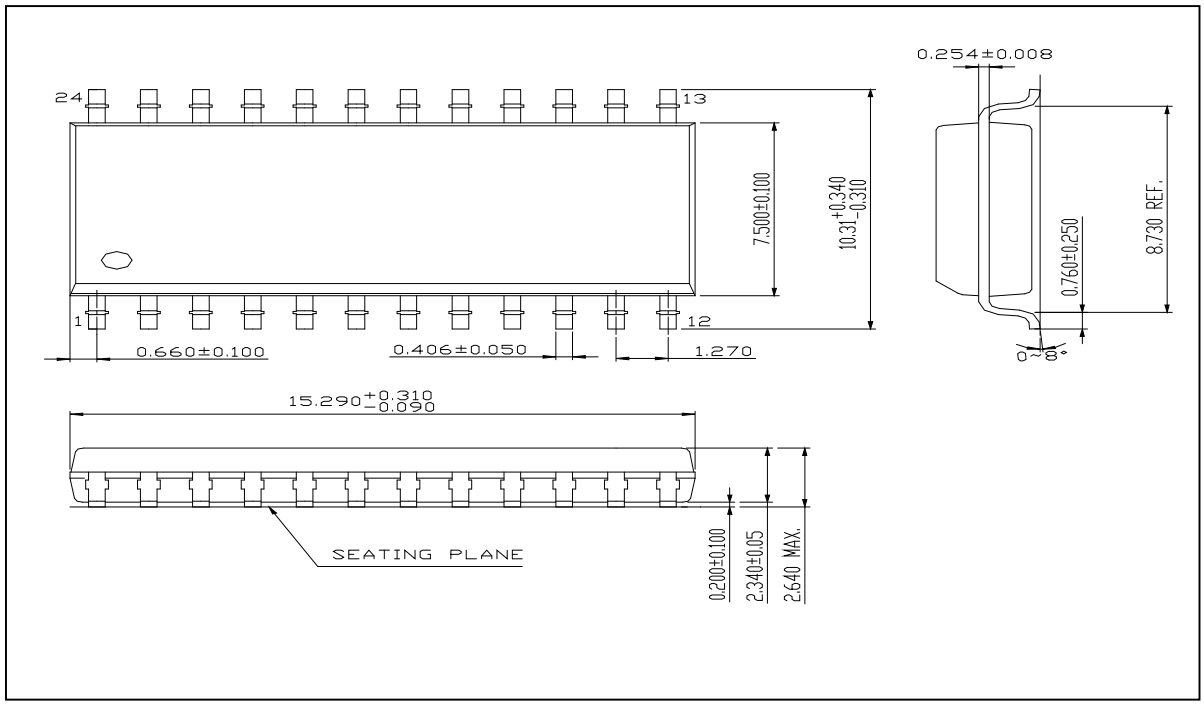

MBI5025CD Outline Drawing

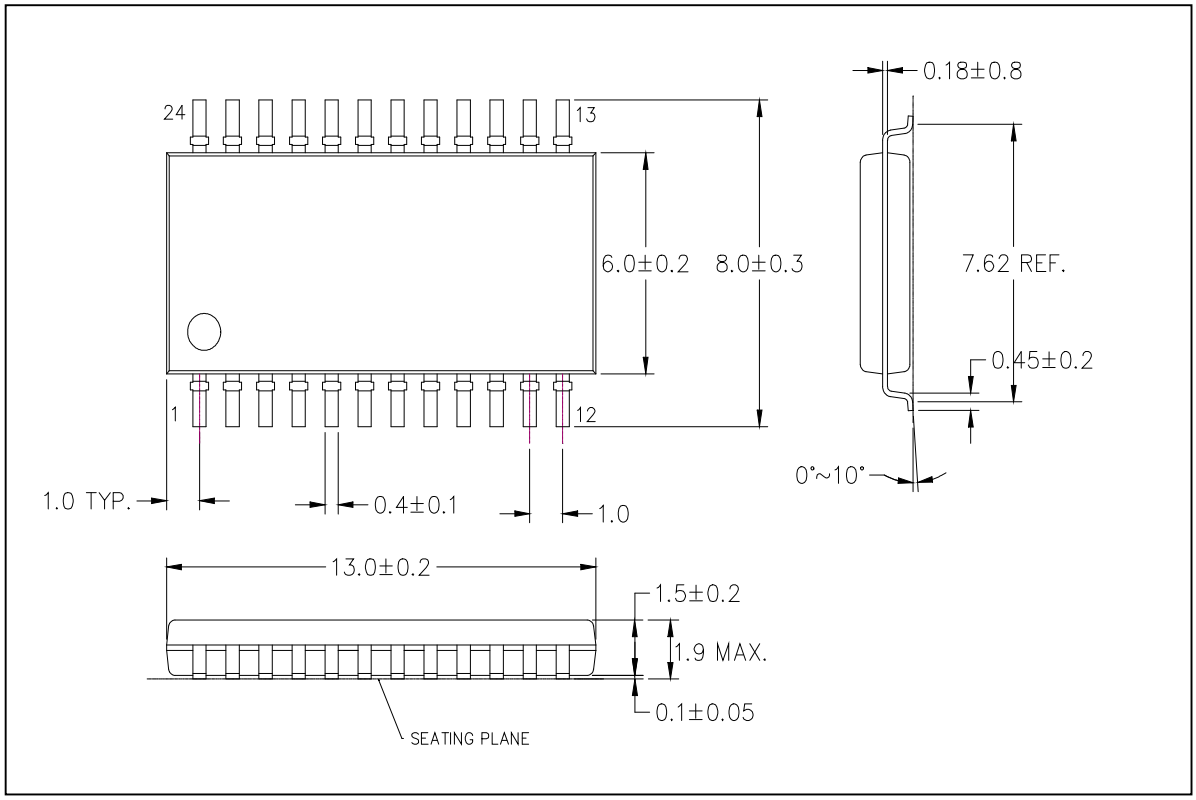

MBI5025CF Outline Drawing

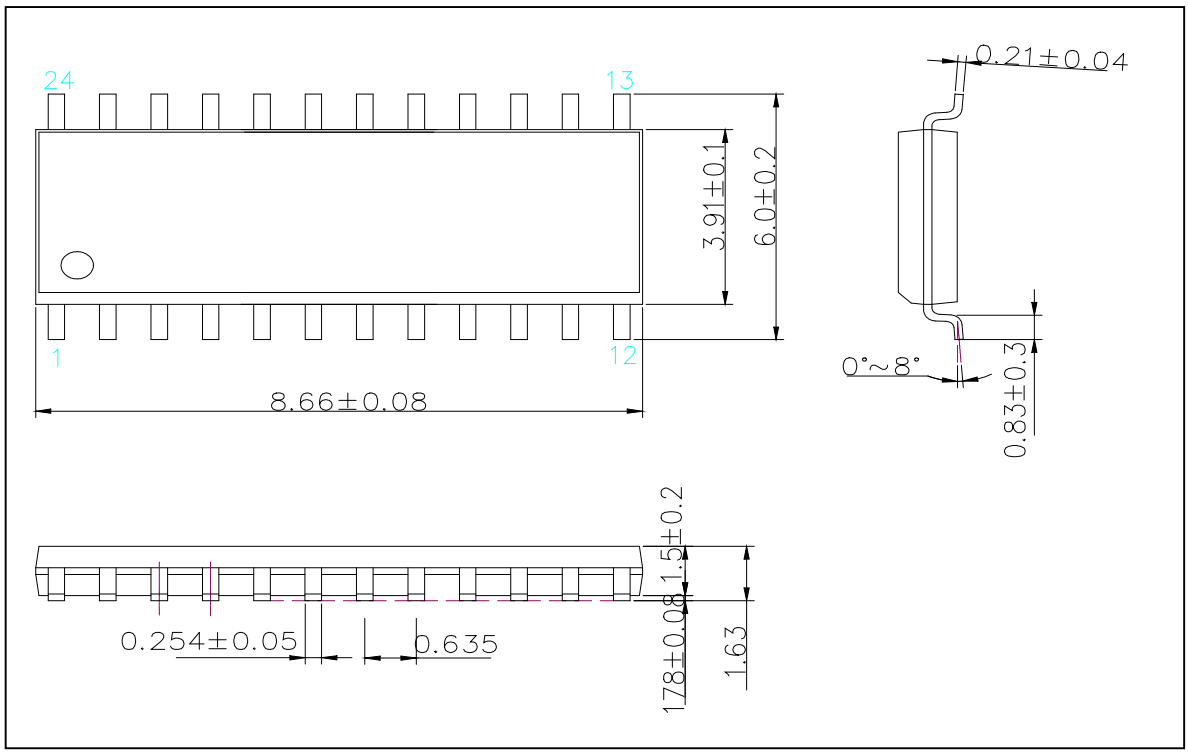

MBI5025CP Outline Drawing