MB9B460R Series

32-Bit ARM® Cortex® - MF FM4 Microcontroller

The MB9B460R Series are a highly integrated 32-bit microcontrollers dedicated for embedded controllers with high-performance and competitive cost.

These series are based on the ARM® Cortex®-M4F Processor with on-chip Flash memory and SRAM, and has peripheral functions such as Motor Control Timers, ADCs and Communication Interfaces (CAN, UART, CSIO, I^2C, LIN).

Features

32-bit ARM® Cortex®-M4F Core

- Processor version: r2p1
- Up to 160 MHz Frequency Operation
- FPU built-in
- Support DSP instruction
- Memory Protection Unit (MPU): improves the reliability of an embedded system
- Integrated Nested Vectored Interrupt Controller (NVIC): 1 NMI (non-maskable interrupt) and 128 peripheral interrupts and 16 priority levels
- 24-bit System timer (Sys Tick): System timer for OS task management

On-chip Memories

[Flash memory]

These series are based on two independent on-chip Flash memories.

- MainFlash memory
  - Up to 1024 Kbytes
  - Built-in Flash Accelerator System with 16 Kbytes trace buffer memory
  - The read access to Flash memory can be achieved without wait-cycle up to operation frequency of 72 MHz. Even at the operation frequency more than 72 MHz, an equivalent access to Flash memory can be obtained by Flash Accelerator System.
  - Security function for code protection
- WorkFlash memory
  - 32 Kbytes
  - Read cycle:
    - 6wait-cycle: the operation frequency more than 120 MHz, and up to 160 MHz
    - 4wait-cycle: the operation frequency more than 72 MHz, and up to 120 MHz
    - 2wait-cycle: the operation frequency more than 40 MHz, and up to 72 MHz
    - 0wait-cycle: the operation frequency up to 40MHz
  - Security function is shared with code protection

[SRAM]

This is composed of three independent SRAMs (SRAM0, SRAM1 and SRAM2). SRAM0 is connected to I-code bus or D-code bus of Cortex-M4F core. SRAM1 and SRAM2 are connected to System bus of Cortex-M4F core.

- SRAM0: Up to 64 Kbytes
- SRAM1: Up to 32 Kbytes
- SRAM2: Up to 32 Kbytes

External Bus Interface

- Supports SRAM, NOR, NAND Flash and SDRAM device
- Up to 9 chip selects CS0 to CS8 (CS8 is only for SDRAM)
- 8/16-bit Data width
- Up to 25-bit Address bit
- Supports Address/Data multiplex
- Supports external RDY function
- Supports scramble function
- Possible to set the validity/invalidity of the scramble function for the external areas 0x6000_0000 to 0xDFFF_FFFF in 4 Mbytes units.
- Possible to set two kinds of the scramble key
- Note: It is necessary to prepare the dedicated software library to use the scramble function.

CAN Interface (Max 2 channels)

- Compatible with CAN Specification 2.0A/B
- Maximum transfer rate: 1 Mbps
- Built-in 32 message buffer

Multi-function Serial Interface (Max 8 channels)

- 64 bytes with FIFO (the FIFO step numbers are variable depending on the settings of the communication mode or bit length.)
- Operation mode is selectable from the followings for each channel.
  - UART
  - CSIO
  - LIN
  - I^2C

[UART]

- Full-duplex double buffer
- Selection with or without parity supported
- Built-in dedicated baud rate generator
- External clock available as a serial clock
- Hardware Flow control : Automatically control the transmission by CTS/RTS (only ch.4)
- Various error detect functions available (parity errors, framing errors, and overrun errors)

[CSIO]

- Full-duplex double buffer
- Built-in dedicated baud rate generator
- Overrun error detect function available
- Serial chip select function (ch.6 and ch.7 only)
- Supports high-speed SPI (ch.4 and ch.6 only)
- Data length 5 to 16-bit

[LIN]

- LIN protocol Rev.2.1 supported
- Full-duplex double buffer
- Master/Slave mode supported
- LIN break field generation (can change to 13 to 16-bit length)
- LIN break delimiter generation (can change to 1 to 4-bit length)
- Various error detect functions available (parity errors, framing errors, and overrun errors)

[I^2C]

- Standard mode (Max 100 kbps) / High-speed mode (Max 400 kbps) supported
- Fast mode Plus (Fm+) (Max 1000 kbps, only for ch.3=ch.A and ch.7=ch.B) supported

DMA Controller (8 channels)

DMA Controller has an independent bus for CPU, so CPU and DMA Controller can process simultaneously.

- 8 independently configured and operated channels
- Transfer can be started by software or request from the built-in peripherals
- Transfer address area: 32-bit (4 Gbytes)
- Transfer mode: Block transfer/Burst transfer/Demand transfer
- Transfer data type: bytes/half-word/word
- Transfer block count: 1 to 16
- Number of transfers: 1 to 65536

DSTC (Descriptor System data Transfer Controller) (128 channels)

The DSTC can transfer data at high-speed without going via the CPU. The DSTC adopts the Descriptor system and, following the specified contents of the Descriptor which has already been constructed on the memory, can access directly the memory /peripheral device and performs the data transfer operation.

It supports the software activation, the hardware activation and the chain activation functions.

A/D Converter (Max 24 channels)

[12-bit A/D Converter]

- Successive Approximation type
- Built-in 3 units
- Conversion time: 0.5µs @ 5V
- Priority conversion available (priority at 2levels)
- Scanning conversion mode
- Built-in FIFO for conversion data storage (for SCAN conversion: 16steps, for Priority conversion: 4steps)

DA converter (Max 2 channels)

- R-2R type
- 12-bit resolution

Base Timer (Max 8 channels)

Operation mode is selectable from the followings for each channel.

- 16-bit PWM timer
- 16-bit PPG timer
- 16/32-bit reload timer
- 16/32-bit PWC timer

General Purpose I/O Port

This series can use its pins as general purpose I/O ports when they are not used for external bus or peripherals. Moreover, the port relocate function is built in. It can set which I/O port the peripheral function can be allocated.

- Capable of pull-up control per pin
- Capable of reading pin level directly
- Built-in the port relocate function
- Up to 100 high-speed general-purpose I/O ports @ 120pin Package
- Some pin is 5V tolerant I/O.
- See "Pin Description" and "I/O Circuit Type" for the corresponding pins.

Multi-function Timer (Max 2 units)

The Multi-function timer is composed of the following blocks.

Minimum resolution : 6.25 ns

- 16-bit free-run timer × 3ch./unit
- Input capture × 4ch./unit
- Output compare × 6ch./unit
- A/D activation compare × 6ch./unit
- Waveform generator × 3ch./unit
- 16-bit PPG timer × 3ch./unit

The following function can be used to achieve the motor control.

- PWM signal output function
- DC chopper waveform output function
- Dead time function
- Input capture function
- A/D convertor activate function
- DTIF (Motor emergency stop) interrupt function

Real-time clock (RTC)

The Real-time clock can count Year/Month/Day/Hour/Minute/Second/A day of the week from 01 to 99.

- Interrupt function with specifying date and time (Year/Month/Day/Hour/Minute/Second/A day of the week.) is available. This function is also available by specifying only Year, Month, Day, Hour or Minute.
- Timer interrupt function after set time or each set time.
- Capable of rewriting the time with continuing the time count.
- Leap year automatic count is available.

Quadrature Position/Revolution Counter (QPRC) (Max 2 channels)

The Quadrature Position/Revolution Counter (QPRC) is used to measure the position of the position encoder. Moreover, it is possible to use up/down counter.

- The detection edge of the three external event input pins AIN, BIN and ZIN is configurable.
- 16-bit position counter
- 16-bit revolution counter
- Two 16-bit compare registers

Dual Timer (32/16-bit Down Counter)

The Dual Timer consists of two programmable 32/16-bit down counters.
Operation mode is selectable from the followings for each channel.

- Free-running
- Periodic (=Reload)
- One-shot

Watch Counter

The Watch counter is used for wake up from the low-power consumption mode. It is possible to select the main clock, sub clock, built-in high-speed CR clock or built-in low-speed CR clock as the clock source.

Interval timer: up to 64s (Max) @ Sub Clock : 32.768 kHz

External Interrupt Controller Unit

- External interrupt input pin: Max 16 pins
- Include one non-maskable interrupt (NMI)

Watchdog Timer (2 channels)

A watchdog timer can generate interrupts or a reset when a time-out value is reached.

This series consists of two different watchdogs, a "Hardware" watchdog and a "Software" watchdog.

"Hardware" watchdog timer is clocked by low-speed internal CR oscillator. Therefore, "Hardware" watchdog is active in any power saving mode except STOP.

CRC (Cyclic Redundancy Check) Accelerator

The CRC accelerator helps a verify data transmission or storage integrity.

CCITT CRC16 and IEEE-802.3 CRC32 are supported.

- CCITT CRC16 Generator Polynomial: 0x1021
- IEEE-802.3 CRC32 Generator Polynomial: 0x04C11DB7

SD Card Interface

It is possible to use the SD card that conforms to the following standards.

- Part 1 Physical Layer Specification version 3.01
- Part E1 SDIO Specification version 3.00
- Part A2 SD Host Controller Standard Specification version 3.00
- 1-bit or 4-bit data bus

Clock and Reset

[Clocks]

Five clock sources (2 external oscillators, 2 internal CR oscillator, and Main PLL) that are dynamically selectable.

- Main clock : 4 MHz to 48 MHz
- Sub Clock : 32.768 kHz
- High-speed internal CR Clock : 4 MHz
- Low-speed internal CR Clock : 100 kHz
- Main PLL Clock

[Resets]

- Reset requests from INITX pin
- Power on reset
- Software reset
- Watchdog timers reset
- Low voltage detector reset
- Clock supervisor reset

Clock Super Visor (CSV)

Clocks generated by internal CR oscillators are used to supervise abnormality of the external clocks.

- External OSC clock failure (clock stop) is detected, reset is asserted.
- External OSC frequency anomaly is detected, interrupt or reset is asserted.

Low-Voltage Detector (LVD)

This Series include 2-stage monitoring of voltage on the VCC pins. When the voltage falls below the voltage has been set, Low-Voltage Detector generates an interrupt or reset.

- LVD1: error reporting via interrupt
- LVD2: auto-reset operation

Low-power Consumption Mode

Six low-power consumption modes are supported.

- SLEEP
- TIMER
- RTC
- STOP
- Deep standby RTC (selectable from with/without RAM retention)
- Deep standby stop (selectable from with/without RAM retention)

VBAT

The consumption power during the RTC operation can be reduced by supplying the power supply independent from the RTC (calendar circuit)/32 kHz oscillation circuit. The following circuits can also be used.

- RTC
- 32 kHz oscillation circuit
- Power-on circuit
- Back up register : 32 bytes
- Port circuit

Debug

- Serial Wire JTAG Debug Port (SWJ-DP)
- Embedded Trace Macrocells (ETM) provide comprehensive debug and trace facilities.

Unique ID

Unique value of the device (41-bit) is set.

Power Supply

- Three Power Supplies
- Wide range voltage : VCC = 2.7V to 5.5V
- Power supply for VBAT : VBAT = 2.7V to 5.5V

Contents

1. Product Lineup 7
2. Packages 9
3. Pin Assignment 10
4. Pin Description 16
5. I/O Circuit Type 45
6. Handling Precautions 53
6.1 Precautions for Product Design 53
6.2 Precautions for Package Mounting 54
6.3 Precautions for Use Environment 55
7. Handling Devices 56
8. Block Diagram 59
9. Memory Size 60
9.1 Memory Map 60
10. Pin Status in Each CPU State 63
11. Electrical Characteristics 71
11.1 Absolute Maximum Ratings 71
11.2 Recommended Operating Conditions 72
11.3 DC Characteristics 75
11.3.1 Current Rating 75
11.3.2 Pin Characteristics 83
11.4 AC Characteristics 85
11.4.1 Main Clock Input Characteristics 85
11.4.2 Sub Clock Input Characteristics 86
11.4.3 Built-in CR Oscillation Characteristics 86
11.4.4 Operating Conditions of Main PLL (In the case of using main clock for input clock of PLL) 87
11.4.5 Operating Conditions of Main PLL (In the case of using built-in high-speed CR clock for input clock of main PLL) 87
11.4.6 Reset Input Characteristics 87
11.4.7 Power-on Reset Timing 88
11.4.8 GPIO Output Characteristics 88
11.4.9 External Bus Timing 89
11.4.10 Base Timer Input Timing 102
11.4.11 UART Timing 103
11.4.12 External Input Timing 136
11.4.13 Quadrature Position/Revolution Counter Timing 137
11.4.14 I^2C Timing 139
11.4.15 SD Card Interface Timing 142
11.4.16 ETM Timing 144
11.4.17 JTAG Timing 145
11.5 12-bit A/D Converter 146
11.6 12-bit D/A Converter 149
11.7 Low-Voltage Detection Characteristics 150
11.7.1 Low-Voltage Detection Reset 150
11.7.2 Interrupt of Low-Voltage Detection 150
11.8 MainFlash Memory Write/Erase Characteristics 151
11.9 WorkFlash Memory Write/Erase Characteristics 151
11.10 Standby Recovery Time 152

11.10.1 Recovery cause: Interrupt/WKUP 152
11.10.2 Recovery cause: Reset 154
12. Ordering Information 156
13. Package Dimensions 157
14. Major Changes 164
Document History 165

1. Product Lineup

■Memory Size

Product name		MB9BF466M/N/R	MB9BF467M/N/R	MB9BF468M/N/R
MainFlash memory		512 Kbytes	768 Kbytes	1024 Kbytes
WorkFlash memory		32 Kbytes	32 Kbytes	32 Kbytes
On-chip SRAM		64 Kbytes	96 Kbytes	128 Kbytes
	SRAM0	32 Kbytes	48 Kbytes	64 Kbytes
	SRAM1	16 Kbytes	24 Kbytes	32 Kbytes
	SRAM1	16 Kbytes	24 Kbytes	32 Kbytes

■Function

Product name			MB9BF466M MB9BF467M MB9BF468M	MB9BF466N MB9BF467N MB9BF468N	MB9BF466R MB9BF467R MB9BF468R
Pin count			80	100/112	120/144
CPU			Cortex-M4F, MPU, NVIC 128ch.		
	Freq.		160 MHz		
Power supply voltage range			2.7V to 5.5V		
CAN			2ch. (Max)		
DMAC			8ch.		
DSTC			128ch.		
External Bus Interface			Addr:19-bit (Max), R/W data: 8-bit (Max), CS:5 (Max), SRAM, NOR Flash	Addr:25-bit (Max), R/W data: 8/16-bit (Max), CS:9 (Max), SRAM, NOR Flash, SDRAM	Addr:25-bit (Max), R/W data: 8/16-bit (Max), CS:9 (Max), SRAM, NOR Flash, NAND Flash, SDRAM
Multi-function Serial Interface (UART/CSIO/LIN/I^{2}C)			8ch. (Max)		
Base Timer (PWC/Reload timer/PWM/PPG)			8ch. (Max)		
MF Timer	A/D activation compare	6ch.	2 units (Max)		
	Input capture	4ch.			
	Free-run timer	3ch.			
	Output compare	6ch.			
	Waveform generator	3ch.			
	PPG	3ch.			
SD Card Interface			1 unit		
QPRC			2ch. (Max)		
Dual Timer			1 unit		
Real-Time Clock			1 unit		
Watch Counter			1 unit		
CRC Accelerator			Yes		
Watchdog Timer			1ch. (SW) + 1ch. (HW)		
External Interrupts			16pins (Max) + NMI × 1		
I/O Ports			63pins (Max)	80pins (Max)	100pins (Max)
12-bit A/D Converter			16ch. (3 units)	24ch. (3 units)	
12-bit D/A Converter			2 units (Max)		
CSV (Clock Super Visor)			Yes		
LVD (Low-Voltage Detector)			2ch.		
Built-in CR	High-speed		4 MHz (±2%)		
	Low-speed		100 kHz (Typ)		
Debug Function			SWJ-DP/ETM		
Unique ID			Yes		

Note: All signals of the peripheral function in each product cannot be allocated by limiting the pins of package. It is necessary to use the port relocate function of the I/O port according to your function use.

2. Packages

Package \ Product name	MB9BF466M MB9BF467M MB9BF468M	MB9BF466N MB9BF467N MB9BF468N	MB9BF466R MB9BF467R MB9BF468R
LQFP: FPT-80P-M37 (0.5mm pitch)	❍	-	-
LQFP: FPT-80P-M40 (0.65mm pitch)	❍	-	-
QFP: FPT-100P-M36 (0.65mm pitch)	-	❍	-
LQFP: FPT-100P-M23 (0.5mm pitch)	-	❍	-
LQFP: FPT-120P-M37 (0.5mm pitch)	-	-	❍
BGA: BGA-112P-M05 (0.5mm pitch)	-	❍	-
BGA: BGA-144P-M09 (0.5mm pitch)	-	-	❍

❍ : Supported

Note : See "Package Dimensions" for detailed information on each package.

3. Pin Assignment

■FPT-80P-M37/M40

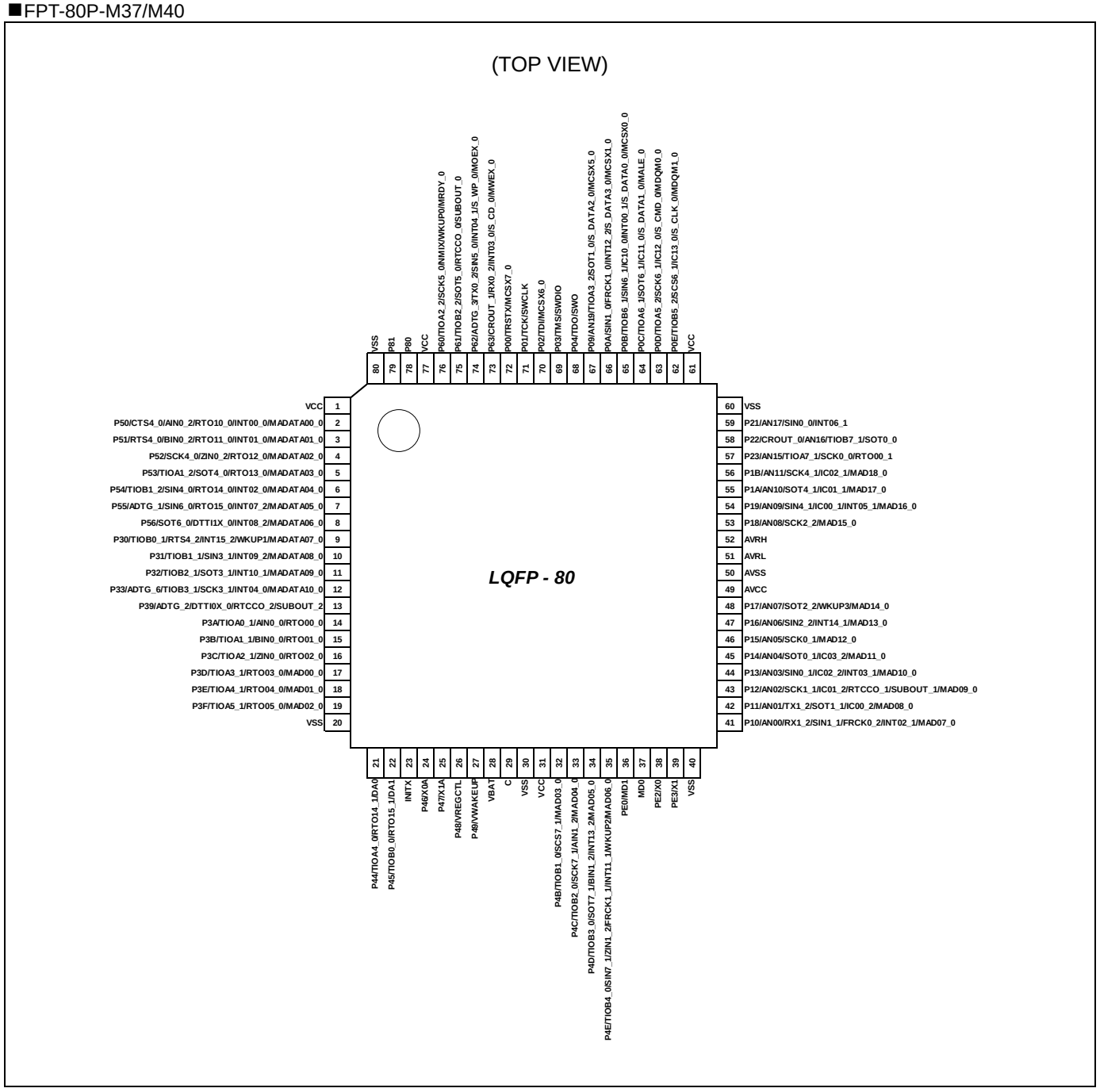

Note:

The number after the underscore ("_") in pin names such as XXX_1 and XXX_2 indicates the relocated port number. For these pins, there are multiple pins that provide the same function for the same channel. Use the extended port function register (EPFR) to select the pin.

■FPT-100P-M23

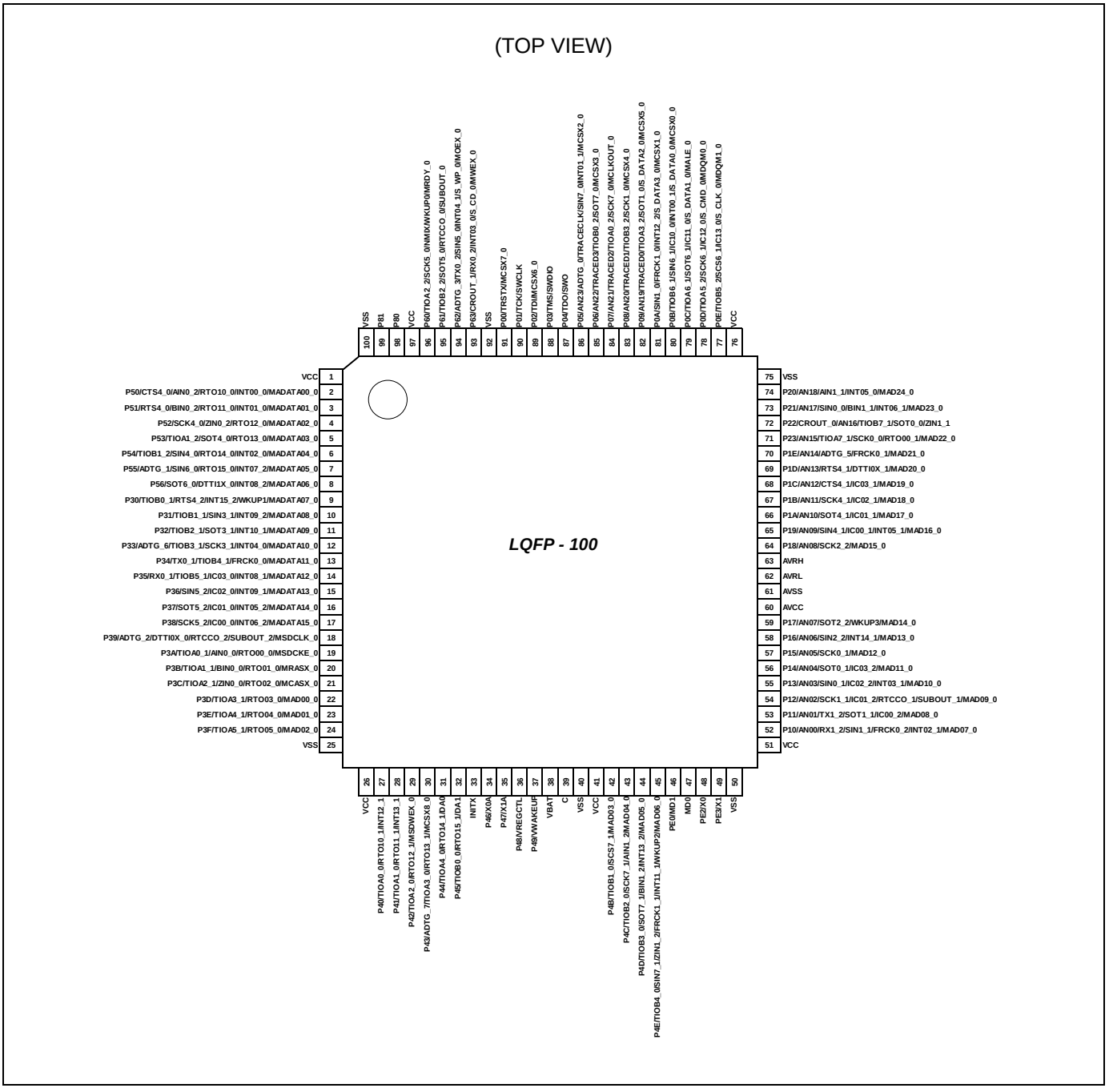

Note:

The number after the underscore ("_") in pin names such as XXX_1 and XXX_2 indicates the relocated port number. For these pins, there are multiple pins that provide the same function for the same channel. Use the extended port function register (EPFR) to select the pin.

■FPT-120P-M37

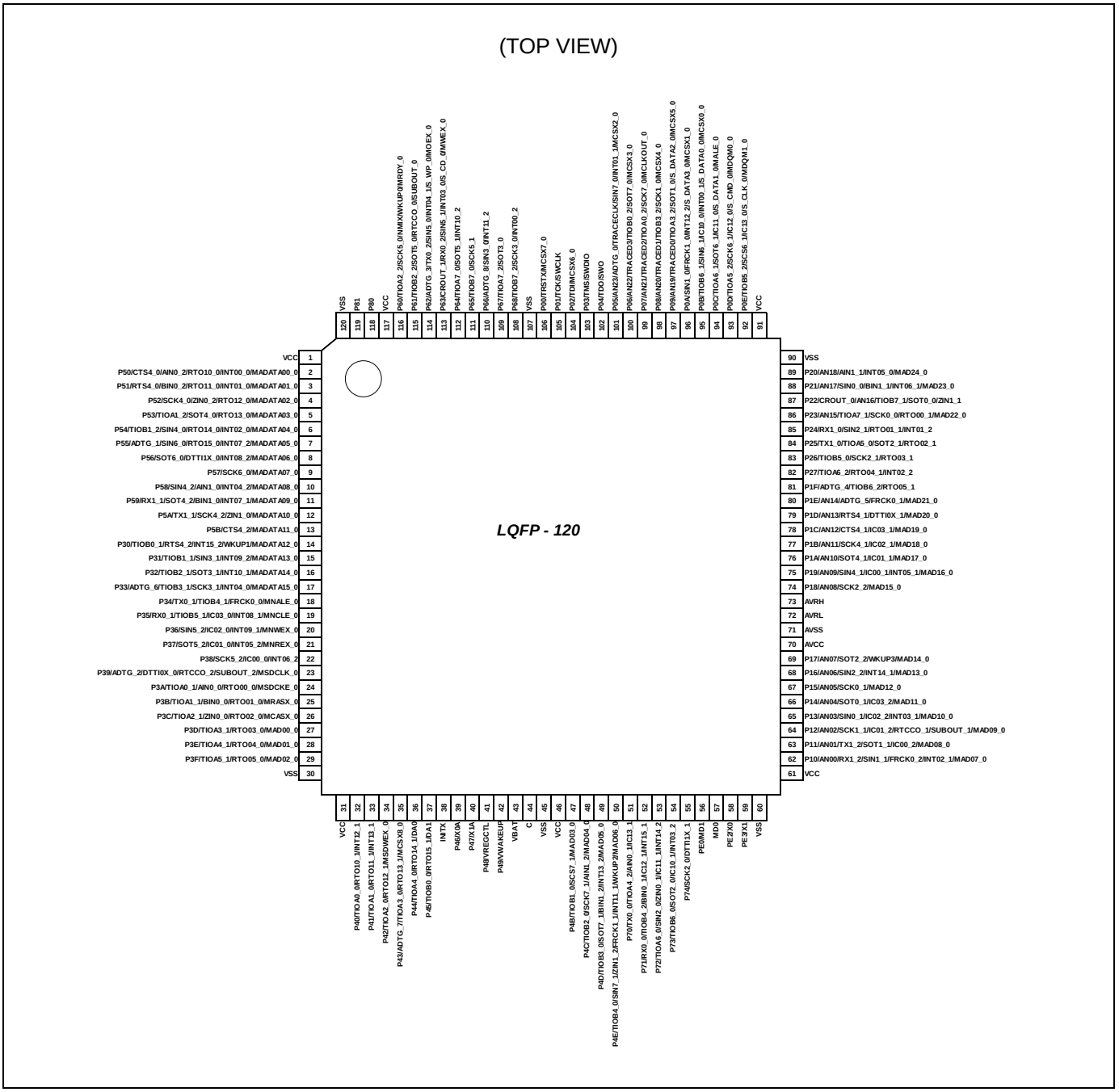

Note:

The number after the underscore ("_") in pin names such as XXX_1 and XXX_2 indicates the relocated port number. For these pins, there are multiple pins that provide the same function for the same channel. Use the extended port function register (EPFR) to select the pin.

■FPT-100P-M36

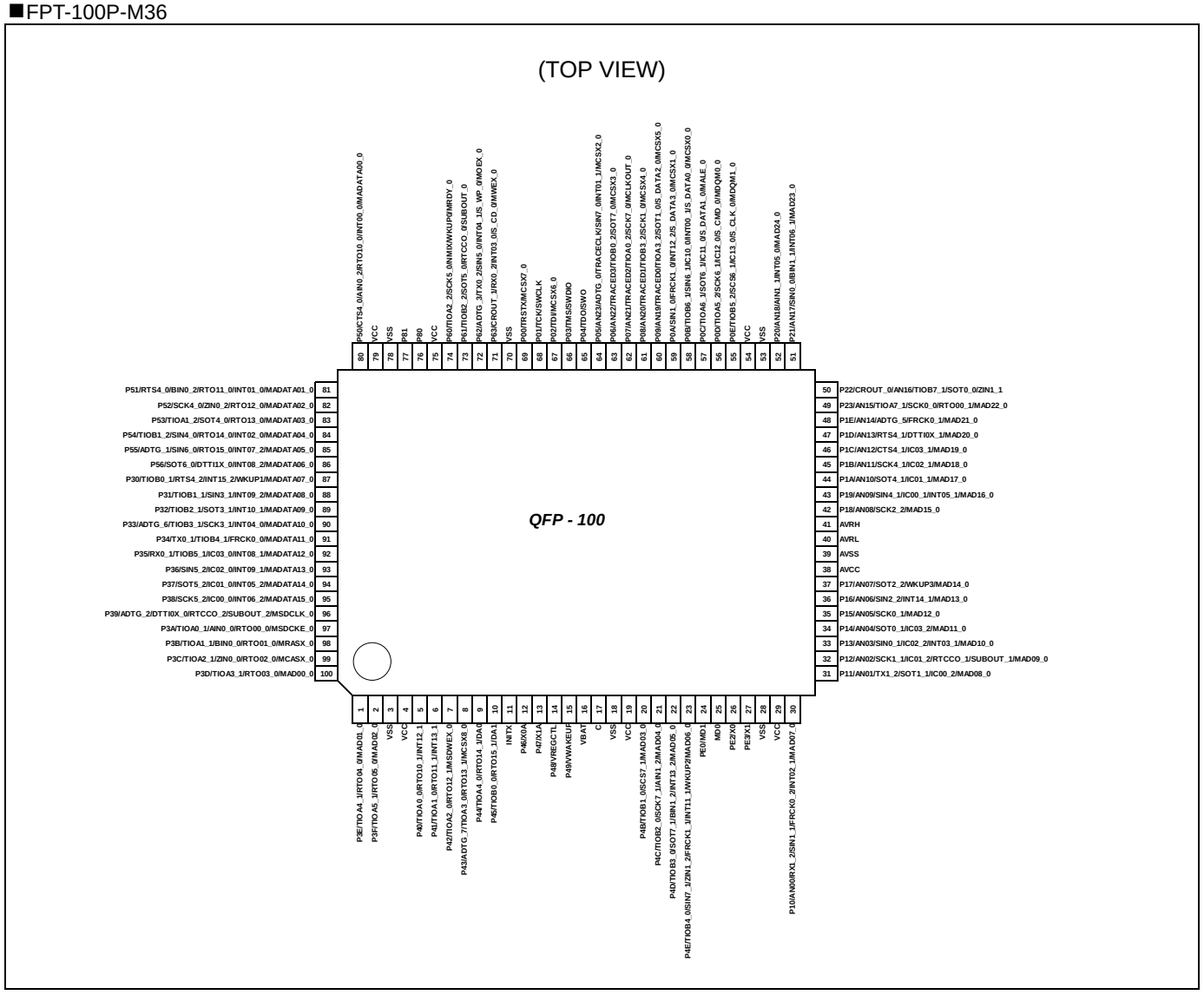

Note:

The number after the underscore ("_") in pin names such as XXX_1 and XXX_2 indicates the relocated port number. For these pins, there are multiple pins that provide the same function for the same channel. Use the extended port function register (EPFR) to select the pin.

■BGA-112P-M05

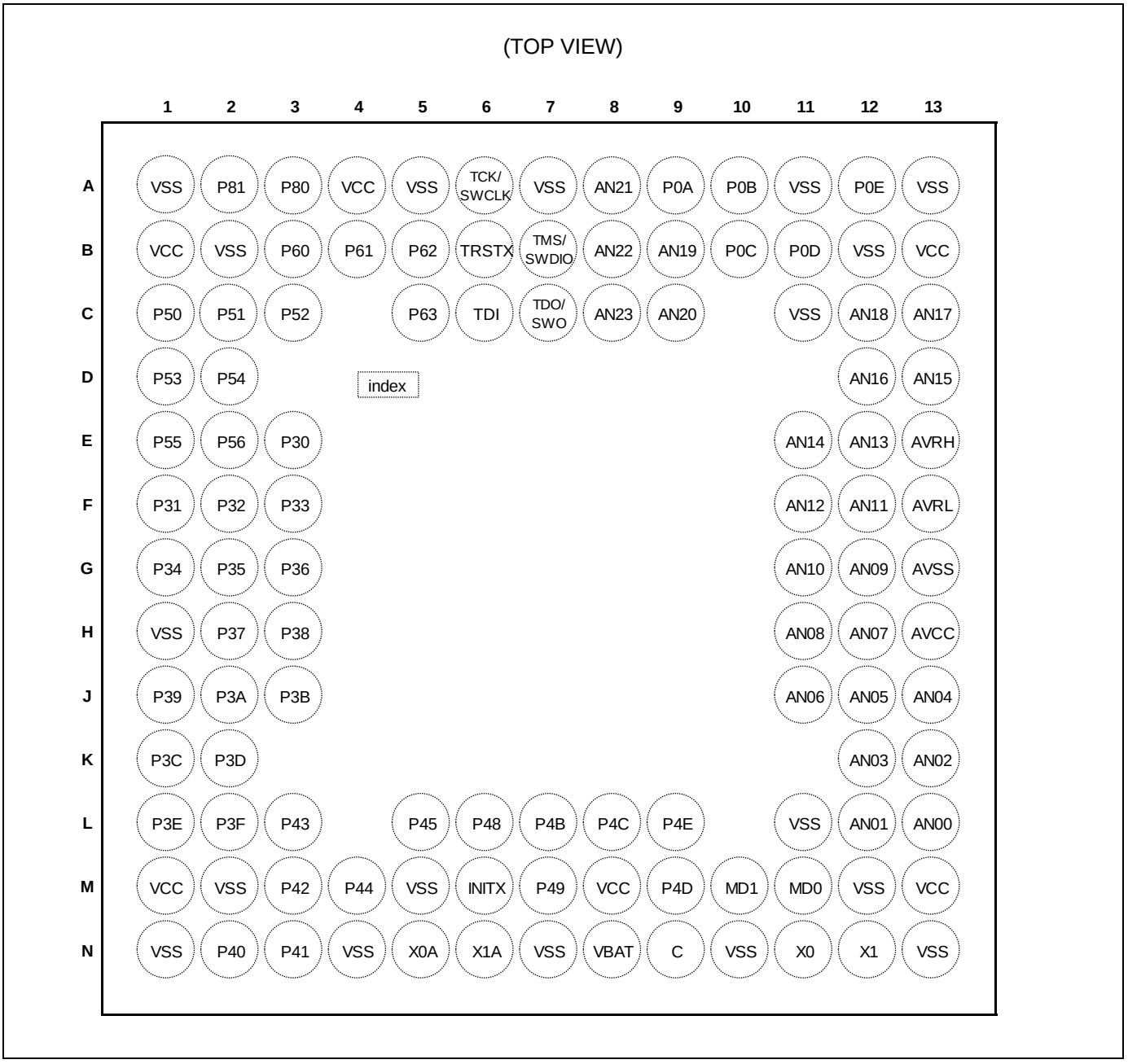

Note:

The number after the underscore ("_") in pin names such as XXX_1 and XXX_2 indicates the relocated port number. For these pins, there are multiple pins that provide the same function for the same channel. Use the extended port function register (EPFR) to select the pin.

■BGA-144P-M09

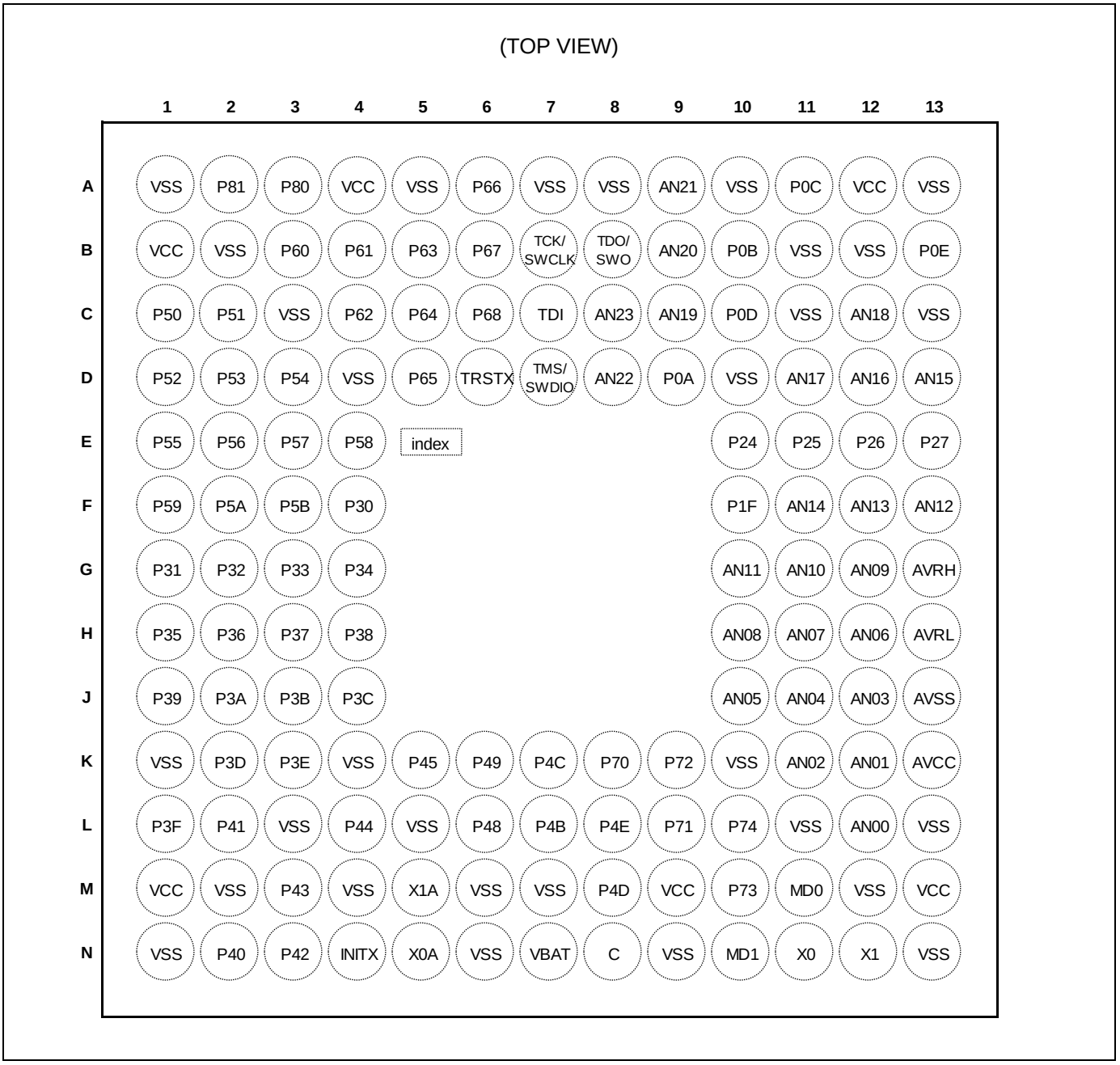

Note:

The number after the underscore ("_") in pin names such as XXX_1 and XXX_2 indicates the relocated port number. For these pins, there are multiple pins that provide the same function for the same channel. Use the extended port function register (EPFR) to select the pin.

4. Pin Description

■List of pin numbers

The number after the underscore ("_") in pin names such as XXX_1 and XXX_2 indicates the relocated port number. For these pins, there are multiple pins that provide the same function for the same channel. Use the extended port function register (EPFR) to select the pin

Pin No						Pin Name	I/O circuit type	Pin state type
LQFP120	LQFP100	LQFP80	QFP100	BGA112	BGA144			
1	1	1	79	B1	B1	VCC	-	-
2	2	2	80	C1	C1	P50 CTS4_0 AIN0_2 RTO10_0 (PPG10_0) INT00_0 MADATA00_0	E	K
3	3	3	81	C2	C2	P51 RTS4_0 BIN0_2 RTO11_0 (PPG10_0) INT01_0 MADATA01_0	E	K
4	4	4	82	C3	D1	P52 SCK4_0 (SCL4_0) ZIN0_2 RTO12_0 (PPG12_0) MADATA02_0	E	I
5	5	5	83	D1	D2	P53 TIOA1_2 SOT4_0 (SDA4_0) RTO13_0 (PPG12_0) MADATA03_0	E	I
6	6	6	84	D2	D3	P54 TIOB1_2 SIN4_0 RTO14_0 (PPG14_0) INT02_0 MADATA04_0	E	K
7	7	7	85	E1	E1	P55 ADTG_1 SIN6_0 RTO15_0 (PPG14_0) INT07_2 MADATA05_0	E	K

Pin No						Pin Name	I/O circuit type	Pin state type
LQFP120	LQFP100	LQFP80	QFP100	BGA112	BGA144			
8	8	8	86	E2	E2	P56 SOT6_0 (SDA6_0) DTTI1X_0 INT08_2 MADATA06_0	E	K
9	-	-	-	-	E3	P57 SCK6_0 (SCL6_0) MADATA07_0	E	I
10	-	-	-	-	E4	P58 SIN4_2 AIN1_0 INT04_2 MADATA08_0	E	K
11	-	-	-	-	F1	P59 RX1_1 SOT4_2 (SDA4_2) BIN1_0 INT07_1 MADATA09_0	E	K
12	-	-	-	-	F2	P5A TX1_1 SCK4_2 (SCL4_2) ZIN1_0 MADATA10_0	E	I
13	-	-	-	-	F3	P5B CTS4_2 MADATA11_0	E	I
14	9	9	87	E3	F4	P30 TIOB0_1 RTS4_2 INT15_2 WKUP1	E	Q
-					-	MADATA07_0		
14	-	-	-	-	F4	MADATA12_0		
15	10	10	88	F1	G1	P31 TIOB1_1 SIN3_1 INT09_2	I	K
-					-	MADATA08_0		
15	-	-	-	-	G1	MADATA13_0		

Pin No						Pin Name	I/O circuit type	Pin state type
LQFP120	LQFP100	LQFP80	QFP100	BGA112	BGA144			
16	11	11	89	F2	G2	P32 TIOB2_1 SOT3_1 (SDA3_1) INT10_1	N	K
-					-	MADATA09_0		
16	-	-	-	-	G2	MADATA14_0		
17	12	12	90	F3	G3	P33 ADTG_6 TIOB3_1 SCK3_1 (SCL3_1) INT04_0	N	K
-					-	MADATA10_0		
17	-	-	-	-	G3	MADATA15_0		
18	13	-	91	G1	G4	P34 TX0_1 TIOB4_1 FRCK0_0	E	I
-					-	MADATA11_0		
18	-	-	-	-	G4	MNALE_0		
19	14	-	92	G2	H1	P35 RX0_1 TIOB5_1 IC03_0 INT08_1	E	K
-					-	MADATA12_0		
19	-	-	-	-	H1	MNCLE_0		

Pin No						Pin Name	I/O circuit type	Pin state type
LQFP120	LQFP100	LQFP80	QFP100	BGA112	BGA144			
20	15	-	93	G3	H2	P36 SIN5_2 IC02_0 INT09_1	E	K
-					-	MADATA13_0		
20	-	-	-	-	H2	MNWEX_0		
21	16	-	94	H2	H3	P37 SOT5_2 (SDA5_2) IC01_0 INT05_2	E	K
-					-	MADATA14_0		
21	-	-	-	-	H3	MNREX_0		
22	17	-	95	H3	H4	P38 SCK5_2 (SCL5_2) IC00_0 INT06_2	E	K
-					-	MADATA15_0		
23	18	13	96	J1	J1	P39 ADTG_2 DTTI0X_0 RTCCO_2 SUBOUT_2	L	I
		-				MSDCLK_0		
24	19	14	97	J2	J2	P3A TIOA0_1 AIN0_0 RTO00_0 (PPG00_0)	G	I
		-				MSDCKE_0		
25	20	15	98	J3	J3	P3B TIOA1_1 BIN0_0 RTO01_0 (PPG00_0)	G	I
		-				MRASX_0		

Pin No						Pin Name	I/O circuit type	Pin state type
LQFP120	LQFP100	LQFP80	QFP100	BGA112	BGA144			
26	21	16	99	K1	J4	P3C TIOA2_1 ZIN0_0 RTO02_0 (PPG02_0)	G	I
		-				MCASX_0		
27	22	17	100	K2	K2	P3D TIOA3_1 RTO03_0 (PPG02_0) MAD00_0	G	I
28	23	18	1	L1	K3	P3E TIOA4_1 RTO04_0 (PPG04_0) MAD01_0	G	I
29	24	19	2	L2	L1	P3F TIOA5_1 RTO05_0 (PPG04_0) MAD02_0	G	I
30	25	20	3	N1	N1	VSS	-	-
31	26	-	4	M1	M1	VCC	-	-
32	27	-	5	N2	N2	P40 TIOA0_0 RTO10_1 (PPG10_1) INT12_1	G	K
33	28	-	6	N3	L2	P41 TIOA1_0 RTO11_1 (PPG10_1) INT13_1	G	K
34	29	-	7	M3	N3	P42 TIOA2_0 RTO12_1 (PPG12_1) MSDWEX_0	G	I
35	30	-	8	L3	M3	P43 ADTG_7 TIOA3_0 RTO13_1 (PPG12_1) MCSX8_0	G	I

Pin No						Pin Name	I/O circuit type	Pin state type
LQFP120	LQFP100	LQFP80	QFP100	BGA112	BGA144			
36	31	21	9	M4	L4	P44 TIOA4_0 RTO14_1 (PPG14_1) DA0	R	J
37	32	22	10	L5	K5	P45 TIOB0_0 RTO15_1 (PPG14_1) DA1	R	J
38	33	23	11	M6	N4	INITX	B	C
39	34	24	12	N5	N5	P46 X0A	P	S
40	35	25	13	N6	M5	P47 X1A	Q	T
41	36	26	14	L6	L6	P48 VREGCTL	O	U
42	37	27	15	M7	K6	P49 VWAKEUP	O	U
43	38	28	16	N8	N7	VBAT	-	-
44	39	29	17	N9	N8	C	-	-
45	40	30	18	N10	N9	VSS	-	-
46	41	31	19	M8	M9	VCC	-	-
47	42	32	20	L7	L7	P4B TIOB1_0 SCS7_1 MAD03_0	E	I
48	43	33	21	L8	K7	P4C TIOB2_0 SCK7_1 (SCL7_1) AIN1_2 MAD04_0	N	I
49	44	34	22	M9	M8	P4D TIOB3_0 SOT7_1 (SDA7_1) BIN1_2 INT13_2 MAD05_0	N	K
50	45	35	23	L9	L8	P4E TIOB4_0 SIN7_1 ZIN1_2 FRCK1_1 INT11_1 WKUP2 MAD06_0	I	Q

Pin No						Pin Name	I/O circuit type	Pin state type
LQFP120	LQFP100	LQFP80	QFP100	BGA112	BGA144			
51	-	-	-	-	K8	P70 TX0_0 TIOA4_2 AIN0_1 IC13_1	E	I
52	-	-	-	-	L9	P71 RX0_0 TIOB4_2 BIN0_1 IC12_1 INT15_1	E	K
53	-	-	-	-	K9	P72 TIOA6_0 SIN2_0 ZIN0_1 IC11_1 INT14_2	E	K
54	-	-	-	-	M10	P73 TIOB6_0 SOT2_0 (SDA2_0) IC10_1 INT03_2	E	K
55	-	-	-	-	L10	P74 SCK2_0 (SCL2_0) DTTI1X_1	E	I
56	46	36	24	M10	N10	PE0 MD1	C	E
57	47	37	25	M11	M11	MD0	J	D
58	48	38	26	N11	N11	PE2 X0	A	A
59	49	39	27	N12	N12	PE3 X1	A	B
60	50	40	28	N13	N13	VSS	-	-
61	51	-	29	M13	M13	VCC	-	-
62	52	41	30	L13	L12	P10 AN00 RX1_2 SIN1_1 FRCK0_2 INT02_1 MAD07_0	F	M

Pin No						Pin Name	I/O circuit type	Pin state type
LQFP120	LQFP100	LQFP80	QFP100	BGA112	BGA144			
63	53	42	31	L12	K12	P11 AN01 TX1_2 SOT1_1 (SDA1_1) IC00_2 MAD08_0	F	L
64	54	43	32	K13	K11	P12 AN02 SCK1_1 (SCL1_1) IC01_2 RTCCO_1 SUBOUT_1 MAD09_0	F	L
65	55	44	33	K12	J12	P13 AN03 SIN0_1 IC02_2 INT03_1 MAD10_0	F	M
66	56	45	34	J13	J11	P14 AN04 SOT0_1 (SDA0_1) IC03_2 MAD11_0	F	L
67	57	46	35	J12	J10	P15 AN05 SCK0_1 (SCL0_1) MAD12_0	F	L
68	58	47	36	J11	H12	P16 AN06 SIN2_2 INT14_1 MAD13_0	F	M
69	59	48	37	H12	H11	P17 AN07 SOT2_2 (SDA2_2) WKUP3 MAD14_0	F	P
70	60	49	38	H13	K13	AVCC	-	-
71	61	50	39	G13	J13	AVSS	-	-
72	62	51	40	F13	H13	AVRL	-	-
73	63	52	41	E13	G13	AVRH	-	-

Pin No						Pin Name	I/O circuit type	Pin state type
LQFP120	LQFP100	LQFP80	QFP100	BGA112	BGA144			
74	64	53	42	H11	H10	P18 AN08 SCK2_2 (SCL2_2) MAD15_0	F	L
75	65	54	43	G12	G12	P19 AN09 SIN4_1 IC00_1 INT05_1 MAD16_0	F	M
76	66	55	44	G11	G11	P1A AN10 SOT4_1 (SDA4_1) IC01_1 MAD17_0	M	L
77	67	56	45	F12	G10	P1B AN11 SCK4_1 (SCL4_1) IC02_1 MAD18_0	M	L
78	68	-	46	F11	F13	P1C AN12 CTS4_1 IC03_1 MAD19_0	F	L
79	69	-	47	E12	F12	P1D AN13 RTS4_1 DTTI0X_1 MAD20_0	F	L
80	70	-	48	E11	F11	P1E AN14 ADTG_5 FRCK0_1 MAD21_0	F	L
81	-	-	-	-	F10	P1F ADTG_4 TIOB6_2 RTO05_1 (PPG04_1)	E	I
82	-	-	-	-	E13	P27 TIOA6_2 RTO04_1 (PPG04_1) INT02_2	E	K

Pin No						Pin Name	I/O circuit type	Pin state type
LQFP120	LQFP100	LQFP80	QFP100	BGA112	BGA144			
83	-	-	-	-	E12	P26 TIOB5_0 SCK2_1 (SCL2_1) RTO03_1 (PPG02_1)	E	I
84	-	-	-	-	E11	P25 TX1_0 TIOA5_0 SOT2_1 (SDA2_1) RTO02_1 (PPG02_1)	E	I
85	-	-	-	-	E10	P24 RX1_0 SIN2_1 RTO01_1 (PPG00_1) INT01_2	E	K
86	71	57 -	49	D13	D13	P23 AN15 TIOA7_1 SCK0_0 (SCL0_0) RTO00_1 (PPG00_1) MAD22_0	F	L
87	72	58 -	50	D12	D12	P22 CROUT_0 AN16 TIOB7_1 SOT0_0 (SDA0_0) ZIN1_1	F	L
88	73	59 - 59 -	51	C13	D11	P21 AN17 SIN0_0 BIN1_1 INT06_1 MAD23_0	F	M
89	74	-	52	C12	C12	P20 AN18 AIN1_1 INT05_0 MAD24_0	F	M
90	75	60	53	A13	A13	VSS	-	-
91	76	61	54	B13	A12	VCC	-	-

Pin No						Pin Name	I/O circuit type	Pin state type
LQFP120	LQFP100	LQFP80	QFP100	BGA112	BGA144			
92	77	62	55	A12	B13	P0E TIOB5_2 SCS6_1 IC13_0 S_CLK_0 MDQM1_0	L	I
93	78	63	56	B11	C10	P0D TIOA5_2 SCK6_1 (SCL6_1) IC12_0 S_CMD_0 MDQM0_0	L	I
94	79	64	57	B10	A11	P0C TIOA6_1 SOT6_1 (SDA6_1) IC11_0 S_DATA1_0 MALE_0	L	I
95	80	65	58	A10	B10	P0B TIOB6_1 SIN6_1 IC10_0 INT00_1 S_DATA0_0 MCSX0_0	L	K
96	81	66	59	A9	D9	P0A SIN1_0 FRCK1_0 INT12_2 S_DATA3_0 MCSX1_0	L	K
97	82	67 - 67	60	B9	C9	P09 AN19 TRACED0 TIOA3_2 SOT1_0 (SDA1_0) S_DATA2_0 MCSX5_0	M	N
98	83	-	61	C9	B9	P08 AN20 TRACED1 TIOB3_2 SCK1_0 (SCL1_0) MCSX4_0	F	N

Pin No						Pin Name	I/O circuit type	Pin state type
LQFP120	LQFP100	LQFP80	QFP100	BGA112	BGA144			
99	84	-	62	A8	A9	P07 AN21 TRACED2 TIOA0_2 SCK7_0 (SCL7_0) MCLKOUT_0	F	N
100	85	-	63	B8	D8	P06 AN22 TRACED3 TIOB0_2 SOT7_0 (SDA7_0) MCSX3_0	F	N
101	86	-	64	C8	C8	P05 AN23 ADTG_0 TRACECLK SIN7_0 INT01_1 MCSX2_0	F	O
102	87	68	65	C7	B8	P04 TDO SWO	E	G
103	88	69	66	B7	D7	P03 TMS SWDIO	E	G
104	89	70	67	C6	C7	P02 TDI MCSX6_0	E	H
105	90	71	68	A6	B7	P01 TCK SWCLK	E	G
106	91	72	69	B6	D6	P00 TRSTX MCSX7_0	E	H
107	92	-	70	A5	A7	VSS	-	-
108	-	-	-	-	C6	P68 TIOB7_2 SCK3_0 (SCL3_0) INT00_2	E	K
109	-	-	-	-	B6	P67 TIOA7_2 SOT3_0 (SDA3_0)	E	I

Pin No						Pin Name	I/O circuit type	Pin state type
LQFP120	LQFP100	LQFP80	QFP100	BGA112	BGA144			
110	-	-	-	-	A6	P66 ADTG_8 SIN3_0 INT11_2	E	K
111	-	-	-	-	D5	P65 TIOB7_0 SCK5_1 (SCL5_1)	E	I
112	-	-	-	-	C5	P64 TIOA7_0 SOT5_1 (SDA5_1) INT10_2	E	K
113	93	73	71	C5	B5	P63 CROUT_1 RX0_2	E	K
	-	-	-	-		SIN5_1		
	93	73	71	C5		INT03_0 S_CD_0 MWEX_0		
114	94	74	72	B5	C4	P62 ADTG_3 TX0_2 SIN5_0 INT04_1 S_WP_0 MOEX_0	I	K
115	95	75	73	B4	B4	P61 TIOB2_2 SOT5_0 (SDA5_0) RTCCO_0 SUBOUT_0	E	I
116	96	76	74	B3	B3	P60 TIOA2_2 SCK5_0 (SCL5_0) NMIX WKUP0 MRDY_0	I	F
117	97	77	75	A4	A4	VCC	-	-
118	98	78	76	A3	A3	P80	H	R
119	99	79	77	A2	A2	P81	H	R

Pin No						Pin Name	I/O circuit type	Pin state type
LQFP120	LQFP100	LQFP80	QFP100	BGA112	BGA144			
120	100	80	78	A1	A1	VSS	-	-
-	-	-	-	A7	A5		-	-
-	-	-	-	B2	A8		-	-
-	-	-	-	B12	A10		-	-
-	-	-	-	C11	B2		-	-
-	-	-	-	H1	B11		-	-
-	-	-	-	N4	B12		-	-
-	-	-	-	M5	C3		-	-
-	-	-	-	N7	C11		-	-
-	-	-	-	L11	C13		-	-
-	-	-	-	A11	D4		-	-
-	-	-	-	M12	D10		-	-
-	-	-	-	M2	K1		-	-
-	-	-	-	-	K4	VSS	-	-
-	-	-	-	-	K10		-	-
-	-	-	-	-	L3		-	-
-	-	-	-	-	L5		-	-
-	-	-	-	-	L11		-	-
-	-	-	-	-	L13		-	-
-	-	-	-	-	M2		-	-
-	-	-	-	-	M4		-	-
-	-	-	-	-	M6		-	-
-	-	-	-	-	M7		-	-
-	-	-	-	-	M12		-	-
-	-	-	-	-	N6		-	-

■List of pin functions

The number after the underscore ("_") in pin names such as XXX_1 and XXX_2 indicates the relocated port number. For these pins, there are multiple pins that provide the same function for the same channel. Use the extended port function register (EPFR) to select the pin.

Pin Function	Pin name	Function description	Pin No					
			LQFP 120	LQFP 100	LQFP 80	QFP 100	BGA 112	BGA 144
ADC	ADTG_0	A/D converter external trigger input pin	101	86	-	64	C8	C8
	ADTG_1		7	7	7	85	E1	E1
	ADTG_2		23	18	13	96	J1	J1
	ADTG_3		114	94	74	72	B5	C4
	ADTG_4		81	-	-	-	-	F10
	ADTG_5		80	70	-	48	E11	F11
	ADTG_6		17	12	12	90	F3	G3
	ADTG_7		35	30	-	8	L3	M3
	ADTG_8		110	-	-	-	-	A6
	AN00	A/D converter analog input pin. ANxx describes ADC ch.xx.	62	52	41	30	L13	L12
	AN01		63	53	42	31	L12	K12
	AN02		64	54	43	32	K13	K11
	AN03		65	55	44	33	K12	J12
	AN04		66	56	45	34	J13	J11
	AN05		67	57	46	35	J12	J10
	AN06		68	58	47	36	J11	H12
	AN07		69	59	48	37	H12	H11
	AN08		74	64	53	42	H11	H10
	AN09		75	65	54	43	G12	G12
	AN10		76	66	55	44	G11	G11
	AN11		77	67	56	45	F12	G10
	AN12		78	68	-	46	F11	F13
	AN13		79	69	-	47	E12	F12
	AN14		80	70	-	48	E11	F11
	AN15		86	71	57	49	D13	D13
	AN16		87	72	58	50	D12	D12
	AN17		88	73	59	51	C13	D11
	AN18		89	74	-	52	C12	C12
	AN19		97	82	67	60	B9	C9
	AN20		98	83	-	61	C9	B9
	AN21		99	84	-	62	A8	A9
	AN22		100	85	-	63	B8	D8
	AN23		101	86	-	64	C8	C8
Base Timer 0	TIOA0_0	Base timer ch.0 TIOA pin	32	27	-	5	N2	N2
	TIOA0_1		24	19	14	97	J2	J2
	TIOA0_2		99	84	-	62	A8	A9
	TIOB0_0	Base timer ch.0 TIOB pin	37	32	22	10	L5	K5
	TIOB0_1		14	9	9	87	E3	F4
	TIOB0_2		100	85	-	63	B8	D8
Base Timer 1	TIOA1_0	Base timer ch.1 TIOA pin	33	28	-	6	N3	L2
	TIOA1_1		25	20	15	98	J3	J3
	TIOA1_2		5	5	5	83	D1	D2
	TIOB1_0	Base timer ch.1 TIOB pin	47	42	32	20	L7	L7
	TIOB1_1		15	10	10	88	F1	G1
	TIOB1_2		6	6	6	84	D2	D3

Pin Function	Pin name	Function description	Pin No					
			LQFP 120	LQFP 100	LQFP 80	QFP 100	BGA 112	BGA 144
Base Timer 2	TIOA2_0	Base timer ch.2 TIOA pin	34	29	-	7	M3	N3
	TIOA2_1		26	21	16	99	K1	J4
	TIOA2_2		116	96	76	74	B3	B3
	TIOB2_0	Base timer ch.2 TIOB pin	48	43	33	21	L8	K7
	TIOB2_1		16	11	11	89	F2	G2
	TIOB2_2		115	95	75	73	B4	B4
Base Timer 3	TIOA3_0	Base timer ch.3 TIOA pin	35	30	-	8	L3	M3
	TIOA3_1		27	22	17	100	K2	K2
	TIOA3_2		97	82	67	60	B9	C9
	TIOB3_0	Base timer ch.3 TIOB pin	49	44	34	22	M9	M8
	TIOB3_1		17	12	12	90	F3	G3
	TIOB3_2		98	83	-	61	C9	B9
Base Timer 4	TIOA4_0	Base timer ch.4 TIOA pin	36	31	21	9	M4	L4
	TIOA4_1		28	23	18	1	L1	K3
	TIOA4_2		51	-	-	-	-	K8
	TIOB4_0	Base timer ch.4 TIOB pin	50	45	35	23	L9	L8
	TIOB4_1		18	13	-	91	G1	G4
	TIOB4_2		52	-	-	-	-	L9
Base Timer 5	TIOA5_0	Base timer ch.5 TIOA pin	84	-	-	-	-	E11
	TIOA5_1		29	24	19	2	L2	L1
	TIOA5_2		93	78	63	56	B11	C10
	TIOB5_0	Base timer ch.5 TIOB pin	83	-	-	-	-	E12
	TIOB5_1		19	14	-	92	G2	H1
	TIOB5_2		92	77	62	55	A12	B13
Base Timer 6	TIOA6_0	Base timer ch.6 TIOA pin	53	-	-	-	-	K9
	TIOA6_1		94	79	64	57	B10	A11
	TIOA6_2		82	-	-	-	-	E13
	TIOB6_0	Base timer ch.6 TIOB pin	54	-	-	-	-	M10
	TIOB6_1		95	80	65	58	A10	B10
	TIOB6_2		81	-	-	-	-	F10
Base Timer 7	TIOA7_0	Base timer ch.7 TIOA pin	112	-	-	-	-	C5
	TIOA7_1		86	71	57	49	D13	D13
	TIOA7_2		109	-	-	-	-	B6
	TIOB7_0	Base timer ch.7 TIOB pin	111	-	-	-	-	D5
	TIOB7_1		87	72	58	50	D12	D12
	TIOB7_2		108	-	-	-	-	C6
CAN 0	TX0_0	CAN interface ch.0 TX output pin	51	-	-	-	-	K8
	TX0_1		18	13	-	91	G1	G4
	TX0_2		114	94	74	72	B5	C4
	RX0_0	CAN interface ch.0 RX output pin	52	-	-	-	-	L9
	RX0_1		19	14	-	92	G2	H1
	RX0_2		113	93	73	71	C5	B5
CAN 1	TX1_0	CAN interface ch.1 TX output pin	84	-	-	-	-	E11
	TX1_1		12	-	-	-	-	F2
	TX1_2		63	53	42	31	L12	K12
	RX1_0	CAN interface ch.1 RX output pin	85	-	-	-	-	E10
	RX1_1		11	-	-	-	-	F1
	RX1_2		62	52	41	30	L13	L12

Pin Function	Pin name	Function description	Pin No					
			LQFP 120	LQFP 100	LQFP 80	QFP 100	BGA 112	BGA 144
Debugger	SWCLK	Serial wire debug interface clock input pin	105	90	71	68	A6	B7
	SWDIO	Serial wire debug interface data input / output pin	103	88	69	66	B7	D7
	SWO	Serial wire viewer output pin	102	87	68	65	C7	B8
	TCK	J-TAG test clock input pin	105	90	71	68	A6	B7
	TDI	J-TAG test data input pin	104	89	70	67	C6	C7
	TDO	J-TAG debug data output pin	102	87	68	65	C7	B8
	TMS	J-TAG test mode state input/output pin	103	88	69	66	B7	D7
	TRACECLK	Trace CLK output pin of ETM	101	86	-	64	C8	C8
	TRACED0	Trace data output pin of ETM	97	82	-	60	B9	C9
	TRACED1		98	83	-	61	C9	B9
	TRACED2		99	84	-	62	A8	A9
	TRACED3		100	85	-	63	B8	D8
	TRSTX	J-TAG test reset Input pin	106	91	72	69	B6	D6
External Bus	MAD00_0	External bus interface address bus	27	22	17	100	K2	K2
	MAD01_0		28	23	18	1	L1	K3
	MAD02_0		29	24	19	2	L2	L1
	MAD03_0		47	42	32	20	L7	L7
	MAD04_0		48	43	33	21	L8	K7
	MAD05_0		49	44	34	22	M9	M8
	MAD06_0		50	45	35	23	L9	L8
	MAD07_0		62	52	41	30	L13	L12
	MAD08_0		63	53	42	31	L12	K12
	MAD09_0		64	54	43	32	K13	K11
	MAD10_0		65	55	44	33	K12	J12
	MAD11_0		66	56	45	34	J13	J11
	MAD12_0		67	57	46	35	J12	J10
	MAD13_0		68	58	47	36	J11	H12
	MAD14_0		69	59	48	37	H12	H11
	MAD15_0		74	64	53	42	H11	H10
	MAD16_0		75	65	54	43	G12	G12
	MAD17_0		76	66	55	44	G11	G11
	MAD18_0		77	67	56	45	F12	G10
	MAD19_0		78	68	-	46	F11	F13
	MAD20_0		79	69	-	47	E12	F12
	MAD21_0		80	70	-	48	E11	F11
	MAD22_0		86	71	-	49	D13	D13
	MAD23_0		88	73	-	51	C13	D11
	MAD24_0		89	74	-	52	C12	C12

Pin Function	Pin name	Function description	Pin No					
			LQFP 120	LQFP 100	LQFP 80	QFP 100	BGA 112	BGA 144
External Bus	MCSX0_0	External bus interface chip select output pin	95	80	65	58	A10	B10
	MCSX1_0		96	81	66	59	A9	D9
	MCSX2_0		101	86	-	64	C8	C8
	MCSX3_0		100	85	-	63	B8	D8
	MCSX4_0		98	83	-	61	C9	B9
	MCSX5_0		97	82	67	60	B9	C9
	MCSX6_0		104	89	70	67	C6	C7
	MCSX7_0		106	91	72	69	B6	D6
	MCSX8_0		35	30	-	8	L3	M3
	MADATA00_0	External bus interface data bus (Address / data multiplex bus)	2	2	2	80	C1	C1
	MADATA01_0		3	3	3	81	C2	C2
	MADATA02_0		4	4	4	82	C3	D1
	MADATA03_0		5	5	5	83	D1	D2
	MADATA04_0		6	6	6	84	D2	D3
	MADATA05_0		7	7	7	85	E1	E1
	MADATA06_0		8	8	8	86	E2	E2
	MADATA07_0		9	9	9	87	E3	E3
	MADATA08_0		10	10	10	88	F1	E4
	MADATA09_0		11	11	11	89	F2	F1
	MADATA10_0		12	12	12	90	F3	F2
	MADATA11_0		13	13	-	91	G1	F3
	MADATA12_0		14	14	-	92	G2	F4
	MADATA13_0		15	15	-	93	G3	G1
	MADATA14_0		16	16	-	94	H2	G2
	MADATA15_0		17	17	-	95	H3	G3
	MDQM0_0	External bus interface byte mask signal output pin	93	78	63	56	B11	C10
	MDQM1_0		92	77	62	55	A12	B13
	MALE_0	External bus interface Address Latch enable output signal for multiplex	94	79	64	57	B10	A11
	MRDY_0	External bus interface external RDY input signal	116	96	76	74	B3	B3
	MCLKOUT_0	External bus interface external clock output pin	99	84	-	62	A8	A9
	MNALE_0	External bus interface ALE signal to control NAND Flash output pin	18	-	-	-	-	G4
	MNCLE_0	External bus interface CLE signal to control NAND Flash output pin	19	-	-	-	-	H1
	MNREX_0	External bus interface read enable signal to control NAND Flash	21	-	-	-	-	H3
	MNWEX_0	External bus interface write enable signal to control NAND Flash	20	-	-	-	-	H2
	MOEX_0	External bus interface read enable signal for SRAM	114	94	74	72	B5	C4
	MWEX_0	External bus interface write enable signal for SRAM	113	93	73	71	C5	B5

Pin Function	Pin name	Function description	Pin No					
			LQFP 120	LQFP 100	LQFP 80	QFP 100	BGA 112	BGA 144
External Bus	MSDCLK_0	SDRAM interface SDRAM clock output pin	23	18	-	96	J1	J1
	MSDCKE_0	SDRAM interface SDRAM clock enable pin	24	19	-	97	J2	J2
	MRASX_0	SDRAM interface SDRAM row address strobe pin	25	20	-	98	J3	J3
	MCASX_0	SDRAM interface SDRAM column address strobe pin	26	21	-	99	K1	J4
	MSDWEX_0	SDRAM interface SDRAM write enable pin	34	29	-	7	M3	N3
External Interrupt	INT00_0	External interrupt request 00 input pin	2	2	2	80	C1	C1
	INT00_1		95	80	65	58	A10	B10
	INT00_2		108	-	-	-	-	C6
	INT01_0	External interrupt request 01 input pin	3	3	3	81	C2	C2
	INT01_1		101	86	-	64	C8	C8
	INT01_2		85	-	-	-	-	E10
	INT02_0	External interrupt request 02 input pin	6	6	6	84	D2	D3
	INT02_1		62	52	41	30	L13	L12
	INT02_2		82	-	-	-	-	E13
	INT03_0	External interrupt request 03 input pin	113	93	73	71	C5	B5
	INT03_1		65	55	44	33	K12	J12
	INT03_2		54	-	-	-	-	M10
	INT04_0	External interrupt request 04 input pin	17	12	12	90	F3	G3
	INT04_1		114	94	74	72	B5	C4
	INT04_2		10	-	-	-	-	E4
	INT05_0	External interrupt request 05 input pin	89	74	-	52	C12	C12
	INT05_1		75	65	54	43	G12	G12
	INT05_2		21	16	-	94	H2	H3
	INT06_1	External interrupt request 06 input pin	88	73	59	51	C13	D11
	INT06_2		22	17	-	95	H3	H4
	INT07_1	External interrupt request 07 input pin	11	-	-	-	-	F1
	INT07_2		7	7	7	85	E1	E1
	INT08_1	External interrupt request 08 input pin	19	14	-	92	G2	H1
	INT08_2		8	8	8	86	E2	E2
	INT09_1	External interrupt request 09 input pin	20	15	-	93	G3	H2
	INT09_2		15	10	10	88	F1	G1
	INT10_1	External interrupt request 10 input pin	16	11	11	89	F2	G2
	INT10_2		112	-	-	-	-	C5
	INT11_1	External interrupt request 11 input pin	50	45	35	23	L9	L8
	INT11_2		110	-	-	-	-	A6
	INT12_1	External interrupt request 12 input pin	32	27	-	5	N2	N2
	INT12_2		96	81	66	59	A9	D9
	INT13_1	External interrupt request 13 input pin	33	28	-	6	N3	L2
	INT13_2		49	44	34	22	M9	M8
	INT14_1	External interrupt request 14 input pin	68	58	47	36	J11	H12
	INT14_2		53	-	-	-	-	K9
	INT15_1	External interrupt request 15 input pin	52	-	-	-	-	L9
	INT15_2		14	9	9	87	E3	F4
	NMIX	Non-Maskable Interrupt input pin	116	96	76	74	B3	B3

Pin Function	Pin name	Function description	Pin No					
			LQFP 120	LQFP 100	LQFP 80	QFP 100	BGA 112	BGA 144
GPIO	P00	General-purpose I/O port 0	106	91	72	69	B6	D6
	P01		105	90	71	68	A6	B7
	P02		104	89	70	67	C6	C7
	P03		103	88	69	66	B7	D7
	P04		102	87	68	65	C7	B8
	P05		101	86	-	64	C8	C8
	P06		100	85	-	63	B8	D8
	P07		99	84	-	62	A8	A9
	P08		98	83	-	61	C9	B9
	P09		97	82	67	60	B9	C9
	P0A		96	81	66	59	A9	D9
	P0B		95	80	65	58	A10	B10
	P0C		94	79	64	57	B10	A11
	P0D		93	78	63	56	B11	C10
	P0E		92	77	62	55	A12	B13
	P10	General-purpose I/O port 1	62	52	41	30	L13	L12
	P11		63	53	42	31	L12	K12
	P12		64	54	43	32	K13	K11
	P13		65	55	44	33	K12	J12
	P14		66	56	45	34	J13	J11
	P15		67	57	46	35	J12	J10
	P16		68	58	47	36	J11	H12
	P17		69	59	48	37	H12	H11
	P18		74	64	53	42	H11	H10
	P19		75	65	54	43	G12	G12
	P1A		76	66	55	44	G11	G11
	P1B		77	67	56	45	F12	G10
	P1C		78	68	-	46	F11	F13
	P1D		79	69	-	47	E12	F12
	P1E		80	70	-	48	E11	F11
	P1F		81	-	-	-	-	F10
	P20	General-purpose I/O port 2	89	74	-	52	C12	C12
	P21		88	73	59	51	C13	D11
	P22		87	72	58	50	D12	D12
	P23		86	71	57	49	D13	D13
	P24		85	-	-	-	-	E10
	P25		84	-	-	-	-	E11
	P26		83	-	-	-	-	E12
	P27		82	-	-	-	-	E13

Pin Function	Pin name	Function description	Pin No					
			LQFP 120	LQFP 100	LQFP 80	QFP 100	BGA 112	BGA 144
GPIO	P30	General-purpose I/O port 3	14	9	9	87	E3	F4
	P31		15	10	10	88	F1	G1
	P32		16	11	11	89	F2	G2
	P33		17	12	12	90	F3	G3
	P34		18	13	-	91	G1	G4
	P35		19	14	-	92	G2	H1
	P36		20	15	-	93	G3	H2
	P37		21	16	-	94	H2	H3
	P38		22	17	-	95	H3	H4
	P39		23	18	13	96	J1	J1
	P3A		24	19	14	97	J2	J2
	P3B		25	20	15	98	J3	J3
	P3C		26	21	16	99	K1	J4
	P3D		27	22	17	100	K2	K2
	P3E		28	23	18	1	L1	K3
	P3F		29	24	19	2	L2	L1
	P40	General-purpose I/O port 4	32	27	-	5	N2	N2
	P41		33	28	-	6	N3	L2
	P42		34	29	-	7	M3	N3
	P43		35	30	-	8	L3	M3
	P44		36	31	21	9	M4	L4
	P45		37	32	22	10	L5	K5
	P46		39	34	24	12	N5	N5
	P47		40	35	25	13	N6	M5
	P48		41	36	26	14	L6	L6
	P49		42	37	27	15	M7	K6
	P4B		47	42	32	20	L7	L7
	P4C		48	43	33	21	L8	K7
	P4D		49	44	34	22	M9	M8
	P4E		50	45	35	23	L9	L8
	P50	General-purpose I/O port 5	2	2	2	80	C1	C1
	P51		3	3	3	81	C2	C2
	P52		4	4	4	82	C3	D1
	P53		5	5	5	83	D1	D2
	P54		6	6	6	84	D2	D3
	P55		7	7	7	85	E1	E1
	P56		8	8	8	86	E2	E2
	P57		9	-	-	-	-	E3
	P58		10	-	-	-	-	E4
	P59		11	-	-	-	-	F1
	P5A		12	-	-	-	-	F2
	P5B		13	-	-	-	-	F3

Pin Function	Pin name	Function description	Pin No					
			LQFP 120	LQFP 100	LQFP 80	QFP 100	BGA 112	BGA 144
GPIO	P60	General-purpose I/O port 6	116	96	76	74	B3	B3
	P61		115	95	75	73	B4	B4
	P62		114	94	74	72	B5	C4
	P63		113	93	73	71	C5	B5
	P64		112	-	-	-	-	C5
	P65		111	-	-	-	-	D5
	P66		110	-	-	-	-	A6
	P67		109	-	-	-	-	B6
	P68		108	-	-	-	-	C6
	P70	General-purpose I/O port 7	51	-	-	-	-	K8
	P71		52	-	-	-	-	L9
	P72		53	-	-	-	-	K9
	P73		54	-	-	-	-	M10
	P74		55	-	-	-	-	L10
	P80	General-purpose I/O port 8	118	98	78	76	A3	A3
	P81		119	99	79	77	A2	A2
	PE0	General-purpose I/O port E	56	46	36	24	M10	N10
	PE2		58	48	38	26	N11	N11
	PE3		59	49	39	27	N12	N12
Multi-function Serial 0	SIN0_0	Multi-function serial interface ch.0 input pin	88	73	59	51	C13	D11
	SIN0_1		65	55	44	33	K12	J12
	SOT0_0 (SDA0_0)	Multi-function serial interface ch.0 output pin. This pin operates as SOT0 when it is used in a UART/CSIO/LIN (operation modes 0 to 3) and as SDA0 when it is used in an I^2C (operation mode 4).	87	72	58	50	D12	D12
	SOT0_1 (SDA0_1)		66	56	45	34	J13	J11
	SCK0_0 (SCL0_0)	Multi-function serial interface ch.0 clock I/O pin. This pin operates as SCK0 when it is used in a UART/CSIO/LIN (operation modes 0 to 3) and as SCL0 when it is used in an I^2C (operation mode 4).	86	71	57	49	D13	D13
	SCK0_1 (SCL0_1)		67	57	46	35	J12	J10
Multi-function Serial 1	SIN1_0	Multi-function serial interface ch.1 input pin	96	81	66	59	A9	D9
	SIN1_1		62	52	41	30	L13	L12
	SOT1_0 (SDA1_0)	Multi-function serial interface ch.1 output pin. This pin operates as SOT1 when it is used in a UART/CSIO/LIN (operation modes 0 to 3) and as SDA1 when it is used in an I^2C (operation mode 4).	97	82	67	60	B9	C9
	SOT1_1 (SDA1_1)		63	53	42	31	L12	K12
	SCK1_0 (SCL1_0)	Multi-function serial interface ch.1 clock I/O pin. This pin operates as SCK1 when it is used in a CSIO (operation modes 4) and as SCL1 when it is used in an I^2C (operation mode 4).	98	83	-	61	C9	B9
	SCK1_1 (SCL1_1)		64	54	43	32	K13	K11

Pin Function	Pin name	Function description	Pin No					
			LQFP 120	LQFP 100	LQFP 80	QFP 100	BGA 112	BGA 144
Multi-function Serial 2	SIN2_0	Multi-function serial interface ch.2 input pin	53	-	-	-	-	K9
	SIN2_1		85	-	-	-	-	E10
	SIN2_2		68	58	47	36	J11	H12
	SOT2_0 (SDA2_0)	Multi-function serial interface ch.2 output pin. This pin operates as SOT2 when it is used in a UART/CSIO/LIN (operation modes 0 to 3) and as SDA2 when it is used in an I^2C (operation mode 4).	54	-	-	-	-	M10
	SOT2_1 (SDA2_1)		84	-	-	-	-	E11
	SOT2_2 (SDA2_2)		69	59	48	37	H12	H11
	SCK2_0 (SCL2_0)	Multi-function serial interface ch.2 clock I/O pin. This pin operates as SCK2 when it is used in a CSIO (operation modes 2) and as SCL2 when it is used in an I^2C (operation mode 4).	55	-	-	-	-	L10
	SCK2_1 (SCL2_1)		83	-	-	-	-	E12
	SCK2_2 (SCL2_2)		74	64	53	42	H11	H10
Multi-function Serial 3	SIN3_0	Multi-function serial interface ch.3 input pin	110	-	-	-	-	A6
	SIN3_1		15	10	10	88	F1	G1
	SOT3_0 (SDA3_0)	Multi-function serial interface ch.3 output pin. This pin operates as SOT3 when it is used in a UART/CSIO/LIN (operation modes 0 to 3) and as SDA3 when it is used in an I^2C (operation mode 4).	109	-	-	-	-	B6
	SOT3_1 (SDA3_1)		16	11	11	89	F2	G2
	SCK3_0 (SCL3_0)	Multi-function serial interface ch.3 clock I/O pin. This pin operates as SCK3 when it is used in a CSIO (operation modes 2) and as SCL3 when it is used in an I^2C (operation mode 4).	108	-	-	-	-	C6
	SCK3_1 (SCL3_1)		17	12	12	90	F3	G3
Multi-function Serial 4	SIN4_0	Multi-function serial interface ch.4 input pin	6	6	6	84	D2	D3
	SIN4_1		75	65	54	43	G12	G12
	SIN4_2		10	-	-	-	-	E4
	SOT4_0 (SDA4_0)	Multi-function serial interface ch.4 output pin. This pin operates as SOT4 when it is used in a UART/CSIO/LIN (operation modes 0 to 3) and as SDA4 when it is used in an I^2C (operation mode 4).	5	5	5	83	D1	D2
	SOT4_1 (SDA4_1)		76	66	55	44	G11	G11
	SOT4_2 (SDA4_2)		11	-	-	-	-	F1
	SCK4_0 (SCL4_0)	Multi-function serial interface ch.4 clock I/O pin. This pin operates as SCK4 when it is used in a CSIO (operation modes 2) and as SCL4 when it is used in an I^2C (operation mode 4).	4	4	4	82	C3	D1
	SCK4_1 (SCL4_1)		77	67	56	45	F12	G10
	SCK4_2 (SCL4_2)		12	-	-	-	-	F2
	CTS4_0	Multi-function serial interface ch.4 CTS input pin	2	2	2	80	C1	C1
	CTS4_1		78	68	-	46	F11	F13
	CTS4_2		13	-	-	-	-	F3
	RTS4_0	Multi-function serial interface ch.4 RTS output pin	3	3	3	81	C2	C2
	RTS4_1		79	69	-	47	E12	F12
	RTS4_2		14	9	9	87	E3	F4

Pin Function	Pin name	Function description	Pin No					
			LQFP 120	LQFP 100	LQFP 80	QFP 100	BGA 112	BGA 144
Multi-function Serial 5	SIN5_0	Multi-function serial interface ch.5 input pin	114	94	74	72	B5	C4
	SIN5_1		113	-	-	-	-	B5
	SIN5_2		20	15	-	93	G3	H2
	SOT5_0 (SDA5_0)	Multi-function serial interface ch.5 output pin. This pin operates as SOT5 when it is used in a UART/CSIO/LIN (operation modes 0 to 3) and as SDA5 when it is used in an I^2C (operation mode 4).	115	95	75	73	B4	B4
	SOT5_1 (SDA5_1)		112	-	-	-	-	C5
	SOT5_2 (SDA5_2)		21	16	-	94	H2	H3
	SCK5_0 (SCL5_0)	Multi-function serial interface ch.5 clock I/O pin. This pin operates as SCK5 when it is used in a CSIO (operation modes 2) and as SCL5 when it is used in an I^2C (operation mode 4).	116	96	76	74	B3	B3
	SCK5_1 (SCL5_1)		111	-	-	-	-	D5
	SCK5_2 (SCL5_2)		22	17	-	95	H3	H4
Multi-function Serial 6	SIN6_0	Multi-function serial interface ch.6 input pin	7	7	7	85	E1	E1
	SIN6_1		95	80	65	58	A10	B10
	SOT6_0 (SDA6_0)	Multi-function serial interface ch.6 output pin. This pin operates as SOT6 when it is used in a UART/CSIO/LIN (operation modes 0 to 3) and as SDA6 when it is used in an I^2C (operation mode 4).	8	8	8	86	E2	E2
	SOT6_1 (SDA6_1)		94	79	64	57	B10	A11
	SCK6_0 (SCL6_0)	Multi-function serial interface ch.6 clock I/O pin. This pin operates as SCK6 when it is used in a CSIO (operation modes 2) and as SCL6 when it is used in an I^2C (operation mode 4).	9	-	-	-	-	E3
	SCK6_1 (SCL6_1)		93	78	63	56	B11	C10
	SCS6_1	Multi-function serial interface ch.6 serial chip select pin	92	77	62	55	A12	B13
Multi-function Serial 7	SIN7_0	Multi-function serial interface ch.7 input pin	101	86	-	64	C8	C8
	SIN7_1		50	45	35	23	L9	L8
	SOT7_0 (SDA7_0)	Multi-function serial interface ch.7 output pin. This pin operates as SOT7 when it is used in a UART/CSIO/LIN (operation modes 0 to 3) and as SDA7 when it is used in an I^2C (operation mode 4).	100	85	-	63	B8	D8
	SOT7_1 (SDA7_1)		49	44	34	22	M9	M8
	SCK7_0 (SCL7_0)	Multi-function serial interface ch.7 clock I/O pin. This pin operates as SCK7 when it is used in a CSIO (operation modes 2) and as SCL7 when it is used in an I^2C (operation mode 4).	99	84	-	62	A8	A9
	SCK7_1 (SCL7_1)		48	43	33	21	L8	K7
	SCS7_1	Multi-function serial interface ch.7 serial chip select pin	47	42	32	20	L7	L7

Pin function	Pin name	Function description	Pin No					
			LQFP 120	LQFP 100	LQFP 80	QFP 100	BGA 112	BGA 144
Multi-function Timer 0	DTTI0X_0	Input signal controlling wave form generator outputs RTO00 to RTO05 of Multi-function timer 0.	23	18	13	96	J1	J1
	DTTI0X_1		79	69	-	47	E12	F12
	FRCK0_0	16-bit free-run timer ch.0 external clock input pin	18	13	-	91	G1	G4
	FRCK0_1		80	70	-	48	E11	F11
	FRCK0_2		62	52	41	30	L13	L12
	IC00_0	16-bit input capture ch.0 input pin of Multi-function timer 0. ICxx describes channel number.	22	17	-	95	H3	H4
	IC00_1		75	65	54	43	G12	G12
	IC00_2		63	53	42	31	L12	K12
	IC01_0		21	16	-	94	H2	H3
	IC01_1		76	66	55	44	G11	G11
	IC01_2		64	54	43	32	K13	K11
	IC02_0		20	15	-	93	G3	H2
	IC02_1		77	67	56	45	F12	G10
	IC02_2		65	55	44	33	K12	J12
	IC03_0		19	14	-	92	G2	H1
	IC03_1		78	68	-	46	F11	F13
	IC03_2		66	56	45	34	J13	J11
	RTO00_0 (PPG00_0)	Wave form generator output pin of Multi-function timer 0. This pin operates as PPG00 when it is used in PPG0 output modes.	24	19	14	97	J2	J2
	RTO00_1 (PPG00_1)		86	71	57	49	D13	D13
	RTO01_0 (PPG00_0)	Wave form generator output pin of Multi-function timer 0. This pin operates as PPG00 when it is used in PPG0 output modes.	25	20	15	98	J3	J3
	RTO01_1 (PPG00_1)		85	-	-	-	-	E10
	RTO02_0 (PPG02_0)	Wave form generator output pin of Multi-function timer 0. This pin operates as PPG02 when it is used in PPG0 output modes.	26	21	16	99	K1	J4
	RTO02_1 (PPG02_1)		84	-	-	-	-	E11
	RTO03_0 (PPG02_0)	Wave form generator output pin of Multi-function timer 0. This pin operates as PPG02 when it is used in PPG0 output modes.	27	22	17	100	K2	K2
	RTO03_1 (PPG02_1)		83	-	-	-	-	E12
	RTO04_0 (PPG04_0)	Wave form generator output pin of Multi-function timer 0. This pin operates as PPG04 when it is used in PPG0 output modes.	28	23	18	1	L1	K3
	RTO04_1 (PPG04_1)		82	-	-	-	-	E13
	RTO05_0 (PPG04_0)	Wave form generator output pin of Multi-function timer 0. This pin operates as PPG04 when it is used in PPG0 output modes.	29	24	19	2	L2	L1
	RTO05_1 (PPG04_1)		81	-	-	-	-	F10

Pin Function	Pin name	Function description	Pin No					
			LQFP 120	LQFP 100	LQFP 80	QFP 100	BGA 112	BGA 144
Multi-function Timer 1	DTTI1X_0	Input signal controlling wave form generator outputs RTO10 to RTO15 of Multi-function timer 1.	8	8	8	86	E2	E2
	DTTI1X_1		55	-	-	-	-	L10
	FRCK1_0	16-bit free-run timer ch.1 external clock input pin	96	81	66	59	A9	D9
	FRCK1_1		50	45	35	23	L9	L8
	IC10_0	16-bit input capture ch.1 input pin of Multi-function timer 1. ICxx describes channel number.	95	80	65	58	A10	B10
	IC10_1		54	-	-	-	-	M10
	IC11_0		94	79	64	57	B10	A11
	IC11_1		53	-	-	-	-	K9
	IC12_0		93	78	63	56	B11	C10
	IC12_1		52	-	-	-	-	L9
	IC13_0		92	77	62	55	A12	B13
	IC13_1		51	-	-	-	-	K8
	RTO10_0 (PPG10_0)	Wave form generator output pin of Multi-function timer 1. This pin operates as PPG10 when it is used in PPG1 output modes.	2	2	2	80	C1	C1
	RTO10_1 (PPG10_1)		32	27	-	5	N2	N2
	RTO11_0 (PPG10_0)	Wave form generator output pin of Multi-function timer 1. This pin operates as PPG10 when it is used in PPG1 output modes.	3	3	3	81	C2	C2
	RTO11_1 (PPG10_1)		33	28	-	6	N3	L2
	RTO12_0 (PPG12_0)	Wave form generator output pin of Multi-function timer 1. This pin operates as PPG12 when it is used in PPG1 output modes.	4	4	4	82	C3	D1
	RTO12_1 (PPG12_1)		34	29	-	7	M3	N3
	RTO13_0 (PPG12_0)	Wave form generator output pin of Multi-function timer 1. This pin operates as PPG12 when it is used in PPG1 output modes.	5	5	5	83	D1	D2
	RTO13_1 (PPG12_1)		35	30	-	8	L3	M3
	RTO14_0 (PPG14_0)	Wave form generator output pin of Multi-function timer 1. This pin operates as PPG14 when it is used in PPG1 output modes.	6	6	6	84	D2	D3
	RTO14_1 (PPG14_1)		36	31	21	9	M4	L4
	RTO15_0 (PPG14_0)	Wave form generator output pin of Multi-function timer 1. This pin operates as PPG14 when it is used in PPG1 output modes.	7	7	7	85	E1	E1
	RTO15_1 (PPG14_1)		37	32	22	10	L5	K5
Quadrature Position/ Revolution Counter 0	AIN0_0	QPRC ch.0 AIN input pin	24	19	14	97	J2	J2
	AIN0_1		51	-	-	-	-	K8
	AIN0_2		2	2	2	80	C1	C1
	BIN0_0	QPRC ch.0 BIN input pin	25	20	15	98	J3	J3
	BIN0_1		52	-	-	-	-	L9
	BIN0_2		3	3	3	81	C2	C2
	ZIN0_0	QPRC ch.0 ZIN input pin	26	21	16	99	K1	J4
	ZIN0_1		53	-	-	-	-	K9
	ZIN0_2		4	4	4	82	C3	D1

Pin Function	Pin name	Function description	Pin No					
			LQFP 120	LQFP 100	LQFP 80	QFP 100	BGA 112	BGA 144
Quadrature Position/ Revolution Counter 1	AIN1_0	QPRC ch.1 AIN input pin	10	-	-	-	-	E4
	AIN1_1		89	74	-	52	C12	C12
	AIN1_2		48	43	33	21	L8	K7
	BIN1_0	QPRC ch.1 BIN input pin	11	-	-	-	-	F1
	BIN1_1		88	73	-	51	C13	D11
	BIN1_2		49	44	34	22	M9	M8
	ZIN1_0	QPRC ch.1 ZIN input pin	12	-	-	-	-	F2
	ZIN1_1		87	72	-	50	D12	D12
	ZIN1_2		50	45	35	23	L9	L8
Real-time clock	RTCCO_0	0.5 seconds pulse output pin of Real-time clock	115	95	75	73	B4	B4
	RTCCO_1		64	54	43	32	K13	K11
	RTCCO_2		23	18	13	96	J1	J1
	SUBOUT_0	Sub clock output pin	115	95	75	73	B4	B4
	SUBOUT_1		64	54	43	32	K13	K11
	SUBOUT_2		23	18	13	96	J1	J1
Low-Power Consumption Mode	WKUP0	Deep standby mode return signal input pin 0	116	96	76	74	B3	B3
	WKUP1	Deep standby mode return signal input pin 1	14	9	9	87	E3	F4
	WKUP2	Deep standby mode return signal input pin 2	50	45	35	23	L9	L8
	WKUP3	Deep standby mode return signal input pin 3	69	59	48	37	H12	H11
DAC	DA0	D/A converter ch.0 analog output pin	36	31	21	9	M4	L4
	DA1	D/A converter ch.1 analog output pin	37	32	22	10	L5	K5
VBAT	VREGCTL	On-board regulator control pin	41	36	26	14	L6	L6
	VWAKEUP	The return signal input pin from a hibernation state	42	37	27	15	M7	K6
SD I/F	S_CLK_0	SD memory card interface SD memory card clock output pin	92	77	62	55	A12	B13
	S_CMD_0	SD memory card interface SD memory card command output	93	78	63	56	B11	C10
	S_DATA1_0	SD memory card interface SD memory card data bus	94	79	64	57	B10	A11
	S_DATA0_0		95	80	65	58	A10	B10
	S_DATA3_0		96	81	66	59	A9	D9
	S_DATA2_0		97	82	67	60	B9	C9
	S_CD_0	SD memory card interface SD memory card detection pin	113	93	73	71	C5	B5
	S_WP_0	SD memory card interface SD memory card write protection	114	94	74	72	B5	C4
RESET	INITX	External Reset Input pin. A reset is valid when INITX="L".	38	33	23	11	M6	N4
MODE	MD1	Mode 1 pin. During serial programming to Flash memory, MD1="L" must be input.	56	46	36	24	M10	N10
	MD0	Mode 0 pin. During normal operation, MD0="L" must be input. During serial programming to Flash memory, MD0="H" must be input.	57	47	37	25	M11	M11

Pin Function	Pin name	Function description	Pin No					
			LQFP 120	LQFP 100	LQFP 80	QFP 100	BGA 112	BGA 144
POWER	VCC	Power supply Pin	1	1	1	79	B1	B1
			31	26	-	4	M1	M1
			46	41	31	19	M8	M9
			61	51	-	29	M13	M13
			91	76	61	54	B13	A12
			117	97	77	75	A4	A4
GND	VSS	GND Pin	107	92	-	70	A5	A7
			30	25	20	3	N1	N1
			45	40	30	18	N10	N9
			60	50	40	28	N13	N13
			90	75	60	53	A13	A13
			120	100	80	78	A1	A1
			-	-	-	-	A7	A5
			-	-	-	-	B2	A8
			-	-	-	-	B12	A10
			-	-	-	-	C11	B2
			-	-	-	-	H1	B11
			-	-	-	-	N4	B12
			-	-	-	-	M5	C3
			-	-	-	-	N7	C11
			-	-	-	-	L11	C13
			-	-	-	-	A11	D4
			-	-	-	-	M12	D10
			-	-	-	-	M2	K1
			-	-	-	-	-	K4
			-	-	-	-	-	K10
			-	-	-	-	-	L3
			-	-	-	-	-	L5
			-	-	-	-	-	L11
			-	-	-	-	-	L13
			-	-	-	-	-	M2
GND	VSS	GND Pin	-	-	-	-	-	M4
			-	-	-	-	-	M6
			-	-	-	-	-	M7
			-	-	-	-	-	M12
			-	-	-	-	-	N6
CLOCK	X0	Main clock (oscillation) input pin	58	48	38	26	N11	N11
	X1	Main clock (oscillation) I/O pin	59	49	39	27	N12	N12
	X0A	Sub clock (oscillation) input pin	39	34	24	12	N5	N5
	X1A	Sub clock (oscillation) I/O pin	40	35	25	13	N6	M5
	CROUT_0	Built-in high-speed CR-osc clock output port	87	72	58	50	D12	D12
	CROUT_1		113	93	73	71	C5	B5
ADC POWER	AVCC	A/D converter and D/A converter analog power supply pin	70	60	49	38	H13	K13
	AVRL	A/D converter analog reference voltage input pin	72	62	51	40	F13	H13
	AVRH	A/D converter analog reference voltage input pin	73	63	52	41	E13	G13

Pin Function	Pin name	Function description	Pin No					
			LQFP 120	LQFP 100	LQFP 80	QFP 100	BGA 112	BGA 144
VBAT POWER	VBAT	VBAT power supply pin. Backup power supply (battery etc.) and system power supply.	43	38	28	16	N8	N7
ADC GND	AVSS	A/D converter and D/A converter GND pin	71	61	50	39	G13	J13
C pin	C	Power supply stabilization capacity pin	44	39	29	17	N9	N8

5. I/O Circuit Type

Type	Circuit	Remarks
A	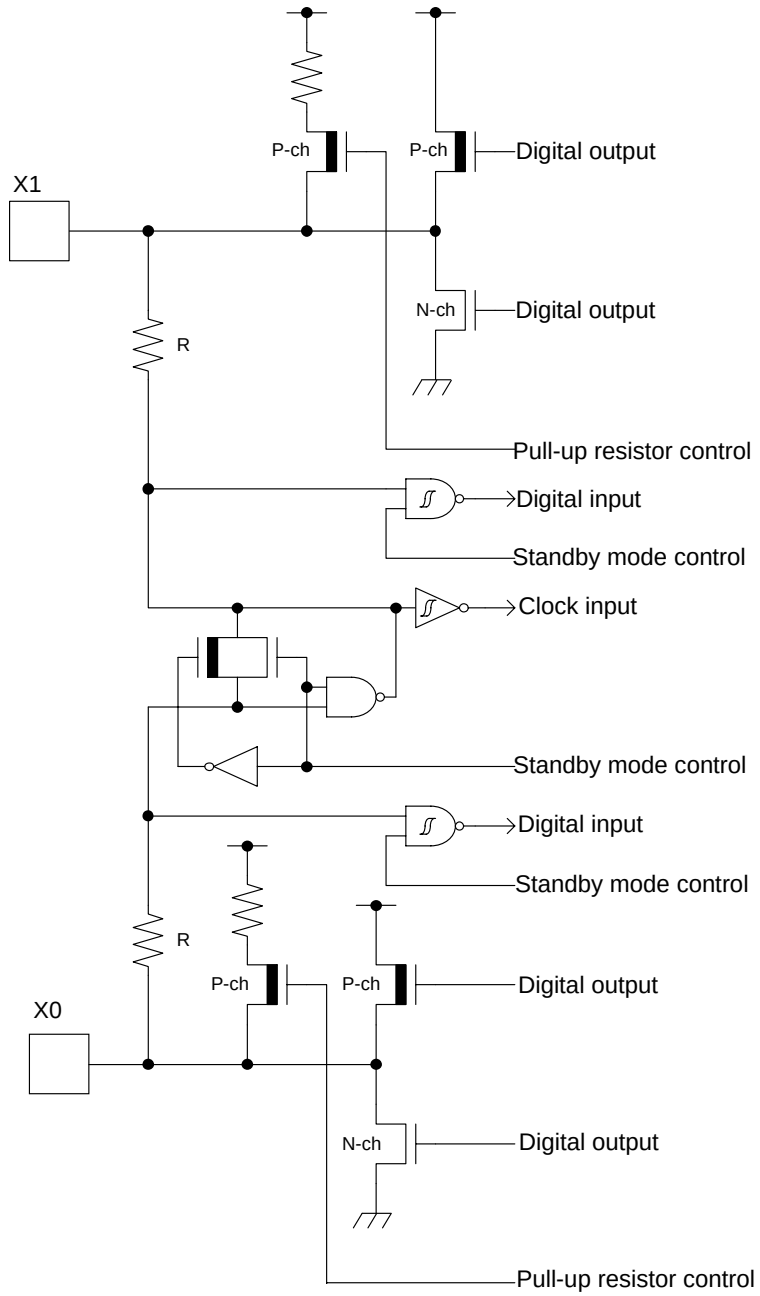	It is possible to select the main oscillation / GPIO function When the main oscillation is selected. • Oscillation feedback resistor : Approximately 1MΩ • With Standby mode control When the GPIO is selected. • CMOS level output. • CMOS level hysteresis input • With pull-up resistor control • With standby mode control • Pull-up resistor : Approximately 50kΩ • I_{OH} = -4mA, I_{OL} = 4mA
B	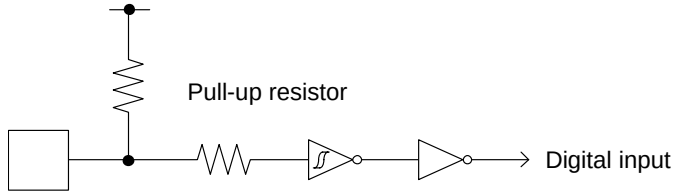	• CMOS level hysteresis input • Pull-up resistor : Approximately 50kΩ

Type	Circuit	Remarks
C	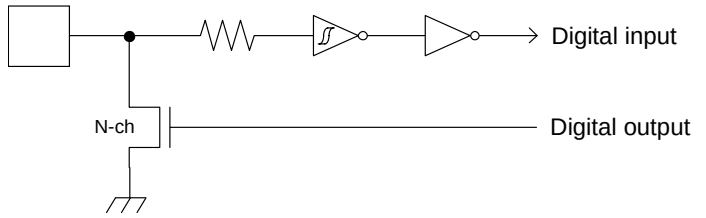	• Open drain output • CMOS level hysteresis input
E	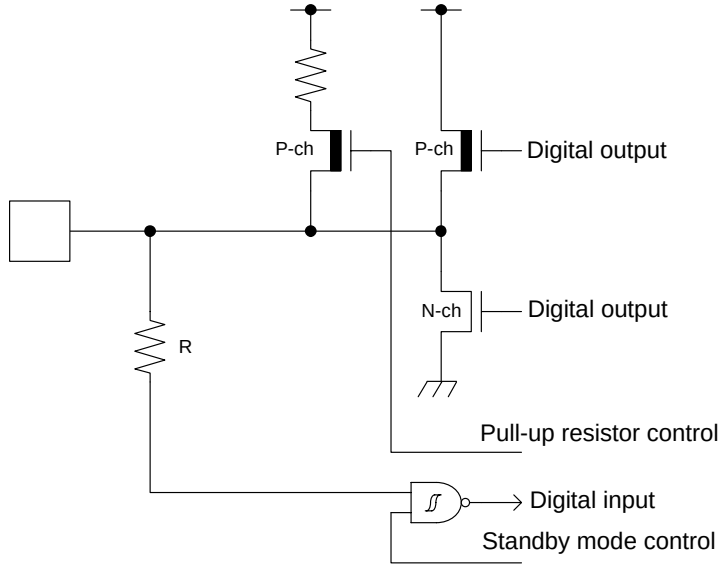	• CMOS level output • CMOS level hysteresis input • With pull-up resistor control • With standby mode control • Pull-up resistor : Approximately 50kΩ • I_{OH} = -4mA, I_{OL} = 4mA

Type	Circuit	Remarks
F	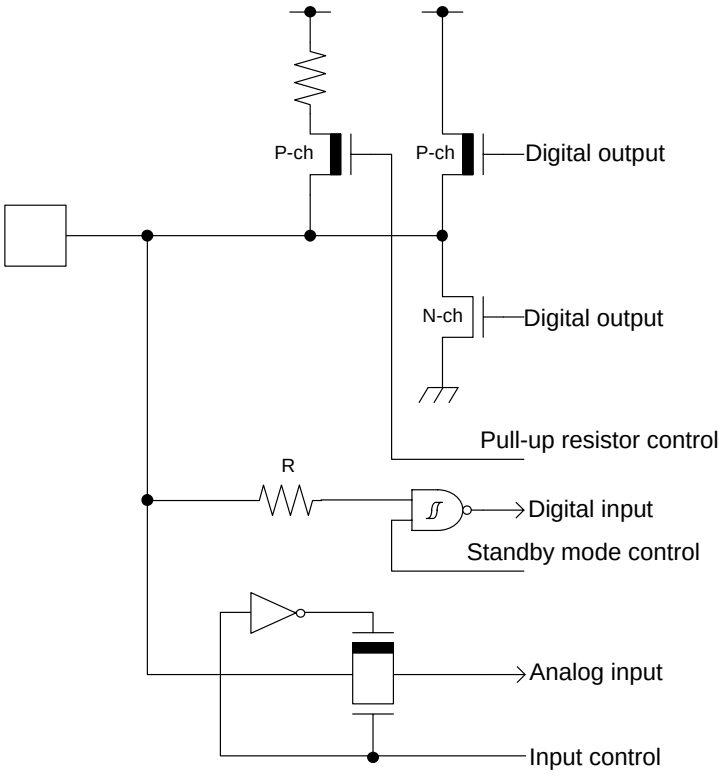	• CMOS level output • CMOS level hysteresis input • With input control • Analog input • With pull-up resistor control • With standby mode control • Pull-up resistor : Approximately 50kΩ • I_{OH} = -4mA, I_{OL} = 4mA
G	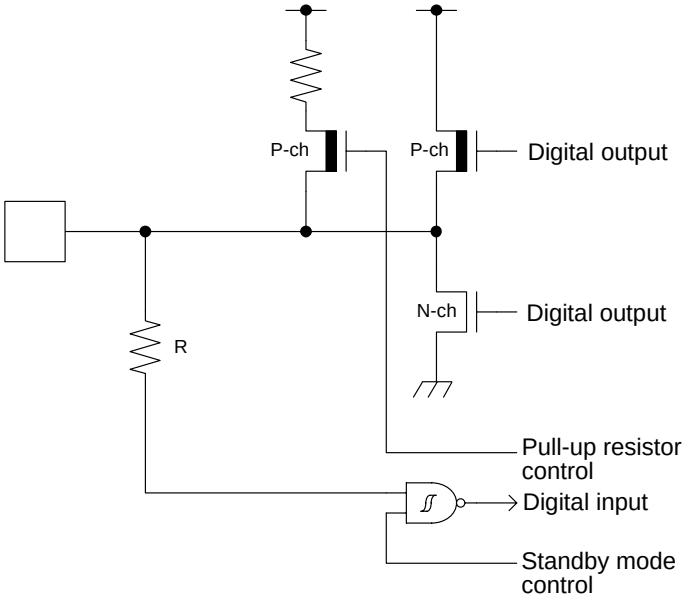	• CMOS level output • CMOS level hysteresis input • With pull-up resistor control • With standby mode control • Pull-up resistor : Approximately 50kΩ • I_{OH} = -12mA, I_{OL} = 12mA

Type	Circuit	Remarks
H	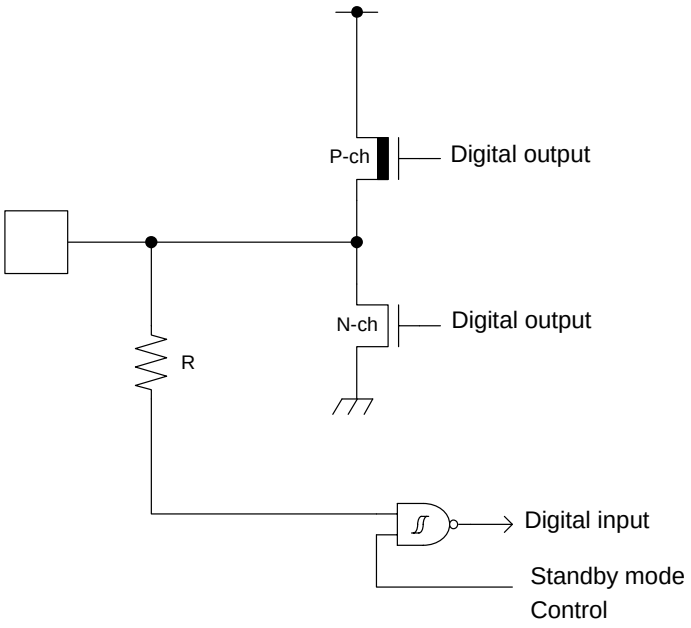	• CMOS level output • CMOS level hysteresis input • With standby mode control
I	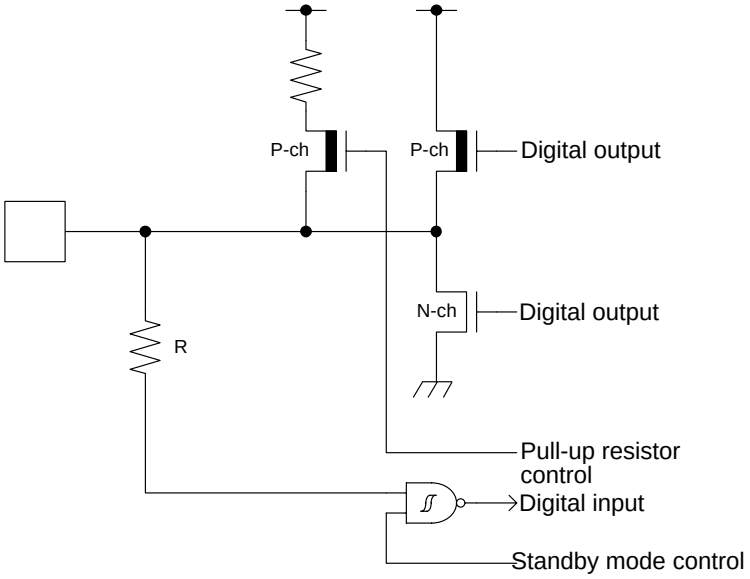	• CMOS level output • CMOS level hysteresis input • 5V tolerant • With standby mode control • I_{OH} = -4mA, I_{OL} = 4mA • Available to control of PZR registers.
J	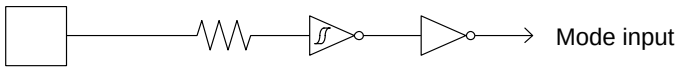	CMOS level hysteresis input

Type	Circuit	Remarks
L	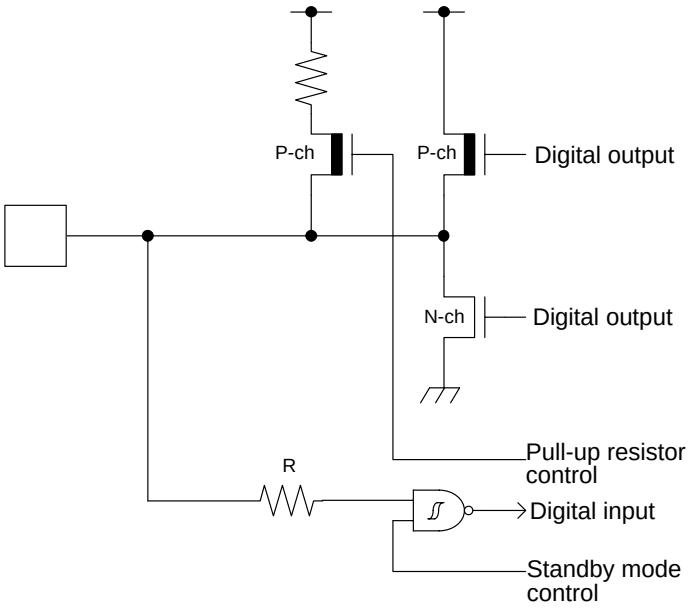	• CMOS level output • CMOS level hysteresis input • With pull-up resistor control • With standby mode control • Pull-up resistor : Approximately 50kΩ • I_{OH} = -8mA, I_{OL} = 8mA
M	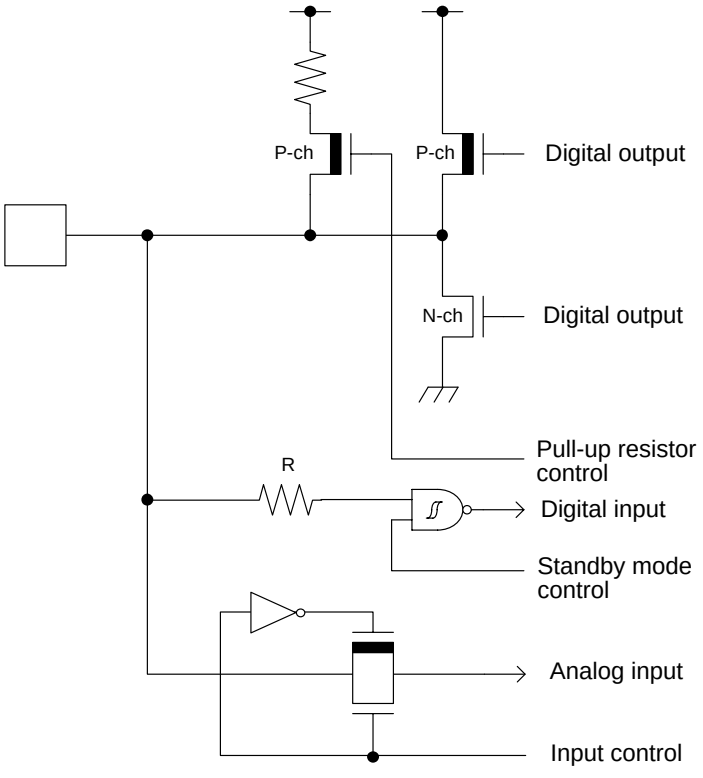	• CMOS level output • CMOS level hysteresis input • With input control • Analog input • With pull-up resistor control • With standby mode control • Pull-up resistor : Approximately 50kΩ • I_{OH} = -8mA, I_{OL} = 8mA

Type	Circuit	Remarks
N	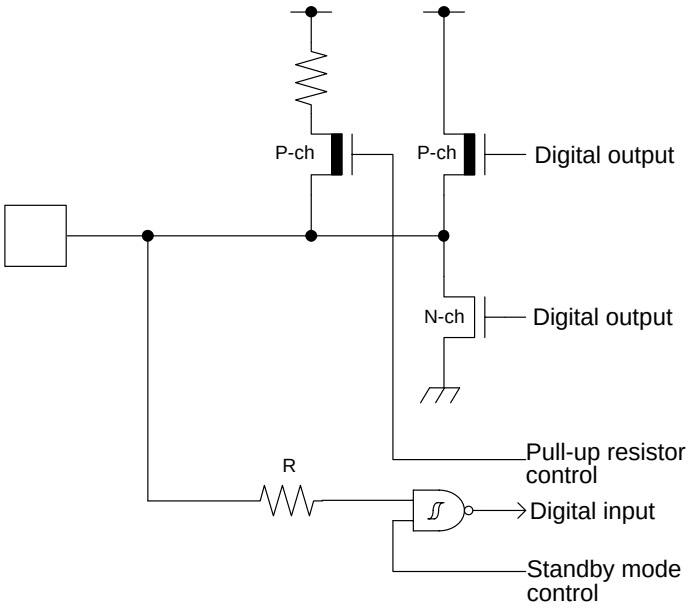	• CMOS level output • CMOS level hysteresis input • With pull-up resistor control • With standby mode control • Pull-up resistor : Approximately 50kΩ • I_{OH} = -4mA, I_{OL} = 4mA(GPIO) • I_{OL} = 20mA(Fast Mode Plus)
O	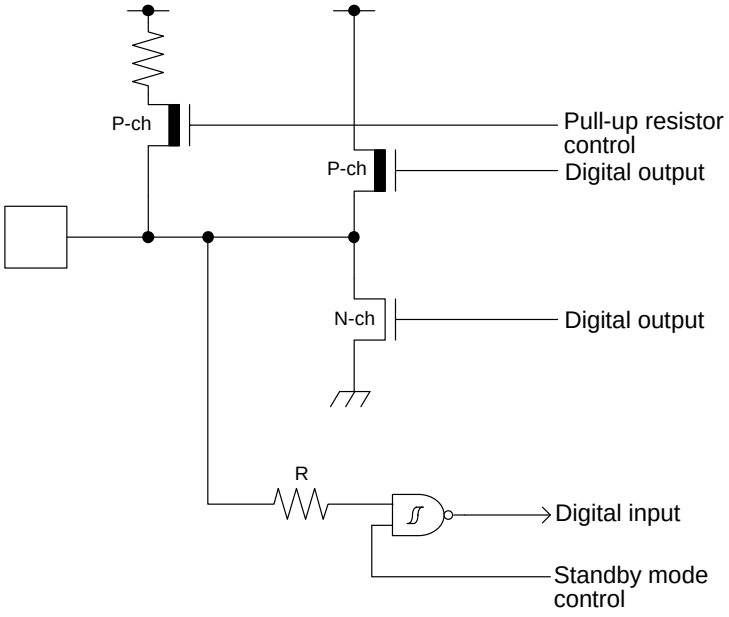	• CMOS level output • CMOS level hysteresis input • 5V tolerant • With pull-up resistor control • With standby mode control • Pull-up resistor : Approximately 50kΩ • I_{OH} = -4mA, I_{OL} = 4mA • For I/O setting, refer to VBAT Domain in the Peripheral Manual

Type	Circuit	Remarks
P	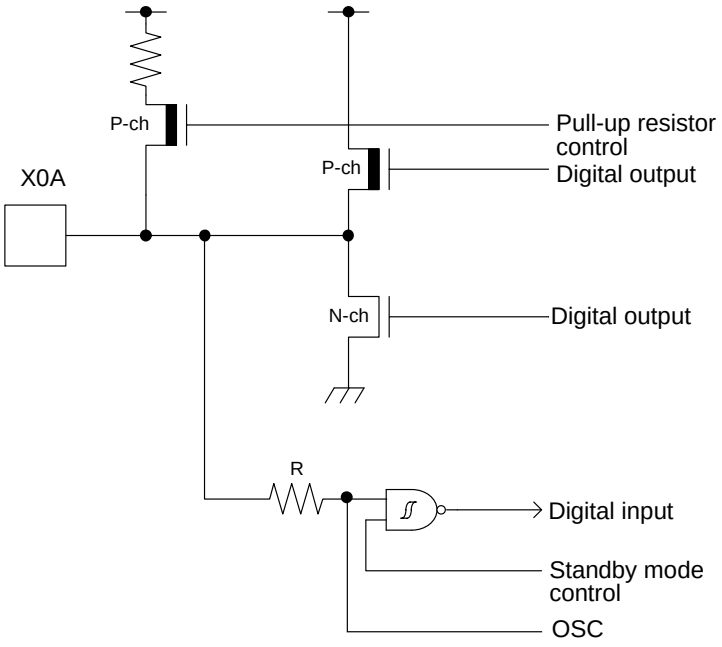	• CMOS level output • CMOS level hysteresis input • With pull-up resistor control • With standby mode control • Pull-up resistor : Approximately 50kΩ • I_{OH} = -4mA, I_{OL} = 4mA • For I/O setting, refer to VBAT Domain in the Peripheral Manual
Q	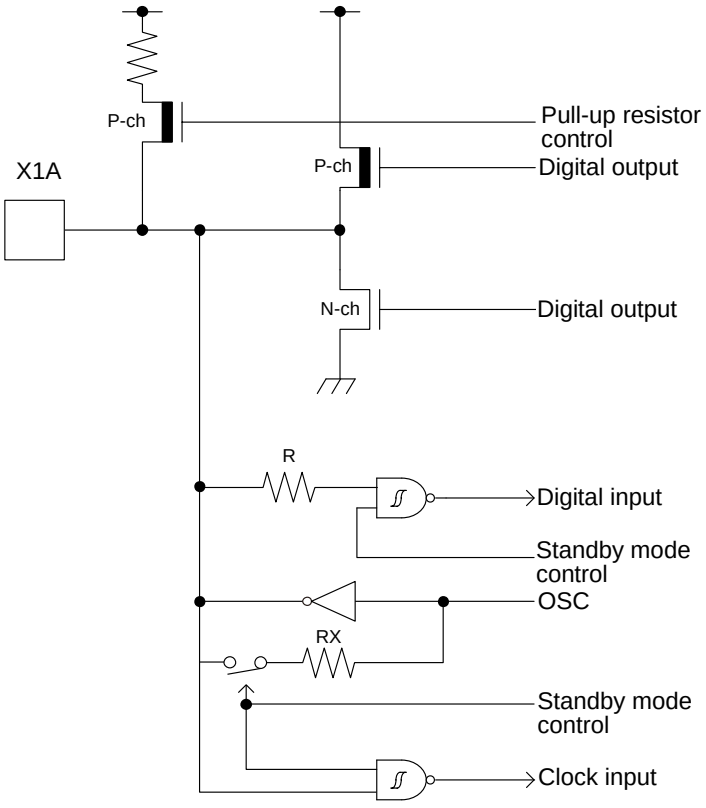	It is possible to select the sub oscillation / GPIO function When the sub oscillation is selected. • Oscillation feedback resistor : Approximately 10MΩ • With Standby mode control • When the GPIO is selected. • CMOS level output. • CMOS level hysteresis input • With pull-up resistor control • With standby mode control • Pull-up resistor : Approximately 50kΩ • I_{OH} = -4mA, I_{OL} = 4mA • For I/O setting, refer to VBAT Domain in the Peripheral Manual

Type	Circuit	Remarks
R	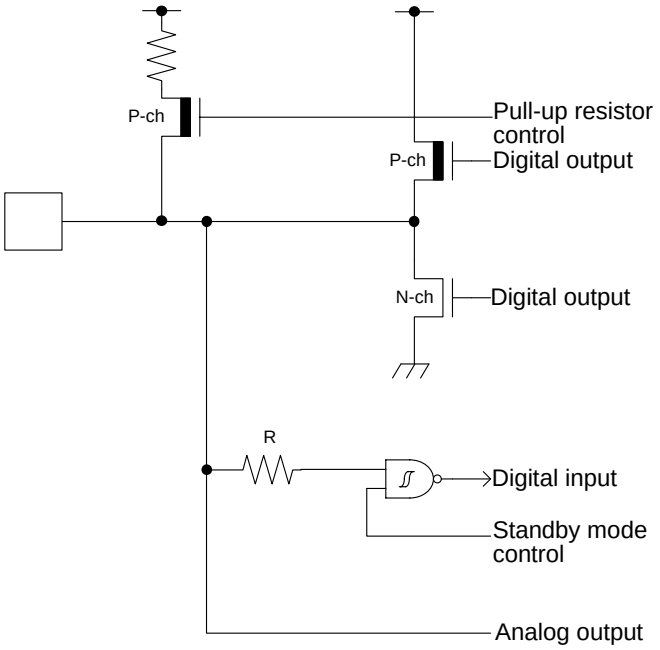	• CMOS level output • CMOS level hysteresis input • Analog output • With pull-up resistor control • With standby mode control • Pull-up resistor : Approximately 50kΩ • I_{OH} = -12mA, I_{OL} = 12mA (4.5V～5.5V) • I_{OH} = -8mA, I_{OL} = 8mA (2.7V～4.5V)

6. Handling Precautions

Any semiconductor devices have inherently a certain rate of failure. The possibility of failure is greatly affected by the conditions in which they are used (circuit conditions, environmental conditions, etc.). This page describes precautions that must be observed to minimize the chance of failure and to obtain higher reliability from your Cypress semiconductor devices.

6.1 Precautions for Product Design

This section describes precautions when designing electronic equipment using semiconductor devices.

■Absolute Maximum Ratings

Semiconductor devices can be permanently damaged by application of stress (voltage, current, temperature, etc.) in excess of certain established limits, called absolute maximum ratings. Do not exceed these ratings.

■Recommended Operating Conditions

Recommended operating conditions are normal operating ranges for the semiconductor device. All the device's electrical characteristics are warranted when operated within these ranges.

Always use semiconductor devices within the recommended operating conditions. Operation outside these ranges may adversely affect reliability and could result in device failure.

No warranty is made with respect to uses, operating conditions, or combinations not represented on the data sheet. Users considering application outside the listed conditions are advised to contact their sales representative beforehand.

■Processing and Protection of Pins

These precautions must be followed when handling the pins which connect semiconductor devices to power supply and input/output functions.

1. Preventing Over-Voltage and Over-Current Conditions

   Exposure to voltage or current levels in excess of maximum ratings at any pin is likely to cause deterioration within the device, and in extreme cases leads to permanent damage of the device. Try to prevent such overvoltage or over-current conditions at the design stage.

2. Protection of Output Pins

   Shorting of output pins to supply pins or other output pins, or connection to large capacitance can cause large current flows. Such conditions if present for extended periods of time can damage the device.
   Therefore, avoid this type of connection.

3. Handling of Unused Input Pins

   Unconnected input pins with very high impedance levels can adversely affect stability of operation. Such pins should be connected through an appropriate resistance to a power supply pin or ground pin.

■Latch-up

Semiconductor devices are constructed by the formation of P-type and N-type areas on a substrate. When subjected to abnormally high voltages, internal parasitic PNPN junctions (called thyristor structures) may be formed, causing large current levels in excess of several hundred mA to flow continuously at the power supply pin. This condition is called latch-up.

CAUTION: The occurrence of latch-up not only causes loss of reliability in the semiconductor device, but can cause injury or damage from high heat, smoke or flame. To prevent this from happening, do the following:

1. Be sure that voltages applied to pins do not exceed the absolute maximum ratings. This should include attention to abnormal noise, surge levels, etc.
2. Be sure that abnormal current flows do not occur during the power-on sequence.

■Observance of Safety Regulations and Standards

Most countries in the world have established standards and regulations regarding safety, protection from electromagnetic interference, etc. Customers are requested to observe applicable regulations and standards in the design of products.

■Fail-Safe Design

Any semiconductor devices have inherently a certain rate of failure. You must protect against injury, damage or loss from such failures by incorporating safety design measures into your facility and equipment such as redundancy, fire protection, and prevention of over-current levels and other abnormal operating conditions.

■Precautions Related to Usage of Devices

Cypress semiconductor devices are intended for use in standard applications (computers, office automation and other office equipment, industrial, communications, and measurement equipment, personal or household devices, etc.).

CAUTION: Customers considering the use of our products in special applications where failure or abnormal operation may directly affect human lives or cause physical injury or property damage, or where extremely high levels of reliability are demanded (such as aerospace systems, atomic energy controls, sea floor repeaters, vehicle operating controls, medical devices for life support, etc.) are requested to consult with sales representatives before such use. The company will not be responsible for damages arising from such use without prior approval.

6.2 Precautions for Package Mounting

Package mounting may be either lead insertion type or surface mount type. In either case, for heat resistance during soldering, you should only mount under Cypress's recommended conditions. For detailed information about mount conditions, contact your sales representative.

■Lead Insertion Type

Mounting of lead insertion type packages onto printed circuit boards may be done by two methods: direct soldering on the board, or mounting by using a socket.

Direct mounting onto boards normally involves processes for inserting leads into through-holes on the board and using the flow soldering (wave soldering) method of applying liquid solder. In this case, the soldering process usually causes leads to be subjected to thermal stress in excess of the absolute ratings for storage temperature. Mounting processes should conform to Cypress recommended mounting conditions.

If socket mounting is used, differences in surface treatment of the socket contacts and IC lead surfaces can lead to contact deterioration after long periods. For this reason it is recommended that the surface treatment of socket contacts and IC leads be verified before mounting.

■Surface Mount Type

Surface mount packaging has longer and thinner leads than lead-insertion packaging, and therefore leads are more easily deformed or bent. The use of packages with higher pin counts and narrower pin pitch results in increased susceptibility to open connections caused by deformed pins, or shorting due to solder bridges.

You must use appropriate mounting techniques. Cypress recommends the solder reflow method, and has established a ranking of mounting conditions for each product. Users are advised to mount packages in accordance with Cypress ranking of recommended conditions.

■Lead-Free Packaging

CAUTION: When ball grid array (BGA) packages with Sn-Ag-Cu balls are mounted using Sn-Pb eutectic soldering, junction strength may be reduced under some conditions of use.

■Storage of Semiconductor Devices

Because plastic chip packages are formed from plastic resins, exposure to natural environmental conditions will cause absorption of moisture. During mounting, the application of heat to a package that has absorbed moisture can cause surfaces to peel, reducing moisture resistance and causing packages to crack. To prevent, do the following:

1. Avoid exposure to rapid temperature changes, which cause moisture to condense inside the product. Store products in locations where temperature changes are slight.
2. Use dry boxes for product storage. Products should be stored below 70% relative humidity, and at temperatures between 5°C and 30°C.
   When you open Dry Package that recommends humidity 40% to 70% relative humidity.
3. When necessary, Cypress packages semiconductor devices in highly moisture-resistant aluminum laminate bags, with a silica gel desiccant. Devices should be sealed in their aluminum laminate bags for storage.
4. Avoid storing packages where they are exposed to corrosive gases or high levels of dust.

■Baking

Packages that have absorbed moisture may be de-moisturized by baking (heat drying). Follow the Cypress recommended conditions for baking.

Condition: 125°C/24 h

■**Static Electricity**

Because semiconductor devices are particularly susceptible to damage by static electricity, you must take the following precautions:

1. Maintain relative humidity in the working environment between 40% and 70%. Use of an apparatus for ion generation may be needed to remove electricity.
2. Electrically ground all conveyors, solder vessels, soldering irons and peripheral equipment.
3. Eliminate static body electricity by the use of rings or bracelets connected to ground through high resistance (on the level of 1 MΩ).
   Wearing of conductive clothing and shoes, use of conductive floor mats and other measures to minimize shock loads is recommended.
4. Ground all fixtures and instruments, or protect with anti-static measures.
5. Avoid the use of styrofoam or other highly static-prone materials for storage of completed board assemblies.

6.3 Precautions for Use Environment

Reliability of semiconductor devices depends on ambient temperature and other conditions as described above.

For reliable performance, do the following:

1. Humidity

   Prolonged use in high humidity can lead to leakage in devices as well as printed circuit boards. If high humidity levels are anticipated, consider anti-humidity processing.
2. Discharge of Static Electricity

   When high-voltage charges exist close to semiconductor devices, discharges can cause abnormal operation. In such cases, use anti-static measures or processing to prevent discharges.
3. Corrosive Gases, Dust, or Oil

   Exposure to corrosive gases or contact with dust or oil may lead to chemical reactions that will adversely affect the device. If you use devices in such conditions, consider ways to prevent such exposure or to protect the devices.
4. Radiation, Including Cosmic Radiation

   Most devices are not designed for environments involving exposure to radiation or cosmic radiation. Users should provide shielding as appropriate.
5. Smoke, Flame

   CAUTION: Plastic molded devices are flammable, and therefore should not be used near combustible substances. If devices begin to smoke or burn, there is danger of the release of toxic gases.

Customers considering the use of Cypress products in other special environmental conditions should consult with sales representatives.

7. Handling Devices

■Power supply pins

In products with multiple VCC and VSS pins, respective pins at the same potential are interconnected within the device in order to prevent malfunctions such as latch-up. However, all of these pins should be connected externally to the power supply or ground lines in order to reduce electromagnetic emission levels, to prevent abnormal operation of strobe signals caused by the rise in the ground level, and to conform to the total output current rating.

Moreover, connect the current supply source with each POWER pins and GND pins of this device at low impedance. It is also advisable that a ceramic capacitor of approximately 0.1 µF be connected as a bypass capacitor between VCC and VSS near this device.

■Power supply pins

A malfunction may occur when the power supply voltage fluctuates rapidly even though the fluctuation is within the guaranteed operating range of the VCC power supply voltage. As a rule of voltage stabilization, suppress voltage fluctuation so that the fluctuation in VCC ripple (peak-to-peak value) at the commercial frequency (50 Hz/60 Hz) does not exceed 10% of the standard VCC value, and the transient fluctuation rate does not exceed 0.1 V/µs at a momentary fluctuation such as switching the power supply.

■Crystal oscillator circuit

Noise near the X0/X1 and X0A/X1A pins may cause the device to malfunction. Design the printed circuit board so that X0/X1, X0A/X1A pins, the crystal oscillator (or ceramic oscillator), and the bypass capacitor to ground are located as close to the device as possible.

It is strongly recommended that the PC board artwork be designed such that the X0/X1 and X0A/X1A pins are surrounded by ground plane as this is expected to produce stable operation.

Evaluate oscillation of your using crystal oscillator by your mount board.

■Sub crystal oscillator

This series sub oscillator circuit is low gain to keep the low current consumption.
The crystal oscillator to fill the following conditions is recommended for sub crystal oscillator to stabilize the oscillation.

- Surface mount type
  - Size : More than 3.2 mm × 1.5 mm
  - Load capacitance : Approximately 6 pF to 7 pF
- Lead type
  - Load capacitance : Approximately 6 pF to 7 pF

■Using an external clock

When using an external clock as an input of the main clock, set X0/X1 to the external clock input, and input the clock to X0. X1(PE3) can be used as a general-purpose I/O port.
Similarly, when using an external clock as an input of the sub clock, set X0A/X1A to the external clock input, and input the clock to X0A. X1A (P47) can be used as a general-purpose I/O port.

- Example of Using an External Clock

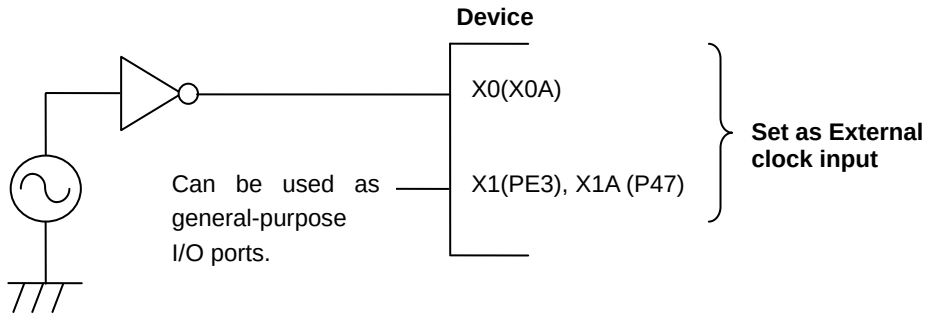

■Handling when using Multi-function serial pin as I²C pin

If it is using the multi-function serial pin as I²C pins, P-ch transistor of digital output is always disabled.
However, I²C pins need to keep the electrical characteristic like other pins and not to connect to the external I²C bus system with power OFF.

■C Pin

This series contains the regulator. Be sure to connect a smoothing capacitor (C_S) for the regulator between the C pin and the GND pin. Please use a ceramic capacitor or a capacitor of equivalent frequency characteristics as a smoothing capacitor.
However, some laminated ceramic capacitors have the characteristics of capacitance variation due to thermal fluctuation (F characteristics and Y5V characteristics). Please select the capacitor that meets the specifications in the operating conditions to use by evaluating the temperature characteristics of a capacitor.
A smoothing capacitor of about 4.7 µF would be recommended for this series.

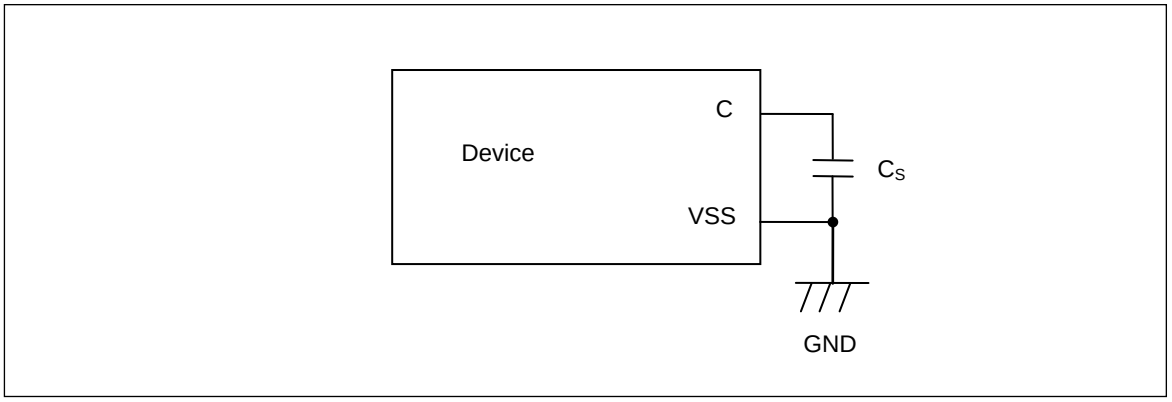

■Mode pins (MD0)

Connect the MD pin (MD0) directly to VCC or VSS pins. Design the printed circuit board such that the pull-up/down resistance stays low, as well as the distance between the mode pins and VCC pins or VSS pins is as short as possible and the connection impedance is low, when the pins are pulled-up/down such as for switching the pin level and rewriting the Flash memory data. It is because of preventing the device erroneously switching to test mode due to noise.

■Notes on power-on

Turn power on/off in the following order or at the same time.
If not using the A/D converter and D/A converter, connect AVCC = VCC and AVSS = VSS.

Turning on : VBAT → VCC

VCC → AVCC → AVRH

Turning off : VCC → VBAT

AVRH → AVCC → VCC

■Serial Communication

There is a possibility to receive wrong data due to the noise or other causes on the serial communication.
Therefore, design a printed circuit board so as to avoid noise.

Consider the case of receiving wrong data due to noise, perform error detection such as by applying a checksum of data at the end. If an error is detected, retransmit the data.

■Differences in features among the products with different memory sizes and between Flash products and MASK products

The electric characteristics including power consumption, ESD, latch-up, noise characteristics, and oscillation characteristics among the products with different memory sizes and between Flash products and MASK products are different because chip layout and memory structures are different.

If you are switching to use a different product of the same series, please make sure to evaluate the electric characteristics.

■Pull-Up function of 5V tolerant I/O

Please do not input the signal more than VCC voltage at the time of Pull-Up function use of 5V tolerant I/O.

■Adjoining wiring on circuit board

If wiring of the crystal oscillation circuit X1A adjoins and also runs in parallel with the wiring of P48/VREGCTL, there is a possibility that the oscillation erroneously counts because X1A has noise with the change of P48/VREGCTL. Keep as much distance as possible between both wirings and insert the ground pattern between them in order to avoid this possibility.

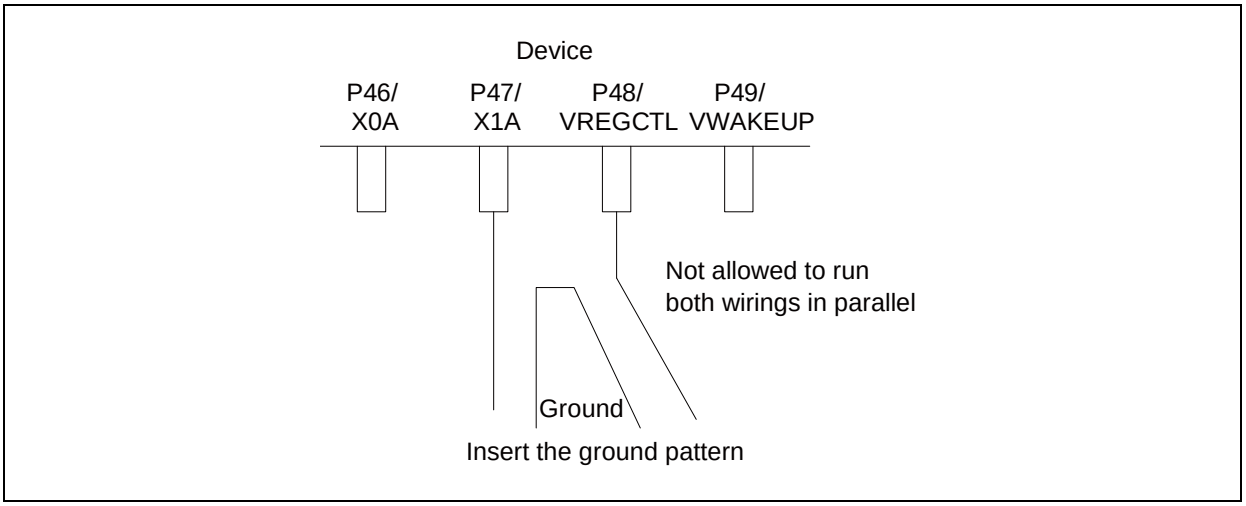

■Handling when using debug pins

When debug pins(TDO/TMS/TDI/TCK/TRSTX or SWO/SWDIO/SWCLK) are set to GPIO or other peripheral functions, only set them as output, do not set them as input.

8. Block Diagram

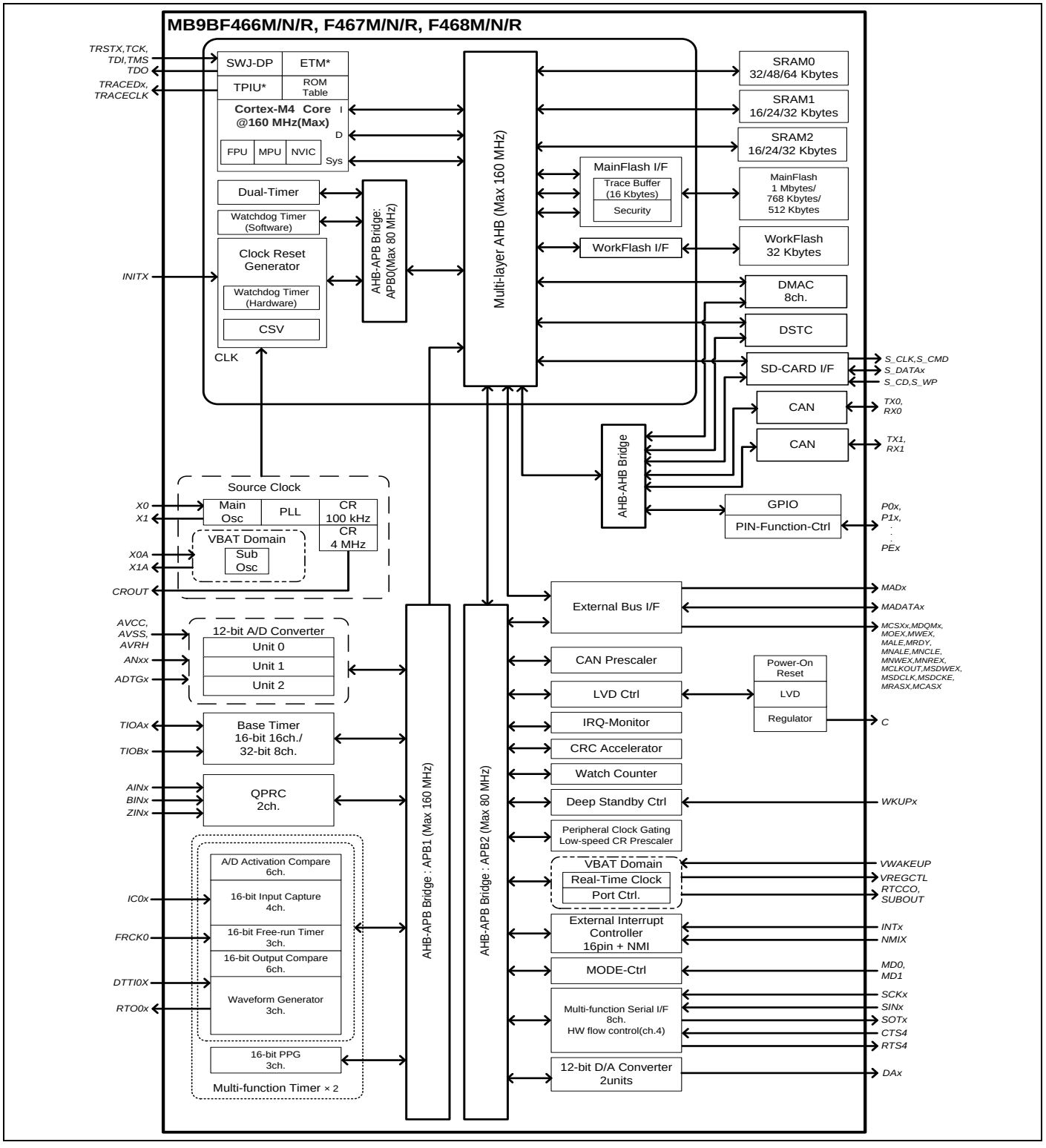

*: For the MB9BF466M, MB9BF467M and MB9BF468M, ETM is not available.

9. Memory Size

See "Memory size" in "Product Lineup" to confirm the memory size.

9.1 Memory Map

■Memory Map (1)

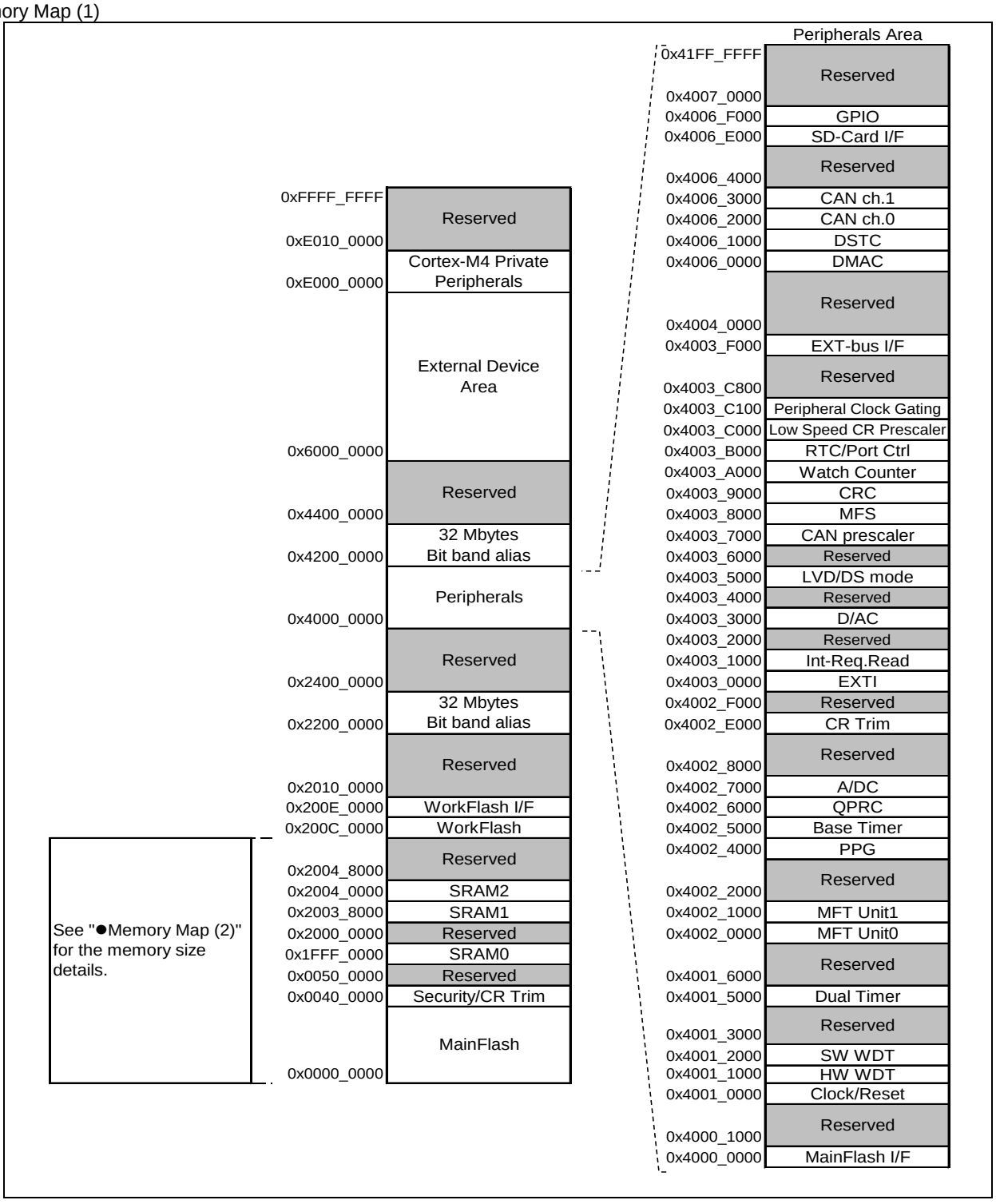

■Memory Map (2)

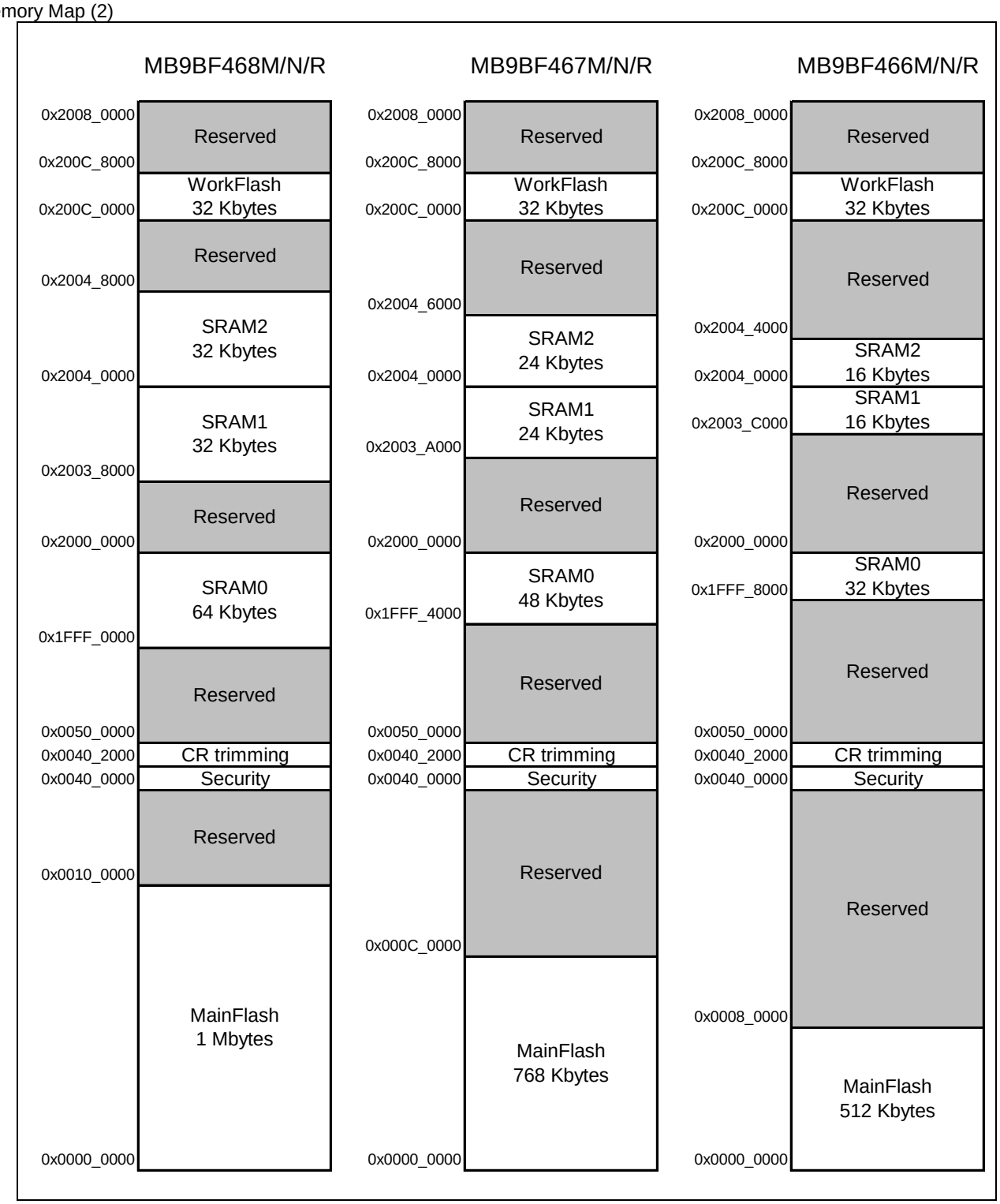
MB9BF468M/N/R
0x2008_0000
Reserved
0x200C_8000
WorkFlash
32 Kbytes
0x200C_0000
Reserved
0x2004_8000
SRAM2
32 Kbytes
0x2004_0000
SRAM1
32 Kbytes
0x2003_8000
Reserved
0x2000_0000
SRAM0
64 Kbytes
0x1FFF_0000
Reserved
0x0050_0000
0x0040_2000
CR trimming
0x0040_0000
Security
Reserved
0x0010_0000
MainFlash
1 Mbytes
0x0000_0000
MB9BF467M/N/R
0x2008_0000
Reserved
0x200C_8000
WorkFlash
32 Kbytes
0x200C_0000
Reserved
0x2004_6000
SRAM2
24 Kbytes
0x2004_0000
SRAM1
24 Kbytes
0x2003_A000
Reserved
0x2000_0000
SRAM0
48 Kbytes
0x1FFF_4000
Reserved
0x0050_0000
0x0040_2000
CR trimming
0x0040_0000
Security
Reserved
0x000C_0000
MainFlash
768 Kbytes
0x0000_0000
MB9BF466M/N/R
0x2008_0000
Reserved
0x200C_8000
WorkFlash
32 Kbytes
0x200C_0000
Reserved
0x2004_4000
SRAM2
16 Kbytes
0x2004_0000
SRAM1
16 Kbytes
0x2003_C000
Reserved
0x2000_0000
SRAM0
32 Kbytes
0x1FFF_8000
Reserved
0x0050_0000
0x0040_2000
CR trimming
0x0040_0000
Security
Reserved
0x0008_0000
MainFlash
512 Kbytes
0x0000_0000

■Peripheral Address Map

Start address	End address	Bus	Peripherals
0x4000_0000	0x4000_0FFF	AHB	MainFlash I/F register
0x4000_1000	0x4000_FFFF		Reserved
0x4001_0000	0x4001_0FFF	APB0	Clock/Reset Control
0x4001_1000	0x4001_1FFF		Hardware Watchdog timer
0x4001_2000	0x4001_2FFF		Software Watchdog timer
0x4001_3000	0x4001_4FFF		Reserved
0x4001_5000	0x4001_5FFF		Dual-Timer
0x4001_6000	0x4001_FFFF		Reserved
0x4002_0000	0x4002_0FFF	APB1	Multi-function timer unit0
0x4002_1000	0x4002_1FFF		Multi-function timer unit1
0x4002_2000	0x4003_FFFF		Reserved
0x4002_4000	0x4002_4FFF		PPG
0x4002_5000	0x4002_5FFF		Base Timer
0x4002_6000	0x4002_6FFF		Quadrature Position/Revolution Counter
0x4002_7000	0x4002_7FFF		A/D Converter
0x4002_8000	0x4002_DFFF		Reserved
0x4002_E000	0x4002_EFFF		Internal CR trimming
0x4002_F000	0x4002_FFFF		Reserved
0x4003_0000	0x4003_0FFF	APB2	External Interrupt Controller
0x4003_1000	0x4003_1FFF		Interrupt Request Batch-Read Function
0x4003_2000	0x4003_4FFF		Reserved
0x4003_3000	0x4003_3FFF		D/A Converter
0x4003_4000	0x4003_4FFF		Reserved
0x4003_5000	0x4003_57FF		Low Voltage Detector
0x4003_5800	0x4003_5FFF		Deep standby mode Controller
0x4003_6000	0x4003_6FFF		Reserved
0x4003_7000	0x4003_7FFF		CAN prescaler
0x4003_8000	0x4003_8FFF		Multi-function serial Interface
0x4003_9000	0x4003_9FFF		CRC
0x4003_A000	0x4003_AFFF		Watch Counter
0x4003_B000	0x4003_BFFF		RTC/Port Ctrl
0x4003_C000	0x4003_C0FF		Low-speed CR Prescaler
0x4003_C100	0x4003_C7FF		Peripheral Clock Gating
0x4003_C800	0x4003_EFFF		Reserved
0x4003_F000	0x4003_FFFF		External Memory interface
0x4004_0000	0x4005_FFFF	AHB	Reserved
0x4006_0000	0x4006_0FFF		DMAC register
0x4006_1000	0x4006_1FFF		DSTC register
0x4006_2000	0x4006_2FFF		CAN ch.0
0x4006_3000	0x4006_3FFF		CAN ch.1
0x4006_4000	0x4006_DFFF		Reserved
0x4006_E000	0x4006_EFFF		SD-Card I/F
0x4006_F000	0x4006_FFFF		GPIO
0x4006_7000	0x41FF_FFFF		Reserved
0x200E_0000	0x200E_FFFF		WorkFlash I/F register

10. Pin Status in Each CPU State

The terms used for pin status have the following meanings.

- INITX=0

  This is the period when the INITX pin is the "L" level.

- INITX=1

  This is the period when the INITX pin is the "H" level.

- SPL=0

  This is the status that the standby pin level setting bit (SPL) in the standby mode control register (STB_CTL) is set to "0".

- SPL=1

  This is the status that the standby pin level setting bit (SPL) in the standby mode control register (STB_CTL) is set to "1".

- Input enabled

  Indicates that the input function can be used.

- Internal input fixed at "0"

  This is the status that the input function cannot be used. Internal input is fixed at "L".

- Hi-Z

  Indicates that the pin drive transistor is disabled and the pin is put in the Hi-Z state.

- Setting disabled

  Indicates that the setting is disabled.

- Maintain previous state

  Maintains the state that was immediately prior to entering the current mode.
  If a built-in peripheral function is operating, the output follows the peripheral function.
  If the pin is being used as a port, that output is maintained.

- Analog input is enabled

  Indicates that the analog input is enabled.

- Trace output

  Indicates that the trace function can be used.

- GPIO selected

  In Deep standby mode, pins switch to the general-purpose I/O port.

- Setting prohibition

  Prohibition of a setting by specification limitation.

■List of Pin Status

Pin status type	Function group	Power-on reset or low-voltage detection state	INITX input state	Device internal reset state	Run mode or SLEEP mode state	TIMER mode, RTC mode, or STOP mode state		Deep standby RTC mode or Deep standby STOP mode state		Return from Deep standby mode state
		Power supply unstable	Power supply stable		Power supply stable	Power supply stable		Power supply stable		Power supply stable
		-	INITX=0	INITX=1	INITX=1	INITX=1		INITX=1		INITX=1
		-	-	-	-	SPL=0	SPL=1	SPL=0	SPL=1	-
A	GPIO selected	Setting disabled	Setting disabled	Setting disabled	Maintain previous state	Maintain previous state	Hi-Z / Internal input fixed at "0"	GPIO selected Internal input fixed at "0"	Hi-Z / Internal input fixed at "0"	GPIO selected
	Main crystal oscillator input pin/ External main clock input selected	Input enabled	Input enabled	Input enabled	Input enabled	Input enabled	Input enabled	Input enabled	Input enabled	Input enabled
B	GPIO selected	Setting disabled	Setting disabled	Setting disabled	Maintain previous state	Maintain previous state	Hi-Z / Internal input fixed at "0"	GPIO selected Internal input fixed at "0"	Hi-Z / Internal input fixed at "0"	GPIO selected
	External main clock input selected	Setting disabled	Setting disabled	Setting disabled	Maintain previous state	Maintain previous state	Hi-Z / Internal input fixed at "0"	Maintain previous state	Hi-Z / Internal input fixed at "0"	Maintain previous state
	Main crystal oscillator output pin	Hi-Z / Internal input fixed at "0"/ or Input enable	Hi-Z / Internal input fixed at "0"	Hi-Z / Internal input fixed at "0"	Maintain previous state/When oscillation stops*1, Hi-Z / Internal input fixed at "0"	Maintain previous state/When oscillation stops*1, Hi-Z / Internal input fixed at "0"	Maintain previous state/When oscillation stops*1, Hi-Z / Internal input fixed at "0"	Maintain previous state/When oscillation stops*1, Hi-Z / Internal input fixed at "0"	Maintain previous state/When oscillation stops*1, Hi-Z / Internal input fixed at "0"	Maintain previous state/When oscillation stops*1, Hi-Z / Internal input fixed at "0"
C	INITX input pin	Pull-up / Input enabled	Pull-up / Input enabled	Pull-up / Input enabled	Pull-up / Input enabled	Pull-up / Input enabled	Pull-up / Input enabled	Pull-up / Input enabled	Pull-up / Input enabled	Pull-up / Input enabled
D	Mode input pin	Input enabled	Input enabled	Input enabled	Input enabled	Input enabled	Input enabled	Input enabled	Input enabled	Input enabled
E	Mode input pin	Input enabled	Input enabled	Input enabled	Input enabled	Input enabled	Input enabled	Input enabled	Input enabled	Input enabled
	GPIO selected	Setting disabled	Setting disabled	Setting disabled	Maintain previous state	Maintain previous state	Hi-Z / Input enabled	GPIO selected	Hi-Z / Input enabled	GPIO selected

Pin status type	Function group	Power-on reset or low-voltage detection state	INITX input state	Device internal reset state	Run mode or SLEEP mode state	TIMER mode, RTC mode, or STOP mode state		Deep standby RTC mode or Deep standby STOP mode state		Return from Deep standby mode state
		Power supply unstable	Power supply stable		Power supply stable	Power supply stable		Power supply stable		Power supply stable
		-	INITX=0	INITX=1	INITX=1	INITX=1		INITX=1		INITX=1
		-	-	-	-	SPL=0	SPL=1	SPL=0	SPL=1	-
F	NMIX selected	Setting disabled	Setting disabled	Setting disabled	Maintain previous state	Maintain previous state	Maintain previous state	WKUP input enabled	Hi-Z / WKUP input enabled	GPIO selected
	Resource other than above selected	Hi-Z	Hi-Z / Input enabled	Hi-Z / Input enabled			Hi-Z / Internal input fixed at "0"			
	GPIO selected									Maintain previous state
G	JTAG selected	Hi-Z	Pull-up / Input enabled	Pull-up / Input enabled	Maintain previous state	Maintain previous state	Maintain previous state	Maintain previous state	Maintain previous state	Maintain previous state
	GPIO selected	Setting disabled	Setting disabled	Setting disabled			Hi-Z / Internal input fixed at "0"	GPIO selected Internal input fixed at "0"	Hi-Z / Internal input fixed at "0"	GPIO selected
H	JTAG selected	Hi-Z	Pull-up / Input enabled	Pull-up / Input enabled	Maintain previous state	Maintain previous state	Maintain previous state	Maintain previous state	Maintain previous state	Maintain previous state
	Resource other than above selected	Setting disabled	Setting disabled	Setting disabled			Hi-Z / Internal input fixed at "0"	GPIO selected Internal input fixed at "0"	Hi-Z / Internal input fixed at "0"	GPIO selected
	GPIO selected									
I	Resource selected	Hi-Z	Hi-Z / Input enabled	Hi-Z / Input enabled	Maintain previous state	Maintain previous state	Hi-Z / Internal input fixed at "0"	GPIO selected Internal input fixed at "0"	Hi-Z / Internal input fixed at "0"	GPIO selected
	GPIO selected									
J	Analog output selected	Setting disabled	Setting disabled	Setting disabled	Maintain previous state	*2	*3	GPIO selected Internal input fixed at "0"	Hi-Z / Internal input fixed at "0"	GPIO selected
	Resource other than above selected	Hi-Z	Hi-Z / Input enabled	Hi-Z / Input enabled		Maintain previous state	Hi-Z / Internal input fixed at "0"			
	GPIO selected									

Pin status type	Function group	Power-on reset or low-voltage detection state	INITX input state	Device internal reset state	Run mode or SLEEP mode state	TIMER mode, RTC mode, or STOP mode state		Deep standby RTC mode or Deep standby STOP mode state		Return from Deep standby mode state
		Power supply unstable	Power supply stable		Power supply stable	Power supply stable		Power supply stable		Power supply stable
		-	INITX=0	INITX=1	INITX=1	INITX=1		INITX=1		INITX=1
		-	-	-	-	SPL=0	SPL=1	SPL=0	SPL=1	-
K	External interrupt enabled selected	Setting disabled	Setting disabled	Setting disabled	Maintain previous state	Maintain previous state	Maintain previous state	GPIO selected Internal input fixed at "0"	Hi-Z / Internal input fixed at "0"	GPIO selected
	Resource other than above selected	Hi-Z	Hi-Z / Input enabled	Hi-Z / Input enabled			Hi-Z / Internal input fixed at "0"			
	GPIO selected									
L	Analog input selected	Hi-Z	Hi-Z / Internal input fixedat "0" / Analog input enabled	Hi-Z / Internal input fixedat "0" / Analog input enabled	Hi-Z / Internal input fixed at "0" / Analog input enabled	Hi-Z / Internal input fixed at "0" / Analog input enabled	Hi-Z / Internal input fixed at "0" / Analog input enabled	Hi-Z / Internal input fixed at "0" / Analog input enabled	Hi-Z / Internal input fixed at "0" / Analog input enabled	Hi-Z / Internal input fixed at "0" / Analog input enabled
	Resource other than above selected	Setting disabled	Setting disabled	Setting disabled	Maintain previous state	Maintain previous state	Hi-Z / Internal input fixed at "0"	GPIO selected Internal input fixed at "0"	Hi-Z / Internal input fixed at "0"	GPIO selected
	GPIO selected									

Pin status type	Function group	Power-on reset or low-voltage detection state	INITX input state	Device internal reset state	Run mode or SLEEP mode state	TIMER mode, RTC mode, or STOP mode state		Deep standby RTC mode or Deep standby STOP mode state		Return from Deep standby mode state
		Power supply unstable	Power supply stable		Power supply stable	Power supply stable		Power supply stable		Power supply stable
		-	INITX=0	INITX=1	INITX=1	INITX=1		INITX=1		INITX=1
		-	-	-	-	SPL=0	SPL=1	SPL=0	SPL=1	-
M	Analog input selected	Hi-Z	Hi-Z / Internal input fixed at "0" / Analog input enabled	Hi-Z / Internal input fixed at "0" / Analog input enabled	Hi-Z / Internal input fixed at "0" / Analog input enabled	Hi-Z / Internal input fixed at "0" / Analog input enabled	Hi-Z / Internal input fixed at "0" / Analog input enabled	Hi-Z / Internal input fixed at "0" / Analog input enabled	Hi-Z / Internal input fixed at "0" / Analog input enabled	Hi-Z / Internal input fixed at "0" / Analog input enabled
	External interrupt enabled selected	Setting disabled	Setting disabled	Setting disabled	Maintain previous state	Maintain previous state	Maintain previous state	GPIO selected Internal input fixed at "0"	Hi-Z / Internal input fixed at "0"	GPIO selected
	Resource other than above selected						Hi-Z / Internal input fixed at "0"			
	GPIO selected									
N	Analog input selected	Hi-Z	Hi-Z / Internal input fixed at"0" / Analog input enabled	Hi-Z / Internal input fixed at "0" / Analog input enabled	Hi-Z / Internal input fixed at "0" / Analog input enabled	Hi-Z / Internal input fixed at "0" / Analog input enabled	Hi-Z / Internal input fixed at "0" / Analog input enabled	Hi-Z / Internal input fixed at "0" / Analog input enabled	Hi-Z / Internal input fixed at "0" / Analog input enabled	Hi-Z / Internal input fixed at "0" / Analog input enabled
	Trace selected	Setting disabled	Setting disabled	Setting disabled	Maintain previous state	Maintain previous state	Trace output	GPIO selected Internal input fixed at "0"	Hi-Z / Internal input fixed at "0"	GPIO selected
	Resource other than above selected						Hi-Z / Internal input fixed at "0"			
	GPIO selected									

Pin status type	Function group	Power-on reset or low-voltage detection state	INITX input state	Device internal reset state	Run mode or SLEEP mode state	TIMER mode, RTC mode, or STOP mode state		Deep standby RTC mode or Deep standby STOP mode state		Return from Deep standby mode state
		Power supply unstable	Power supply stable		Power supply stable	Power supply stable		Power supply stable		Power supply stable
		-	INITX=0	INITX=1	INITX=1	INITX=1		INITX=1		INITX=1
		-	-	-	-	SPL=0	SPL=1	SPL=0	SPL=1	-
O	Analog input selected	Hi-Z	Hi-Z / Internal input fixed at "0" / Analog input enabled	Hi-Z / Internal input fixed at "0" / Analog input enabled	Hi-Z / Internal input fixed at "0" / Analog input enabled	Hi-Z / Internal input fixed at "0" / Analog input enabled	Hi-Z / Internal input fixed at "0" / Analog input enabled	Hi-Z / Internal input fixed at "0" / Analog input enabled	Hi-Z / Internal input fixed at "0" / Analog input enabled	Hi-Z / Internal input fixed at "0" / Analog input enabled
	Trace selected	Setting disabled	Setting disabled	Setting disabled	Maintain previous state	Maintain previous state	Trace output	GPIO selected Internal input fixed at "0"	Hi-Z / Internal input fixed at "0"	GPIO selected
	External interrupt enabled selected						Maintain previous state			
	Resource other than above selected						Hi-Z / Internal input fixed at "0"			
	GPIO selected									
P	Analog input selected	Hi-Z	Hi-Z / Internal input fixedat "0" / Analog input enabled	Hi-Z / Internal input fixedat "0" / Analog input enabled	Hi-Z / Internal input fixed at "0" / Analog input enabled	Hi-Z / Internal input fixed at "0" / Analog input enabled	Hi-Z / Internal input fixed at "0" / Analog input enabled	Hi-Z / Internal input fixed at "0" / Analog input enabled	Hi-Z / Internal input fixed at "0" / Analog input enabled	Hi-Z / Internal input fixed at "0" / Analog input enabled
	WKUP enabled	Setting disabled	Setting disabled	Setting disabled	Maintain previous state	Maintain previous state	Maintain previous state	WKUP input enabled	Hi-Z / WKUP input enabled	GPIO selected
	Resource other than above selected						Hi-Z / Internal input fixed at "0"	GPIO selected Internal input fixed at "0"	Hi-Z / Internal input fixed at "0"	
	GPIO selected									

Pin status type	Function group	Power-on reset or low-voltage detection state	INITX input state	Device internal reset state	Run mode or SLEEP mode state	TIMER mode, RTC mode, or STOP mode state		Deep standby RTC mode or Deep standby STOP mode state		Return from Deep standby mode state
		Power supply unstable	Power supply stable		Power supply stable	Power supply stable		Power supply stable		Power supply stable
		-	INITX=0	INITX=1	INITX=1	INITX=1		INITX=1		INITX=1
		-	-	-	-	SPL=0	SPL=1	SPL=0	SPL=1	-
Q	WKUP enabled	Setting disabled	Setting disabled	Setting disabled	Maintain previous state	Maintain previous state	Maintain previous state	WKUP input enabled	Hi-Z / WKUP input enabled	GPIO selected
	External interrupt enabled selected							GPIO selected Internal input fixed at "0"	Hi-Z / Internal input fixed at "0"	
	Resource other than above selected	Hi-Z	Hi-Z / Input enabled	Hi-Z / Input enabled			Hi-Z / Internal input fixed at "0"			
	GPIO selected									
R	GPIO selected	Hi-Z	Hi-Z / Input enabled	Hi-Z / Input enabled	Maintain previous state	Maintain previous state	Hi-Z / Internal input fixed at "0"	GPIO selected Internal input fixed at "0"	Hi-Z / Internal input fixed at "0"	GPIO selected

*1 : Oscillation is stopped at Sub timer mode, sub CR timer mode, RTC mode, STOP mode, Deep standby RTC mode, and Deep standby STOP mode.

*2 : Maintain previous state at timer mode. GPIO selected Internal input fixed at "0" at RTC mode, STOP mode.

*3 : Maintain previous state at timer mode. Hi-Z/Internal input fixed at "0" at RTC mode, STOP mode.

■List of VBAT Domain Pin Status

VBAT pin status type	Function group	VBAT Power-on reset	INITX input state	Device internal reset state	Run mode or SLEEP mode state	TIMER mode, RTC mode, or STOP mode state		Deep standby RTC mode or Deep standby STOP mode state		Return from Deep standby mode state	VBAT RTC mode state	Return from VBAT RTC mode state
		Power supply unstable	Power supply stable		Power supply stable	Power supply stable		Power supply stable		Power supply stable	Power supply stable	Power supply stable
		-	INITX=0	INITX=1	INITX=1	INITX=1		INITX=1		INITX=1	-	-
		-	-	-	-	SPL=0	SPL=1	SPL=0	SPL=1	-	-	-
S	GPIO selected	Setting disabled	Setting disabled	Setting disabled	Maintain previous state	Maintain previous state	Hi-Z / Internal input fixed at "0"	GPIO selected Internal input fixed at "0"	Hi-Z / Internal input fixed at "0"	GPIO selected	Setting prohibition	-
	Sub crystal oscillator input pin / External sub clock input selected	Input enabled	Input enabled	Input enabled	Input enabled	Input enabled	Input enabled	Input enabled	Input enabled	Input enabled	Maintain previous state	Maintain previous state
T	GPIO selected	Setting disabled	Setting disabled	Setting disabled	Maintain previous state	Maintain previous state	Hi-Z / Internal input fixed at "0"	GPIO selected Internal input fixed at "0"	Hi-Z / Internal input fixed at "0"	GPIO selected	Setting prohibition	-
	External sub clock input selected	Setting disabled	Setting disabled	Setting disabled	Maintain previous state	Maintain previous state	Hi-Z / Internal input fixed at "0"	Maintain previous state	Hi-Z / Internal input fixed at "0"	Maintain previous state	Maintain previous state	Maintain previous state
	Sub crystal oscillator output pin	Hi-Z / Internal input fixed at "0"/ or Input enable	Hi-Z / Internal input fixed at "0"	Hi-Z / Internal input fixed at "0"	Maintain previous state	Maintain previous state/When oscillation stops*, Hi-Z / Internal input fixed at "0"	Maintain previous state/When oscillation stops*, Hi-Z / Internal input fixed at "0"	Maintain previous state/When oscillation stops*, Hi-Z/ Internal input fixed at "0"	Maintain previous state/When oscillation stops*, Hi-Z/ Internal input fixed at "0"	Maintain previous state/When oscillation stops*, Hi-Z/ Internal input fixed at "0"	Maintain previous state	Maintain previous state
U	Resource selected / GPIO selected	Hi-Z	Maintain previous state	Maintain previous state	Maintain previous state	Maintain previous state	Maintain previous state	Maintain previous state	Maintain previous state	Maintain previous state	Maintain previous state	Maintain previous state

* : Oscillation is stopped at STOP mode and Deep standby STOP mode.

11. Electrical Characteristics

11.1 Absolute Maximum Ratings

Parameter	Symbol	Rating		Unit	Remarks
		Min	Max		
Power supply voltage *1, *2	V_{CC}	V_{SS} - 0.5	V_{SS} + 6.5	V	
Power supply voltage (VBAT) *1, *3	V_{BAT}	V_{SS} - 0.5	V_{SS} + 6.5	V	
Analog power supply voltage *1, *4	AV_{CC}	V_{SS} - 0.5	V_{SS} + 6.5	V	
Analog reference voltage *1, *4	AVRH	V_{SS} - 0.5	V_{SS} + 6.5	V	
Input voltage *1	V_I	V_{SS} - 0.5	V_{CC} + 0.5 (≤ 6.5V)	V	
		V_{SS} - 0.5	V_{SS} + 6.5	V	5V tolerant
Analog pin input voltage *1	V_{IA}	V_{SS} - 0.5	AV_{CC} + 0.5 (≤ 6.5V)	V	
Output voltage *1	V_O	V_{SS} - 0.5	V_{CC} + 0.5 (≤ 6.5V)	V	
"L" level maximum output current *5	I_{OL}	-	10	mA	4mA type
			20	mA	8mA type
			20	mA	12mA type
			22.4	mA	I^2C Fm+
"L" level average output current *6	I_{OLAV}	-	4	mA	4mA type
			8	mA	8mA type
			12	mA	12mA type
			20	mA	I^2C Fm+
"L" level total maximum output current	$\sum I_{OL}$	-	100	mA	
"L" level total maximum output current *7	$\sum I_{OLAV}$	-	50	mA	
"H" level maximum output current *5	I_{OH}	-	- 10	mA	4mA type
			20	mA	8mA type
			- 20	mA	12mA type
"H" level average output current *6	I_{OHAV}	-	- 4	mA	4mA type
			8	mA	8mA type
			- 12	mA	12mA type
"H" level total maximum output current	$\sum I_{OH}$	-	- 100	mA	
"H" level total average output current *7	$\sum I_{OHAV}$	-	- 50	mA	
Storage temperature	T_{STG}	- 55	+ 150	°C	

*1: These parameters are based on the condition that $V_{SS} = AV_{SS} = 0.0V$.

*2: V_{CC} must not drop below V_{SS} - 0.5V.

*3: V_{BAT} must not drop below V_{SS} - 0.5V.

*4: Ensure that the voltage does not exceed V_{CC} + 0.5V, for example, when the power is turned on.

*5: The maximum output current is defined as the value of the peak current flowing through any one of the corresponding pins.

*6: The average output current is defined as the average current value flowing through any one of the corresponding pins for a 100ms period.

*7: The total average output current is defined as the average current value flowing through all of corresponding pins for a 100ms.

WARNING:

Semiconductor devices may be permanently damaged by application of stress (including, without limitation, voltage, current or temperature) in excess of absolute maximum ratings.
Do not exceed any of these ratings.

11.2 Recommended Operating Conditions

Parameter		Symbol	Conditions	Value		Unit	Remarks
				Min	Max		
Power supply voltage		V_{CC}	-	2.7	5.5	V	
Power supply voltage (VBAT)		V_{BAT}	-	2.7	5.5	V	
Analog power supply voltage		AV_{CC}	-	2.7	5.5	V	AV_{CC}=V_{CC}
Analog reference voltage		AVRH	-	AV_{SS}	AV_{CC}	V	
Operating temperature	Junction temperature	Tj	-	- 40	+ 125	°C	
	Ambient temperature	Ta	-	- 40	*	°C	

*: The maximum temperature of the ambient temperature (Ta) can guarantee a range that does not exceed the junction temperature (Tj).
The calculation formula of the ambient temperature (Ta) is shown below.

$$Ta(Max) = Tj(Max) - Pd(Max) \times \theta ja$$

Pd : Power dissipation (W)
θja : Package thermal resistance (°C/W)

$$Pd\ (Max) = V_{CC} \times I_{CC}\ (Max) + \Sigma\ (I_{OL} \times V_{OL}) + \Sigma\ ((V_{CC} - V_{OH}) \times (-I_{OH}))$$

I_{OL} : "L" level output current
I_{OH} : "H" level output current
V_{OL} : "L" level output voltage
V_{OH} : "H" level output voltage

Package thermal resistance and maximum permissible power for each package are shown below.
The operation is guaranteed maximum permissible power or less for semiconductor devices.

■Table for package thermal resistance and maximum permissible power

Package	Printed circuit board	Thermal resistance θja (°C/W)	Maximum permissible power (mW)	
			Ta=+85°C	Ta=+105°C
FPT-80P-M37 (0.5mm pitch)	Single-layered both sides	60	667	333
	4 layers	39	1026	513
FPT-80P-M40 (0.65mm pitch)	Single-layered both sides	58	690	335
	4 layers	38	1053	526
FPT-100P-M23 (0.5mm pitch)	Single-layered both sides	57	702	351
	4 layers	38	1053	526
FPT-100P-M36 (0.65mm pitch)	Single-layered both sides	48	833	417
	4 layers	34	1177	588
FPT-120P-M37 (0.5mm pitch)	Single-layered both sides	62	645	323
	4 layers	43	930	465
BGA-112P-M05 (0.5mm pitch)	Single-layered both sides	60	667	333
	4 layers	40	1000	500
BGA-144P-M09 (0.5mm pitch)	Single-layered both sides	55	727	364
	4 layers	40	1000	500

WARNING:

The recommended operating conditions are required in order to ensure the normal operation of the semiconductor device. All of the device's electrical characteristics are warranted when the device is operated under these conditions.
Any use of semiconductor devices will be under their recommended operating condition.
Operation under any conditions other than these conditions may adversely affect reliability of device and could result in device failure.
No warranty is made with respect to any use, operating conditions or combinations not represented on this data sheet. If you are considering application under any conditions other than listed herein, please contact sales representatives beforehand.

■Calculation method of power dissipation (Pd)

The power dissipation is shown in the following formula.

$Pd = V_{CC} \times I_{CC} + \Sigma (I_{OL} \times V_{OL}) + \Sigma ((V_{CC}-V_{OH}) \times (-I_{OH}))$

I_{OL} : "L" level output current

I_{OH} : "H" level output current

V_{OL} : "L" level output voltage

V_{OH} : "H" level output voltage

I_{CC} is a current consumed in device.
It can be analyzed as follows.

$I_{CC} = I_{CC}(INT) + \Sigma I_{CC}(IO)$

$I_{CC}(INT)$: Current consumed in internal logic and memory, etc. through regulator

$\Sigma I_{CC}(IO)$: Sum of current (I/O switching current) consumed in output pin

For I_{CC} (INT), it can be anticipated by "(1) Current Rating" in "3. DC Characteristics" (This rating value does not include I_{CC} (IO) for a value at pin fixed).
For Icc (IO), it depends on system used by customers.
The calculation formula is shown below.

$I_{CC}(IO) = (C_{INT} + C_{EXT}) \times V_{CC} \times fsw$

C_{INT} : Pin internal load capacitance

C_{EXT} : External load capacitance of output pin

f_{SW} : Pin switching frequency

Parameter	Symbol	Conditions	Capacitance value
Pin internal load capacitance	C_{INT}	4mA type	1.93pF
		8mA type	3.45pF
		12mA type	3.42pF

Calculate I_{CC} (Max) as follows when the power dissipation can be evaluated by yourself.

1. Measure current value I_{CC} (Typ) at normal temperature (+25°C).
2. Add maximum leak current value I_{CC} (leak_max) at operating on a value in (1).

$I_{CC}(Max) = I_{CC}(Typ) + I_{CC}(leak_max)$

Parameter	Symbol	Conditions	Current value
Maximum leak current at operating	I_{CC}(leak_max)	Tj = +125°C	45.5mA
		Tj = +105°C	26.8mA
		Tj = +85°C	16.2mA

■**Current explanation diagram**

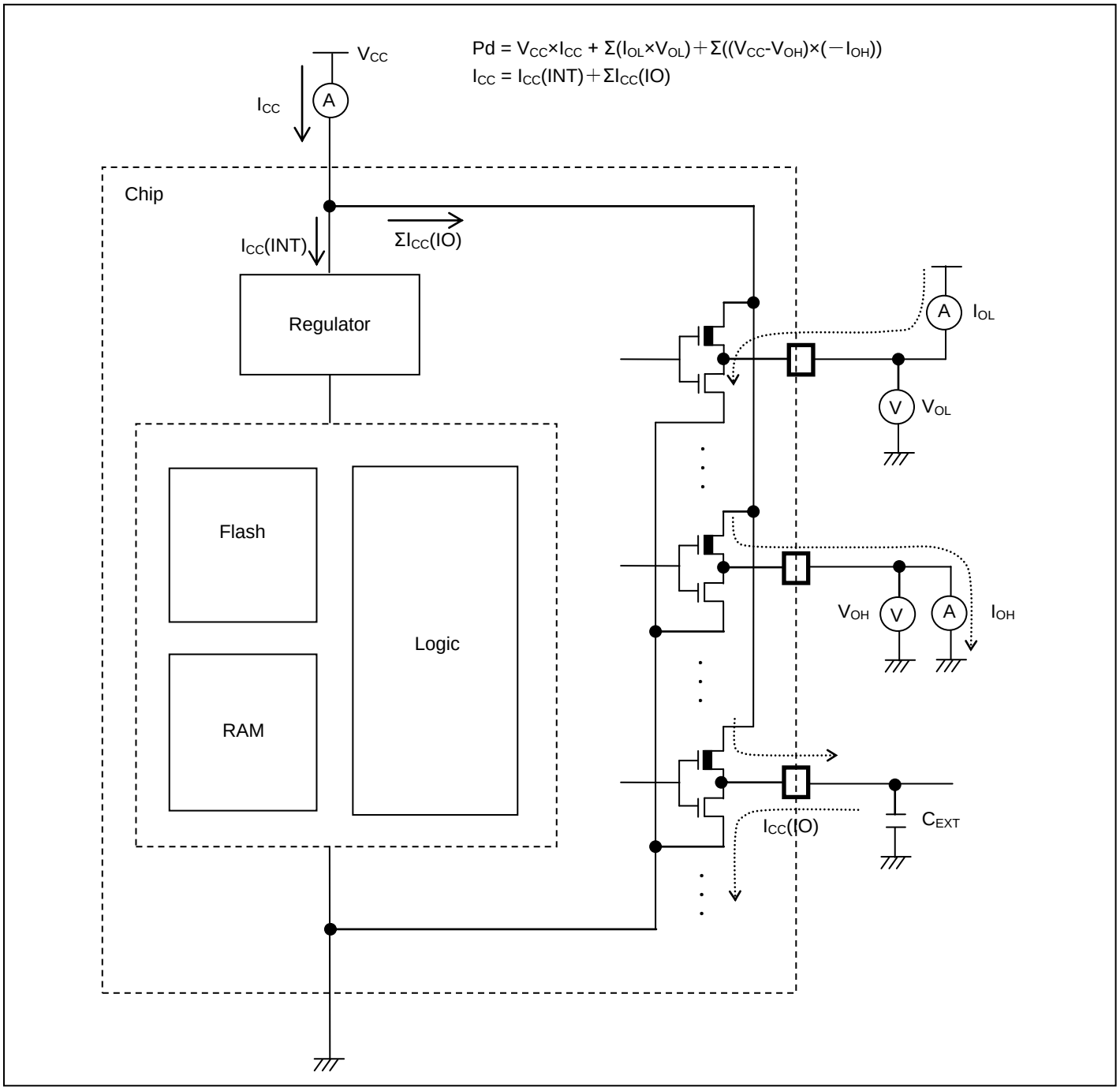

11.3 DC Characteristics

11.3.1 Current Rating

Parameter	Symbol	Pin name	Conditions	Frequency*4	Value		Unit	Remarks
					Typ*1	Max*2		
Power supply current	I_{CC}	VCC	Normal operation*5,*6 (PLL)	160MHz	54	103	mA	*3 When all peripheral clocks are ON
				144MHz	49	98		
				120MHz	41	90		
				100MHz	35	84		
				80MHz	28	77		
				60MHz	22	71		
				40MHz	16	64		
				20MHz	8.9	58		
				8MHz	5.1	54		
				4MHz	3.8	53		
				160MHz	34	83	mA	*3 When all peripheral clocks are OFF
				144MHz	31	80		
				120MHz	26	75		
				100MHz	22	71		
				80MHz	18	67		
				60MHz	14	63		
				40MHz	10	59		
				20MHz	6.2	55		
				8MHz	3.8	53		
				4MHz	3.1	52		

Parameter	Symbol	Pin name	Conditions	Frequency*7	Value		Unit	Remarks
					Typ*1	Max*2		
Power supply current	I_{CC}	VCC	Normal operation*8 (PLL)	160MHz	74	126	mA	*3 When all peripheral clocks are ON
				144MHz	68	120		
				120MHz	59	112		
				100MHz	52	104		
				80MHz	44	97		
				60MHz	36	89		
				40MHz	27	79		
				20MHz	17	67		
				8MHz	8.3	58		
				4MHz	5.4	55		
				160MHz	51	103	mA	*3 When all peripheral clocks are OFF
				144MHz	47	100		
				120MHz	42	94		
				100MHz	37	90		
				80MHz	33	85		
				60MHz	28	80		
				40MHz	21	73		
				20MHz	13	64		
				8MHz	6.9	56		
				4MHz	4.6	54		

*1: Ta=+25°C, V_{CC}=3.3V

*2: Tj=+125°C, V_{CC}=5.5V

*3: When all ports are fixed.

*4: Frequency is a value of HCLK. PCLK0=PCLK1=PCLK2=HCLK/2

*5: When operating flash accelerator mode and trace buffer function (FRWTR.RWT = 10, FBFCR.BE = 1)

*6: Data access is nothing to MainFlash memory

*7: Frequency is a value of HCLK. PCLK0=PCLK2=HCLK/2, PCLK1=HCLK

*8: When stopping flash accelerator mode and trace buffer function (FRWTR.RWT = 10, FBFCR.BE = 0)

Parameter	Symbol	Pin name	Conditions	Frequency*4 (MHz)	Value		Unit	Remarks
					Typ*1	Max*2		
Power supply current	I_{CC}	VCC	Normal operation*5 (PLL)	72MHz	46	98	mA	*3 When all peripheral clocks are ON
				60MHz	40	92		
				48MHz	33	85		
				36MHz	27	78		
				24MHz	19	70		
				12MHz	11	61		
				8MHz	8.5	58		
				4MHz	5.5	55		
				72MHz	33	85	mA	*3 When all peripheral clocks are OFF
				60MHz	29	81		
				48MHz	25	76		
				36MHz	20	71		
				24MHz	15	65		
				12MHz	9.2	59		
				8MHz	6.9	56		
				4MHz	4.6	54		

*1: Ta=+25°C, V_{CC}=3.3V

*2: Tj=+125°C, V_{CC}=5.5V

*3: When all ports are fixed.

*4: Frequency is a value of HCLK. PCLK0=PCLK1=PCLK2=HCLK

*5: When 0 wait-cycle mode (FRWTR.RWT = 00, FSYNDN.SD = 00)

Parameter	Symbol	Pin name	Conditions	Frequency*4	Value		Unit	Remarks
					Typ*1	Max*2		
Power supply current	I_{CC}	VCC	Normal operation*5 (built-in high-speed CR)	4MHz	3.3	51	mA	*3 When all peripheral clocks are ON
					2.8	51	mA	*3 When all peripheral clocks are OFF
			Normal operation*5 (sub oscillation)	32kHz	0.64	48	mA	*3 When all peripheral clocks are ON
					0.56	48	mA	*3 When all peripheral clocks are OFF
			Normal operation*5 (built-in low-speed CR)	100kHz	0.64	48	mA	*3 When all peripheral clocks are ON
					0.58	48	mA	*3 When all peripheral clocks are OFF

*1: Ta=+25°C, V_{CC}=3.3V

*2: Tj=+125°C, V_{CC}=5.5V

*3: When all ports are fixed.

*4: Frequency is a value of HCLK. PCLK0=PCLK1=PCLK2=HCLK/2

*5: When 0 wait-cycle mode (FRWTR.RWT = 00, FSYNDN.SD = 000)

Parameter	Symbol	Pin name	Conditions	Frequency*4	Value		Unit	Remarks
					Typ*1	Max*2		
Power supply current	I_{CCS}	VCC	SLEEP operation (PLL)	160MHz	35	84	mA	*3 When all peripheral clocks are ON
				144MHz	32	81		
				120MHz	27	76		
				100MHz	23	72		
				80MHz	19	68		
				60MHz	15	64		
				40MHz	11	60		
				20MHz	6.5	55		
				8MHz	4.1	53		
				4MHz	3.3	52		
				160MHz	16	65	mA	*3 When all peripheral clocks are OFF
				144MHz	14	63		
				120MHz	12	61		
				100MHz	11	60		
				80MHz	9.0	58		
				60MHz	7.4	56		
				40MHz	5.6	54		
				20MHz	3.9	53		
				8MHz	2.9	52		
				4MHz	2.6	51		

Parameter	Symbol	Pin name	Conditions	Frequency*5	Value		Unit	Remarks
					Typ*1	Max*2		
Power supply current	I_{CCS}	VCC	SLEEP operation (PLL)	72MHz	22	71	mA	*3 When all peripheral clocks are ON
				60MHz	19	68		
				48MHz	16	64		
				36MHz	12	61		
				24MHz	9.0	58		
				12MHz	5.8	55		
				8MHz	4.6	54		
				4MHz	3.6	52		
				72MHz	9.5	58	mA	*3 When all peripheral clocks are OFF
				60MHz	8.3	57		
				48MHz	7.1	56		
				36MHz	5.8	55		
				24MHz	4.6	53		
				12MHz	3.5	52		
				8MHz	3.0	52		
				4MHz	2.7	51		

*1: Ta=+25°C, V_{CC}=3.3V

*2: Tj=+125°C, V_{CC}=5.5V

*3: When all ports are fixed.

*4: Frequency is a value of HCLK. PCLK0=PCLK1=PCLK2=HCLK/2

*5: Frequency is a value of HCLK. PCLK0=PCLK1=PCLK2=HCLK

Parameter	Symbol	Pin name	Conditions	Frequency*4	Value		Unit	Remarks
					Typ*1	Max*2		
Power supply current	I_{CCS}	VCC	SLEEP operation (built-in high-speed CR)	4MHz	1.5	49	mA	*3 When all peripheral clocks are ON
					1.0	49	mA	*3 When all peripheral clocks are OFF
			SLEEP operation (sub oscillation)	32kHz	0.59	48	mA	*3 When all peripheral clocks are ON
					0.51	48	mA	*3 When all peripheral clocks are OFF
			SLEEP operation (built-in low-speed CR)	100kHz	0.61	48	mA	*3 When all peripheral clocks are ON
					0.53	48	mA	*3 When all peripheral clocks are OFF

*1: Ta=+25°C, V_{CC}=3.3V

*2: Tj=+125°C, V_{CC}=5.5V

*3: When all ports are fixed.

*4: Frequency is a value of HCLK. PCLK0=PCLK1=PCLK2=HCLK/2

Parameter	Symbol	Pin name	Conditions	Frequency	Value		Unit	Remarks
					Typ*1	Max*2		
Power supply current	I_{CCH}	VCC	STOP mode	-	0.33	1.8	mA	*3, *4 Ta=+25°C
					-	15	mA	*3, *4 Ta=+85°C
					-	22	mA	*3, *4 Ta=+105°C
	I_{CCT}		TIMER mode (built-in high-speed CR)	4MHz	0.70	2.2	mA	*3, *4 Ta=+25°C
					-	16	mA	*3, *4 Ta=+85°C
					-	22	mA	*3, *4 Ta=+105°C
			TIMER mode (sub oscillation)	32kHz	0.33	1.8	mA	*3, *4 Ta=+25°C
					-	15	mA	*3, *4 Ta=+85°C
					-	22	mA	*3, *4 Ta=+105°C
			TIMER mode (built-in low-speed CR)	100kHz	0.34	1.8	mA	*3, *4 Ta=+25°C
					-	15	mA	*3, *4 Ta=+85°C
					-	22	mA	*3, *4 Ta=+105°C
	I_{CCR}		RTC mode (sub oscillation)	32kHz	0.33	1.8	mA	*3, *4 Ta=+25°C
					-	15	mA	*3, *4 Ta=+85°C
					-	22	mA	*3, *4 Ta=+105°C

*1: V_{CC}=3.3V

*2: V_{CC}=5.5V

*3: When all ports are fixed.

*4: When LVD is off

Parameter	Symbol	Pin name	Conditions	Frequency	Value		Unit	Remarks
					Typ*1	Max*2		
Power supply current	I_{CCHD}	VCC	Deep standby STOP mode (When RAM is off)	-	29	140	µA	*3, *4 Ta=+25°C
					-	644	µA	*3, *4 Ta=+85°C
					-	1011	µA	*3, *4 Ta=+105°C
			Deep standby STOP mode (When RAM is on)		48	273	µA	*3, *4 Ta=+25°C
					-	2676	µA	*3, *4 Ta=+85°C
					-	4162	µA	*3, *4 Ta=+105°C
	I_{CCRD}		Deep standby RTC mode (When RAM is off)	32kHz	29	140	µA	*3, *4 Ta=+25°C
					-	644	µA	*3, *4 Ta=+85°C
					-	1011	µA	*3, *4 Ta=+105°C
			Deep standby RTC mode (When RAM is on)		48	273	µA	*3, *4 Ta=+25°C
					-	2676	µA	*3, *4 Ta=+85°C
					-	4162	µA	*3, *4 Ta=+105°C
	I_{CCVBAT}	VBAT	RTC stop	-	0.015	0.29	µA	*3, *4, *5 Ta=+25°C
					-	5.77	µA	*3, *4, *5 Ta=+85°C
					-	10.6	µA	*3, *4, *5 Ta=+105°C
			RTC operation		1.53	22.6	µA	*3, *4 Ta=+25°C
					-	35.2	µA	*3, *4 Ta=+85°C
					-	41.8	µA	*3, *4 Ta=+105°C

*1: V_{CC}=3.3V

*2: V_{CC}=5.5V

*3: When all ports are fixed.

*4: When LVD is off

*5: When sub oscillation is OFF

Parameter	Symbol	Pin name	Conditions	Value			Unit	Remarks
				Min	Typ	Max		
Low-voltage detection circuit (LVD) power supply current	I_{CCLVD}	VCC	At operation	-	4	7	µA	For occurrence of interrupt
Main flash memory write/erase current	$I_{CCFLASH}$		At Write/Erase	-	13.4	15.9	mA	
Work flash memory write/erase current	$I_{CCWFLASH}$		At Write/Erase	-	11.5	13.6	mA	

■Peripheral current dissipation

Clock system	Peripheral	Unit	Frequency (MHz)			Unit	Remarks
			40	80	160		
HCLK	GPIO	All ports	0.22	0.43	0.85	mA	
	DMAC	-	0.74	1.48	2.88		
	DSTC	-	0.32	0.61	1.17		
	External bus I/F	-	0.14	0.27	0.55		
	SD card I/F	-	0.93	1.81	3.63		
	CAN	1ch.	0.02	0.06	0.11		
PCLK1	Base timer	4ch.	0.16	0.34	0.66	mA	
	Multi-functional timer/PPG	1unit/4ch.	0.55	1.09	2.17		
	Quadrature position/Revolution counter	1unit	0.04	0.09	0.17		
	A/DC	1unit	0.20	0.39	0.78		
PCLK2	Muli-function serial	1ch.	0.31	0.62	-	mA	

11.3.2 Pin Characteristics

(V_{CC} = AV_{CC} = 2.7V to 5.5V, V_{SS} = AV_{SS} = 0V)

Parameter	Symbol	Pin name	Conditions	Value			Unit	Remarks
				Min	Typ	Max		
"H" level input voltage (hysteresis input)	V_{IHS}	CMOS hysteresis input pin, MD0, MD1	-	V_{CC}×0.8	-	V_{CC} + 0.3	V	
		5V tolerant input pin	-	V_{CC}×0.8	-	V_{SS} + 5.5	V	
		Input pin doubled as I^2C Fm+	-	V_{CC}×0.7	-	V_{SS} + 5.5	V	
"L" level input voltage (hysteresis input)	V_{ILS}	CMOS hysteresis input pin, MD0, MD1	-	V_{SS} - 0.3	-	V_{CC}×0.2	V	
		5V tolerant input pin	-	V_{SS} - 0.3	-	V_{CC}×0.2	V	
		Input pin doubled as I^2C Fm+	-	V_{SS}	-	V_{CC}×0.3	V	
"H" level output voltage	V_{OH}	4mA type	V_{CC} ≥ 4.5 V, I_{OH} = - 4mA V_{CC} < 4.5 V, I_{OH} = - 2mA	V_{CC} - 0.5	-	V_{CC}	V	
		8mA type	V_{CC} ≥ 4.5 V, I_{OH} = - 8mA V_{CC} < 4.5 V, I_{OH} = - 4mA	V_{CC} - 0.5	-	V_{CC}	V	
		12mA type	V_{CC} ≥ 4.5 V, I_{OH} = - 12mA V_{CC} < 4.5 V, I_{OH} = - 8mA	V_{CC} - 0.5	-	V_{CC}	V	
		The pin doubled as I^2C Fm+	V_{CC} ≥ 4.5 V, I_{OH} = - 4mA V_{CC} < 4.5 V, I_{OH} = - 3mA	V_{CC} - 0.5	-	V_{CC}	V	At GPIO

Parameter	Symbol	Pin name	Conditions	Value			Unit	Remarks
				Min	Typ	Max		
"L" level output voltage	V_{OL}	4mA type	$V_{CC} \geq 4.5$ V, I_{OL} = 4mA	V_{SS}	-	0.4	V	
			$V_{CC} < 4.5$ V, I_{OL} = 2mA					
		8mA type	$V_{CC} \geq 4.5$ V, I_{OH} = 8mA	V_{SS}	-	0.4	V	
			$V_{CC} < 4.5$ V, I_{OH} = 4mA					
		12mA type	$V_{CC} \geq 4.5$ V, I_{OL} = 12mA	V_{SS}	-	0.4	V	
			$V_{CC} < 4.5$ V, I_{OL} = 8mA					
		The pin doubled as I^2C Fm+	$V_{CC} \geq 4.5$ V, I_{OH} = 4mA	V_{SS}	-	0.4	V	At GPIO
			$V_{CC} < 4.5$ V, I_{OH} = 3mA					
			$V_{CC} \leq 5.5$ V, I_{OH} = 20mA					At I^2C Fm+
Input leak current	I_{IL}	-	-	- 5	-	+ 5	µA	
Pull-up resistor value	R_{PU}	Pull-up pin	$V_{CC} \geq 4.5$ V	25	50	100	kΩ	
			$V_{CC} < 4.5$ V	30	80	200		
Input capacitance	C_{IN}	Other than VCC, VBAT, VSS, AVCC, AVSS, AVRH	-	-	5	15	pF	

11.4 AC Characteristics

11.4.1 Main Clock Input Characteristics

(V_{CC} = 2.7V to 5.5V, V_{SS} = 0V)

Parameter	Symbol	Pin name	Conditions	Value		Unit	Remarks
				Min	Max		
Input frequency	F_{CH}	X0, X1	$V_{CC} \geq 4.5V$	4	48	MHz	When crystal oscillator is connected
			$V_{CC} < 4.5V$	4	20		
			$V_{CC} \geq 4.5V$	4	48	MHz	When using external clock
			$V_{CC} < 4.5V$	4	20		
Input clock cycle	t_{CYLH}		$V_{CC} \geq 4.5V$	20.83	250	ns	When using external clock
			$V_{CC} < 4.5V$	50	250		
Input clock pulse width	-		P_{WH}/t_{CYLH}, P_{WL}/t_{CYLH}	45	55	%	When using external clock
Input clock rising time and falling time	t_{CF}, t_{CR}		-	-	5	ns	When using external clock
Internal operating clock*1 frequency	F_{CC}	-	-	-	160	MHz	Base clock (HCLK/FCLK)
	F_{CP0}	-	-	-	80	MHz	APB0 bus clock*2
	F_{CP1}	-	-	-	160	MHz	APB1 bus clock*2
	F_{CP2}	-	-	-	80	MHz	APB2 bus clock*2
Internal operating clock*1 cycle time	t_{CYCC}	-	-	6.25	-	ns	Base clock (HCLK/FCLK)
	t_{CYCP0}	-	-	12.5	-	ns	APB0 bus clock*2
	t_{CYCP1}	-	-	6.25	-	ns	APB1 bus clock*2
	t_{CYCP2}	-	-	12.5	-	ns	APB2 bus clock*2

*1: For more information about each internal operating clock, see "Chapter: Clock" in "FM4 Family Peripheral Manual".

*2: For about each APB bus which each peripheral is connected to, see " Block Diagram" in this data sheet.

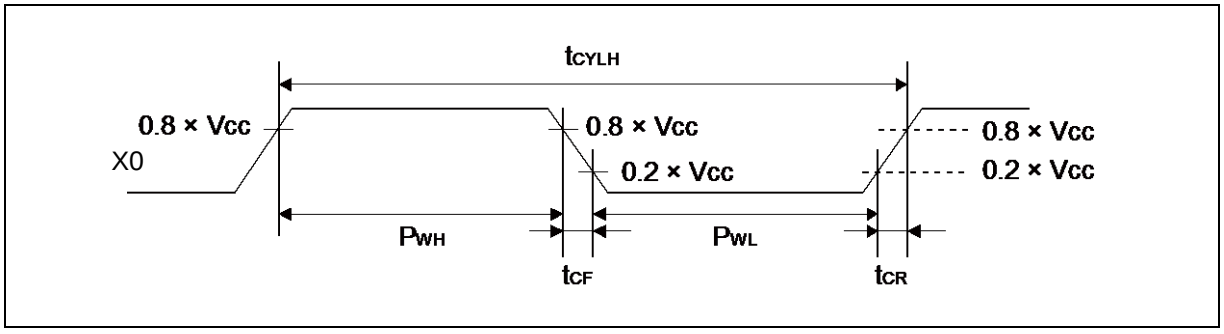

11.4.2 Sub Clock Input Characteristics

(V_{BAT} = 2.7V to 5.5V, V_{SS} = 0V)

Parameter	Symbol	Pin name	Conditions	Value			Unit	Remarks
				Min	Typ	Max		
Input frequency	1/ t_{CYLL}	X0A, X1A	-	-	32.768	-	kHz	When crystal oscillator is connected
			-	32	-	100	kHz	When using external clock
Input clock cycle	t_{CYLL}		-	10	-	31.25	µs	When using external clock
Input clock pulse width	-		P_{WH}/t_{CYLL}, P_{WL}/t_{CYLL}	45	-	55	%	When using external clock

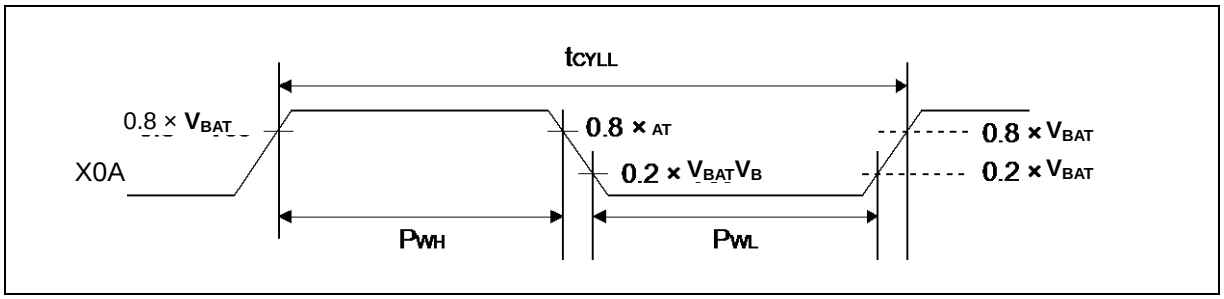

11.4.3 Built-in CR Oscillation Characteristics

■Built-in High-speed CR

(V_{CC} = 2.7V to 5.5V, V_{SS} = 0V)

Parameter	Symbol	Conditions	Value			Unit	Remarks
			Min	Typ	Max		
Clock frequency	F_{CRH}	Tj = -20°C to + 105°C	3.92	4	4.08	MHz	When trimming*
		Tj = - 40°C to + 125°C	3.88	4	4.12		
Clock frequency	F_{CRH}	Tj = - 40°C to + 125°C	3	4	5		When not trimming

*: In the case of using the values in CR trimming area of Flash memory at shipment for frequency/temperature trimming.

■Built-in Low-speed CR

(V_{CC} = 2.7V to 5.5V, V_{SS} = 0V)

Parameter	Symbol	Condition	Value			Unit	Remarks
			Min	Typ	Max		
Clock frequency	F_{CRL}	-	50	100	150	kHz	

11.4.4 Operating Conditions of Main PLL (In the case of using main clock for input clock of PLL)

(V_{CC} = 2.7V to 5.5V, V_{SS} = 0V)

Parameter	Symbol	Value			Unit	Remarks
		Min	Typ	Max		
PLL oscillation stabilization wait time*1 (LOCK UP time)	t_{LOCK}	200	-	-	µs	
PLL input clock frequency	F_{PLLI}	4	-	16	MHz	
PLL multiplication rate	-	13	-	80	multiplier	
PLL macro oscillation clock frequency	F_{PLLO}	200	-	320	MHz	
Main PLL clock frequency*2	F_{CLKPLL}	-	-	160	MHz	

*1: Time from when the PLL starts operating until the oscillation stabilizes.

*2: For more information about Main PLL clock (CLKPLL), see "Chapter: Clock" in "FM4 Family Peripheral Manual".

11.4.5 Operating Conditions of Main PLL (In the case of using built-in high-speed CR clock for input clock of main PLL)

(V_{CC} = 2.7V to 5.5V, V_{SS} = 0V)

Parameter	Symbol	Value			Unit	Remarks
		Min	Typ	Max		
PLL oscillation stabilization wait time*1 (LOCK UP time)	t_{LOCK}	200	-	-	µs	
PLL input clock frequency	F_{PLLI}	3.8	4	4.2	MHz	
PLL multiplication rate	-	50	-	75	multiplier	
PLL macro oscillation clock frequency	F_{PLLO}	190	-	320	MHz	
Main PLL clock frequency*2	F_{CLKPLL}	-	-	160	MHz	

*1: Time from when the PLL starts operating until the oscillation stabilizes.

*2: For more information about Main PLL clock (CLKPLL), see "Chapter: Clock" in "FM4 Family Peripheral Manual ".

Note: Make sure to input to the main PLL source clock, the high-speed CR clock (CLKHC) that the frequency and temperature has been trimmed.

11.4.6 Reset Input Characteristics

(V_{CC} = 2.7V to 5.5V, V_{SS} = 0V)

Parameter	Symbol	Pin name	Condition	Value		Unit	Remarks
				Min	Max		
Reset input time	t_{INITX}	INITX	-	500	-	ns	

11.4.7 Power-on Reset Timing

(V_{CC} = 2.7V to 5.5V, V_{SS} = 0V)

Parameter	Symbol	Pin name	Value		Unit	Remarks
			Min	Max		
Power supply rising time	Tr	VCC	0	-	ms	
Power supply shut down time	Toff		1	-	ms	
Time until releasing Power-on reset	Tprt		0.33	0.60	ms	

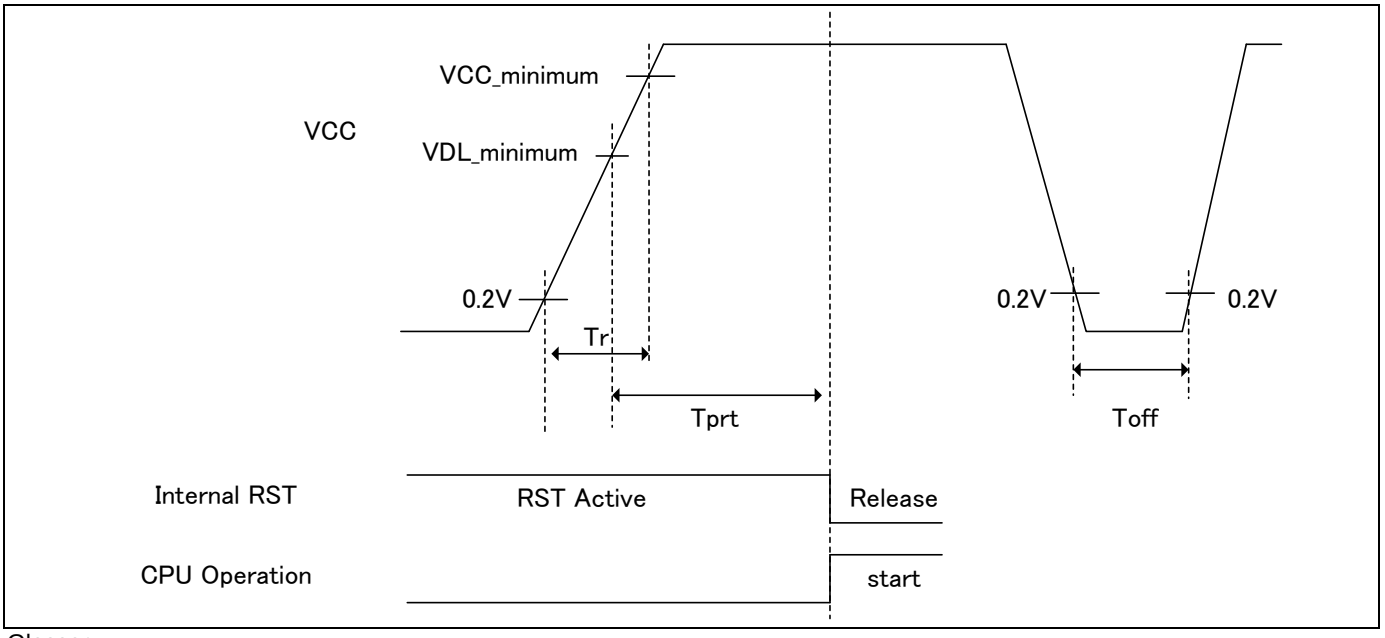

Glossary

- VCC_minimum: Minimum V_{CC} of recommended operating conditions.
- VDL_minimum : Minimum detection voltage of Low-Voltage detection reset.
  See "11.7. Low-Voltage Detection Characteristics".

11.4.8 GPIO Output Characteristics

(V_{CC} = 2.7V to 5.5V, V_{SS} = 0V)

Parameter	Symbol	Pin name	Conditions	Value		Unit
				Min	Max	
Output frequency	t_{PCYCLE}	Pxx*	$V_{CC} \geq 4.5$ V	-	50	MHz
			$V_{CC} < 4.5$ V	-	32	MHz

*: GPIO is a target.

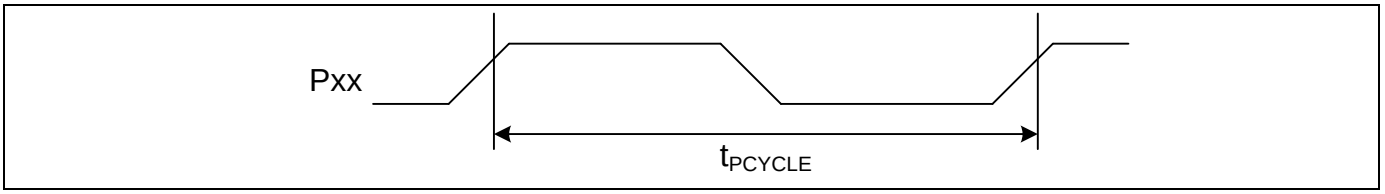

11.4.9 External Bus Timing

■External bus clock output characteristics

(V_{CC} = 2.7V to 5.5V, V_{SS} = 0V)

Parameter	Symbol	Pin name	Conditions	Value		Unit
				Min	Max	
Output frequency	t_{CYCLE}	MCLKOUT*1	$V_{CC} \geq 4.5$ V	-	50*2	MHz
			$V_{CC} < 4.5$ V	-	32*3	MHz

*1: The external bus clock (MCLKOUT) is a divided clock of HCLK.
For more information about setting of clock divider, see "Chapter: External Bus Interface" in “FM4 Family Peripheral Manual”.

*2: Generate MCLKOUT at setting more than 4 division when the AHB bus clock exceeds 100MHz.

*3: Generate MCLKOUT at setting more than 4 division when the AHB bus clock exceeds 64MHz.

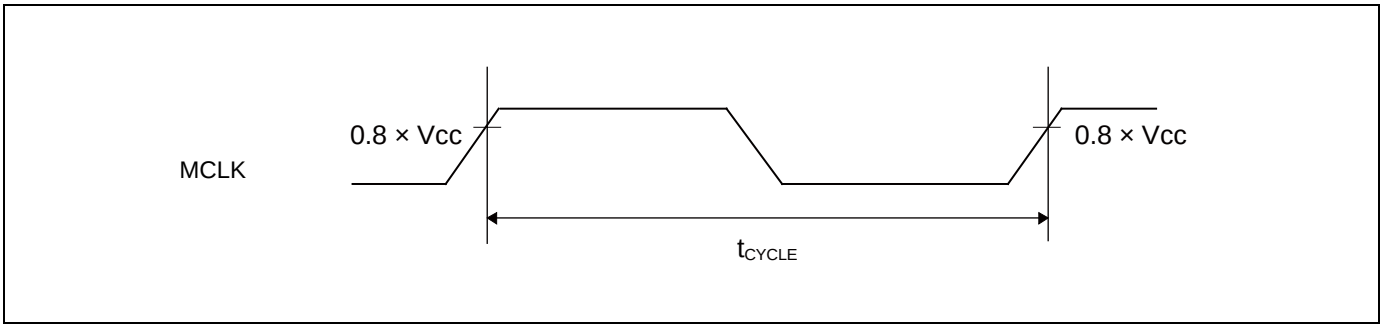

■External bus signal input/output characteristics

(V_{CC} = 2.7V to 5.5V, V_{SS} = 0V)

Parameter	Symbol	Conditions	Value	Unit	Remarks
Signal input characteristics	V_{IH}	-	0.8 × V_{CC}	V	
	V_{IL}		0.2 × V_{CC}	V	
Signal output characteristics	V_{OH}		0.8 × V_{CC}	V	
	V_{OL}		0.2 × V_{CC}	V	

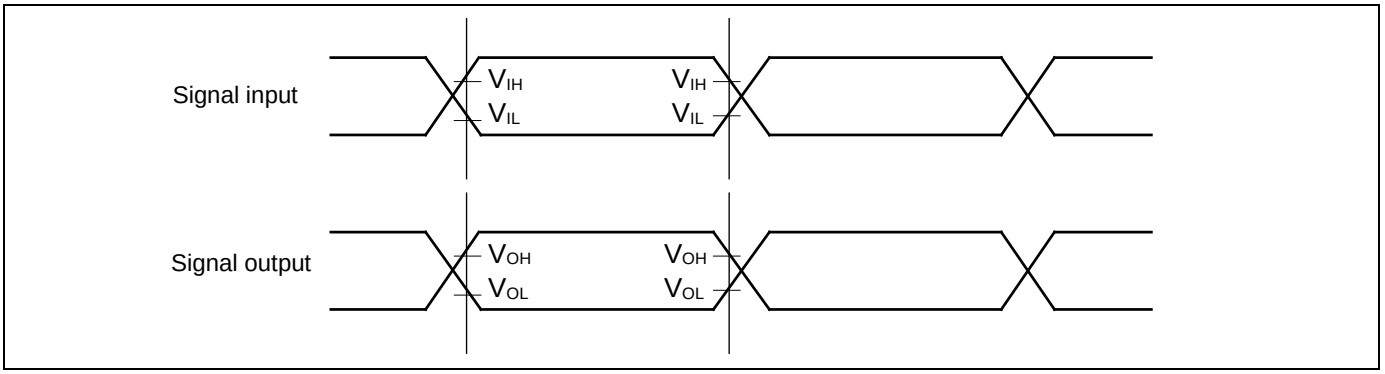

■Separate Bus Access Asynchronous SRAM Mode

(V_{CC} = 2.7V to 5.5V, V_{SS} = 0V)

Parameter	Symbol	Pin name	Conditions	Value		Unit
				Min	Max	
MOEX Mininum pulse width	t_{OEW}	MOEX	$V_{CC} \geq 4.5V$	MCLK×n-3	-	ns
			$V_{CC} < 4.5V$			
MCSX↓→Address output delay time	t_{CSL-AV}	MCSX[7:0], MAD[24:0]	$V_{CC} \geq 4.5V$	-9	+9	ns
			$V_{CC} < 4.5V$	-12	+12	
MOEX↑→Address hold time	t_{OEH-AX}	MOEX, MAD[24:0]	$V_{CC} \geq 4.5V$	0	MCLK×m+9	ns
			$V_{CC} < 4.5V$		MCLK×m+12	
MCSX↓→ MOEX↓ delay time	$t_{CSL-OEL}$	MOEX, MCSX[7:0]	$V_{CC} \geq 4.5V$	MCLK×m-9	MCLK×m+9	ns
			$V_{CC} < 4.5V$	MCLK×m-12	MCLK×m+12	
MOEX↑→ MCSX↑ time	$t_{OEH-CSH}$		$V_{CC} \geq 4.5V$	0	MCLK×m+9	ns
			$V_{CC} < 4.5V$		MCLK×m+12	
MCSX↓→MDQM↓ delay time	$t_{CSL-RDQML}$	MCSX, MDQM[1:0]	$V_{CC} \geq 4.5V$	MCLK×m-9	MCLK×m+9	ns
			$V_{CC} < 4.5V$	MCLK×m-12	MCLK×m+12	
Data set up→MOEX↑ time	t_{DS-OE}	MOEX, MADATA[15:0]	$V_{CC} \geq 4.5V$	20	-	ns
			$V_{CC} < 4.5V$	38	-	
MOEX↑→ Data hold time	t_{DH-OE}	MOEX, MADATA[15:0]	$V_{CC} \geq 4.5V$	0	-	ns
			$V_{CC} < 4.5V$			
MWEX Mininum pulse width	t_{WEW}	MWEX	$V_{CC} \geq 4.5V$	MCLK×n-3	-	ns
			$V_{CC} < 4.5V$			
MWEX↑→Address output delay time	t_{WEH-AX}	MWEX, MAD[24:0]	$V_{CC} \geq 4.5V$	0	MCLK×m+9	ns
			$V_{CC} < 4.5V$		MCLK×m+12	
MCSX↓→MWEX↓ delay time	$t_{CSL-WEL}$	MWEX, MCSX[7:0]	$V_{CC} \geq 4.5V$	MCLK×n-9	MCLK×n+9	ns
			$V_{CC} < 4.5V$	MCLK×n-12	MCLK×n+12	
MWEX↑→MCSX↑ delay time	$t_{WEH-CSH}$		$V_{CC} \geq 4.5V$	0	MCLK×m+9	ns
			$V_{CC} < 4.5V$		MCLK×m+12	
MCSX↓→MDQM↓ delay time	$t_{CSL-WDQML}$	MCSX, MDQM[1:0]	$V_{CC} \geq 4.5V$	MCLK×n-9	MCLK×n+9	ns
			$V_{CC} < 4.5V$	MCLK×n-12	MCLK×n+12	
MCSX↓→ Data output time	t_{CSL-DX}	MCSX, MADATA[15:0]	$V_{CC} \geq 4.5V$	MCLK-9	MCLK+9	ns
			$V_{CC} < 4.5V$	MCLK-12	MCLK+12	
MWEX↑→ Data hold time	t_{WEH-DX}	MWEX, MADATA[15:0]	$V_{CC} \geq 4.5V$	0	MCLK×m+9	ns
			$V_{CC} < 4.5V$		MCLK×m+12	

Note: When the external load capacitance C_L = 30pF (m=0 to 15, n=1 to 16)

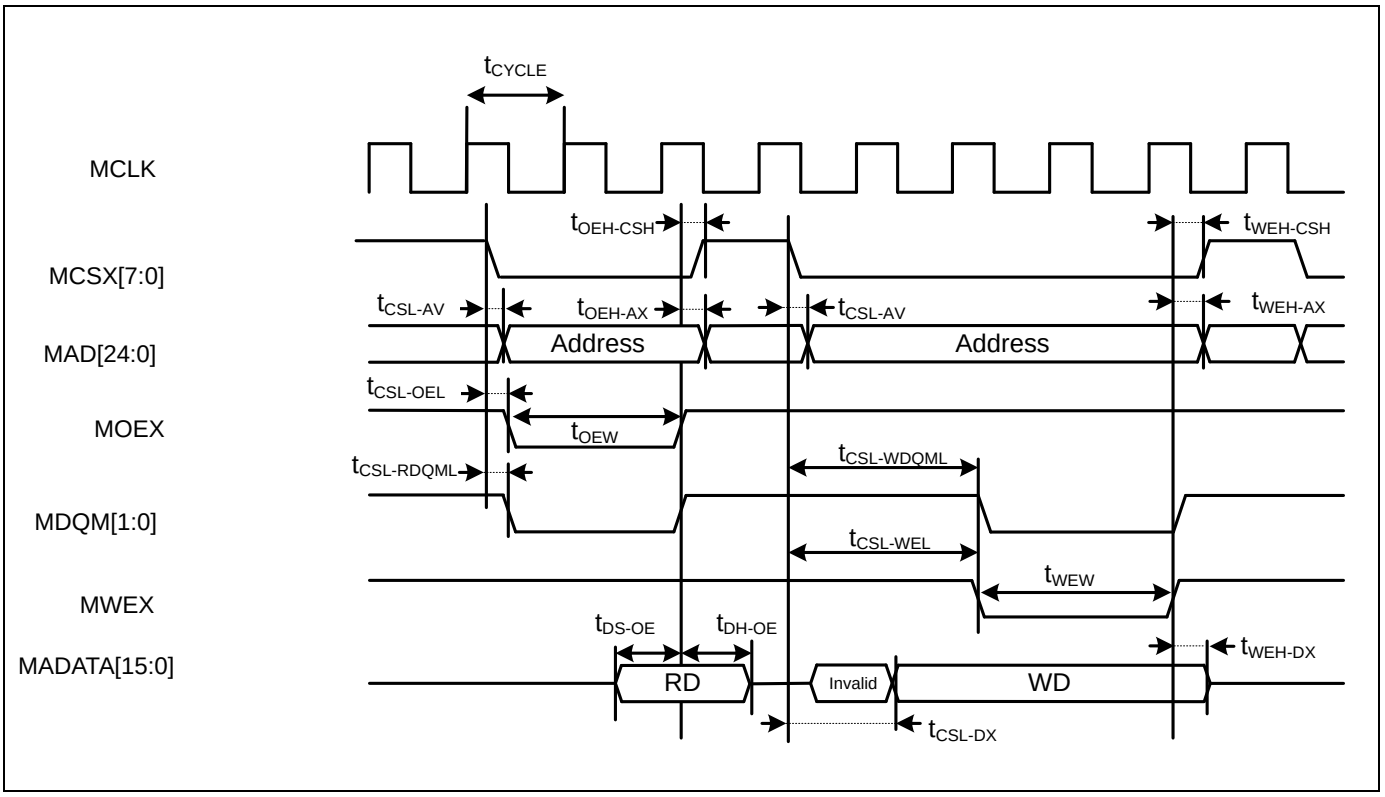
tCYCLE
MCLK
MCSX[7:0]
MAD[24:0]
MOEX
MDQM[1:0]
MWEX
MADATA[15:0]
tOEH-CSH
tWEH-CSH
tCSL-AV
tOEH-AX
tCSL-AV
tWEH-AX
Address
Address
tCSL-OEL
tOEW
tCSL-RDQML
tCSL-WDQML
tCSL-WEL
tWEW
tDS-OE
tDH-OE
tWEH-DX
RD
Invalid
WD
tCSL-DX

■Separate Bus Access Synchronous SRAM Mode

(V_{CC} = 2.7V to 5.5V, V_{SS} = 0V)

Parameter	Symbol	Pin name	Conditions	Value		Unit
				Min	Max	
Address delay time	t_{AV}	MCLK, MAD[24:0]	$V_{CC} \geq 4.5V$	1	9	ns
			$V_{CC} < 4.5V$		12	
MCSX delay time	t_{CSL}	MCLK, MCSX[7:0]	$V_{CC} \geq 4.5V$	1	9	ns
			$V_{CC} < 4.5V$		12	
	t_{CSH}		$V_{CC} \geq 4.5V$	1	9	ns
			$V_{CC} < 4.5V$		12	
MOEX delay time	t_{REL}	MCLK, MOEX	$V_{CC} \geq 4.5V$	1	9	ns
			$V_{CC} < 4.5V$		12	
	t_{REH}		$V_{CC} \geq 4.5V$	1	9	ns
			$V_{CC} < 4.5V$		12	
Data set up →MCLK↑ time	t_{DS}	MCLK, MADATA[15:0]	$V_{CC} \geq 4.5V$	19	-	ns
			$V_{CC} < 4.5V$	37		
MCLK↑→ Data hold time	t_{DH}	MCLK, MADATA[15:0]	$V_{CC} \geq 4.5V$	0	-	ns
			$V_{CC} < 4.5V$			
MWEX delay time	t_{WEL}	MCLK, MWEX	$V_{CC} \geq 4.5V$	1	9	ns
			$V_{CC} < 4.5V$		12	
	t_{WEH}		$V_{CC} \geq 4.5V$	1	9	ns
			$V_{CC} < 4.5V$		12	
MDQM[1:0] delay time	t_{DQML}	MCLK, MDQM[1:0]	$V_{CC} \geq 4.5V$	1	9	ns
			$V_{CC} < 4.5V$		12	
	t_{DQMH}		$V_{CC} \geq 4.5V$	1	9	ns
			$V_{CC} < 4.5V$		12	
MCLK↑→ Data output time	t_{ODS}	MCLK, MADATA[15:0]	$V_{CC} \geq 4.5V$	MCLK+1	MCLK+18	ns
			$V_{CC} < 4.5V$		MCLK+24	
MCLK↑→ Data hold time	t_{OD}	MCLK, MADATA[15:0]	$V_{CC} \geq 4.5V$	1	18	ns
			$V_{CC} < 4.5V$		24	

Note: When the external load capacitance C_L = 30pF

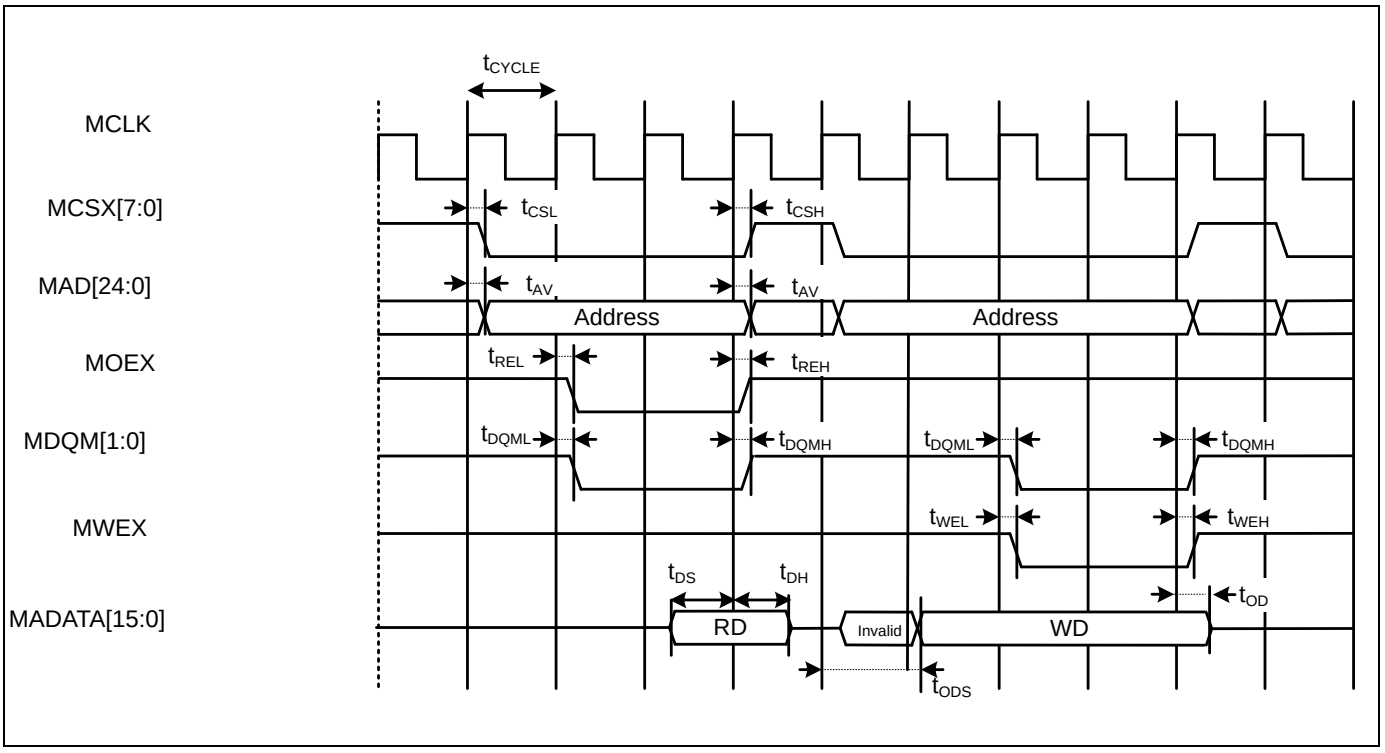
tCYCLE
MCLK
MCSX[7:0]
tCSL
tCSH
MAD[24:0]
tAV
tAV
Address
Address
MOEX
tREL
tREH
MDQM[1:0]
tDQML
tDQMH
tDQML
tDQMH
MWEX
tWEL
tWEH
tDS
tDH
tOD
MADATA[15:0]
RD
Invalid
WD
tODS

■Multiplexed Bus Access Asynchronous SRAM Mode

(V_{CC} = 2.7V to 5.5V, V_{SS} = 0V)

Parameter	Symbol	Pin name	Conditions	Value		Unit
				Min	Max	
Multiplexed address delay time	$t_{ALE-CHMADV}$	MALE, MADATA[15:0]	$V_{CC} \geq 4.5V$	0	10	ns
			$V_{CC} < 4.5V$		20	
Multiplexed address hold time	t_{CHMADH}		$V_{CC} \geq 4.5V$	MCLK×n+0	MCLK×n+10	ns
			$V_{CC} < 4.5V$	MCLK×n+0	MCLK×n+20	

Note: When the external load capacitance C_L = 30pF (m=0 to 15, n=1 to 16)

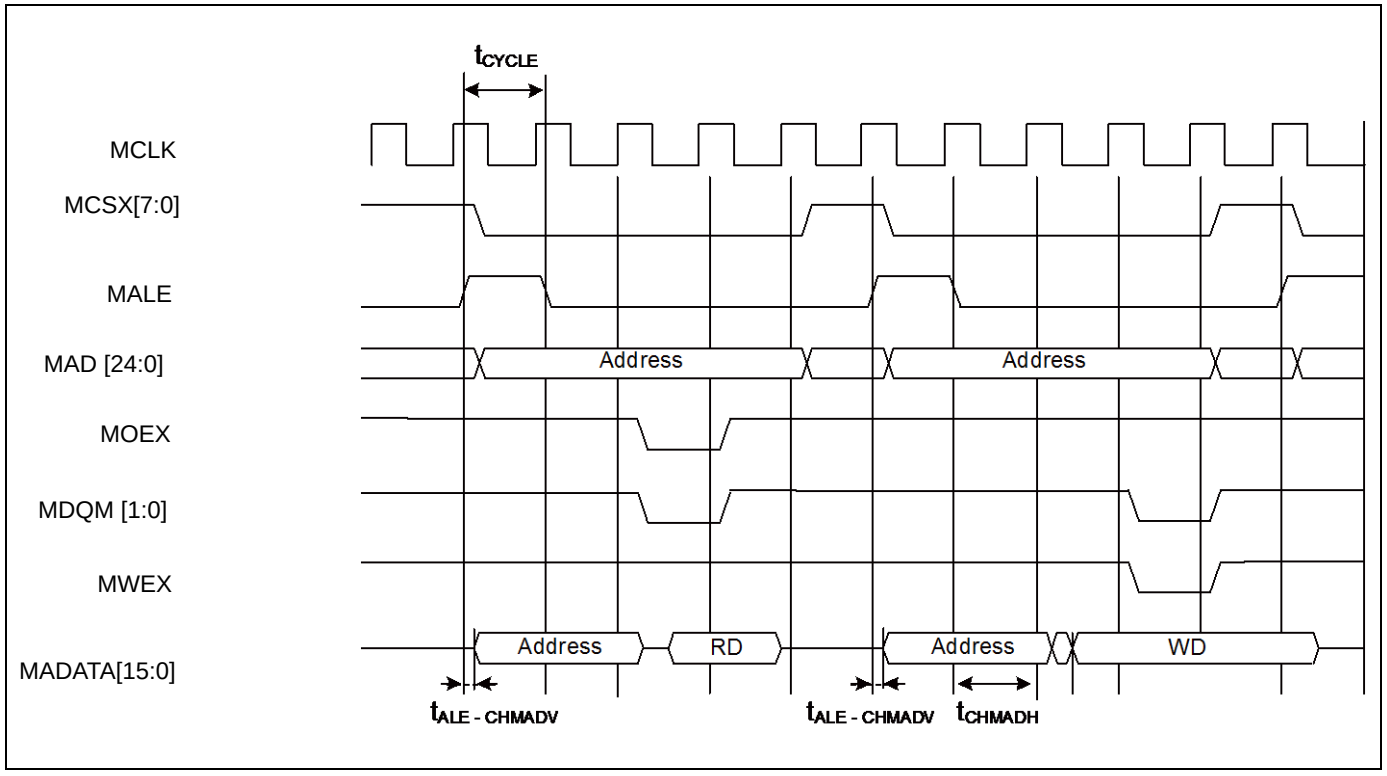

■Multiplexed Bus Access Synchronous SRAM Mode

(V_{CC} = 2.7V to 5.5V, V_{SS} = 0V)

Parameter	Symbol	Pin name	Conditions	Value		Unit	Remarks
				Min	Max		
MALE delay time	t_{CHAL}	MCLK, ALE	$V_{CC} \geq 4.5V$	1	9	ns	
			$V_{CC} < 4.5V$		12	ns	
	t_{CHAH}		$V_{CC} \geq 4.5V$	1	9	ns	
			$V_{CC} < 4.5V$		12	ns	
MCLK↑→ Multiplexed address delay time	t_{CHMADV}	MCLK, MADATA[15:0]	$V_{CC} \geq 4.5V$	1	t_{OD}	ns	
			$V_{CC} < 4.5V$				
MCLK↑→ Multiplexed data output time	t_{CHMADX}		$V_{CC} \geq 4.5V$	1	t_{OD}	ns	
			$V_{CC} < 4.5V$				

Note: When the external load capacitance C_L = 30pF

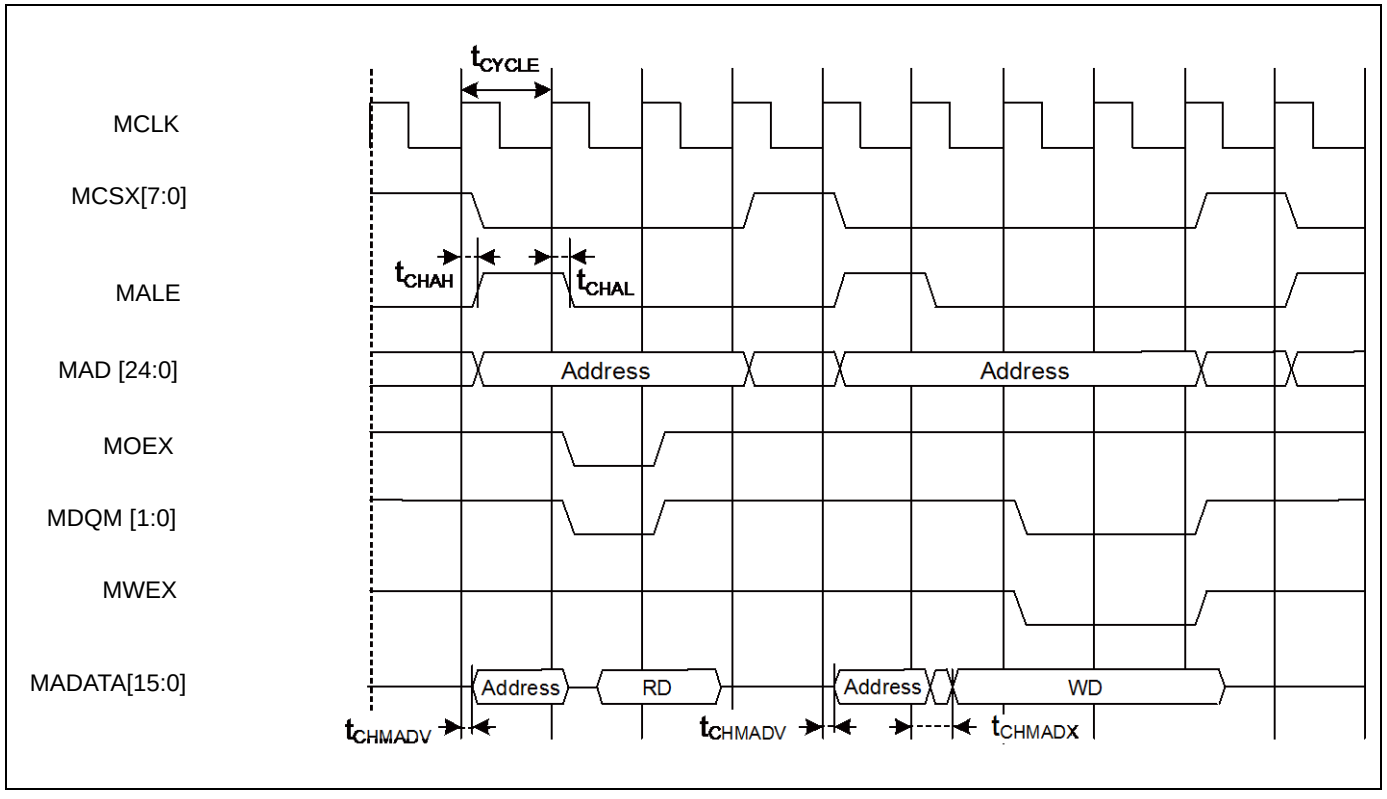

■NAND Flash Mode

(V_{CC} = 2.7V to 5.5V, V_{SS} = 0V)

Parameter	Symbol	Pin name	Conditions	Value		Unit
				Min	Max	
MNREX Min pulse width	t_{NREW}	MNREX	$V_{CC} \geq 4.5V$	MCLK×n-3	-	ns
			$V_{CC} < 4.5V$			
Data set up →MNREX↑ time	t_{DS-NRE}	MNREX, MADATA[15:0]	$V_{CC} \geq 4.5V$	20	-	ns
			$V_{CC} < 4.5V$	38	-	
MNREX↑→ Data hold time	t_{DH-NRE}	MNREX, MADATA[15:0]	$V_{CC} \geq 4.5V$	0	-	ns
			$V_{CC} < 4.5V$			
MNALE↑→ MNWEX delay time	$t_{ALEH-NWEL}$	MNALE, MNWEX	$V_{CC} \geq 4.5V$	MCLK×m-9	MCLK×m+9	ns
			$V_{CC} < 4.5V$	MCLK×m-12	MCLK×m+12	
MNALE↓→ MNWEX delay time	$t_{ALEL-NWEL}$	MNALE, MNWEX	$V_{CC} \geq 4.5V$	MCLK×m-9	MCLK×m+9	ns
			$V_{CC} < 4.5V$	MCLK×m-12	MCLK×m+12	
MNCLE↑→ MNWEX delay time	$t_{CLEH-NWEL}$	MNCLE, MNWEX	$V_{CC} \geq 4.5V$	MCLK×m-9	MCLK×m+9	ns
			$V_{CC} < 4.5V$	MCLK×m-12	MCLK×m+12	
MNWEX↑→ MNCLE delay time	$t_{NWEH-CLEL}$	MNCLE, MNWEX	$V_{CC} \geq 4.5V$	0	MCLK×m+9	ns
			$V_{CC} < 4.5V$		MCLK×m+12	
MNWEX Min pulse width	t_{NWEW}	MNWEX	$V_{CC} \geq 4.5V$	MCLK×n-3	-	ns
			$V_{CC} < 4.5V$			
MNWEX↓→ Data output time	$t_{NWEL-DV}$	MNWEX, MADATA[15:0]	$V_{CC} \geq 4.5V$	- 9	+ 9	ns
			$V_{CC} < 4.5V$	-12	+12	
MNWEX↑→ Data hold time	$t_{NWEH-DX}$	MNWEX, MADATA[15:0]	$V_{CC} \geq 4.5V$	0	MCLK×m+9	ns
			$V_{CC} < 4.5V$		MCLK×m+12	

Note: When the external load capacitance C_L = 30pF (m=0 to 15, n=1 to 16)

NAND Flash Read

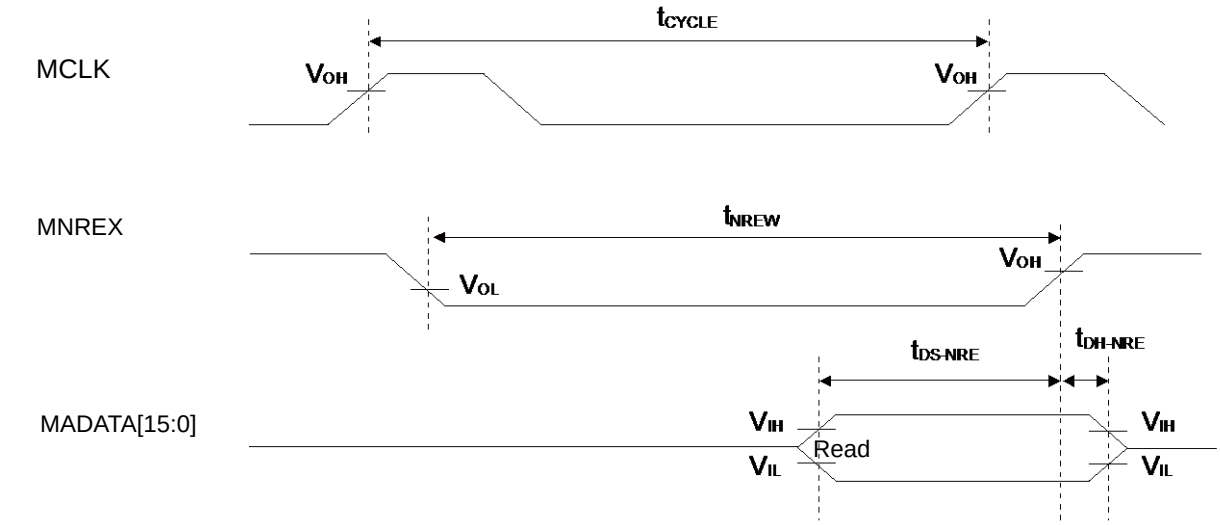

NAND Flash Address Write

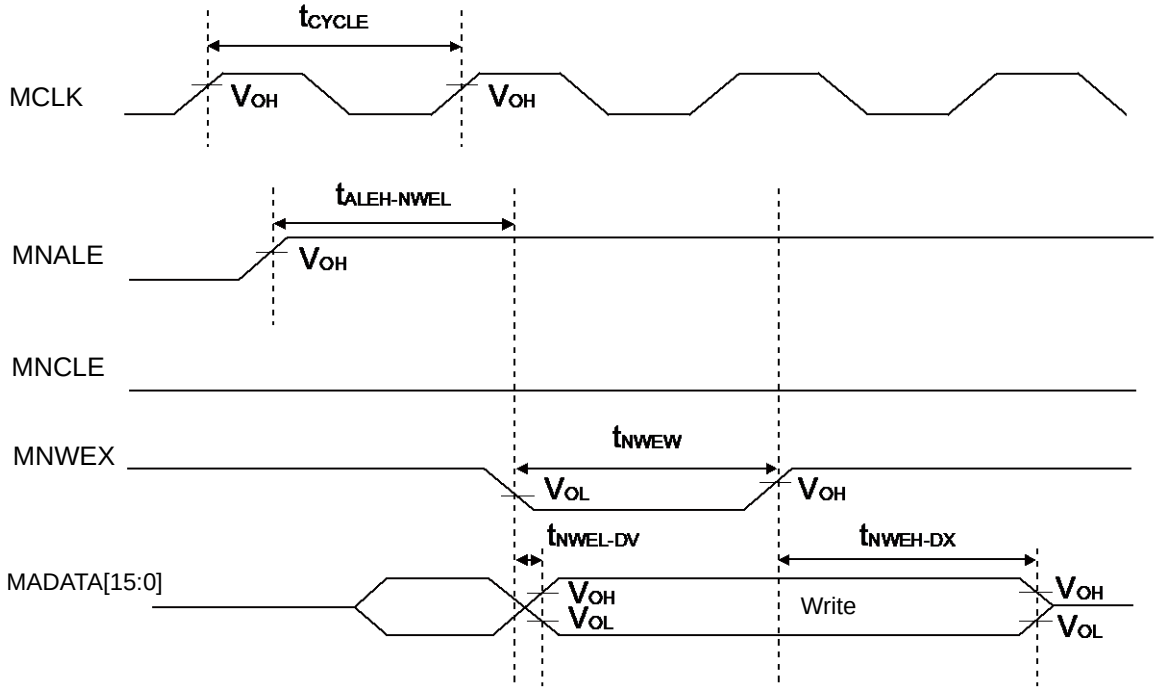

NAND Flash Command Write

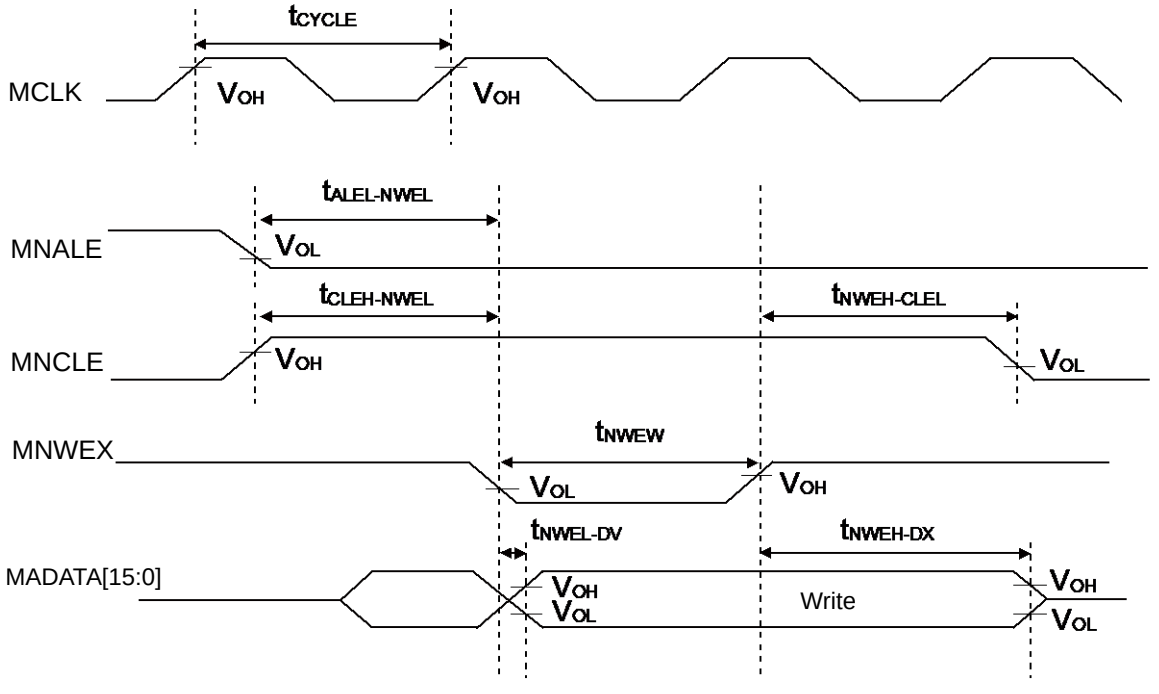

■External Ready Input Timing

(V_{CC} = 2.7V to 5.5V, V_{SS} = 0V)

Parameter	Symbol	Pin name	Conditions	Value		Unit	Remarks
				Min	Max		
MCLK↑ MRDY input setup time	t_{RDYI}	MCLK, MRDY	$V_{CC} \geq 4.5V$	19	-	ns	
			$V_{CC} < 4.5V$	37			

When RDY is input

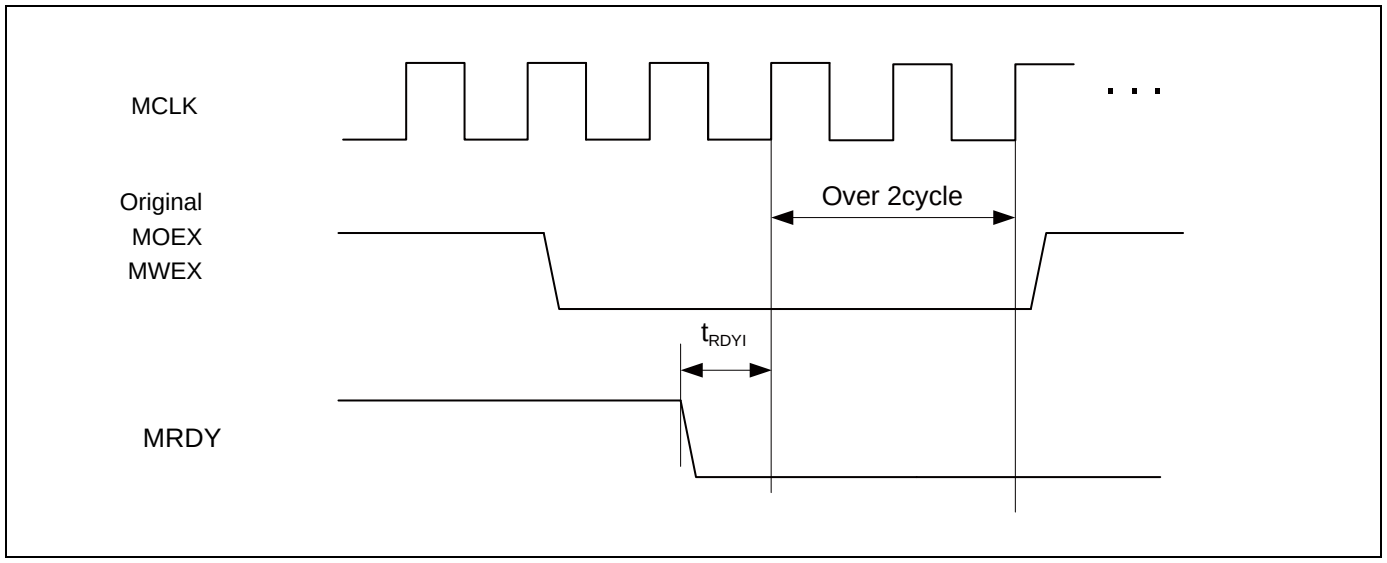

When RDY is released

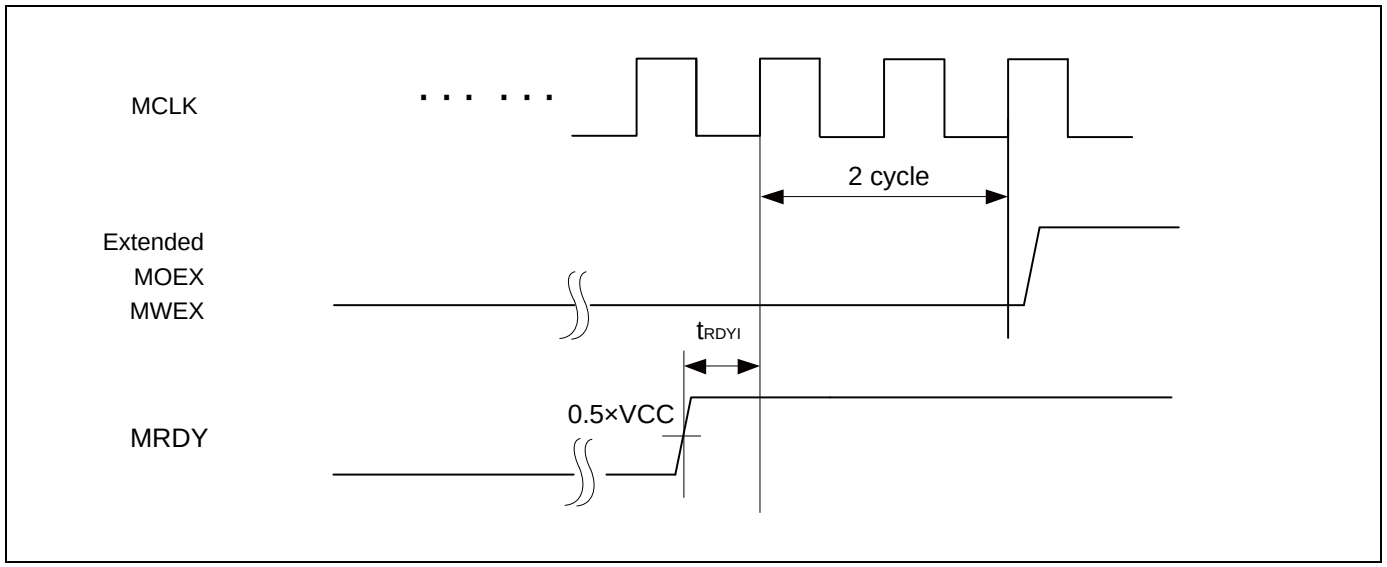

■SDRAM Mode

(V_{CC} = 2.7V to 3.6V, V_{SS} = 0V)

Parameter	Symbol	Pin name	Value		Unit
			Min	Max	
Output frequency	t_{CYCSD}	MSDCLK	-	32	MHz
Address delay time	t_{AOSD}	MSDCLK, MAD[15:0]	2	12	ns
MSDCLK↑→Data output delay time	t_{DOSD}	MSDCLK, MADATA[31:0]	2	12	ns
MSDCLK↑→Data output Hi-Z time	t_{DOZSD}	MSDCLK, MADATA[31:0]	2	20	ns
MDQM[1:0] delay time	t_{WROSD}	MSDCLK, MDQM[1:0]	1	12	ns
MCSX delay time	t_{MCSSD}	MSDCLK, MCSX8	2	12	ns
MRASX delay time	t_{RASSD}	MSDCLK, MRASX	2	12	ns
MCASX delay time	t_{CASSD}	MSDCLK, MCASX	2	12	ns
MSDWEX delay time	t_{MWESD}	MSDCLK, MSDWEX	2	12	ns
MSDCKE delay time	t_{CKESD}	MSDCLK, MSDCKE	2	12	ns
Data set up time	t_{DSSD}	MSDCLK, MADATA[31:0]	23	-	ns
Data hold time	t_{DHSD}	MSDCLK, MADATA[31:0]	0	-	ns

Note: When the external load capacitance C_L = 30pF

SDRAM Access

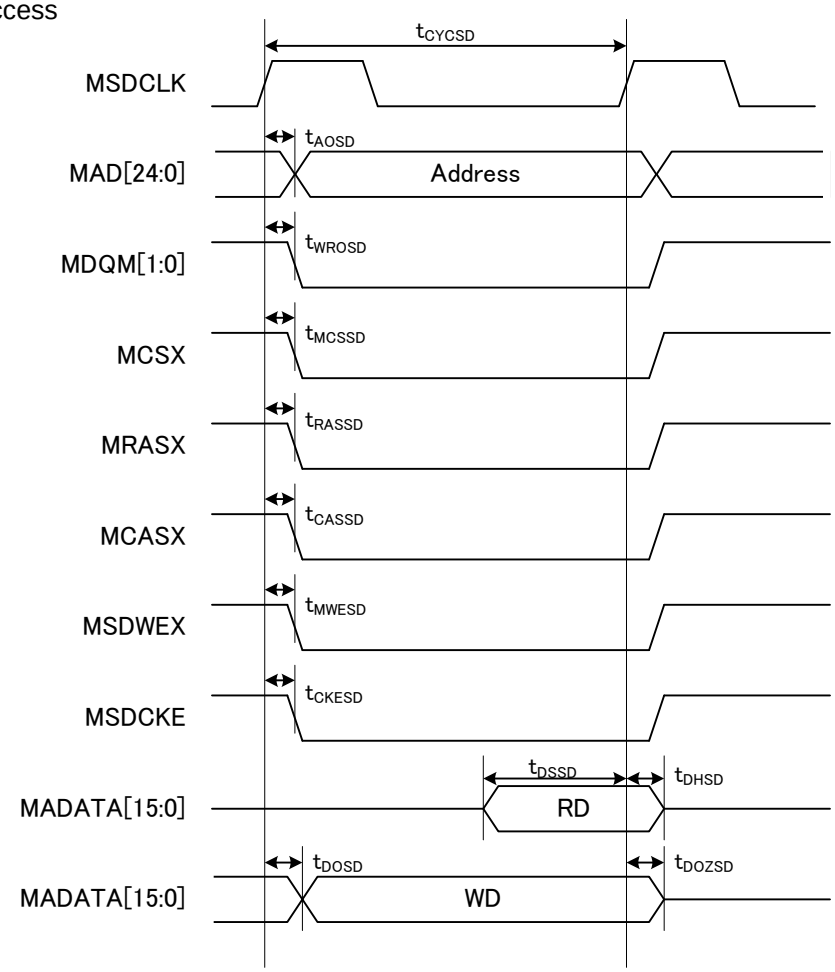

11.4.10 Base Timer Input Timing

■Timer input timing

(V_{CC} = 2.7V to 5.5V, V_{SS} = 0V)

Parameter	Symbol	Pin name	Conditions	Value		Unit	Remarks
				Min	Max		
Input pulse width	t_{TIWH}, t_{TIWL}	TIOAn/TIOBn (when using as ECK, TIN)	-	$2t_{CYCP}$	-	ns	

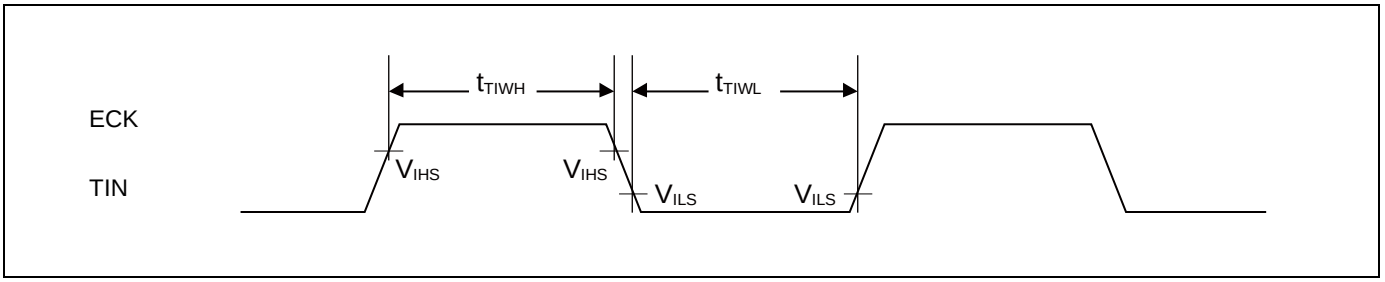

■Trigger input timing

(V_{CC} = 2.7V to 5.5V, V_{SS} = 0V)

Parameter	Symbol	Pin name	Conditions	Value		Unit	Remarks
				Min	Max		
Input pulse width	t_{TRGH}, t_{TRGL}	TIOAn/TIOBn (when using as TGIN)	-	$2t_{CYCP}$	-	ns	

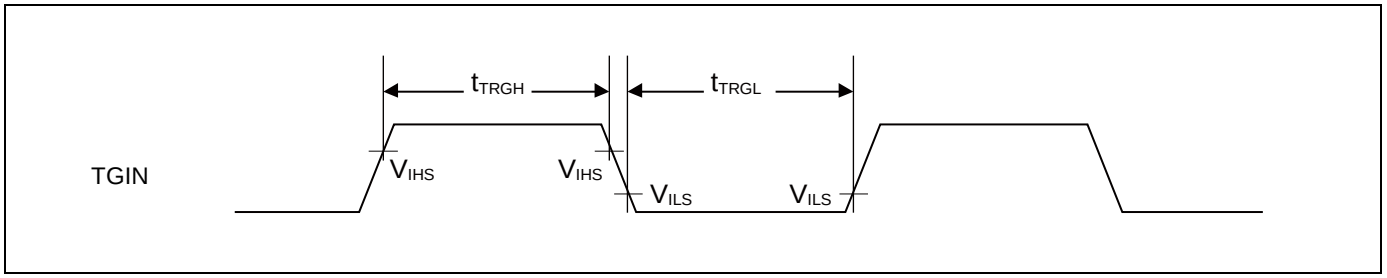

Note: t_{CYCP} indicates the APB bus clock cycle time.
About the APB bus number which the Base Timer is connected to, see "Block Diagram" in this data sheet.

11.4.11 UART Timing

■Synchronous serial (SPI = 0, SCINV = 0)

(V_{CC} = 2.7V to 5.5V, V_{SS} = 0V)

Parameter	Symbol	Pin name	Conditions	V_{CC} < 4.5V		V_{CC} ≥ 4.5V		Unit
				Min	Max	Min	Max	
Serial clock cycle time	t_{SCYC}	SCKx	Internal shift clock operation	$4t_{CYCP}$	-	$4t_{CYCP}$	-	ns
SCK↓→SOT delay time	t_{SLOVI}	SCKx, SOTx		- 30	+ 30	- 20	+ 20	ns
SIN→SCK↑ setup time	t_{IVSHI}	SCKx, SINx		50	-	30	-	ns
SCK↑→SIN hold time	t_{SHIXI}	SCKx, SINx		0	-	0	-	ns
Serial clock "L" pulse width	t_{SLSH}	SCKx	External shift clock operation	$2t_{CYCP}$ - 10	-	$2t_{CYCP}$ - 10	-	ns
Serial clock "H" pulse width	t_{SHSL}	SCKx		t_{CYCP} + 10	-	t_{CYCP} + 10	-	ns
SCK↓→SOT delay time	t_{SLOVE}	SCKx, SOTx		-	50	-	30	ns
SIN→SCK↑ setup time	t_{IVSHE}	SCKx, SINx		10	-	10	-	ns
SCK↑→SIN hold time	t_{SHIXE}	SCKx, SINx		20	-	20	-	ns
SCK falling time	tF	SCKx		-	5	-	5	ns
SCK rising time	tR	SCKx		-	5	-	5	ns

Notes:

- The above characteristics apply to CLK synchronous mode.
- t_{CYCP} indicates the APB bus clock cycle time.
  About the APB bus number which UART is connected to, see "Block Diagram" in this datasheet.
- These characteristics only guarantee the same relocate port number.
  For example, the combination of SCLKx_0 and SOTx_1 is not guaranteed.
- When the external load capacitance C_L = 30pF.

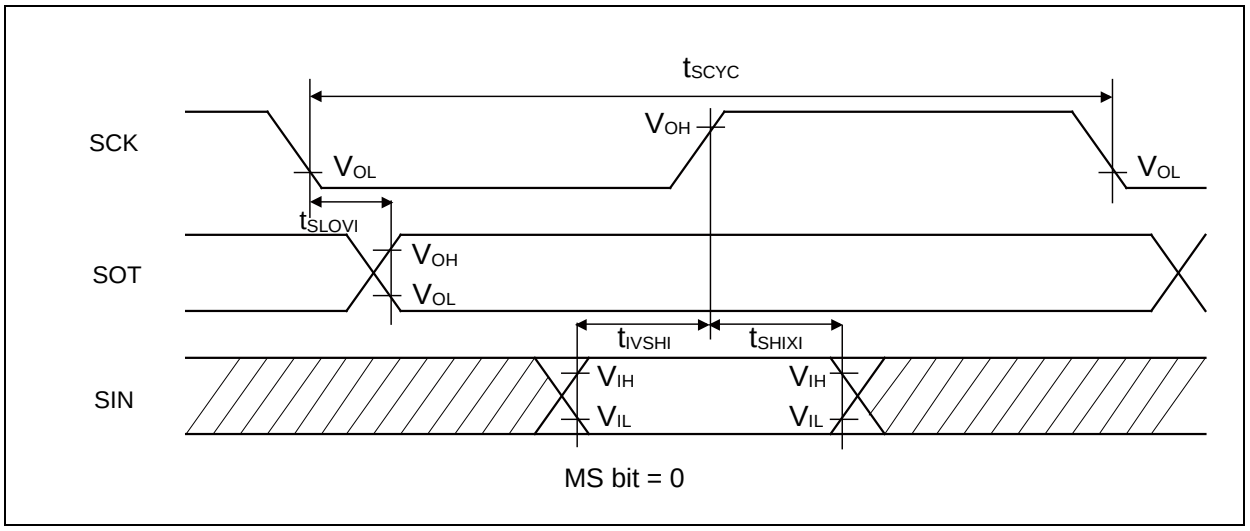

MS bit = 0

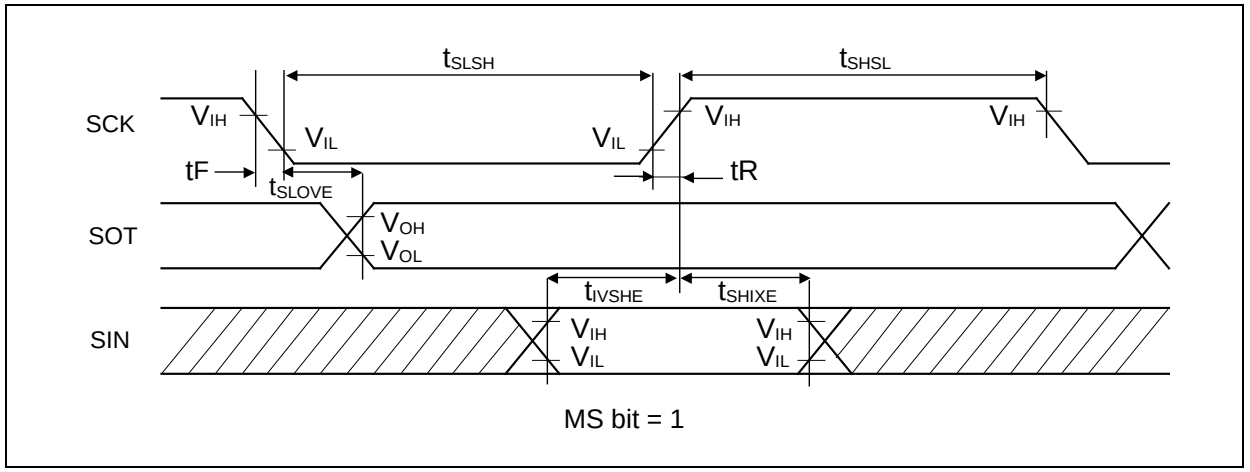

MS bit = 1

■Synchronous serial (SPI = 0, SCINV = 1)

(V_{CC} = 2.7V to 5.5V, V_{SS} = 0V)

Parameter	Symbol	Pin name	Conditions	V_{CC} < 4.5V		V_{CC} ≥ 4.5V		Unit
				Min	Max	Min	Max	
Serial clock cycle time	t_{SCYC}	SCKx	Internal shift clock operation	$4t_{CYCP}$	-	$4t_{CYCP}$	-	ns
SCK↑→SOT delay time	t_{SHOVI}	SCKx, SOTx		- 30	+ 30	- 20	+ 20	ns
SIN→SCK↓ setup time	t_{IVSLI}	SCKx, SINx		50	-	30	-	ns
SCK↓→SIN hold time	t_{SLIXI}	SCKx, SINx		0	-	0	-	ns
Serial clock "L" pulse width	t_{SLSH}	SCKx	External shift clock operation	$2t_{CYCP}$ - 10	-	$2t_{CYCP}$ - 10	-	ns
Serial clock "H" pulse width	t_{SHSL}	SCKx		t_{CYCP} + 10	-	t_{CYCP} + 10	-	ns
SCK↑→SOT delay time	t_{SHOVE}	SCKx, SOTx		-	50	-	30	ns
SIN→SCK↓ setup time	t_{IVSLE}	SCKx, SINx		10	-	10	-	ns
SCK↓→SIN hold time	t_{SLIXE}	SCKx, SINx		20	-	20	-	ns
SCK falling time	tF	SCKx		-	5	-	5	ns
SCK rising time	tR	SCKx		-	5	-	5	ns

Notes:

- The above characteristics apply to CLK synchronous mode.
- t_{CYCP} indicates the APB bus clock cycle time.
  About the APB bus number which UART is connected to, see "Block Diagram" in this datasheet.
- These characteristics only guarantee the same relocate port number.
  For example, the combination of SCLKx_0 and SOTx_1 is not guaranteed.
- When the external load capacitance C_L = 30pF.

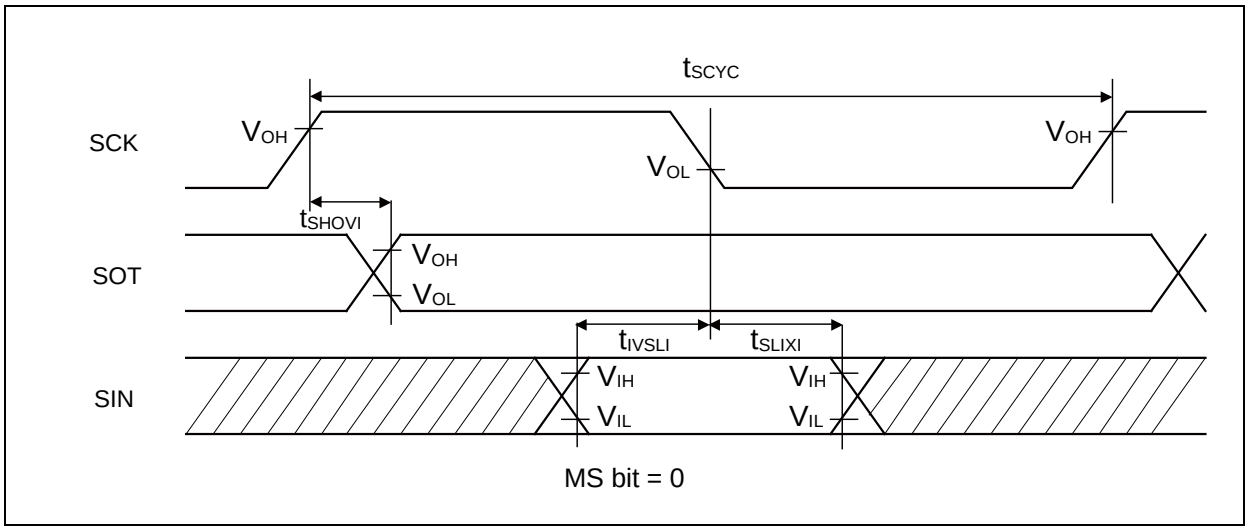

MS bit = 0

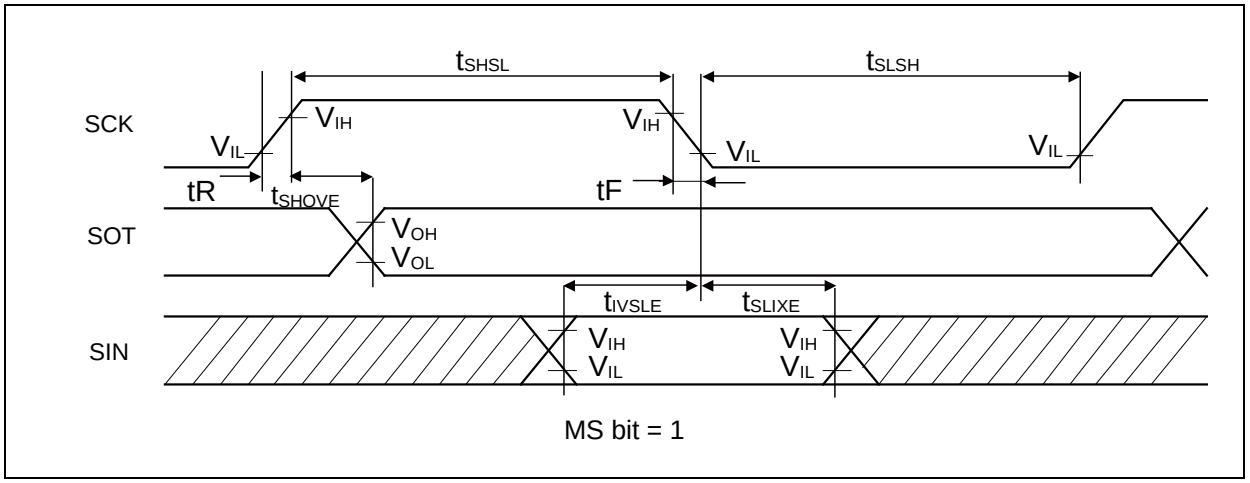

MS bit = 1

■Synchronous serial (SPI = 1, SCINV = 0)

(V_{CC} = 2.7V to 5.5V, V_{SS} = 0V)

Parameter	Symbol	Pin name	Conditions	V_{CC} < 4.5V		V_{CC} ≥ 4.5V		Unit
				Min	Max	Min	Max	
Serial clock cycle time	t_{SCYC}	SCKx	Internal shift clock operation	$4t_{CYCP}$	-	$4t_{CYCP}$	-	ns
SCK↑→SOT delay time	t_{SHOVI}	SCKx, SOTx		- 30	+ 30	- 20	+ 20	ns
SIN→SCK↓ setup time	t_{IVSLI}	SCKx, SINx		50	-	30	-	ns
SCK↓→SIN hold time	t_{SLIXI}	SCKx, SINx		0	-	0	-	ns
SOT→SCK↓ delay time	t_{SOVLI}	SCKx, SOTx		$2t_{CYCP}$ - 30	-	$2t_{CYCP}$ - 30	-	ns
Serial clock "L" pulse width	t_{SLSH}	SCKx	External shift clock operation	$2t_{CYCP}$ - 10	-	$2t_{CYCP}$ - 10	-	ns
Serial clock "H" pulse width	t_{SHSL}	SCKx		t_{CYCP} + 10	-	t_{CYCP} + 10	-	ns
SCK↑→SOT delay time	t_{SHOVE}	SCKx, SOTx		-	50	-	30	ns
SIN→SCK↓ setup time	t_{IVSLE}	SCKx, SINx		10	-	10	-	ns
SCK↓→SIN hold time	t_{SLIXE}	SCKx, SINx		20	-	20	-	ns
SCK falling time	tF	SCKx		-	5	-	5	ns
SCK rising time	tR	SCKx		-	5	-	5	ns

Notes:

- The above characteristics apply to CLK synchronous mode.
- t_{CYCP} indicates the APB bus clock cycle time.
  About the APB bus number which UART is connected to, see "Block Diagram" in this datasheet.
- These characteristics only guarantee the same relocate port number.
  For example, the combination of SCLKx_0 and SOTx_1 is not guaranteed.
- When the external load capacitance C_L = 30pF.

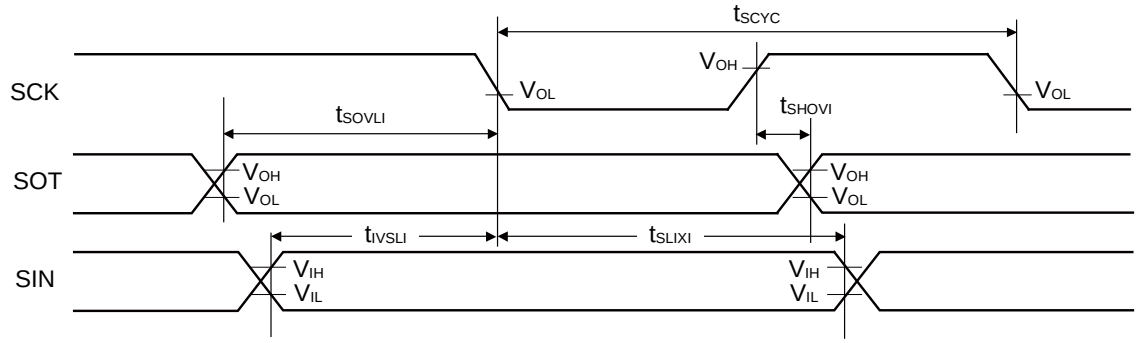

MS bit = 0

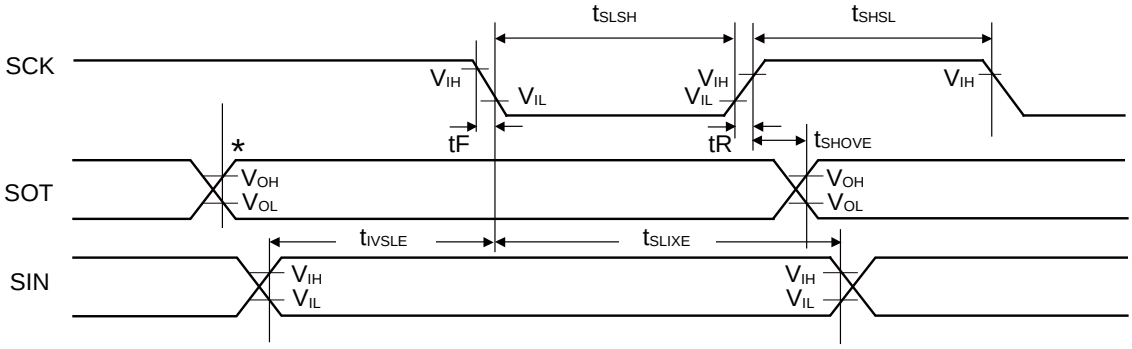

MS bit = 1

*: Changes when writing to TDR register

■Synchronous serial (SPI = 1, SCINV = 1)

(V_{CC} = 2.7V to 5.5V, V_{SS} = 0V)

Parameter	Symbol	Pin name	Conditions	V_{CC} < 4.5V		V_{CC} ≥ 4.5V		Unit
				Min	Max	Min	Max	
Serial clock cycle time	t_{SCYC}	SCKx	Internal shift clock operation	$4t_{CYCP}$	-	$4t_{CYCP}$	-	ns
SCK↓→SOT delay time	t_{SLOVI}	SCKx, SOTx		- 30	+ 30	- 20	+ 20	ns
SIN→SCK↑ setup time	t_{IVSHI}	SCKx, SINx		50	-	30	-	ns
SCK↑→SIN hold time	t_{SHIXI}	SCKx, SINx		0	-	0	-	ns
SOT→SCK↑ delay time	t_{SOVHI}	SCKx, SOTx		$2t_{CYCP}$ - 30	-	$2t_{CYCP}$ - 30	-	ns
Serial clock "L" pulse width	t_{SLSH}	SCKx	External shift clock operation	$2t_{CYCP}$ - 10	-	$2t_{CYCP}$ - 10	-	ns
Serial clock "H" pulse width	t_{SHSL}	SCKx		t_{CYCP} + 10	-	t_{CYCP} + 10	-	ns
SCK↓→SOT delay time	t_{SLOVE}	SCKx, SOTx		-	50	-	30	ns
SIN→SCK↑ setup time	t_{IVSHE}	SCKx, SINx		10	-	10	-	ns
SCK↑→SIN hold time	t_{SHIXE}	SCKx, SINx		20	-	20	-	ns
SCK falling time	tF	SCKx		-	5	-	5	ns
SCK rising time	tR	SCKx		-	5	-	5	ns

Notes:

- The above characteristics apply to CLK synchronous mode.
- t_{CYCP} indicates the APB bus clock cycle time.
  About the APB bus number which UART is connected to, see "Block Diagram" in this datasheet.
- These characteristics only guarantee the same relocate port number.
  For example, the combination of SCLKx_0 and SOTx_1 is not guaranteed.
- When the external load capacitance C_L = 30pF.

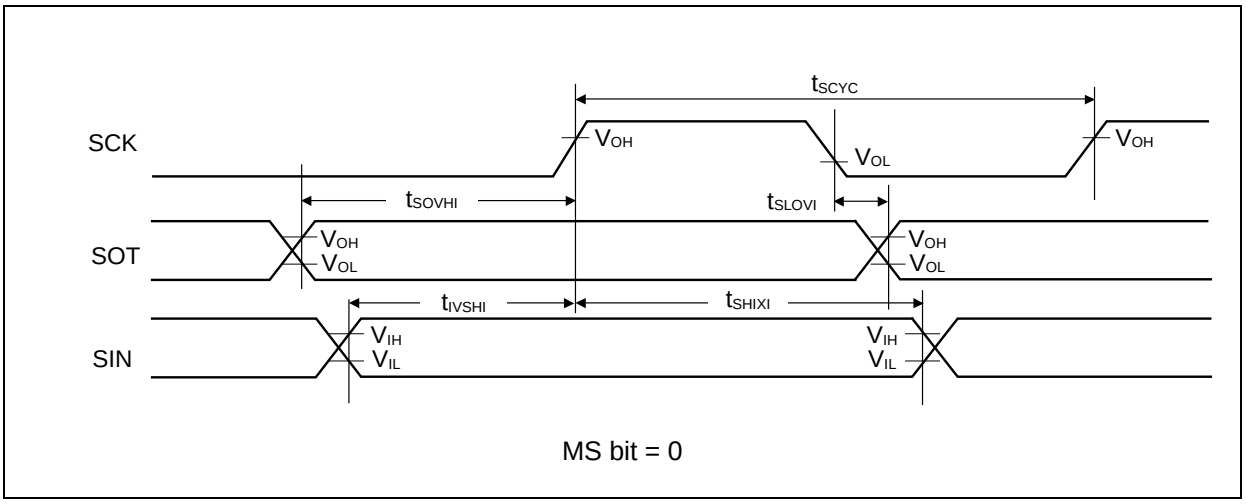

MS bit = 0

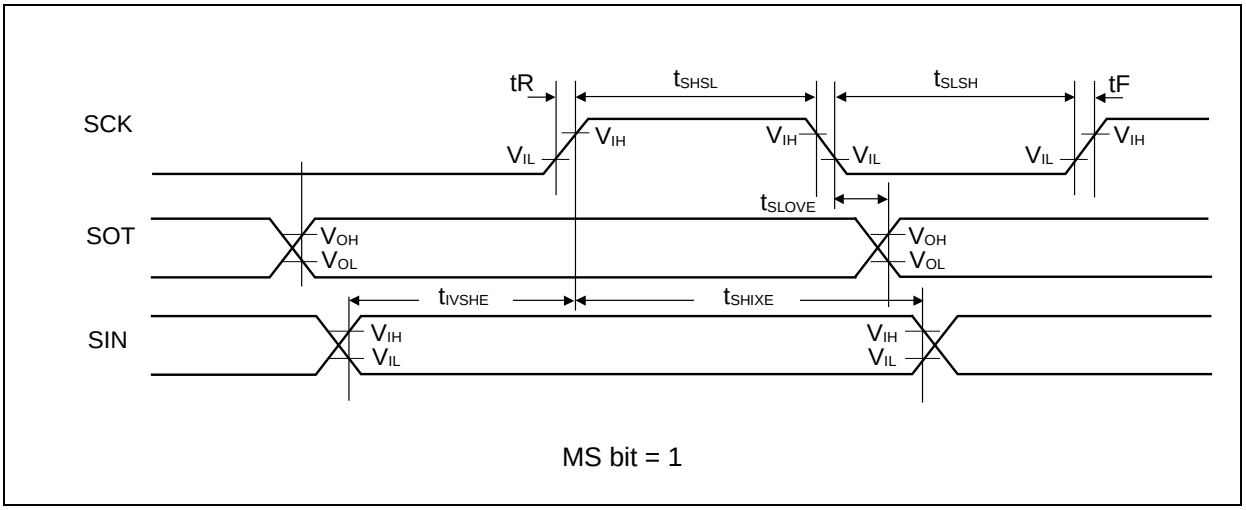

MS bit = 1

■When using synchronous serial chip select (SPI = 1, SCINV = 0, MS=0, CSLVL=1)

(V_{CC} = 2.7V to 5.5V, V_{SS} = 0V)

Parameter	Symbol	Conditions	V_{CC} < 4.5V		V_{CC} ≥ 4.5V		Unit
			Min	Max	Min	Max	
SCS↓→SCK↓setup time	t_{CSSI}	Internal shift clock operation	(*1)-50	(*1)+0	(*1)-50	(*1)+0	ns
SCK↑→SCS↑ hold time	t_{CSHI}		(*2)+0	(*2)+50	(*2)+0	(*2)+50	ns
SCS deselect time	t_{CSDI}		(*3)-50 +5t_{CYCP}	(*3)+50 +5t_{CYCP}	(*3)-50 +5t_{CYCP}	(*3)+50 +5t_{CYCP}	ns
SCS↓→SCK↓setup time	t_{CSSE}	External shift clock operation	3t_{CYCP}+30	-	3t_{CYCP}+30	-	ns
SCK↑→SCS↑ hold time	t_{CSHE}		0	-	0	-	ns
SCS deselect time	t_{CSDE}		3t_{CYCP}+30	-	3t_{CYCP}+30	-	ns
SCS↓→SUT delay time	t_{DSE}		-	40	-	40	ns
SCS↑→SUT delay time	t_{DEE}		0	-	0	-	ns

(*1): CSSU bit value×serial chip select timing operating clock cycle [ns]

(*2): CSHD bit value×serial chip select timing operating clock cycle [ns]

(*3): CSDS bit value×serial chip select timing operating clock cycle [ns]

Notes:

- t_{CYCP} indicates the APB bus clock cycle time.
  About the APB bus number which UART is connected to, see "Block Diagram" in this datasheet.
- About CSSU, CSHD, CSDS, serial chip select timing operating clock, see "FM4 Family Peripheral Manual".
- When the external load capacitance C_L = 30pF.

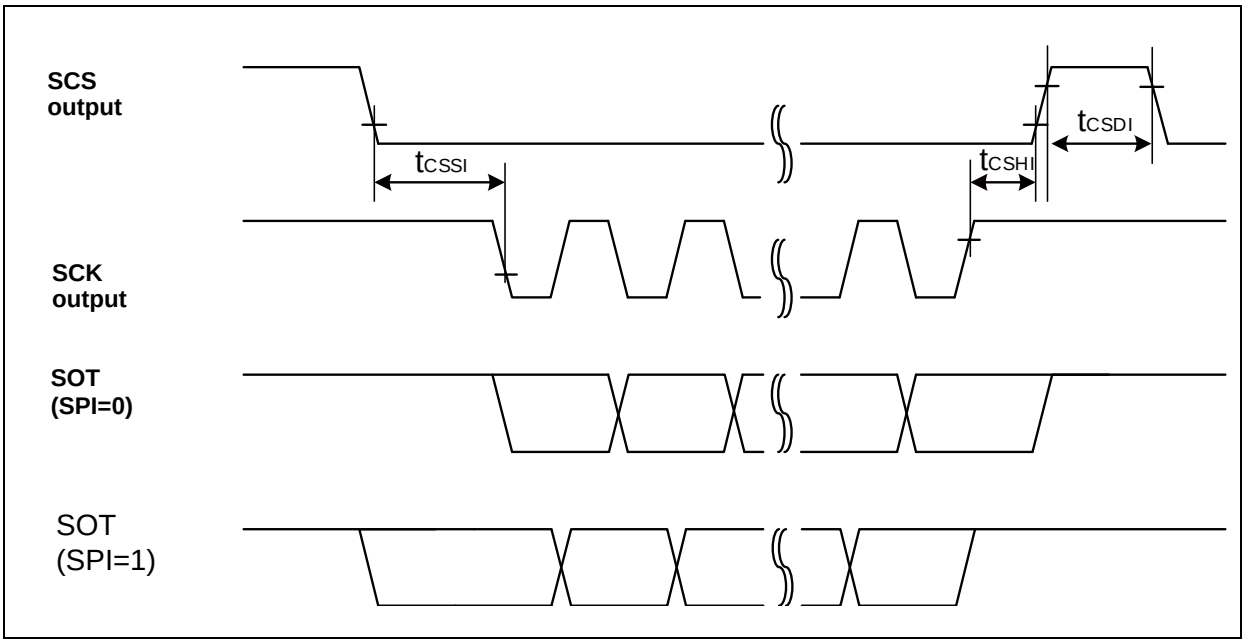
SCS output
tCSSI
tCSDI
tCSHI
SCK output
SOT (SPI=0)
SOT (SPI=1)

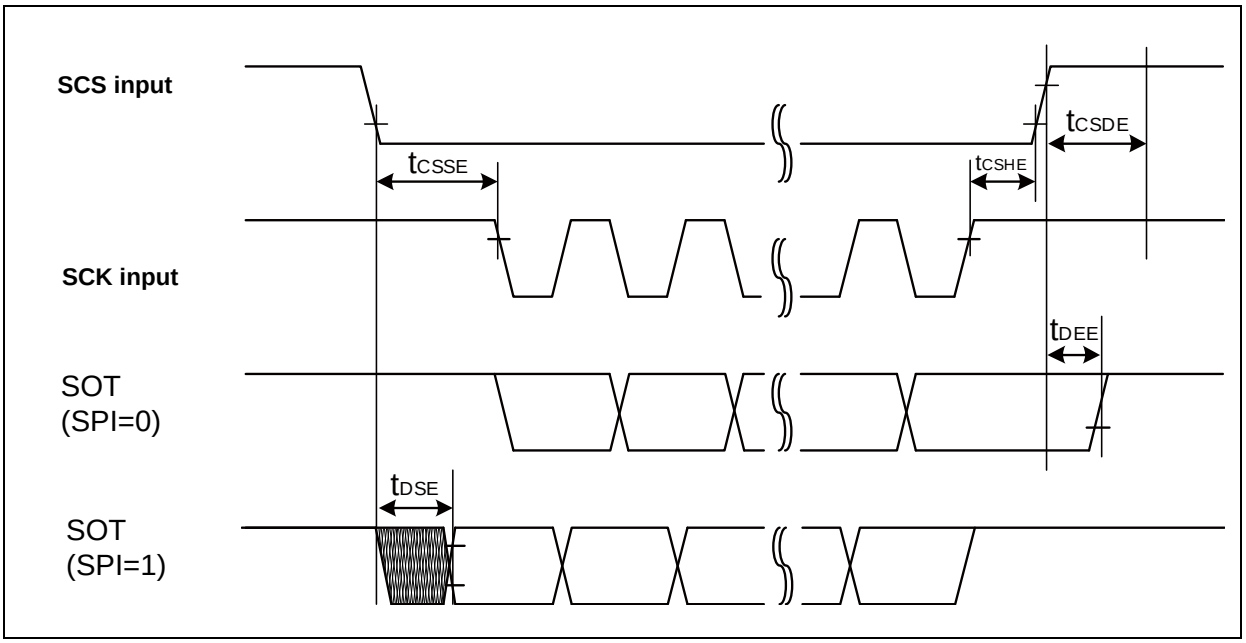
SCS input
tCSSE
tCSDE
tCSHE
SCK input
tDEE
SOT (SPI=0)
tDSE
SOT (SPI=1)

■When using synchronous serial chip select (SPI = 1, SCINV = 1, MS=0, CSLVL=1)

(V_{CC} = 2.7V to 5.5V, V_{SS} = 0V)

Parameter	Symbol	Conditions	V_{cc} < 4.5V		V_{cc} ≥ 4.5V		Unit
			Min	Max	Min	Max	
SCS↓→SCK↑setup time	t_{CSSI}	Internal shift clock operation	(*1)-50	(*1)+0	(*1)-50	(*1)+0	ns
SCK↓→SCS↑ hold time	t_{CSHI}		(*2)+0	(*2)+50	(*2)+0	(*2)+50	ns
SCS deselect time	t_{CSDI}		(*3)-50 +5t_{CYCP}	(*3)+50 +5t_{CYCP}	(*3)-50 +5t_{CYCP}	(*3)+50 +5t_{CYCP}	ns
SCS↓→SCK↑setup time	t_{CSSE}	External shift clock operation	3t_{CYCP}+30	-	3t_{CYCP}+30	-	ns
SCK↓→SCS↑ hold time	t_{CSHE}		0	-	0	-	ns
SCS deselect time	t_{CSDE}		3t_{CYCP}+30	-	3t_{CYCP}+30	-	ns
SCS↓→SOT delay time	t_{DSE}		-	40	-	40	ns
SCS↑→SOT delay time	t_{DEE}		0	-	0	-	ns

(*1): CSSU bit value×serial chip select timing operating clock cycle [ns]

(*2): CSHD bit value×serial chip select timing operating clock cycle [ns]

(*3): CSDS bit value×serial chip select timing operating clock cycle [ns]

Notes:

- t_{CYCP} indicates the APB bus clock cycle time.
  About the APB bus number which UART is connected to, see "Block Diagram" in this datasheet.
- About CSSU, CSHD, CSDS, serial chip select timing operating clock, see "FM4 Family Peripheral Manual".
- When the external load capacitance C_L = 30pF.

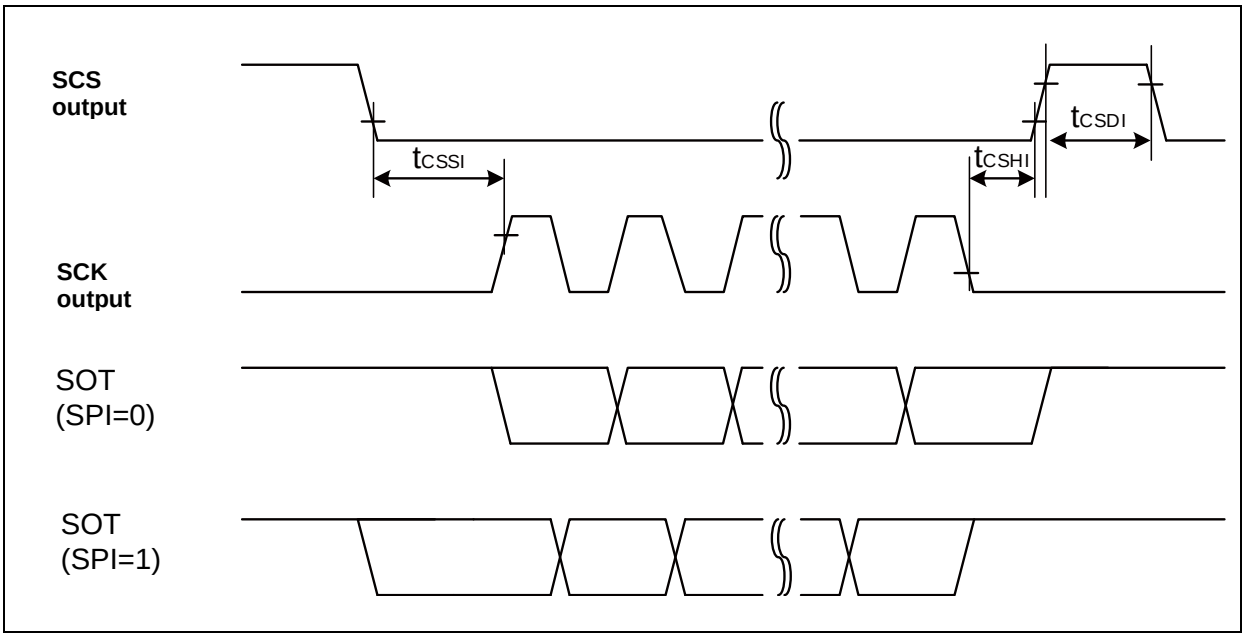
SCS
output
tCSSI
tCSDI
tCSHI
SCK
output
SOT
(SPI=0)
SOT
(SPI=1)

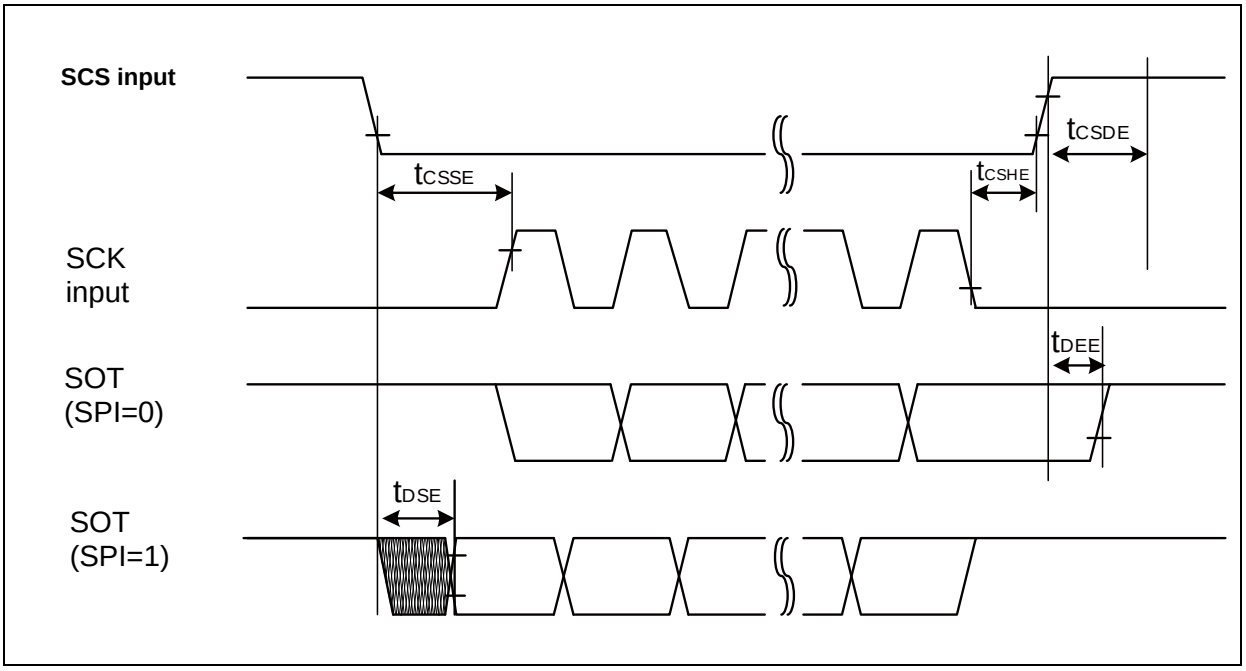
SCS input
tCSSE
tCSDE
tCSHE
SCK
input
tDEE
SOT
(SPI=0)
tDSE
SOT
(SPI=1)

■When using synchronous serial chip select (SPI = 1, SCINV = 0, MS=0, CSLVL=0)

(V_{CC} = 2.7V to 5.5V, V_{SS} = 0V)

Parameter	Symbol	Conditions	V_{CC} < 4.5V		V_{CC} ≥ 4.5V		Unit
			Min	Max	Min	Max	
SCS↑→SCK↓setup time	t_{CSSI}	Internal shift clock operation	(*1)-50	(*1)+0	(*1)-50	(*1)+0	ns
SCK↑→SCS↓ hold time	t_{CSHI}		(*2)+0	(*2)+50	(*2)+0	(*2)+50	ns
SCS deselect time	t_{CSDI}		(*3)-50 +5t_{CYCP}	(*3)+50 +5t_{CYCP}	(*3)-50 +5t_{CYCP}	(*3)+50 +5t_{CYCP}	ns
SCS↑→SCK↓setup time	t_{CSSE}	External shift clock operation	3t_{CYCP}+30	-	3t_{CYCP}+30	-	ns
SCK↑→SCS↓ hold time	t_{CSHE}		0	-	0	-	ns
SCS deselect time	t_{CSDE}		3t_{CYCP}+30	-	3t_{CYCP}+30	-	ns
SCS↑→SOT delay time	t_{DSE}		-	40	-	40	ns
SCS↓→SOT delay time	t_{DEE}		0	-	0	-	ns

(*1): CSSU bit value×serial chip select timing operating clock cycle [ns]

(*2): CSHD bit value×serial chip select timing operating clock cycle [ns]

(*3): CSDS bit value×serial chip select timing operating clock cycle [ns]

Notes:

- t_{CYCP} indicates the APB bus clock cycle time.
  About the APB bus number which UART is connected to, see "Block Diagram" in this datasheet.
- About CSSU, CSHD, CSDS, serial chip select timing operating clock, see "FM4 Family Peripheral Manual".
- When the external load capacitance C_L = 30pF.

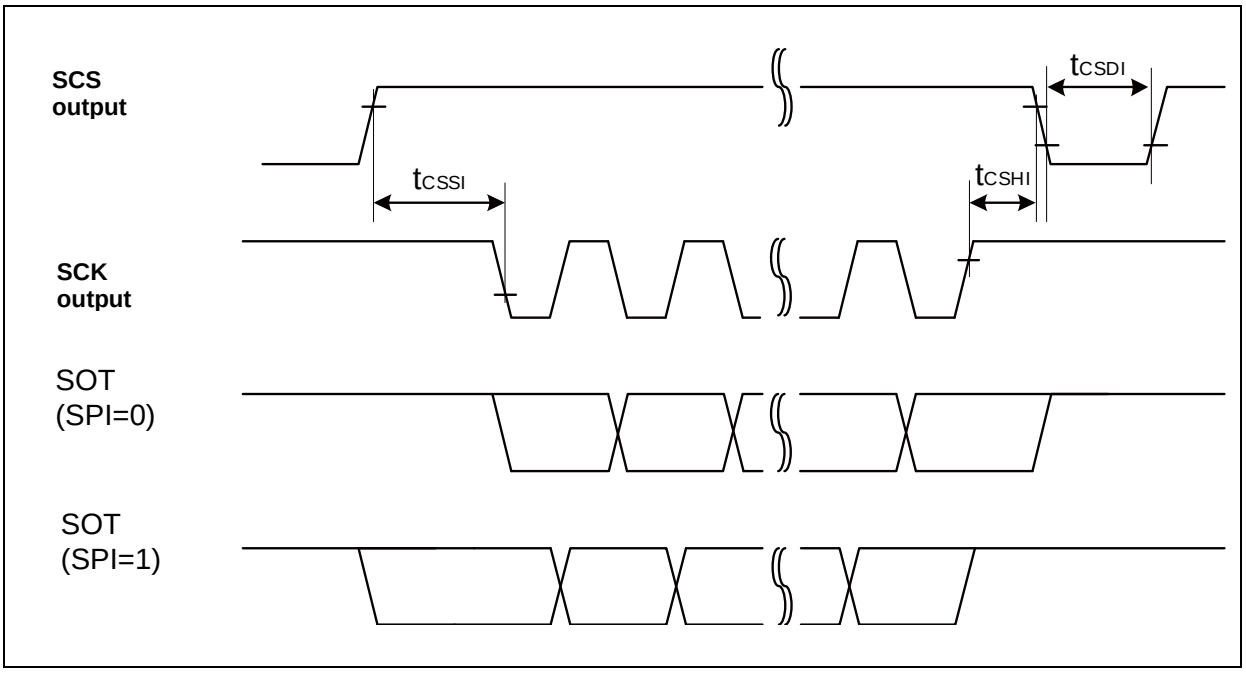
SCS
output
tCSDI
tCSSI
tCSHI
SCK
output
SOT
(SPI=0)
SOT
(SPI=1)

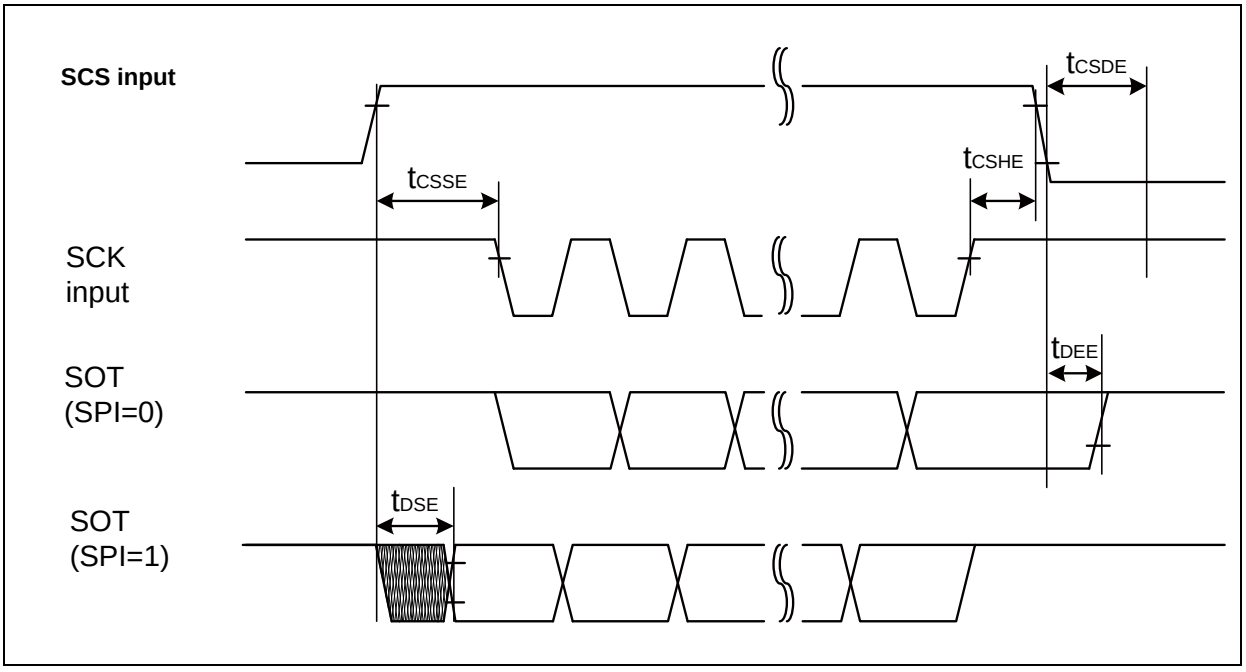
SCS input
tCSDE
tCSSE
tCSHE
SCK
input
tDEE
SOT
(SPI=0)
tDSE
SOT
(SPI=1)

■When using synchronous serial chip select (SPI = 1, SCINV = 1, MS=0, CSLVL=0)

(V_{CC} = 2.7V to 5.5V, V_{SS} = 0V)

Parameter	Symbol	Conditions	V_{CC} < 4.5V		V_{CC} ≥ 4.5V		Unit
			Min	Max	Min	Max	
SCS↑→SCK↑setup time	t_{CSSI}	Internal shift clock operation	(*1)-50	(*1)+0	(*1)-50	(*1)+0	ns
SCK↓→SCS↓ hold time	t_{CSHI}		(*2)+0	(*2)+50	(*2)+0	(*2)+50	ns
SCS deselect time	t_{CSDI}		(*3)-50 +5t_{CYCP}	(*3)+50 +5t_{CYCP}	(*3)-50 +5t_{CYCP}	(*3)+50 +5t_{CYCP}	ns
SCS↑→SCK↑setup time	t_{CSSE}	External shift clock operation	3t_{CYCP}+30	-	3t_{CYCP}+30	-	ns
SCK↓→SCS↓ hold time	t_{CSHE}		0	-	0	-	ns
SCS deselect time	t_{CSDE}		3t_{CYCP}+30	-	3t_{CYCP}+30	-	ns
SCS↑→SOT delay time	t_{DSE}		-	40	-	40	ns
SCS↓→SOT delay time	t_{DEE}		0	-	0	-	ns

(*1): CSSU bit value×serial chip select timing operating clock cycle [ns]

(*2): CSHD bit value×serial chip select timing operating clock cycle [ns]

(*3): CSDS bit value×serial chip select timing operating clock cycle [ns]

Notes:

- t_{CYCP} indicates the APB bus clock cycle time.
  About the APB bus number which UART is connected to, see "Block Diagram" in this datasheet.
- About CSSU, CSHD, CSDS, serial chip select timing operating clock, see "FM4 Family Peripheral Manual".
- When the external load capacitance C_L = 30pF.

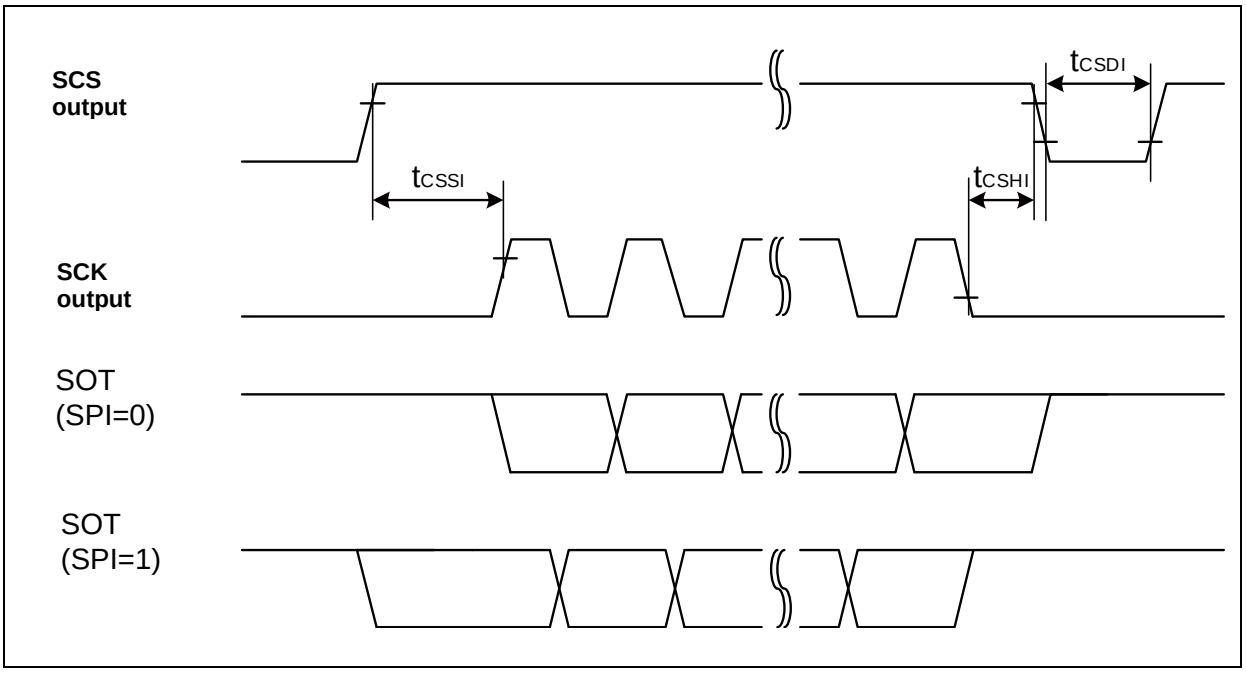
SCS
output
tCSDI
tCSSI
tCSHI
SCK
output
SOT
(SPI=0)
SOT
(SPI=1)

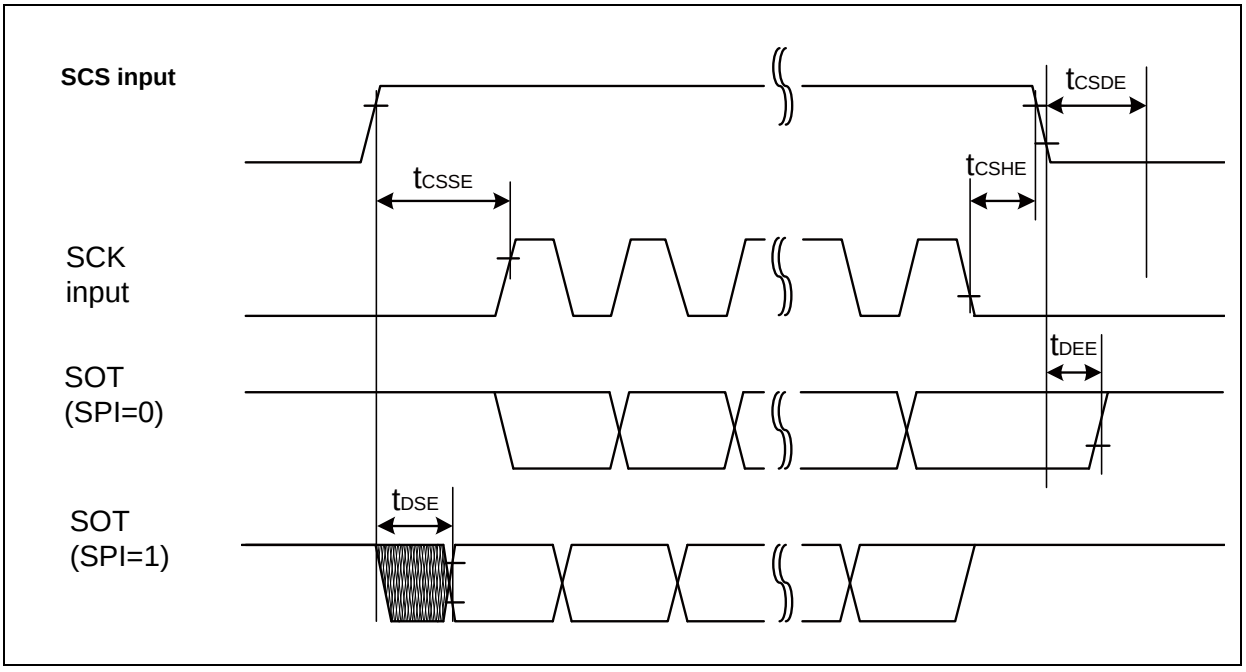
SCS input
tCSDE
tCSSE
tCSHE
SCK
input
tDEE
SOT
(SPI=0)
tDSE
SOT
(SPI=1)

■High-speed synchronous serial (SPI = 0, SCINV = 0)

(V_{CC} = 2.7V to 5.5V, V_{SS} = 0V)

Parameter	Symbol	Pin name	Conditions	V_{CC} < 4.5V		V_{CC} ≥ 4.5V		Unit
				Min	Max	Min	Max	
Serial clock cycle time	t_{SCYC}	SCKx	Internal shift clock operation	$4t_{CYCP}$	-	$4t_{CYCP}$	-	ns
SCK↓→SOT delay time	t_{SLOVI}	SCKx, SOTx		-10	+10	-10	+10	ns
SIN→SCK↑ setup time	t_{IVSHI}	SCKx, SINx		14	-	12.5	-	ns
				12.5*				
SCK↑→SIN hold time	t_{SHIXI}	SCKx, SINx		5	-	5	-	ns
Serial clock "L" pulse width	t_{SLSH}	SCKx	External shift clock operation	$2t_{CYCP}$ – 5	-	$2t_{CYCP}$ – 5	-	ns
Serial clock "H" pulse width	t_{SHSL}	SCKx		t_{CYCP} + 10	-	t_{CYCP} + 10	-	ns
SCK↓→SOT delay time	t_{SLOVE}	SCKx, SOTx		-	15	-	15	ns
SIN→SCK↑ setup time	t_{IVSHE}	SCKx, SINx		5	-	5	-	ns
SCK↑→SIN hold time	t_{SHIXE}	SCKx,		5	-	5	-	ns
		SINx						
SCK falling time	tF	SCKx		-	5	-	5	ns
SCK rising time	tR	SCKx		-	5	-	5	ns

Notes:

- The above characteristics apply to CLK synchronous mode.
- t_{CYCP} indicates the APB bus clock cycle time.
  About the APB bus number which UART is connected to, see "Block Diagram" in this datasheet.
- These characteristics only guarantee the following pins.
  - No chip select : SIN4_1, SOT4_1, SCK4_1
  - Chip select : SIN6_1, SOT6_1, SCK6_1, SCS6_1
- When the external load capacitance C_L = 30pF. (For *, when C_L = 10pF)

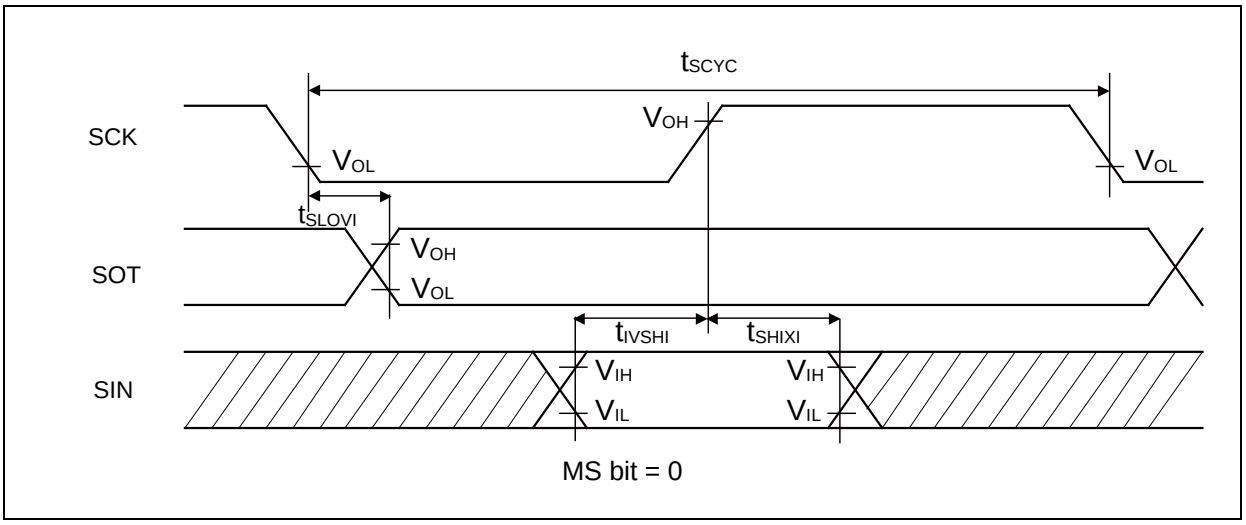

MS bit = 0

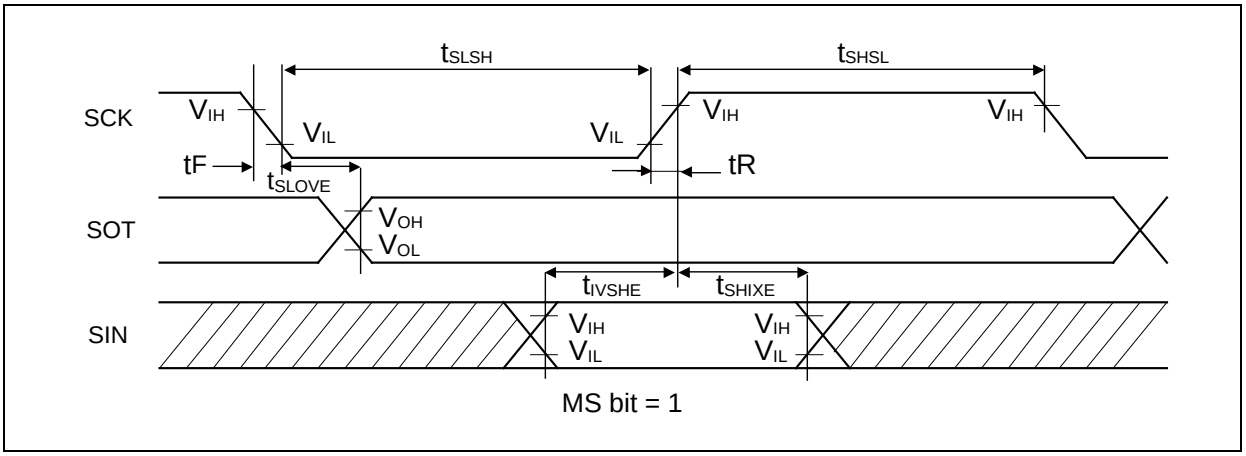

MS bit = 1

■High-speed synchronous serial (SPI = 0, SCINV = 1)

(V_{CC} = 2.7V to 5.5V, V_{SS} = 0V)

Parameter	Symbol	Pin name	Conditions	V_{CC} < 4.5V		V_{CC} ≥ 4.5V		Unit
				Min	Max	Min	Max	
Serial clock cycle time	t_{SCYC}	SCKx	Internal shift clock operation	$4t_{CYCP}$	-	$4t_{CYCP}$	-	ns
SCK↑→SOT delay time	t_{SHOVI}	SCKx, SOTx		-10	+10	-10	+10	ns
SIN→SCK↓ setup time	t_{IVSLI}	SCKx, SINx		14	-	12.5	-	ns
				12.5*				
SCK↓→SIN hold time	t_{SLIXI}	SCKx, SINx		5	-	5	-	ns
Serial clock "L" pulse width	t_{SLSH}	SCKx	External shift clock operation	$2t_{CYCP}$ – 5	-	$2t_{CYCP}$ – 5	-	ns
Serial clock "H" pulse width	t_{SHSL}	SCKx		t_{CYCP} + 10	-	t_{CYCP} + 10	-	ns
SCK↑→SOT delay time	t_{SHOVE}	SCKx, SOTx		-	15	-	15	ns
SIN→SCK↓ setup time	t_{IVSLE}	SCKx, SINx		5	-	5	-	ns
SCK↓→SIN hold time	t_{SLIXE}	SCKx, SINx		5	-	5	-	ns
SCK falling time	tF	SCKx		-	5	-	5	ns
SCK rising time	tR	SCKx		-	5	-	5	ns

Notes:

- The above characteristics apply to CLK synchronous mode.
- t_{CYCP} indicates the APB bus clock cycle time.
  About the APB bus number which UART is connected to, see "Block Diagram" in this datasheet.
- These characteristics only guarantee the following pins.
  - No chip select : SIN4_1, SOT4_1, SCK4_1
  - Chip select : SIN6_1, SOT6_1, SCK6_1, SCS6_1
- When the external load capacitance C_L = 30pF. (For *, when C_L = 10pF)

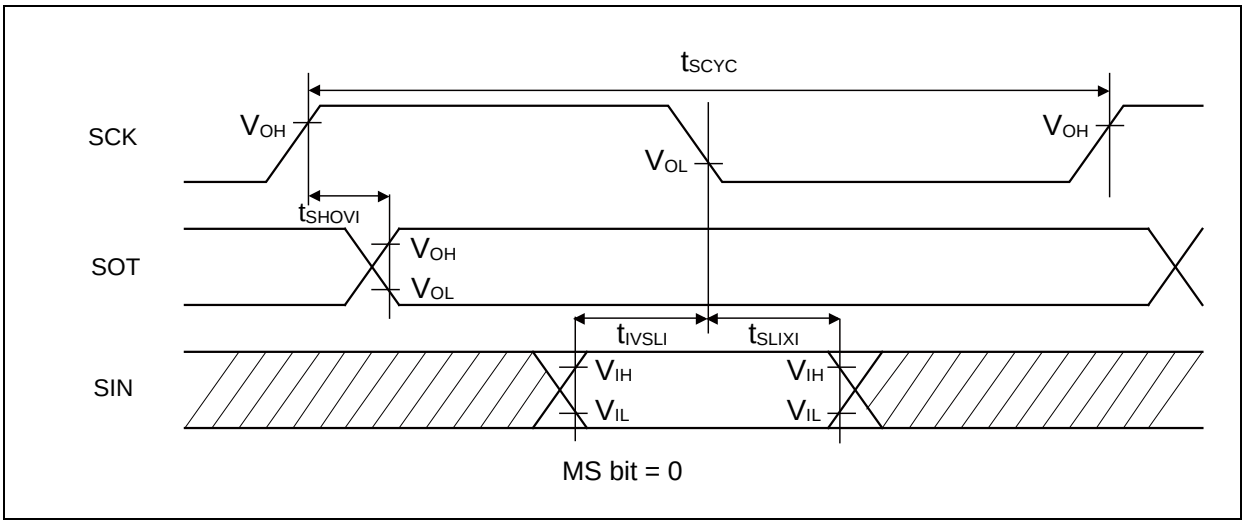

MS bit = 0

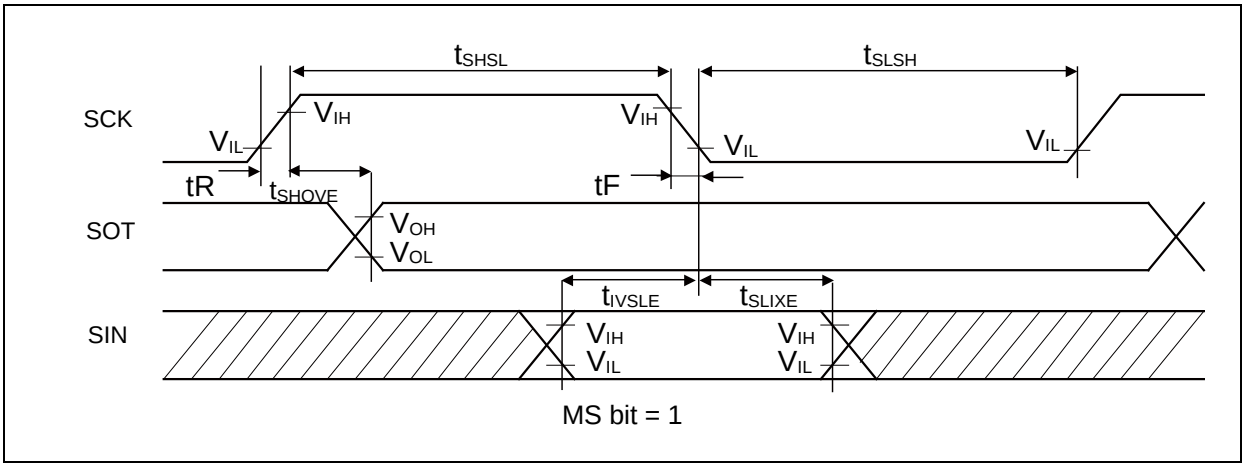

MS bit = 1

■High-speed synchronous serial (SPI = 1, SCINV = 0)

(V_{CC} = 2.7V to 5.5V, V_{SS} = 0V)

Parameter	Symbol	Pin name	Conditions	V_{CC} < 4.5V		V_{CC} ≥ 4.5V		Unit
				Min	Max	Min	Max	
Serial clock cycle time	t_{SCYC}	SCKx	Internal shift clock operation	$4t_{CYCP}$	-	$4t_{CYCP}$	-	ns
SCK↑→SOT delay time	t_{SHOVI}	SCKx, SOTx		-10	+10	-10	+10	ns
SIN→SCK↓ setup time	t_{IVSLI}	SCKx, SINx		14 12.5*	-	12.5	-	ns
SCK↓→SIN hold time	t_{SLIXI}	SCKx, SINx		5	-	5	-	ns
SOT→SCK↓ delay time	t_{SOVLI}	SCKx, SOTx		$2t_{CYCP}$ – 10	-	$2t_{CYCP}$ – 10	-	ns
Serial clock "L" pulse width	t_{SLSH}	SCKx	External shift clock operation	$2t_{CYCP}$ – 5	-	$2t_{CYCP}$ – 5	-	ns
Serial clock "H" pulse width	t_{SHSL}	SCKx		t_{CYCP} + 10	-	t_{CYCP} + 10	-	ns
SCK↑→SOT delay time	t_{SHOVE}	SCKx, SOTx		-	15	-	15	ns
SIN→SCK↓ setup time	t_{IVSLE}	SCKx, SINx		5	-	5	-	ns
SCK↓→SIN hold time	t_{SLIXE}	SCKx, SINx		5	-	5	-	ns
SCK falling time	tF	SCKx		-	5	-	5	ns
SCK rising time	tR	SCKx		-	5	-	5	ns

Notes:

- The above characteristics apply to CLK synchronous mode.
- t_{CYCP} indicates the APB bus clock cycle time.
  About the APB bus number which UART is connected to, see "Block Diagram" in this datasheet.
- These characteristics only guarantee the following pins.
  - No chip select : SIN4_1, SOT4_1, SCK4_1
  - Chip select : SIN6_1, SOT6_1, SCK6_1, SCS6_1
- When the external load capacitance C_L = 30pF. (For *, when C_L = 10pF)

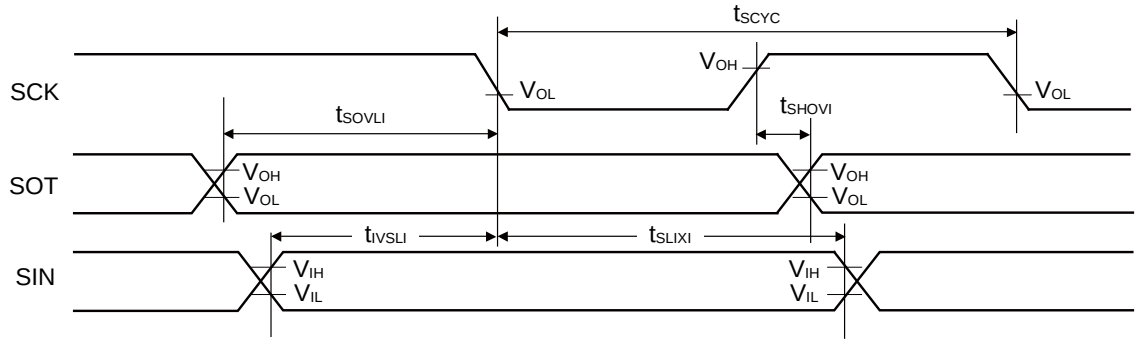

MS bit = 0

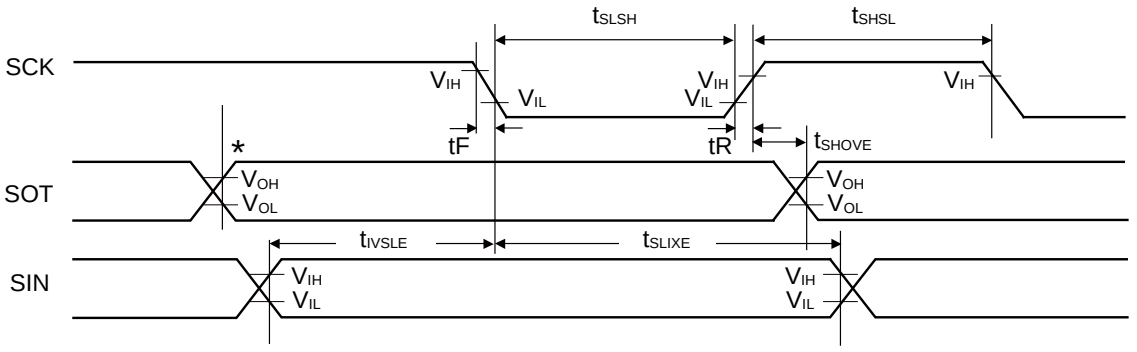

MS bit = 1

*: Changes when writing to TDR register

■High-speed synchronous serial (SPI = 1, SCINV = 1)

(V_{CC} = 2.7V to 5.5V, V_{SS} = 0V)

Parameter	Symbol	Pin name	Conditions	V_{CC} < 4.5V		V_{CC} ≥ 4.5V		Unit
				Min	Max	Min	Max	
Internal shift clock operation	t_{SCYC}	SCKx	Internal shift clock operation	$4t_{CYCP}$	-	$4t_{CYCP}$	-	ns
SCK↓→SOT delay time	t_{SLOVI}	SCKx, SOTx		-10	+10	-10	+10	ns
SIN→SCK↑ setup time	t_{IVSHI}	SCKx, SINx		14 12.5*	-	12.5	-	ns
SCK↑→SIN hold time	t_{SHIXI}	SCKx, SINx		5	-	5	-	ns
SOT→SCK↑ delay time	t_{SOVHI}	SCKx, SOTx		$2t_{CYCP}$ – 10	-	$2t_{CYCP}$ – 10	-	ns
Serial clock "L" pulse width	t_{SLSH}	SCKx	External shift clock operation	$2t_{CYCP}$ – 5	-	$2t_{CYCP}$ – 5	-	ns
Serial clock "H" pulse width	t_{SHSL}	SCKx		t_{CYCP} + 10	-	t_{CYCP} + 10	-	ns
SCK↓→SOT delay time	t_{SLOVE}	SCKx, SOTx		-	15	-	15	ns
SIN→SCK↑ setup time	t_{IVSHE}	SCKx, SINx		5	-	5	-	ns
SCK↑→SIN hold time	t_{SHIXE}	SCKx, SINx		5	-	5	-	ns
SCK falling time	tF	SCKx		-	5	-	5	ns
SCK rising time	tR	SCKx		-	5	-	5	ns

Notes:

- The above characteristics apply to CLK synchronous mode.
- t_{CYCP} indicates the APB bus clock cycle time.
  About the APB bus number which UART is connected to, see "Block Diagram" in this datasheet.
- These characteristics only guarantee the following pins.
  - No chip select : SIN4_1, SOT4_1, SCK4_1
  - Chip select : SIN6_1, SOT6_1, SCK6_1, SCS6_1
- When the external load capacitance C_L = 30pF. (For *, when C_L = 10pF)

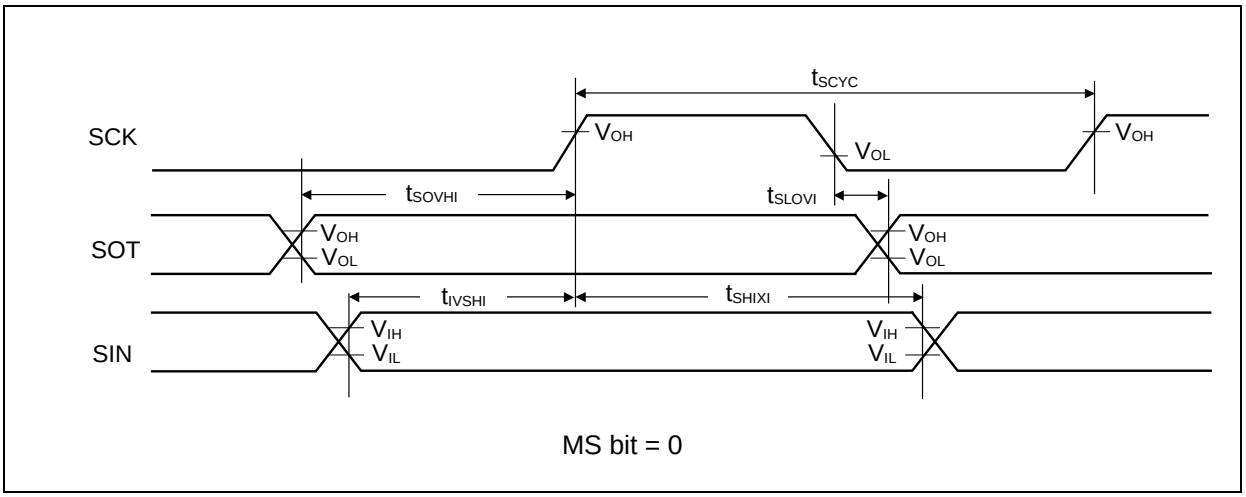

MS bit = 0

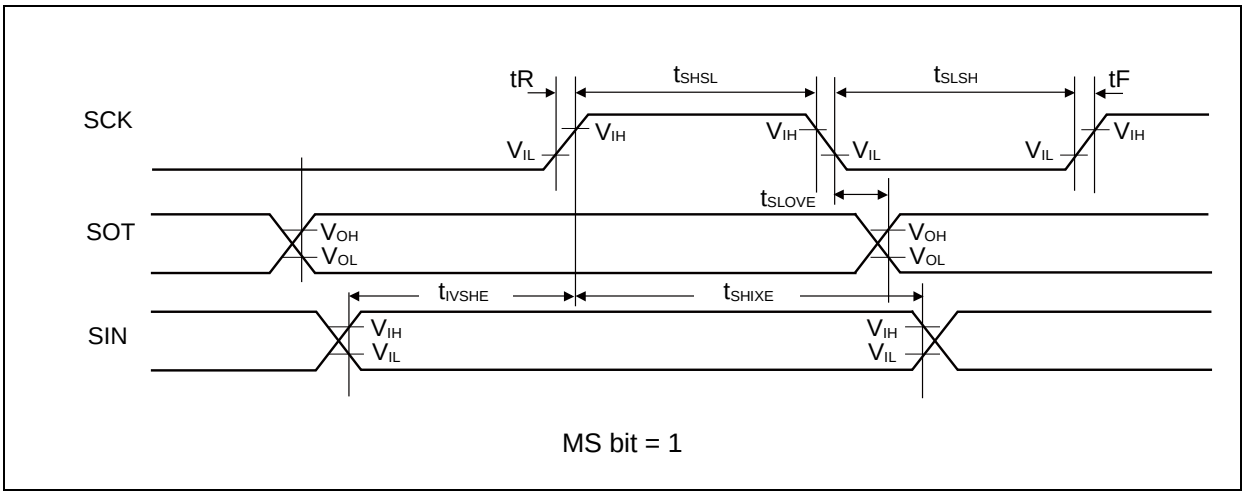

MS bit = 1

■When using high-speed synchronous serial chip select (SPI = 1, SCINV = 0, MS=0, CSLVL=1)

(V_{CC} = 2.7V to 5.5V, V_{SS} = 0V)

Parameter	Symbol	Conditions	V_{CC} < 4.5V		V_{CC} ≥ 4.5V		Unit
			Min	Max	Min	Max	
SCS↓→SCK↓setup time	t_{CSSI}	Internal shift clock operation	(*1)-20	(*1)+0	(*1)-20	(*1)+0	ns
SCK↑→SCS↑ hold time	t_{CSHI}		(*2)+0	(*2)+20	(*2)+0	(*2)+20	ns
SCS deselect time	t_{CSDI}		(*3)-20 +5t_{CYCP}	(*3)+20 +5t_{CYCP}	(*3)-20 +5t_{CYCP}	(*3)+20 +5t_{CYCP}	ns
SCS↓→SCK↓setup time	t_{CSSE}	External shift clock operation	3t_{CYCP}+15	-	3t_{CYCP}+15	-	ns
SCK↑→SCS↑ hold time	t_{CSHE}		0	-	0	-	ns
SCS deselect time	t_{CSDE}		3t_{CYCP}+15	-	3t_{CYCP}+15	-	ns
SCS↓→SOT delay time	t_{DSE}		-	25	-	25	ns
SCS↑→SOT delay time	t_{DEE}		0	-	0	-	ns

(*1): CSSU bit value×serial chip select timing operating clock cycle [ns]

(*2): CSHD bit value×serial chip select timing operating clock cycle [ns]

(*3): CSDS bit value×serial chip select timing operating clock cycle [ns]

Notes:

- t_{CYCP} indicates the APB bus clock cycle time.
  About the APB bus number which UART is connected to, see "Block Diagram" in this datasheet.
- About CSSU, CSHD, CSDS, serial chip select timing operating clock, see "FM4 Family Peripheral Manual".
- When the external load capacitance C_L = 30pF.

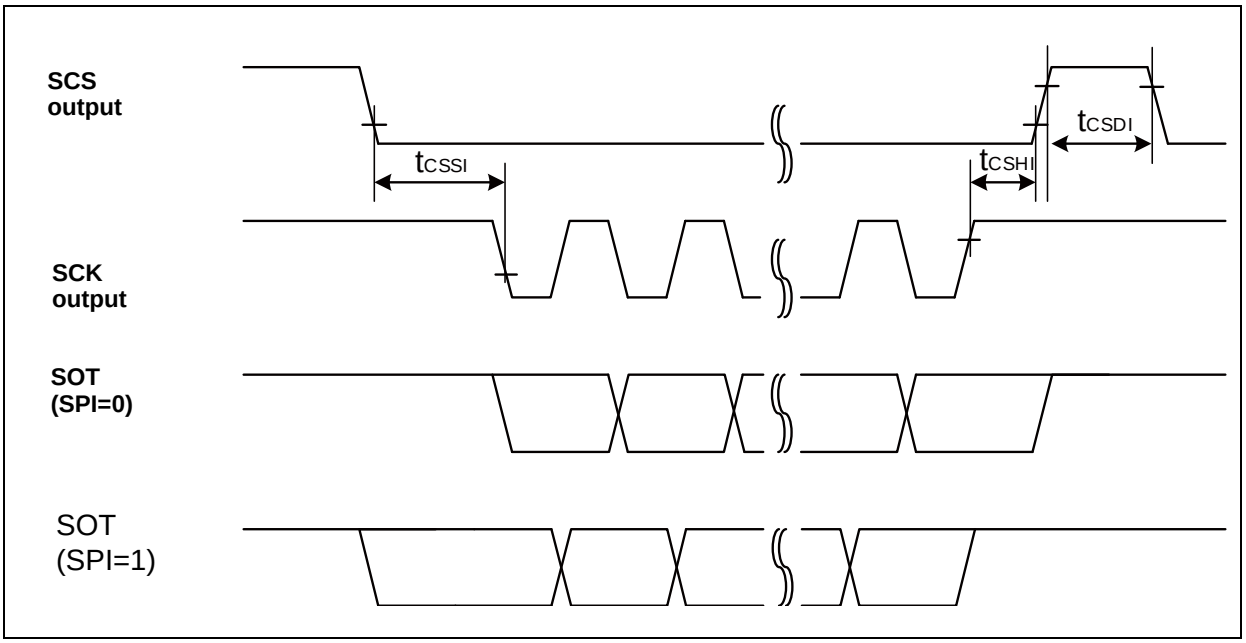
SCS output
tCSSI
tCSDI
tCSHI
SCK output
SOT (SPI=0)
SOT (SPI=1)

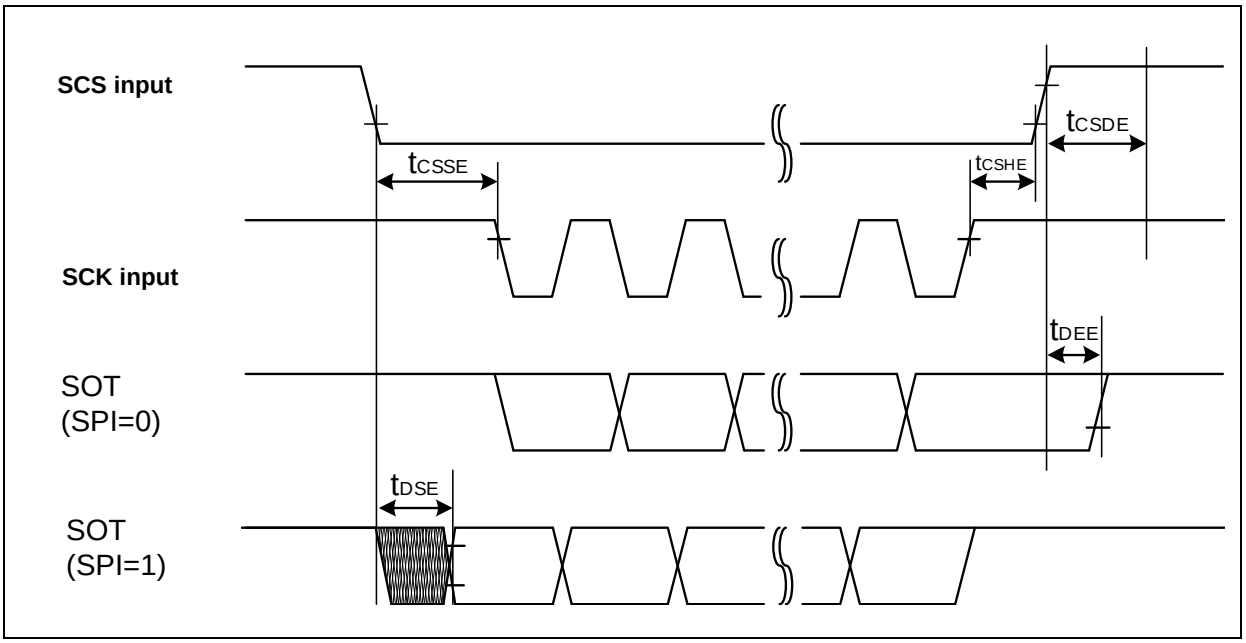
SCS input
tCSSE
tCSDE
tCSHE
SCK input
tDEE
SOT (SPI=0)
tDSE
SOT (SPI=1)

■When using high-speed synchronous serial chip select (SPI = 1, SCINV = 1, MS=0, CSLVL=1)

(V_{CC} = 2.7V to 5.5V, V_{SS} = 0V)

Parameter	Symbol	Conditions	V_{CC} < 4.5V		V_{CC} ≥ 4.5V		Unit
			Min	Max	Min	Max	
SCS↓→SCK↑setup time	t_{CSSI}	Internal shift clock operation	(*1)-20	(*1)+0	(*1)-20	(*1)+0	ns
SCK↓→SCS↑ hold time	t_{CSHI}		(*2)+0	(*2)+20	(*2)+0	(*2)+20	ns
SCS deselect time	t_{CSDI}		(*3)-20 +5t_{CYCP}	(*3)+20 +5t_{CYCP}	(*3)-20 +5t_{CYCP}	(*3)+20 +5t_{CYCP}	ns
SCS↓→SCK↑setup time	t_{CSSE}	External shift clock operation	3t_{CYCP}+15	-	3t_{CYCP}+15	-	ns
SCK↓→SCS↑ hold time	t_{CSHE}		0	-	0	-	ns
SCS deselect time	t_{CSDE}		3t_{CYCP}+15	-	3t_{CYCP}+15	-	ns
SCS↓→SOT delay time	t_{DSE}		-	25	-	25	ns
SCS↑→SOT delay time	t_{DEE}		0	-	0	-	ns

(*1): CSSU bit value×serial chip select timing operating clock cycle [ns]

(*2): CSHD bit value×serial chip select timing operating clock cycle [ns]

(*3): CSDS bit value×serial chip select timing operating clock cycle [ns]

Notes:

- t_{CYCP} indicates the APB bus clock cycle time.
  About the APB bus number which UART is connected to, see "Block Diagram" in this datasheet.
- About CSSU, CSHD, CSDS, serial chip select timing operating clock, see "FM4 Family Peripheral Manual".
- When the external load capacitance C_L = 30pF.

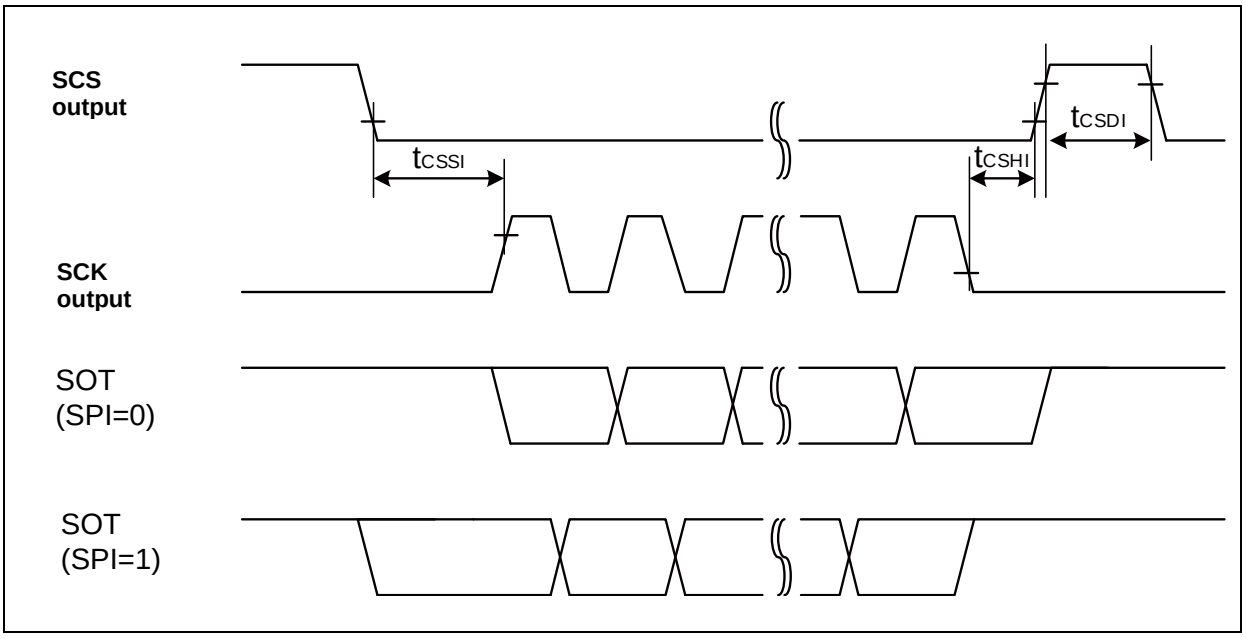
SCS
output
tCSSI
tCSDI
tCSHI
SCK
output
SOT
(SPI=0)
SOT
(SPI=1)

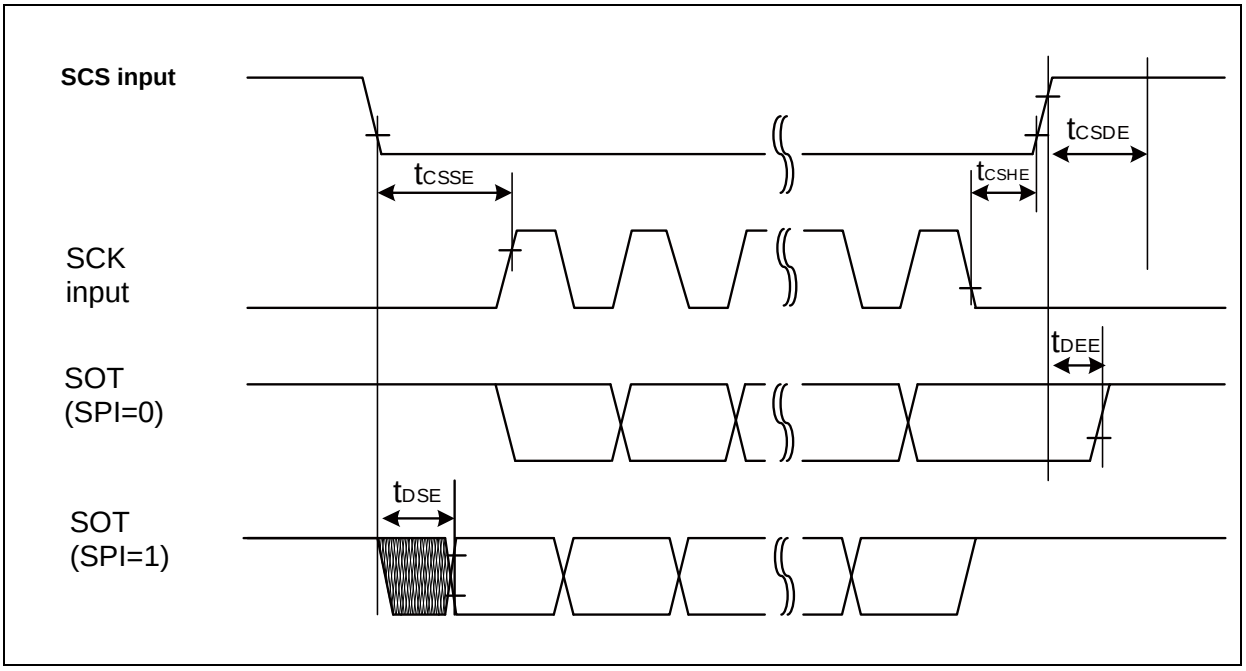
SCS input
tCSSE
tCSDE
tCSHE
SCK
input
tDEE
SOT
(SPI=0)
tDSE
SOT
(SPI=1)

■When using high-speed synchronous serial chip select (SPI = 1, SCINV = 0, MS=0, CSLVL=0)

(V_{CC} = 2.7V to 5.5V, V_{SS} = 0V)

Parameter	Symbol	Conditions	V_{CC} < 4.5V		V_{CC} ≥ 4.5V		Unit
			Min	Max	Min	Max	
SCS↑→SCK↓setup time	t_{CSSI}	Internal shift clock operation	(*1)-20	(*1)+0	(*1)-20	(*1)+0	ns
SCK↑→SCS↓ hold time	t_{CSHI}		(*2)+0	(*2)+20	(*2)+0	(*2)+20	ns
SCS deselect time	t_{CSDI}		(*3)-20 +5t_{CYCP}	(*3)+20 +5t_{CYCP}	(*3)-20 +5t_{CYCP}	(*3)+20 +5t_{CYCP}	ns
SCS↑→SCK↓setup time	t_{CSSE}	External shift clock operation	3t_{CYCP}+15	-	3t_{CYCP}+15	-	ns
SCK↑→SCS↓ hold time	t_{CSHE}		0	-	0	-	ns
SCS deselect time	t_{CSDE}		3t_{CYCP}+15	-	3t_{CYCP}+15	-	ns
SCS↑→SOT delay time	t_{DSE}		-	25	-	25	ns
SCS↓→SOT delay time	t_{DEE}		0	-	0	-	ns

(*1): CSSU bit value×serial chip select timing operating clock cycle [ns]

(*2): CSHD bit value×serial chip select timing operating clock cycle [ns]

(*3): CSDS bit value×serial chip select timing operating clock cycle [ns]

Notes:

- t_{CYCP} indicates the APB bus clock cycle time.
  About the APB bus number which UART is connected to, see "Block Diagram" in this datasheet.
- About CSSU, CSHD, CSDS, serial chip select timing operating clock, see "FM4 Family Peripheral Manual".
- When the external load capacitance C_L = 30pF.

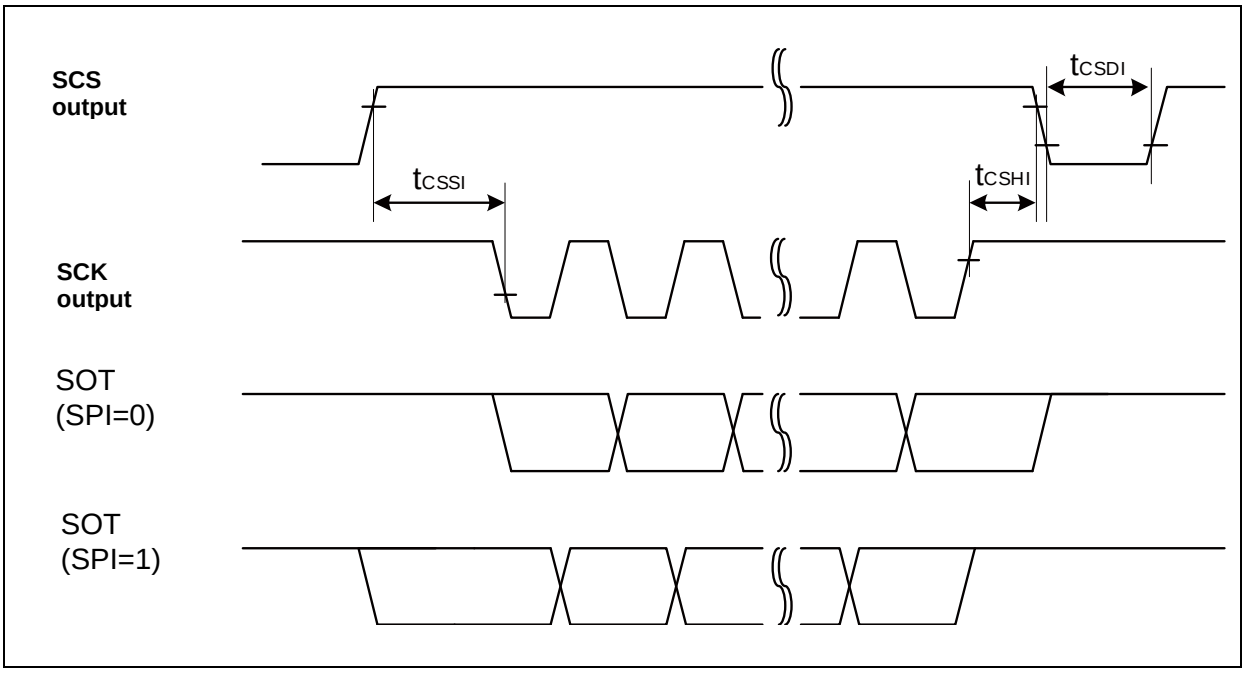
SCS
output
tCSDI
tCSSI
tCSHI
SCK
output
SOT
(SPI=0)
SOT
(SPI=1)

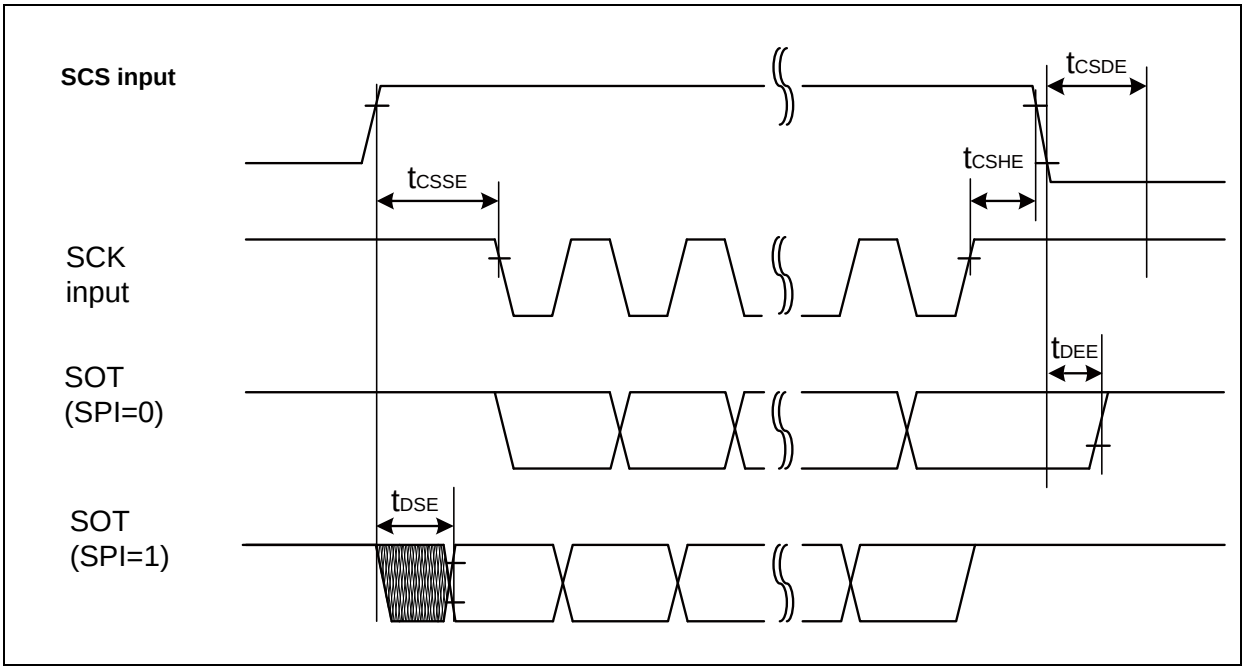
SCS input
tCSDE
tCSSE
tCSHE
SCK
input
tDEE
SOT
(SPI=0)
tDSE
SOT
(SPI=1)

■When using high-speed synchronous serial chip select (SPI = 1, SCINV = 1, MS=0, CSLVL=0)

(V_{CC} = 2.7V to 5.5V, V_{SS} = 0V)

Parameter	Symbol	Conditions	V_{CC} < 4.5V		V_{CC} ≥ 4.5V		Unit
			Min	Max	Min	Max	
SCS↑→SCK↑setup time	t_{CSSI}	Internal shift clock operation	(*1)-20	(*1)+0	(*1)-20	(*1)+0	ns
SCK↓→SCS↓ hold time	t_{CSHI}		(*2)+0	(*2)+20	(*2)+0	(*2)+20	ns
SCS deselect time	t_{CSDI}		(*3)-20 +5t_{CYCP}	(*3)+20 +5t_{CYCP}	(*3)-20 +5t_{CYCP}	(*3)+20 +5t_{CYCP}	ns
SCS↑→SCK↑setup time	t_{CSSE}	External shift clock operation	3t_{CYCP}+15	-	3t_{CYCP}+15	-	ns
SCK↓→SCS↓ hold time	t_{CSHE}		0	-	0	-	ns
SCS deselect time	t_{CSDE}		3t_{CYCP}+15	-	3t_{CYCP}+15	-	ns
SCS↑→SOT delay time	t_{DSE}		-	25	-	25	ns
SCS↓→SOT delay time	t_{DEE}		0	-	0	-	ns

(*1): CSSU bit value×serial chip select timing operating clock cycle [ns]

(*2): CSHD bit value×serial chip select timing operating clock cycle [ns]

(*3): CSDS bit value×serial chip select timing operating clock cycle [ns]

Notes:

- t_{CYCP} indicates the APB bus clock cycle time.
  About the APB bus number which UART is connected to, see "Block Diagram" in this data sheet.
- About CSSU, CSHD, CSDS, serial chip select timing operating clock, see "FM4 Family Peripheral Manual".
- When the external load capacitance CL = 30pF.

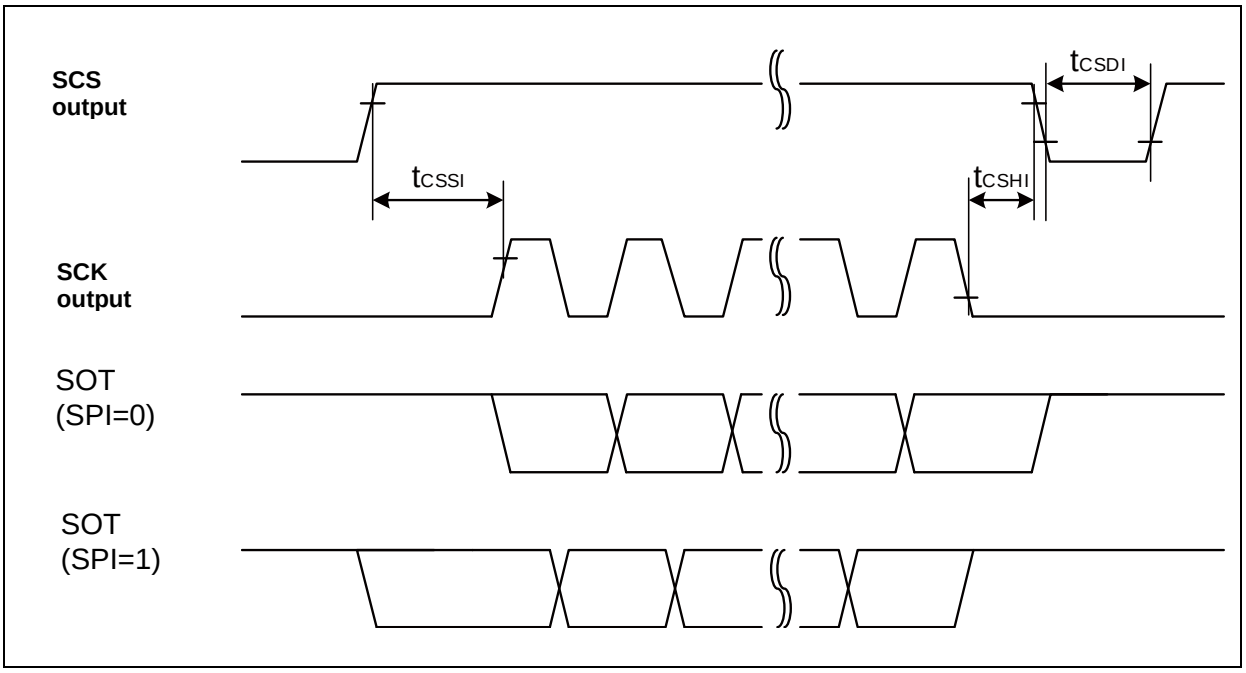
SCS
output
tCSDI
tCSSI
tCSHI
SCK
output
SOT
(SPI=0)
SOT
(SPI=1)

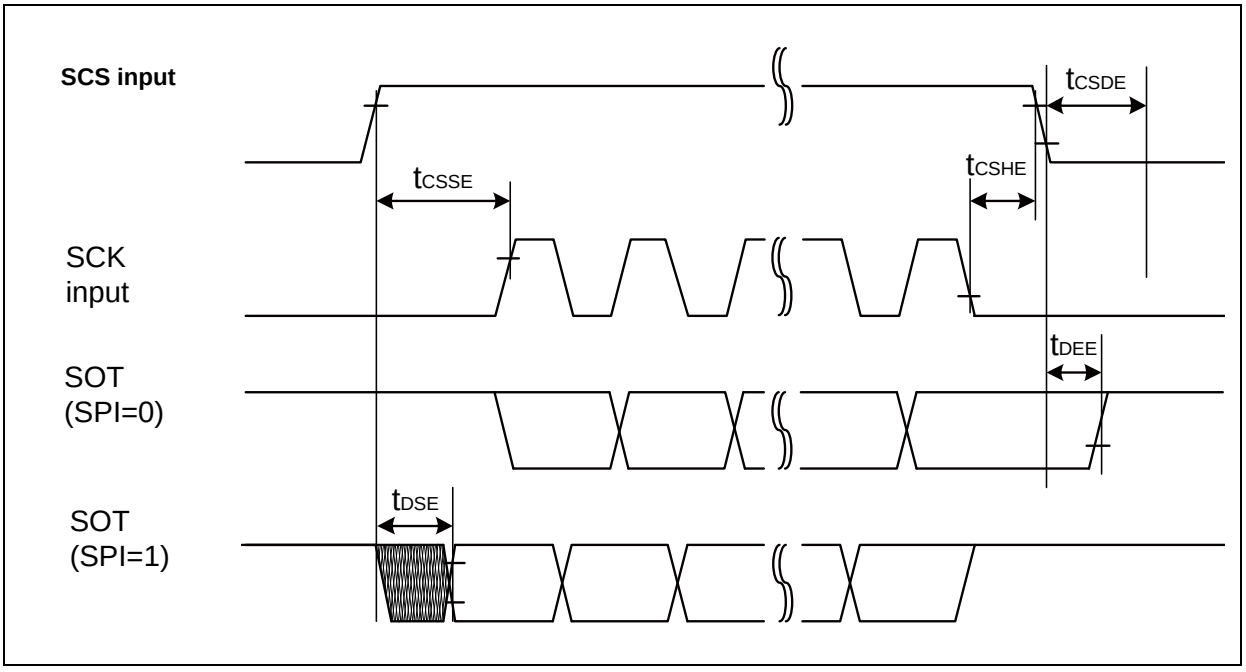
SCS input
tCSDE
tCSSE
tCSHE
SCK
input
tDEE
SOT
(SPI=0)
tDSE
SOT
(SPI=1)

■External clock (EXT = 1) : when in asynchronous mode only

(V_{CC} = 2.7V to 5.5V, V_{SS} = 0V)

Parameter	Symbol	Condition	Value		Unit	Remarks
			Min	Max		
Serial clock "L" pulse width	t_{SLSH}	C_L = 30pF	t_{CYCP} + 10	-	ns	
Serial clock "H" pulse width	t_{SHSL}		t_{CYCP} + 10	-	ns	
SCK falling time	tF		-	5	ns	
SCK rising time	tR		-	5	ns	

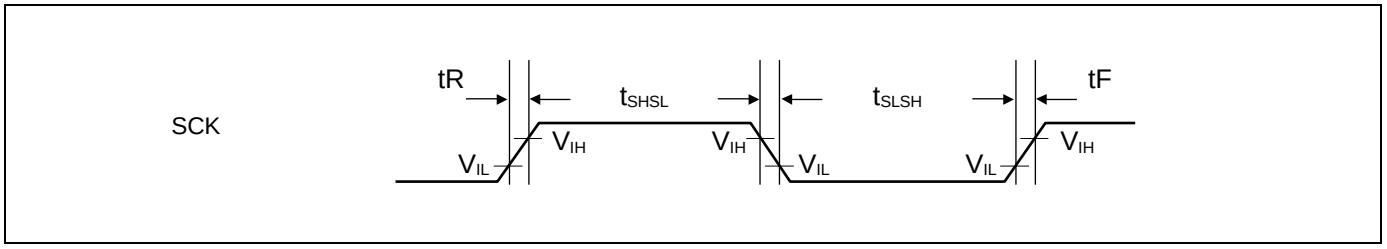

11.4.12 External Input Timing

(V_{CC} = 2.7V to 5.5V, V_{SS} = 0V)

Parameter	Symbol	Pin name	Conditions	Value		Unit	Remarks
				Min	Max		
Input pulse width	t_{INH}, t_{INL}	ADTG	-	$2t_{CYCP}$*1	-	ns	A/D converter trigger input
		FRCKx					Free-run timer input clock
		ICxx					Input capture
		DTTIxX	-	$2t_{CYCP}$*1	-	ns	Waveform generator
		INT00 to INT31, NMIX	-	$2t_{CYCP}$ + 100*1	-	ns	External interrupt, NMI
				500*2	-	ns	
		WKUPx	-	500*3	-	ns	Deep standby wake up

*1: t_{CYCP} indicates the APB bus clock cycle time except stop when in STOP mode, in timer mode.
About the APB bus number which the A/D converter, Multi-function Timer, External interrupt are connected to, see "Block Diagram" in this data sheet.

*2: When in STOP mode, in timer mode.

*3: When in deep standby RTC mode, in deep standby STOP mode.

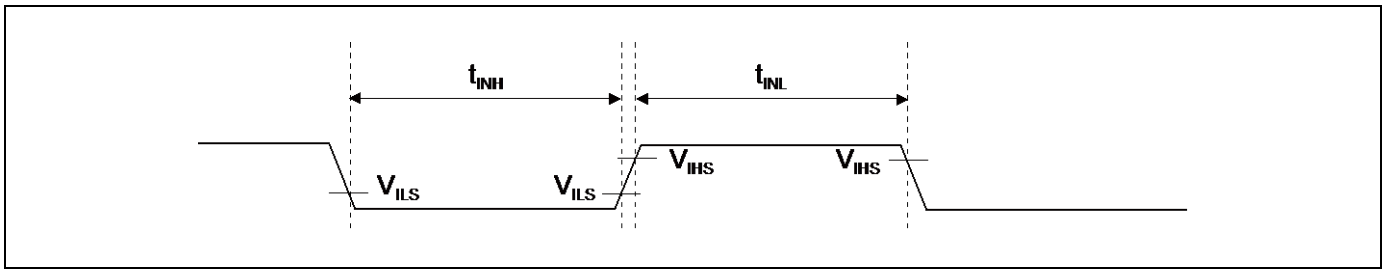

11.4.13 Quadrature Position/Revolution Counter Timing

(V_{CC} = 2.7V to 5.5V, V_{SS} = 0V)

Parameter	Symbol	Conditions	Value		Unit
			Min	Max	
AIN pin "H" width	t_{AHL}	-	$2t_{CYCP}$*	-	ns
AIN pin "L" width	t_{ALL}	-			
BIN pin "H" width	t_{BHL}	-			
BIN pin "L" width	t_{BLL}	-			
BIN rising time from AIN pin "H" level	t_{AUBU}	PC_Mode2 or PC_Mode3			
AIN falling time from BIN pin "H" level	t_{BUAD}	PC_Mode2 or PC_Mode3			
BIN falling time from AIN pin "L" level	t_{ADBD}	PC_Mode2 or PC_Mode3			
AIN rising time from BIN pin "L" level	t_{BDAU}	PC_Mode2 or PC_Mode3			
AIN rising time from BIN pin "H" level	t_{BUAU}	PC_Mode2 or PC_Mode3			
BIN falling time from AIN pin "H" level	t_{AUBD}	PC_Mode2 or PC_Mode3			
AIN falling time from BIN pin "L" level	t_{BDAD}	PC_Mode2 or PC_Mode3			
BIN rising time from AIN pin "L" level	t_{ADBU}	PC_Mode2 or PC_Mode3			
ZIN pin "H" width	t_{ZHL}	QCR:CGSC="0"			
ZIN pin "L" width	t_{ZLL}	QCR:CGSC="0"			
AIN/BIN rising and falling time from determined ZIN level	t_{ZABE}	QCR:CGSC="1"			
Determined ZIN level from AIN/BIN rising and falling time	t_{ABEZ}	QCR:CGSC="1"			

* : t_{CYCP} indicates the APB bus clock cycle time except stop when in STOP mode, in timer mode.
About the APB bus number which Quadrature Position/Revolution Counter is connected to, see “Block Diagram” in this data sheet.

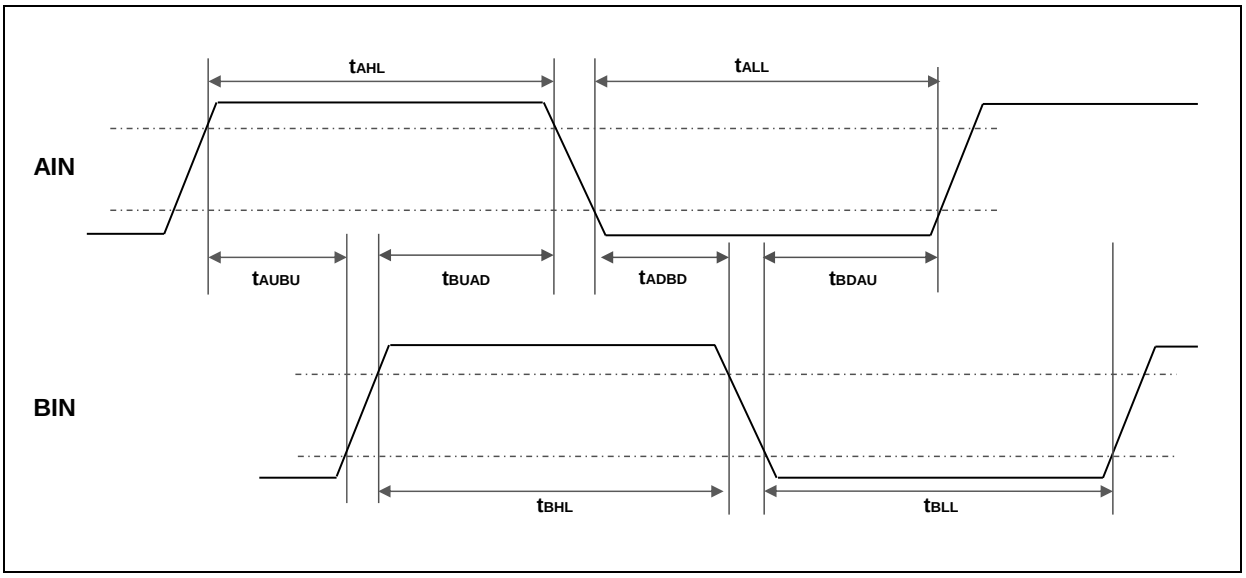

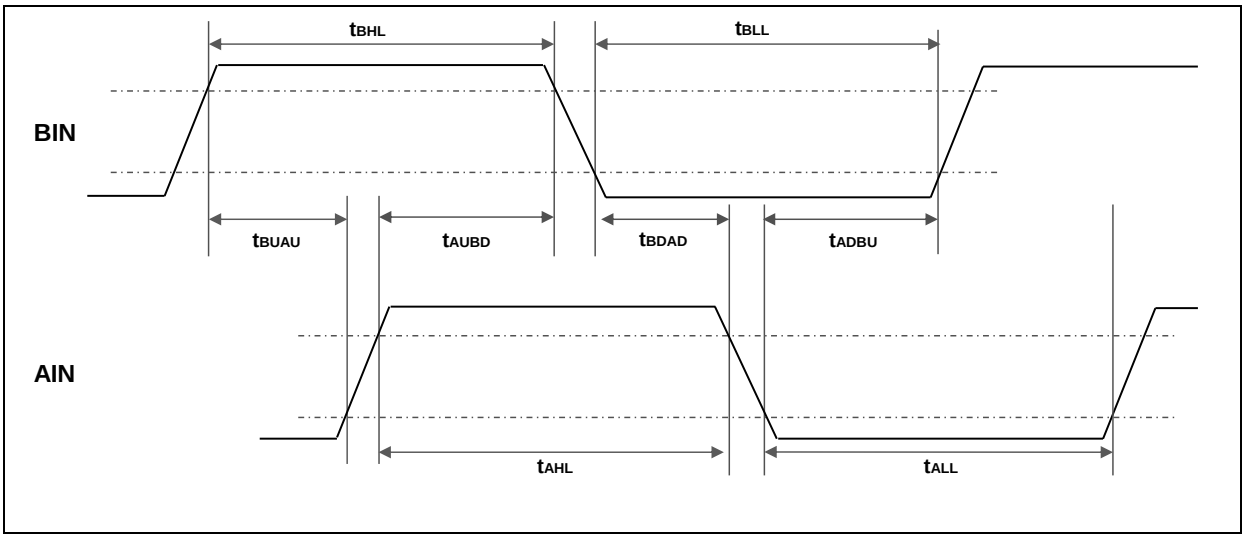
tBHL
tBLL
BIN
tBUAU
tAUBD
tBDAD
tADBU
AIN
tAHL
tALL

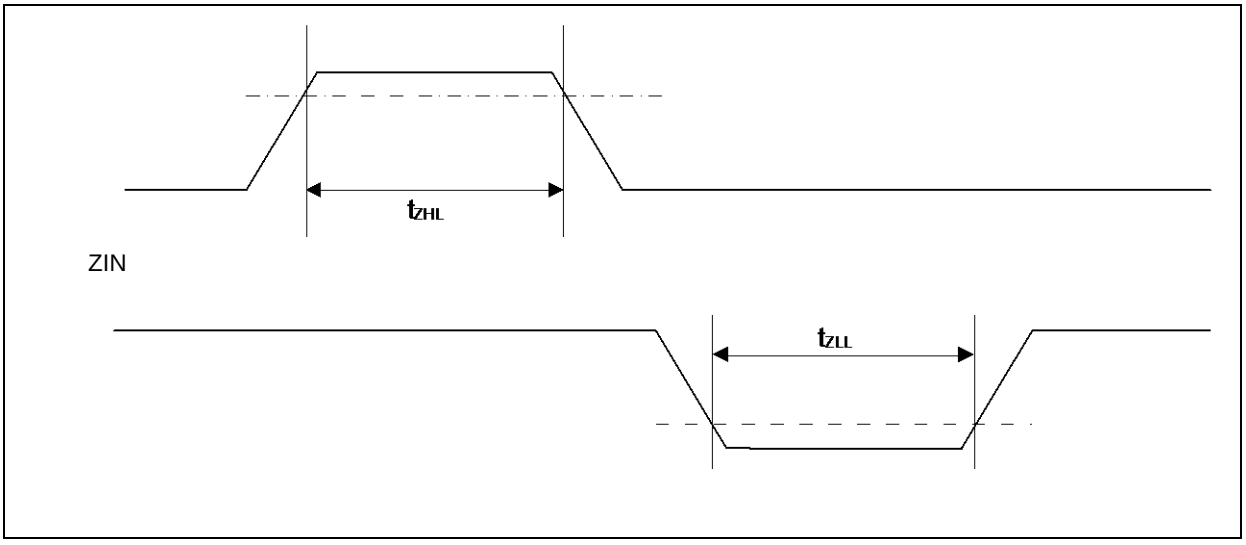
tZHL
ZIN
tZLL

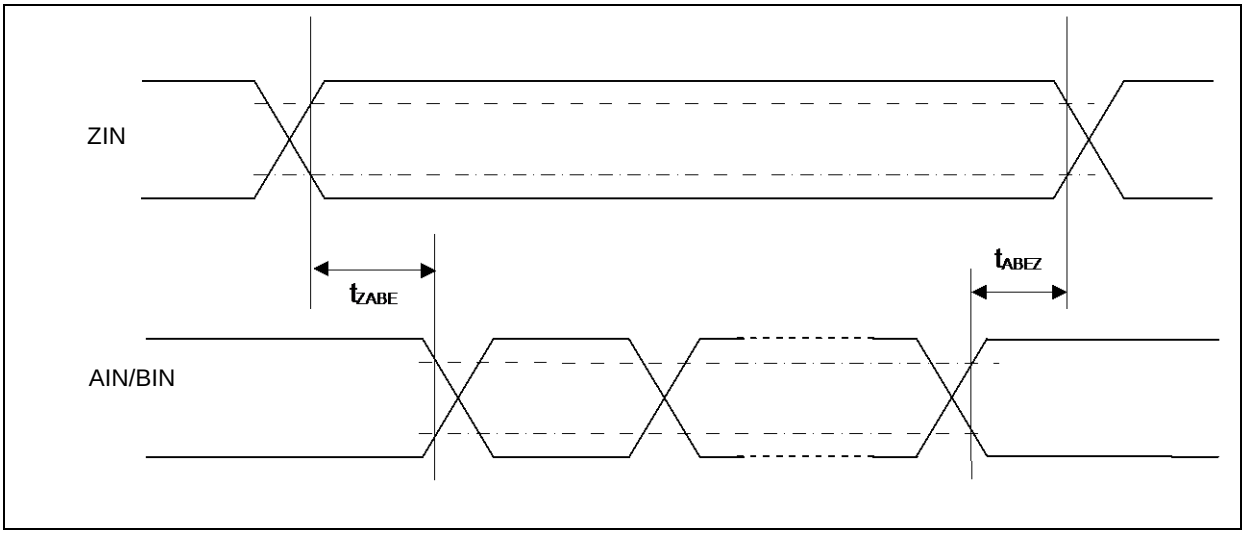
ZIN
tZABE
tABEZ
AIN/BIN

11.4.14 I^2C Timing

■Typical mode, high-speed mode

(V_{CC} = 2.7V to 5.5V, V_{SS} = 0V)

Parameter	Symbol	Conditions	Typical mode		High-speed mode		Unit	Remarks
			Min	Max	Min	Max		
SCL clock frequency	F_{SCL}	C_L = 30pF, R = (Vp/I_{OL})*1	0	100	0	400	kHz	
(Repeated) START condition hold time SDA ↓ → SCL ↓	t_{HDSTA}		4.0	-	0.6	-	µs	
SCL clock "L" width	t_{LOW}		4.7	-	1.3	-	µs	
SCL clock "H" width	t_{HIGH}		4.0	-	0.6	-	µs	
(Repeated) START condition setup time SCL ↑ → SDA ↓	t_{SUSTA}		4.7	-	0.6	-	µs	
Data hold time SCL ↓ → SDA ↓ ↑	t_{HDDAT}		0	3.45*2	0	0.9*3	µs	
Data setup time SDA ↓ ↑ → SCL ↑	t_{SUDAT}		250	-	100	-	ns	
STOP condition setup time SCL ↑ → SDA ↑	t_{SUSTO}		4.0	-	0.6	-	µs	
Bus free time between "STOP condition" and "START condition"	t_{BUF}		4.7	-	1.3	-	µs	
Noise filter	t_{SP}	2MHz ≤ t_{CYCP}<40MHz	$2t_{CYCP}$*4	-	$2t_{CYCP}$*4	-	ns	*5
		40MHz ≤ t_{CYCP}<60MHz	$4t_{CYCP}$*4	-	$4t_{CYCP}$*4	-	ns	
		60MHz ≤ t_{CYCP}<80MHz	$6t_{CYCP}$*4	-	$6t_{CYCP}$*4	-	ns	
		80MHz ≤ t_{CYCP}<100MHz	$8t_{CYCP}$*4	-	$8t_{CYCP}$*4	-	ns	
		100MHz ≤ t_{CYCP}<120MHz	$10t_{CYCP}$*4	-	$10t_{CYCP}$*4	-	ns	
		120MHz ≤ t_{CYCP}<140MHz	$12t_{CYCP}$*4	-	$12t_{CYCP}$*4	-	ns	
		140MHz ≤ t_{CYCP}<160MHz	$14t_{CYCP}$*4	-	$14t_{CYCP}$*4	-	ns	
		160MHz ≤ t_{CYCP}<180MHz	$16t_{CYCP}$*4	-	$16t_{CYCP}$*4	-	ns	

*1 : R and C_L represent the pull-up resistance and load capacitance of the SCL and SDA lines, respectively. Vp indicates the power supply voltage of the pull-up resistance and I_{OL} indicates V_{OL} guaranteed current.

*2 : The maximum t_{HDDAT} must satisfy that it does not extend at least "L" period (t_{LOW}) of device's SCL signal.

*3 : A high-speed mode I^2C bus device can be used on a typical mode I^2C bus system as long as the device satisfies the requirement of "t_{SUDAT} ≥ 250 ns".

*4 : t_{CYCP} is the APB bus clock cycle time.
About the APB bus number that I^2C is connected to, see "Block Diagram" in this data sheet.

*5 : The noise filter time can be changed by register settings.
Change the number of the noise filter steps according to APB bus clock frequency.

■Fast mode plus (Fm+)

(V_{CC} = 2.7V to 5.5V, V_{SS} = 0V)

Parameter	Symbol	Conditions	Fast mode plus (Fm+)*6		Unit	Remarks
			Min	Max		
SCL clock frequency	F_{SCL}	C_L = 30pF, R = (Vp/I_{OL})*1	0	1000	kHz	
(Repeated) START condition hold time SDA ↓ → SCL ↓	t_{HDSTA}		0.26	-	µs	
SCL clock "L" width	t_{LOW}		0.5	-	µs	
SCL clock "H" width	t_{HIGH}		0.26	-	µs	
SCL clock frequency	t_{SUSTA}		0.26	-	µs	
(Repeated) START condition hold time SDA ↓ → SCL ↓	t_{HDDAT}		0	0.45*2, *3	µs	
Data setup time SDA ↓ ↑ → SCL ↑	t_{SUDAT}		50	-	ns	
STOP condition setup time SCL ↑ → SDA ↑	t_{SUSTO}		0.26	-	µs	
Bus free time between "STOP condition" and "START condition"	t_{BUF}		0.5	-	µs	
Noise filter	t_{SP}	60MHz ≤ t_{CYCP}<80MHz	6 t_{CYCP}*4	-	ns	*5
		80MHz ≤ t_{CYCP}<100MHz	8 t_{CYCP}*4	-	ns	
		100MHz ≤ t_{CYCP}<120MHz	10 t_{CYCP}*4	-	ns	
		120MHz ≤ t_{CYCP}<140MHz	12 t_{CYCP}*4	-	ns	
		140MHz ≤ t_{CYCP}<160MHz	14 t_{CYCP}*4	-	ns	
		160MHz ≤ t_{CYCP}<180MHz	16 t_{CYCP}*4	-	ns	

*1 : R and C_L represent the pull-up resistance and load capacitance of the SCL and SDA lines, respectively. Vp indicates the power supply voltage of the pull-up resistance and I_{OL} indicates V_{OL} guaranteed current.

*2 : The maximum t_{HDDAT} must satisfy that it does not extend at least "L" period (t_{LOW}) of device's SCL signal.

*3 : A high-speed mode I^2C bus device can be used on a typical mode I^2C bus system as long as the device satisfies the requirement of "t_{SUDAT} ≥ 250 ns".

*4 : t_{CYCP} is the APB bus clock cycle time.
About the APB bus number that I^2C is connected to, see "Block Diagram" in this data sheet.
To use fast mode plus (Fm+), set the peripheral bus clock at 64 MHz or more.

*5 : The noise filter time can be changed by register settings.
Change the number of the noise filter steps according to APB bus clock frequency.

*6 : When using fast mode plus (Fm+), set the I/O pin to the mode corresponding to I^2C Fm+ in the EPFR register.
See "Chapter: I/O Port" in "FM4 Family Peripheral Manual" for the details.

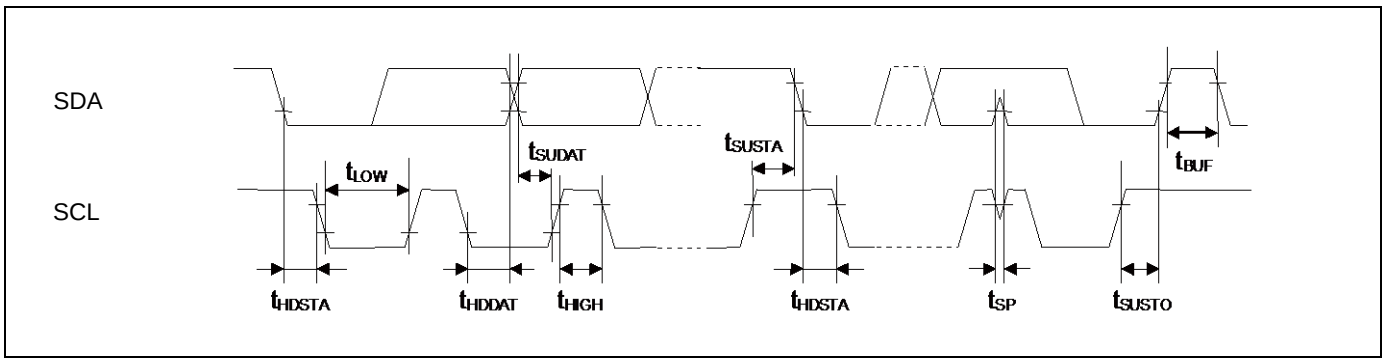
SDA
SCL
tLOW
tSUDAT
tSUSTA
tBUF
tHDSTA
tHDDAT
tHIGH
tHDSTA
tSP
tSUSTO

11.4.15 SD Card Interface Timing

■Default-Speed Mode

• Clock CLK (All values are referred to V_{IH} and V_{IL})

(V_{CC} = 2.7V to 3.6V, V_{SS} = 0V)

Parameter	Symbol	Pin name	Conditions	Value		Remarks
				Min	Max	
Clock frequency Data Transfer Mode	f_{PP}	S_CLK	C_{CARD} ≤ 10pF (1card)	0	16	MHz
Clock frequency Identification Mode	f_{OD}	S_CLK		0*/100	400	kHz
Clock low time	t_{WL}	S_CLK		10	-	ns
Clock high time	t_{WH}	S_CLK		10	-	ns
Clock rising time	t_{TLH}	S_CLK		-	10	ns
Clock falling time	t_{THL}	S_CLK		-	10	ns

*: 0Hz means to stop the clock. The given minimum frequency range is for cases were continues clock is required.

• Card Inputs CMD, DAT (referenced to Clock CLK)

Parameter	Symbol	Pin name	Conditions	Value		Remarks
				Min	Max	
Input set-up time	t_{ISU}	S_CMD, S_DATA3:0	C_{CARD} ≤ 10pF (1card)	5	-	ns
Input hold time	t_{IH}	S_CMD, S_DATA3:0		5	-	ns

• Card Outputs CMD, DAT (referenced to Clock CLK)

Parameter	Symbol	Pin name	Conditions	Value		Remarks
				Min	Max	
Output Delay time during Data Transfer Mode	t_{ODLY}	S_CMD, S_DATA3:0	C_{CARD} ≤ 40pF (1card)	0	22	ns
Output Delay time durinn Identification Mode	t_{ODLY}	S_CMD, S_DATA3:0		0	50	ns

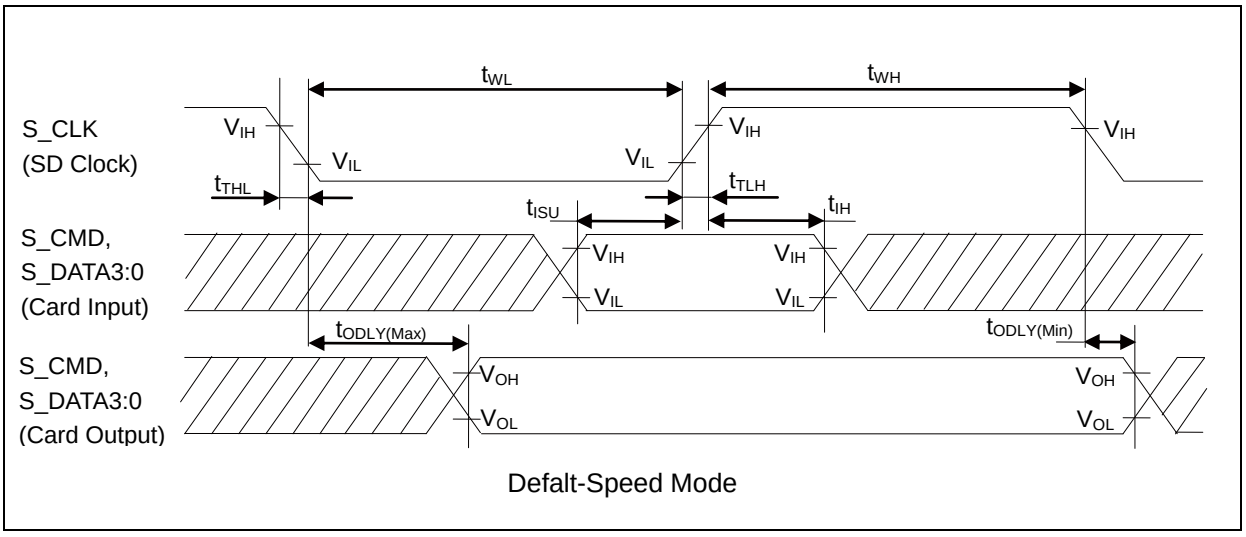

Defalt-Speed Mode

Note: The Card Input corresponds to the Host Output and the Card Output corresponds to the Host Input because this model is the Host.

■High-Speed Mode

- Clock CLK (All values are referred to V_{IH} and V_{IL})

(V_{CC} = 2.7V to 3.6V, V_{SS} = 0V)

Parameter	Symbol	Pin name	Conditions	Value		Remarks
				Min	Max	
Clock frequency Data Transfer Mode	f_{PP}	S_CLK	C_{CARD} ≤ 10pF (1card)	0	32	MHz
Clock low time	t_{WL}	S_CLK		7	-	ns
Clock high time	t_{WH}	S_CLK		7	-	ns
Clock rising time	t_{TLH}	S_CLK		-	3	ns
Clock falling time	t_{THL}	S_CLK		-	3	ns

- Card Inputs CMD, DAT (referenced to Clock CLK)

Parameter	Symbol	Pin name	Conditions	Value		Remarks
				Min	Max	
Input set-up time	t_{ISU}	S_CMD, S_DATA3:0	C_{CARD} ≤ 10pF (1card)	8	-	ns
Input hold time	t_{IH}	S_CMD, S_DATA3:0		2	-	ns

- Card Outputs CMD, DAT (referenced to Clock CLK)

Parameter	Symbol	Pin name	Conditions	Value		Remarks
				Min	Max	
Output Delay time during Data Transfer Mode	t_{ODLY}	S_CMD, S_DATA3:0	C_L ≤ 40pF (1card)	-	22	ns
Output Hold time	t_{OH}	S_CMD, S_DATA3:0	C_L ≥ 15pF (1card)	2.5	-	ns
Total System capacitance for each line*	C_L	-	1card	-	40	pF

*: In order to satisfy severe timing, host shall drive only one card.

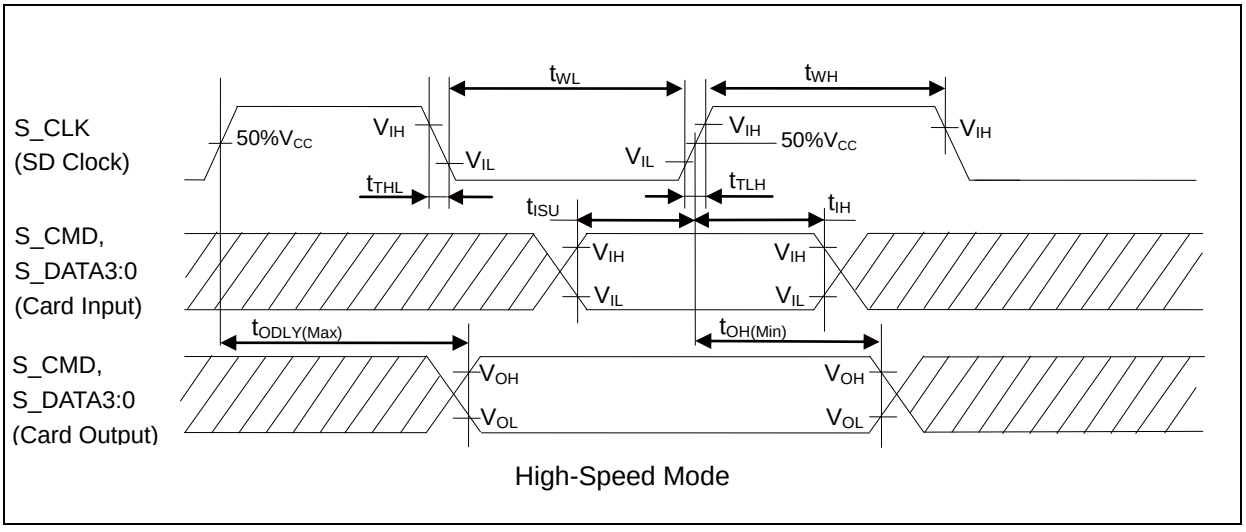

High-Speed Mode

Notes:

- The Card Input corresponds to the Host Output and the Card Output corresponds to the Host Input because this model is the Host.
- In high-speed mode, set the Clock frequency (f_{PP}) and the AHB Bus Clock frequency to the same values.

11.4.16 ETM Timing

(V_{CC} = 2.7V to 5.5V, V_{SS} = 0V)

Parameter	Symbol	Pin name	Conditions	Value		Unit	Remarks
				Min	Max		
Data hold	t_{ETMH}	TRACECLK, TRACED[3:0]	$V_{CC} \geq 4.5V$	2	9	ns	
			$V_{CC} < 4.5V$	2	15		
TRACECLK frequency	1/ t_{TRACE}	TRACECLK	$V_{CC} \geq 4.5V$	-	50	MHz	
			$V_{CC} < 4.5V$	-	32	MHz	
TRACECLK clock cycle	t_{TRACE}		$V_{CC} \geq 4.5V$	20	-	ns	
			$V_{CC} < 4.5V$	31.25	-	ns	

Note: When the external load capacitance C_L= 30pF.

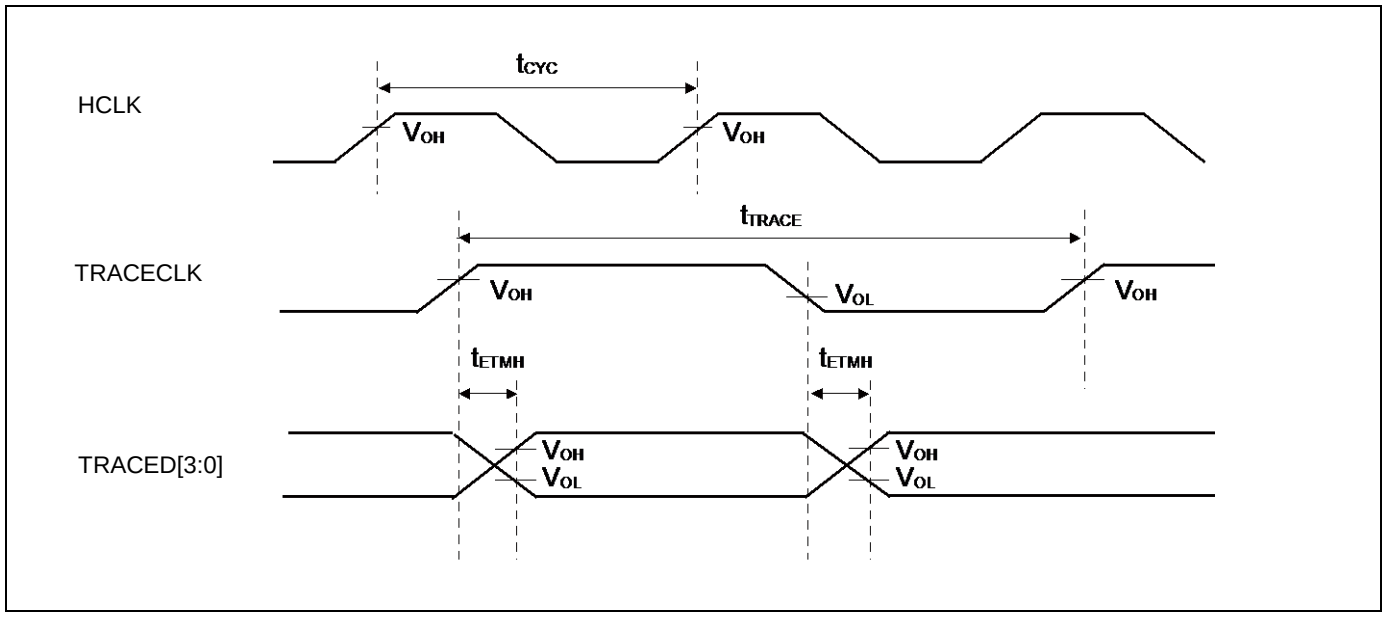

11.4.17 JTAG Timing

(V_{CC} = 2.7V to 5.5V, V_{SS} = 0V)

Parameter	Symbol	Pin name	Conditions	Value		Unit	Remarks
				Min	Max		
TMS, TDI setup time	t_{JTAGS}	TCK, TMS, TDI	$V_{CC} \geq 4.5V$	15	-	ns	
			$V_{CC} < 4.5V$				
TMS, TDI hold time	t_{JTAGH}	TCK, TMS, TDI	$V_{CC} \geq 4.5V$	15	-	ns	
			$V_{CC} < 4.5V$				
TDO delay time	t_{JTAGD}	TCK, TDO	$V_{CC} \geq 4.5V$	-	25	ns	
			$V_{CC} < 4.5V$	-	45		

Note: When the external load capacitance C_L= 30pF.

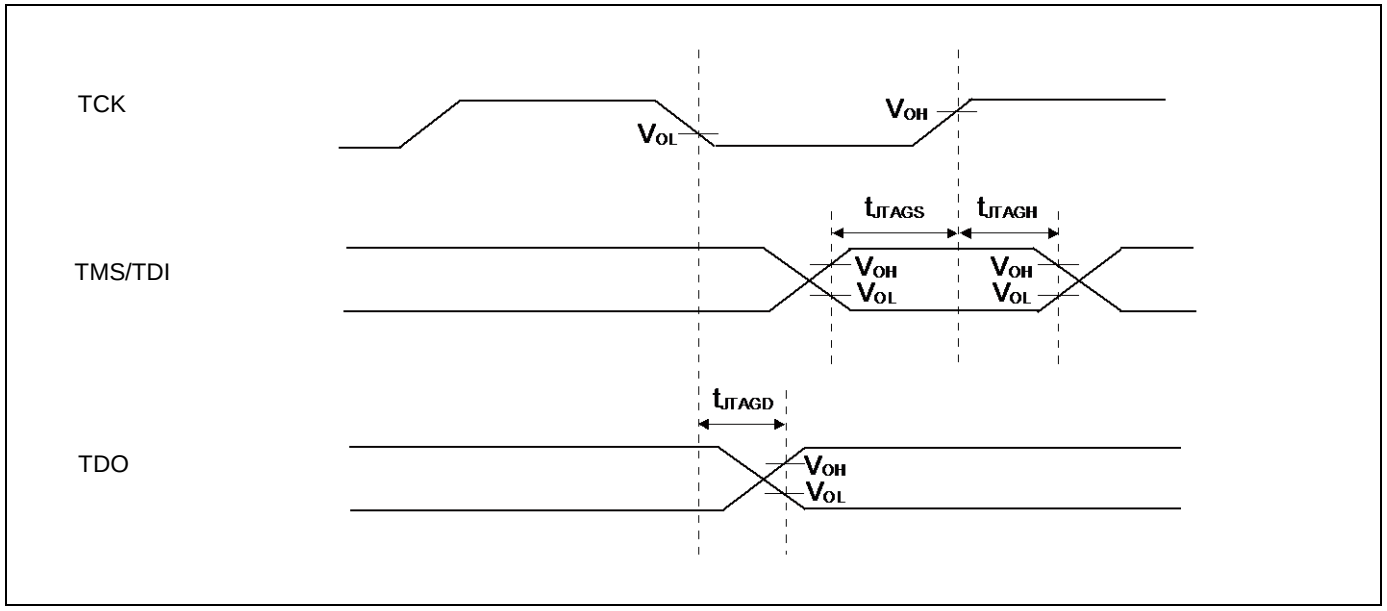

11.5 12-bit A/D Converter

■Electrical Characteristics for the A/D Converter

(V_{CC} = AV_{CC} = 2.7V to 5.5V, V_{SS} = AV_{SS} = AVRL = 0V)

Parameter	Symbol	Pin name	Value			Unit	Remarks
			Min	Typ	Max		
Resolution	-	-	-	-	12	bit	
Integral Nonlinearity	-	-	- 4.5	-	+ 4.5	LSB	AVRH = 2.7V to 5.5V
Differential Nonlinearity	-	-	-2.5	-	+ 2.5	LSB	
Zero transition voltage	V_{ZT}	AN00 to AN23	- 15	-	+ 15	mV	
Full-scale transition voltage	V_{FST}	AN00 to AN23	AVRH - 15	-	AVRH + 15	mV	
Conversion time	-	-	0.5*1	-	-	µs	AV_{CC} ≥ 4.5V
Sampling time	Ts	-	*2	-	10	µs	AV_{CC} ≥ 4.5V
			*2	-			AV_{CC} < 4.5V
Compare clock cycle*3	Tcck	-	25	-	1000	ns	AV_{CC} ≥ 4.5V
			50	-	1000		AV_{CC} < 4.5V
State transition time to operation permission	Tstt	-	1.0	-	-	µs	
Power supply current (analog + digital)	-	AVCC	-	0.69	0.92	mA	A/D 1unit operation
			-	1.0	18	µA	When A/D stop
Reference power supply current (between AVRH and AVSS)	-	AVRH	-	1.1	1.97	mA	A/D 1unit operation AVRH=5.5V
				0.3	6.3	µA	When A/D stop
Analog input capacity	C_{AIN}	-	-	-	12.05	pF	
Analog input resistance	R_{AIN}	-	-	-	1.2	kΩ	AV_{CC} ≥ 4.5V
					1.8		AV_{CC} < 4.5V
Interchannel disparity	-	-	-	-	4	LSB	
Analog port input current	-	AN00 to AN23	-	-	5	µA	
Analog input voltage	-	AN00 to AN23	AV_{SS}	-	AVRH	V	
Reference voltage	-	AVRH	2.7	-	AV_{CC}	V	

*1: The conversion time is the value of sampling time (Ts) + compare time (Tc).
The condition of the minimum conversion time is when the value of sampling time: 150ns, the value of compare time: 350ns (AV_{CC} ≥ 4.5V). Ensure that it satisfies the value of sampling time (Ts) and compare clock cycle (Tcck). For setting*4 of sampling time and compare clock cycle, see "Chapter: A/D Converter" in "FM4 Family Peripheral Manual Analog Macro Part". The register setting of the A/D Converter is reflected by the peripheral clock timing. The sampling and compare clock are set at Base clock (HCLK).

*2: A necessary sampling time changes by external impedance. Ensure that it set the sampling time to satisfy (Equation 1).

*3: The compare time (Tc) is the value of (Equation 2).

*4: The register setting of the A/D Converter is reflected by the timing of the APB bus clock. The sampling clock and compare clock are set in base clock (HCLK). About the APB bus number which the A/D Converter is connected to, see "Block Diagram" in this data sheet.

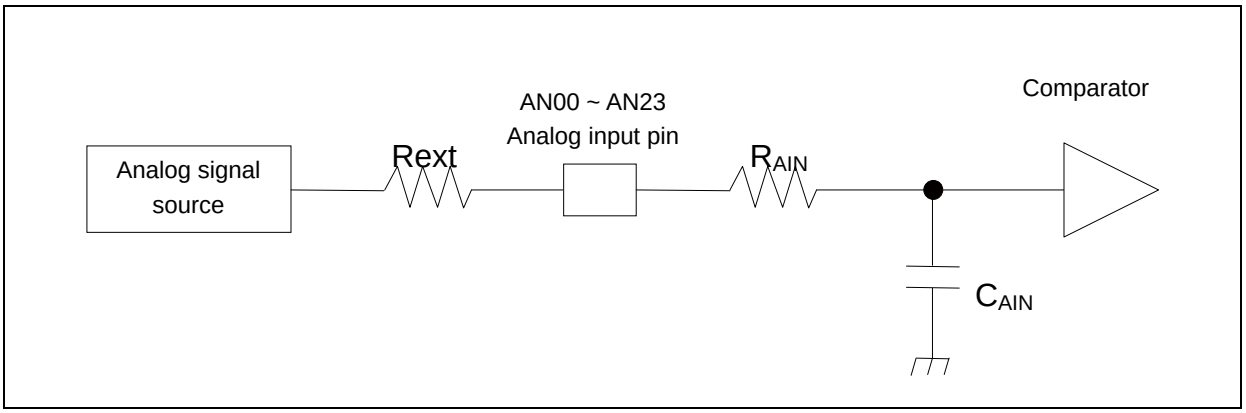

(Equation 1) $Ts \geq (R_{AIN} + Rext) \times C_{AIN} \times 9$

Ts : Sampling time

R_{AIN} : Input resistance of A/D = 1.2kΩ at 4.5V $\leq AV_{CC} \leq$ 5.5V

Input resistance of A/D = 1.8kΩ at 2.7V $\leq AV_{CC} \leq$ 4.5V

C_{AIN} : Input capacity of A/D = 12.05pF at 2.7V $\leq AV_{CC} \leq$ 5.5V

Rext : Output impedance of external circuit

(Equation 2) $Tc = Tcck \times 14$

Tc : Compare time

Tcck : Compare clock cycle

■Definition of 12-bit A/D Converter Terms

- Resolution : Analog variation that is recognized by an A/D converter.
- Integral Nonlinearity : Deviation of the line between the zero-transition point (0b000000000000 ⟷ 0b000000000001) and the full-scale transition point (0b111111111110 ⟷ 0b111111111111) from the actual conversion characteristics.
- Differential Nonlinearity : Deviation from the ideal value of the input voltage that is required to change the output code by 1 LSB.

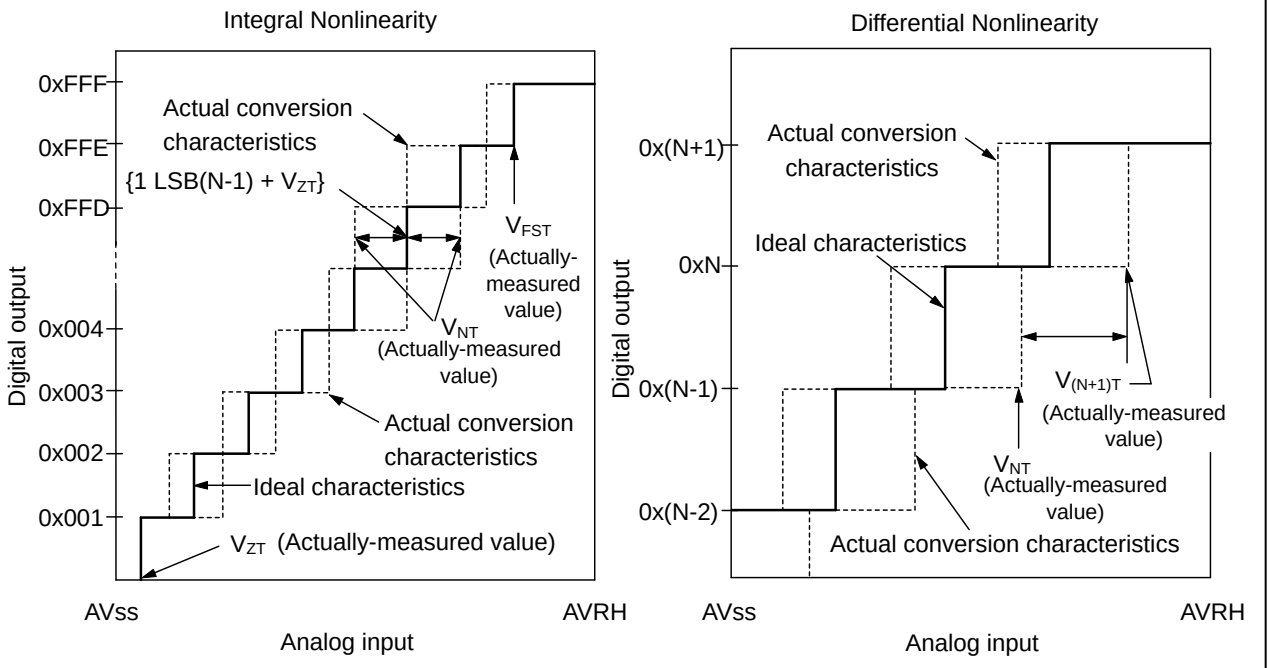

$$\text{Integral Nonlinearity of digital output N} = \frac{V_{NT} - \{1LSB \times (N - 1) + V_{ZT}\}}{1LSB} \text{ [LSB]}$$

$$\text{Differential Nonlinearity of digital output N} = \frac{V_{(N+1)T} - V_{NT}}{1LSB} - 1 \text{ [LSB]}$$

$$1LSB = \frac{V_{FST} - V_{ZT}}{4094}$$

N : A/D converter digital output value.
V_{ZT} : Voltage at which the digital output changes from 0x000 to 0x001.
V_{FST} : Voltage at which the digital output changes from 0xFFE to 0xFFF.
V_{NT} : Voltage at which the digital output changes from 0x(N − 1) to 0xN.

11.6 12-bit D/A Converter

■Electrical Characteristics for the D/A Converter

(V_{CC} = AV_{CC} = 2.7Vto5.5V, V_{SS} = AV_{SS} = 0V)

Parameter	Symbol	Pin name	Value			Unit	Remarks
			Min	Typ	Max		
Resolution	-	DAx	-	-	12	bit	
Integral Nonlinearity*	INL		- 16	-	+ 16	LSB	
Differential Nonlinearity*	DNL		- 0.98	-	+ 1.5	LSB	
Output voltage offset	V_{OFF}		-	-	10.0	mV	When setting 0x000
			- 20.0	-	+ 1.4	mV	When setting 0xFFF
Analog output impedance	R_O		3.10	3.80	4.50	kΩ	D/A operation
			2.0	-	-	MΩ	When D/A stop
Power supply current*	IDDA	AVCC	260	330	410	μA	D/A 1unit operation AV_{CC}=3.3V
			400	510	620	μA	D/A 1unit operation AV_{CC}=5.0V
	IDSA		-	-	14	μA	When D/A stop

*: During no load

11.7 Low-Voltage Detection Characteristics

11.7.1 Low-Voltage Detection Reset

Parameter	Symbol	Conditions	Value			Unit	Remarks
			Min	Typ	Max		
Detected voltage	VDL	-	2.25	2.45	2.65	V	When voltage drops
Released voltage	VDH	-	2.30	2.50	2.70	V	When voltage rises

11.7.2 Interrupt of Low-Voltage Detection

Parameter	Symbol	Conditions	Value			Unit	Remarks
			Min	Typ	Max		
Detected voltage	VDL	SVHI = 00111	2.58	2.8	3.02	V	When voltage drops
Released voltage	VDH		2.67	2.9	3.13	V	When voltage rises
Detected voltage	VDL	SVHI = 00100	2.76	3.0	3.24	V	When voltage drops
Released voltage	VDH		2.85	3.1	3.34	V	When voltage rises
Detected voltage	VDL	SVHI = 01100	2.94	3.2	3.45	V	When voltage drops
Released voltage	VDH		3.04	3.3	3.56	V	When voltage rises
Detected voltage	VDL	SVHI = 01111	3.31	3.6	3.88	V	When voltage drops
Released voltage	VDH		3.40	3.7	3.99	V	When voltage rises
Detected voltage	VDL	SVHI = 01110	3.40	3.7	3.99	V	When voltage drops
Released voltage	VDH		3.50	3.8	4.10	V	When voltage rises
Detected voltage	VDL	SVHI = 01001	3.68	4.0	4.32	V	When voltage drops
Released voltage	VDH		3.77	4.1	4.42	V	When voltage rises
Detected voltage	VDL	SVHI = 01000	3.77	4.1	4.42	V	When voltage drops
Released voltage	VDH		3.86	4.2	4.53	V	When voltage rises
Detected voltage	VDL	SVHI = 11000	3.86	4.2	4.53	V	When voltage drops
Released voltage	VDH		3.96	4.3	4.64	V	When voltage rises
LVD stabilization wait time	T_{LVDW}	-	-	-	4480× t_{CYCP}*	µs	

*: t_{CYCP} indicates the APB2 bus clock cycle time.

11.8 MainFlash Memory Write/Erase Characteristics

(V_{CC} = 2.7V to 5.5V)

Parameter		Value			Unit	Remarks
		Min	Typ	Max		
Sector erase time	Large Sector	-	0.7	3.7	s	Includes write time prior to internal erase
	Small Sector		0.3	1.1		
Half word (16-bit) write time	Write cycles ≤ 100 times	-	12	100	µs	Not including system-level overhead time
	Write cycles > 100 times			200		
Chip erase time		-	13.6	68	s	Includes write time prior to internal erase

Write cycles and data hold time

Erase/Write cycles (cycle)	Data hold time (year)
1,000	20 *
10,000	10 *
100,000	5 *

* : This value comes from the technology qualification (using Arrhenius equation to translate high temperature acceleration test result into average temperature value at + 85°C) .

11.9 WorkFlash Memory Write/Erase Characteristics

(V_{CC} = 2.7V to 5.5V)

Parameter	Value			Unit	Remarks
	Min	Typ	Max		
Sector erase time	-	0.3	1.5	s	Includes write time prior to internal erase
Half word (16-bit) write time	-	20	200	µs	Not including system-level overhead time
Chip erase time	-	1.2	6	s	Includes write time prior to internal erase

Write cycles and data hold time

Erase/Write cycles (cycle)	Data hold time (year)
1,000	20 *
10,000	10 *
100,000	5 *

* : This value comes from the technology qualification (using Arrhenius equation to translate high temperature acceleration test result into average temperature value at + 85°C) .

11.10Standby Recovery Time

11.10.1 Recovery cause: Interrupt/WKUP

The time from recovery cause reception of the internal circuit to the program operation start is shown.

■Recovery count time

(V_{CC} = 2.7V to 5.5V, V_{SS} = 0V)

Parameter	Symbol	Value		Unit	Remarks
		Typ	Max*		
Sleep mode	Ticnt	HCLK×1		µs	
High-speed CR Timer mode Main Timer mode PLL Timer mode		40	80	µs	
Low-speed CR timer mode		450	900	µs	
Sub timer mode		881	1136	µs	
RTC mode stop mode (High-speed CR /Main/PLL run mode return)		270	581	µs	
RTC mode stop mode (Low-speed CR/sub run mode return)		240	480		
Deep standby RTC mode with RAM retention Deep standby stop mode with RAM retention		308	667	µs	without RAM retention
		308	667	µs	with RAM retention

*: The maximum value depends on the built-in CR accuracy.

■Example of standby recovery operation (when in external interrupt recovery*)

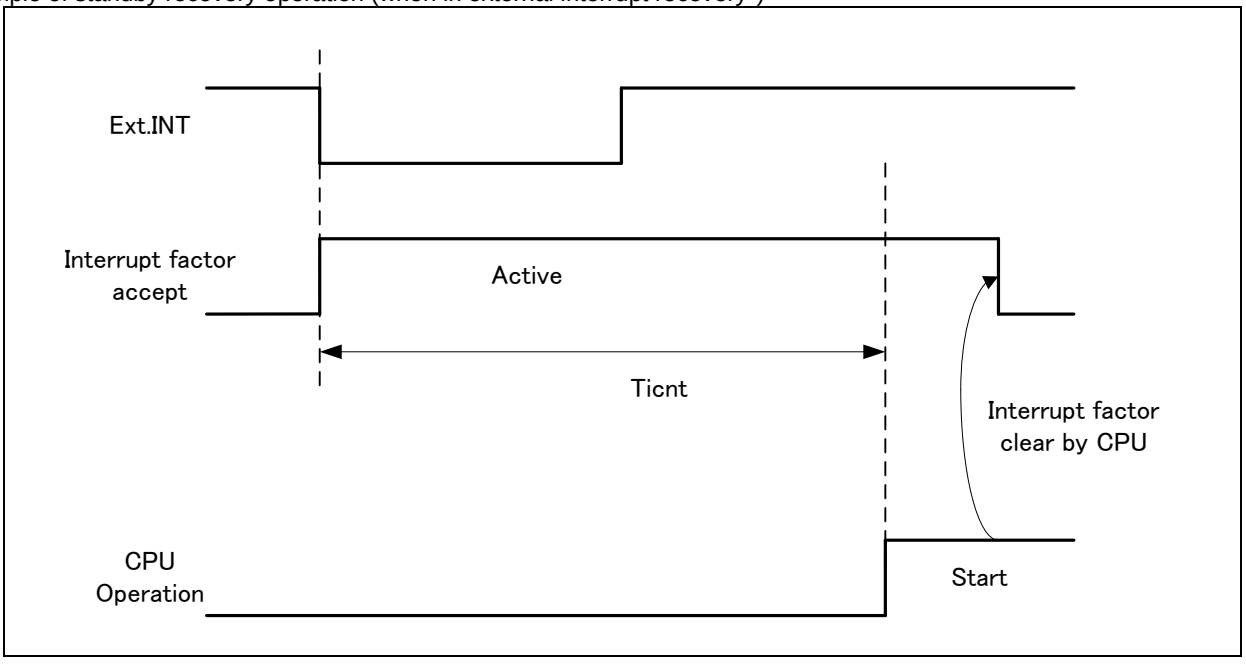

*: External interrupt is set to detecting fall edge.

■Example of standby recovery operation (when in internal resource interrupt recovery*)

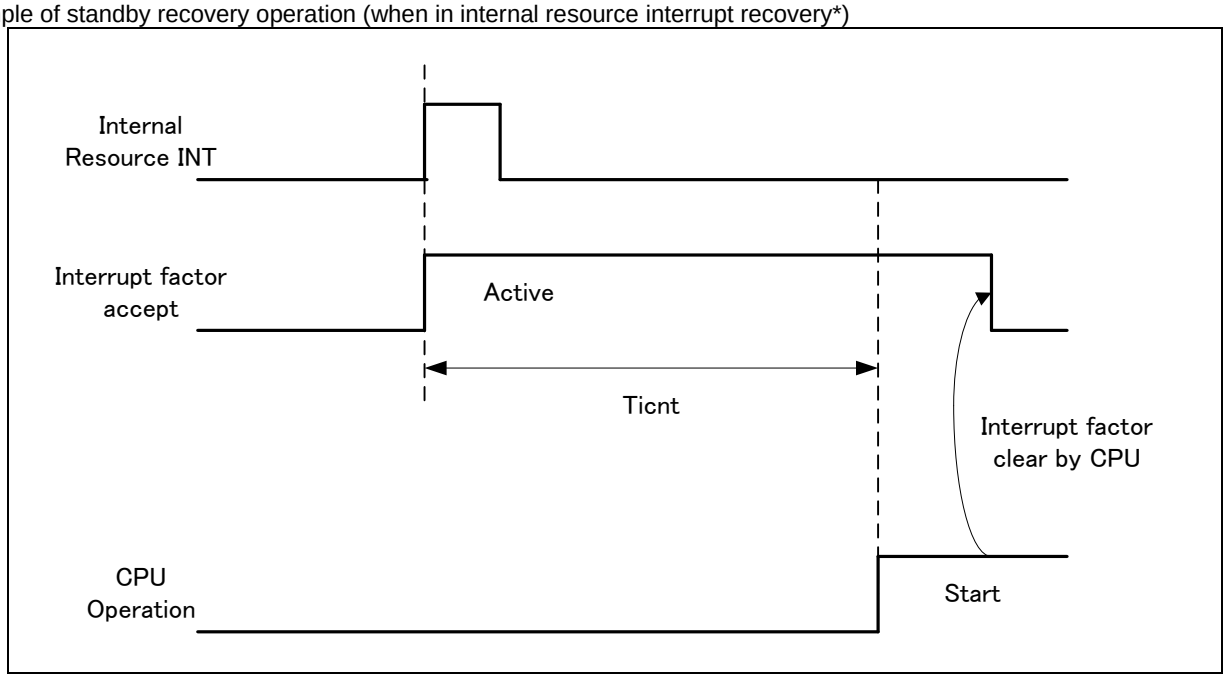

*: Depending on the standby mode, interrupt from the internal resource is not included in the recovery cause.

Notes:

- The return factor is different in each Low-Power consumption modes. See "Chapter: Low Power Consumption Mode" and "Operations of Standby Modes" in FM4 Family Peripheral Manual.
- When interrupt recoveries, the operation mode that CPU recoveries depends on the state before the Low-Power consumption mode transition. See "Chapter: Low Power Consumption Mode" in "FM4 Family Peripheral Manual".

11.10.2 Recovery cause: Reset

The time from reset release to the program operation start is shown.

■Recovery count time

(V_{CC} = 2.7V to 5.5V, V_{SS} = 0V)

Parameter	Symbol	Value		Unit	Remarks
		Typ	Max*		
Sleep mode	Trcnt	111	267	µs	
High-speed CR Timer mode Main Timer mode PLL Timer mode		111	267	µs	
Low-speed CR timer mode		258	569	µs	
Sub timer mode		258	569	µs	
RTC mode stop mode		258	569	µs	
Deep standby RTC mode with RAM retention Deep standby stop mode with RAM retention		308	669	µs	without RAM retention
				µs	with RAM retention

*: The maximum value depends on the built-in CR accuracy.

■Example of standby recovery operation (when in INITX recovery)

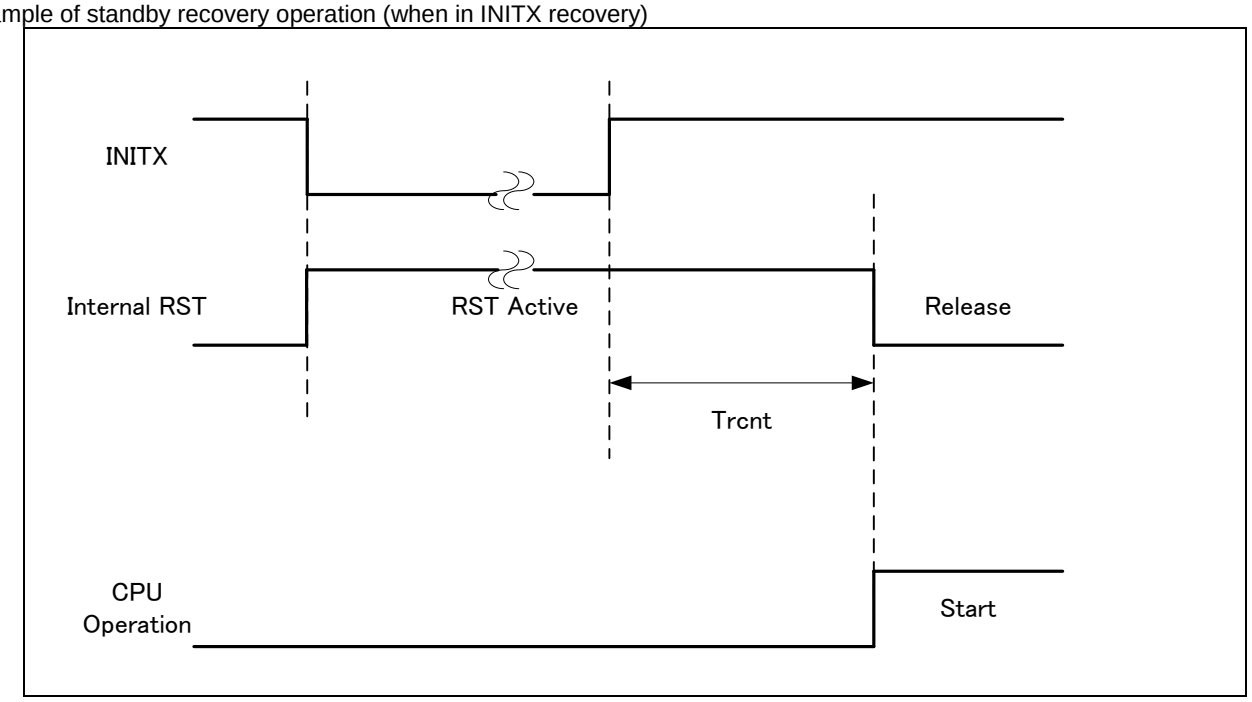

■Example of standby recovery operation (when in internal resource reset recovery*)

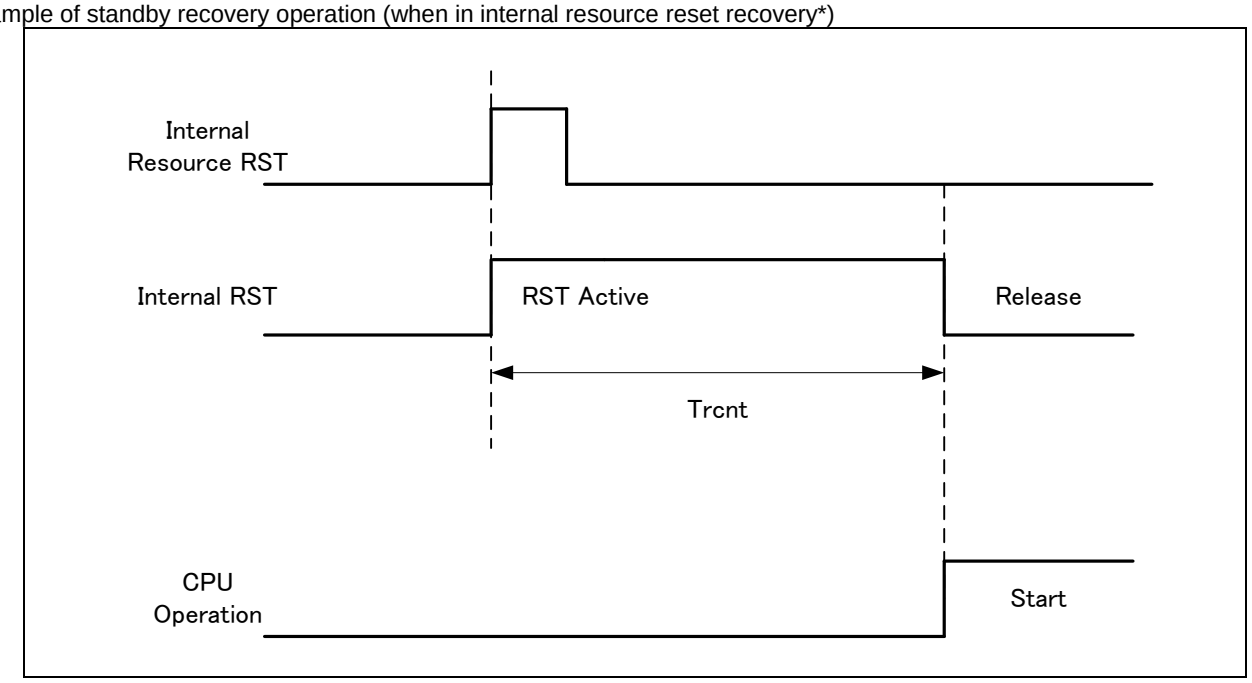

*: Depending on the standby mode, the reset issue from the internal resource is not included in the recovery cause.

Notes:

- The return factor is different in each Low-Power consumption modes. See "Chapter: Low Power Consumption Mode" and "Operations of Standby Modes" in FM4 Family Peripheral Manual.
- The time during the power-on reset/low-voltage detection reset is excluded to the recovery source. See "11.4.6 Power-on Reset Timing" in "11.4. AC Characteristics" in "Electrical Characteristics" for the detail on the time during the power-on reset/low-voltage detection reset.
- When in recovery from reset, CPU changes to the high-speed CR run mode. When using the main clock or the PLL clock, it is necessary to add the main clock oscillation stabilization wait time or the main PLL clock stabilization wait time.
- The internal resource reset means the watchdog reset and the CSV reset.

12. Ordering Information

Part number	Package
MB9BF468MPMC	Plastic・LQFP (0.5mm pitch), 80 pin (FPT-80P-M37)
MB9BF467MPMC	
MB9BF466MPMC	
MB9BF468MPMC1	Plastic・LQFP (0.65mm pitch), 80 pin (FPT-80P-M40)
MB9BF467MPMC1	
MB9BF466MPMC1	
MB9BF468NPMC	Plastic・LQFP (0.5mm pitch), 100 pin (FPT-100P-M23)
MB9BF467NPMC	
MB9BF466NPMC	
MB9BF468RPMC	Plastic・LQFP (0.5mm pitch), 120 pin (FPT-120P-M37)
MB9BF467RPMC	
MB9BF466RPMC	
MB9BF468NBGL	Plastic・PFBGA (0.5mm pitch), 112 pin (BGA-112P-M05)
MB9BF467NBGL	
MB9BF466NBGL	
MB9BF468RBGL	Plastic・PFBGA (0.5mm pitch), 144 pin (BGA-144P-M09)
MB9BF467RBGL	
MB9BF466RBGL	
MB9BF468NPQC	Plastic・QFP (0.65mm pitch), 100 pin (FPT-100P-M36)
MB9BF467NPQC	
MB9BF466NPQC	

13. Package Dimensions

120-pin plastic LQFP		
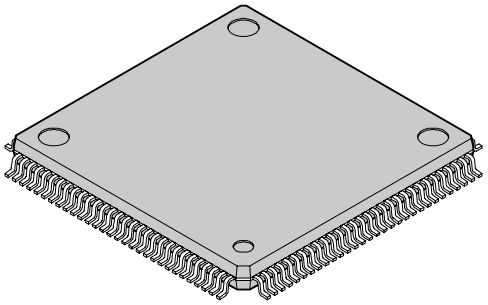	Lead pitch	0.50 mm
	Package width × package length	16.0 mm × 16.0 mm
	Lead shape	Gullwing
	Sealing method	Plastic mold
	Mounting height	1.70 mm Max
	Weight	0.88 g
(FPT-120P-M37)	Code (Reference)	P-LFQFP120-16 × 16-0.50

120-pin plastic LQFP
(FPT-120P-M37)

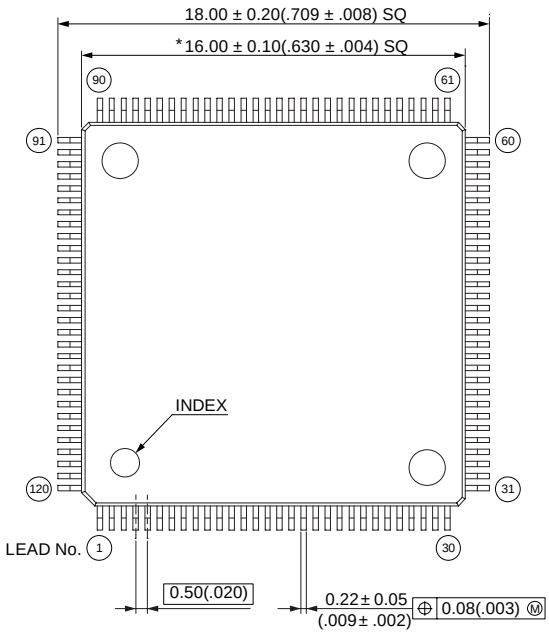

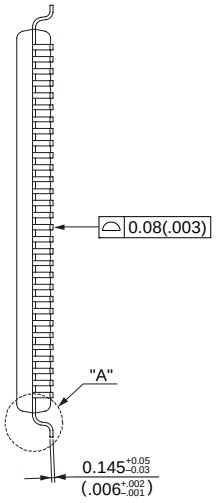

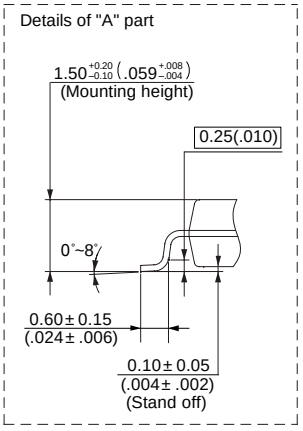

Note 1) * : These dimensions do not include resin protrusion.
Note 2) Pins width and pins thickness include plating thickness.
Note 3) Pins width do not include tie bar cutting remainder.

© 2010 FUJITSU SEMICONDUCTOR LIMITED F120037Sc(1)-1-1

Dimensions in mm (inches).
Note: The values in parentheses are reference values

100-pin plastic LQFP		
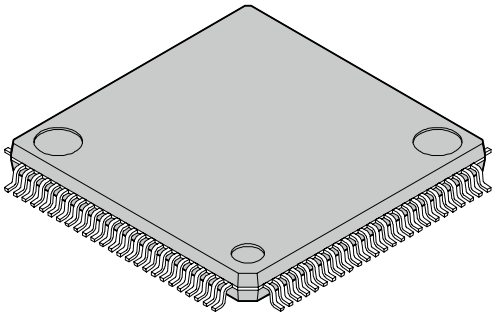 (FPT-100P-M23)	Lead pitch	0.50 mm
	Package width × package length	14.00 mm × 14.00 mm
	Lead shape	Gullwing
	Lead bend direction	Normal bend
	Sealing method	Plastic mold
	Mounting height	1.70 mm MAX
	Weight	0.65 g

100-pin plastic LQFP
(FPT-100P-M23)

Note 1) * : These dimensions do not include resin protrusion.
Note 2) Pins width and pins thickness include plating thickness.
Note 3) Pins width do not include tie bar cutting remainder.

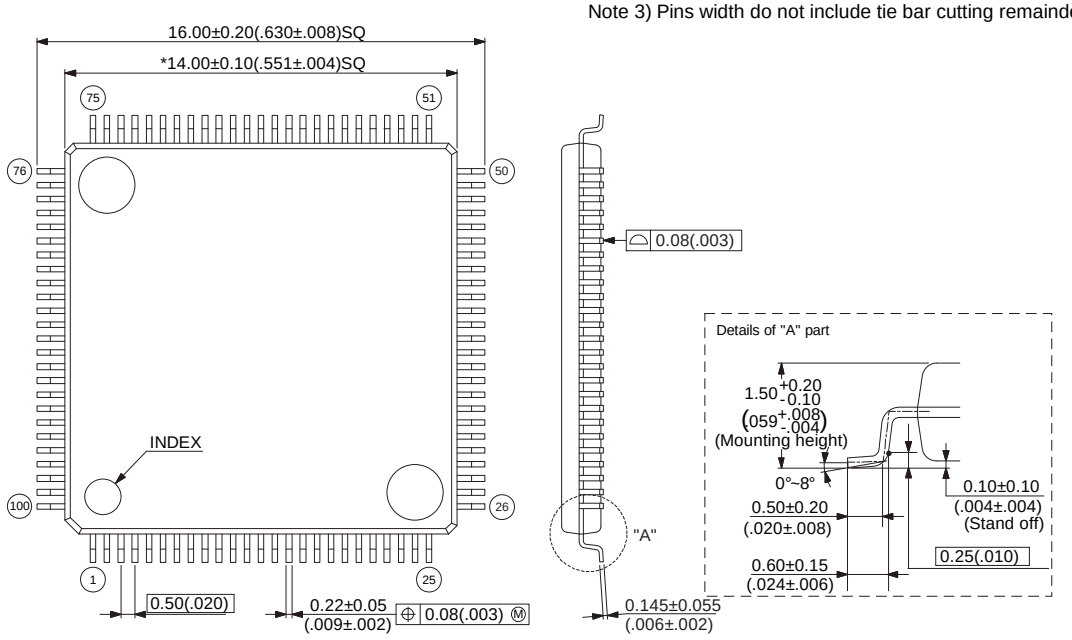

Dimensions in mm (inches).
Note:The values in parentheses are reference values.

ⓒ 2009-2010 FUJITSU SEMICONDUCTOR LIMITED F100034S-c-3-4

100-pin plastic QFP		
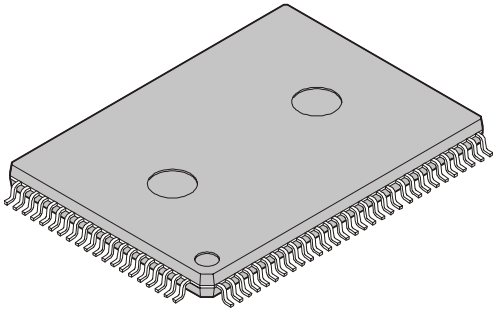 (FPT-100P-M36)	Lead pitch	0.65 mm
	Package width × package length	14.00 mm × 20.00 mm
	Lead shape	Gullwing
	Sealing method	Plastic mold
	Mounting height	3.35 mm MAX
	Code (Reference)	P-QFP100-14 × 20-0.65

100-pin plastic QFP
(FPT-100P-M36)

Note 1) * : These dimensions do not include resin protrusion.
Note 2) Pins width and pins thickness include plating thickness.
Note 3) Pins width do not include tie bar cutting remainder.

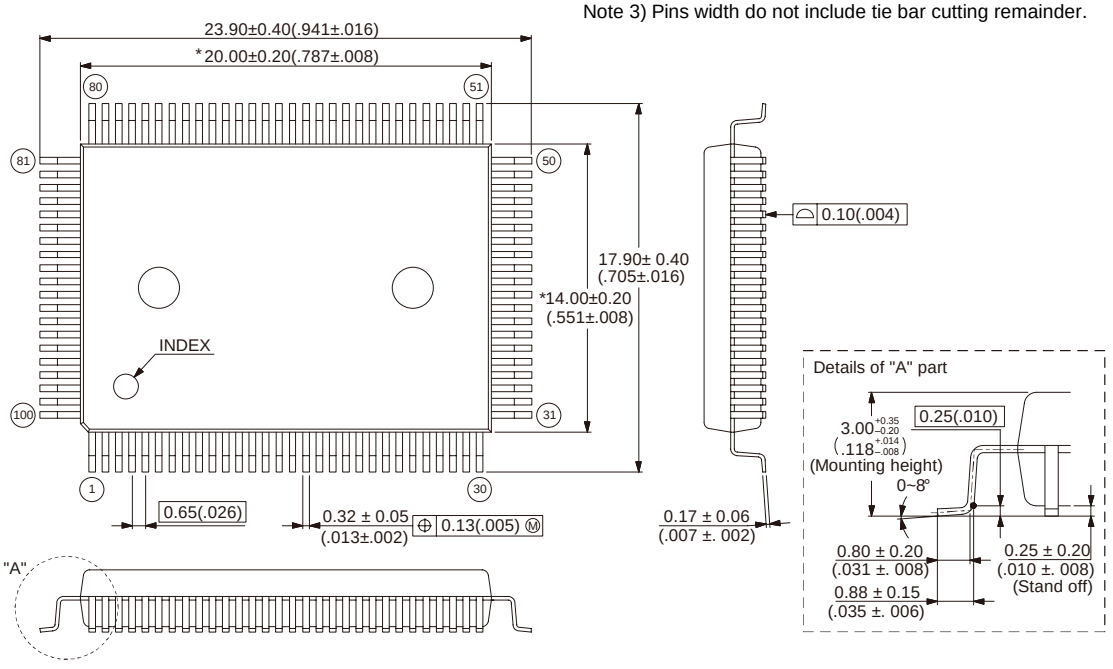

ⓒ 2011 FUJITSU SEMICONDUCTOR LIMITED HMbF100-36Sc-1-1

Dimensions in mm (inches).
Note: The valuesin parentheses are reference values.

80-pin plastic LQFP		
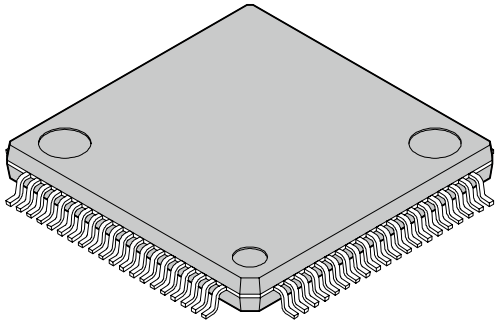 (FPT-80P-M37)	Lead pitch	0.50 mm
	Package width × package length	12.00 mm × 12.00 mm
	Lead shape	Gullwing
	Lead bend direction	Normal bend
	Sealing method	Plastic mold
	Mounting height	1.70 mm MAX
	Weight	0.47 g

80-pin plastic LQFP
(FPT-80P-M37)

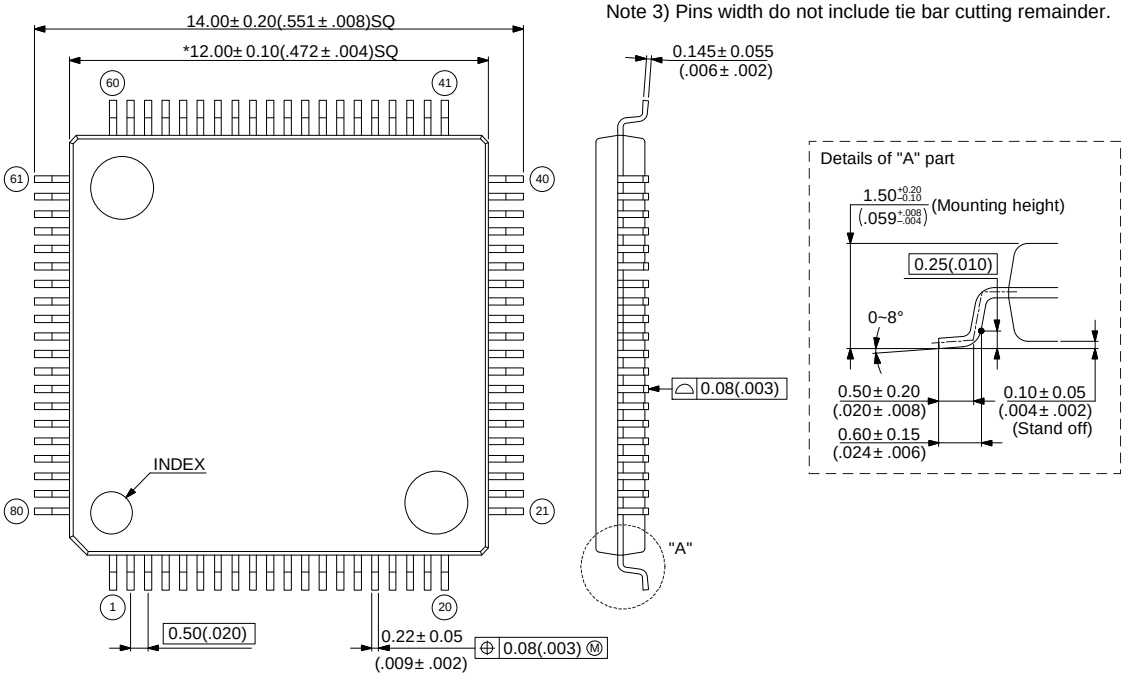

Note 1) * : These dimensions do not include resin protrusion.
Note 2) Pins width and pins thickness include plating thickness.
Note 3) Pins width do not include tie bar cutting remainder.

© 2009-2010 FUJITSU SEMICONDUCTOR LIMITED F80037S-c-1-2

Dimensions in mm (inches).
Note: The values in parentheses are reference values.

80-pin plastic LQFP		
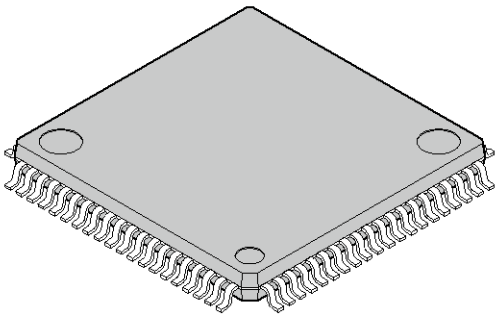	Lead pitch	0.65 mm
	Package width × package length	14.00 mm × 14.00 mm
	Lead shape	Gullwing
	Sealing method	Plastic mold
	Mounting height	1.60 mm Max.
	Code (Reference)	P-LQFP80-14 × 14-0.65
(FPT-80P-M40)		

80-pin plastic LQFP
(FPT-80P-M40)

Note 1) * : These dimensions do not include resin protrusion.
Note 2) Pins width and pins thickness include plating thickness.
Note 3) Pins width do not include tie bar cutting remainder.

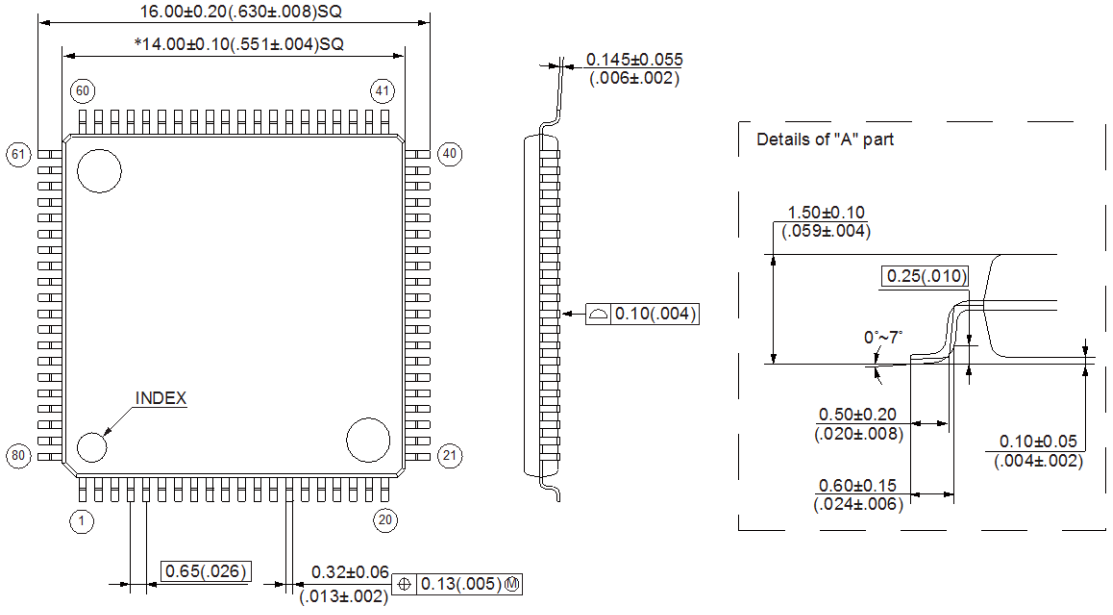

© 2012 FUJITSU SEMICONDUCTOR LIMITED HMbF80-40Sc-1-1

Dimensions in mm (inches).
Note: The values in parentheses are reference values.

112-ball plastic FBGA		
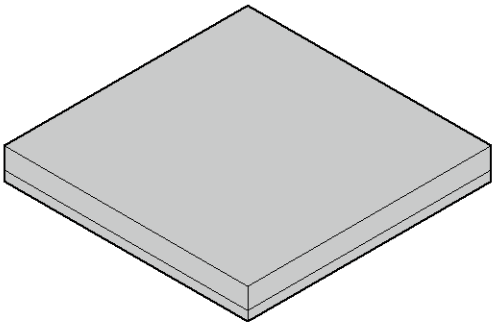 (BGA-112P-M05)	Ball pitch	0.50 mm
	Package width × package length	7.00 mm × 7.00 mm
	Lead shape	Ball
	Sealing method	Plastic mold
	Mounting height	1.35 mm Max.
	Weight	0.10 g

112-ball plastic FBGA
(BGA-112P-M05)

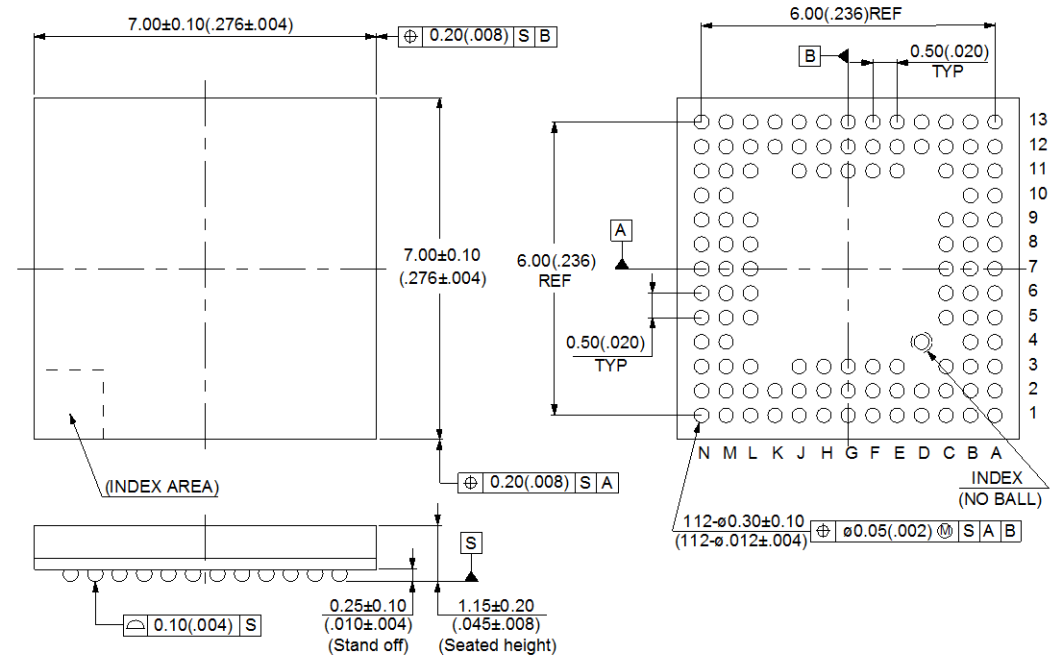

© 2008-2010 FUJITSU SEMICONDUCTOR LIMITED B112005S-c-2-3

Dimensions in mm (inches).
Note: The values in parentheses are reference values.

144-pin plastic FBGA		
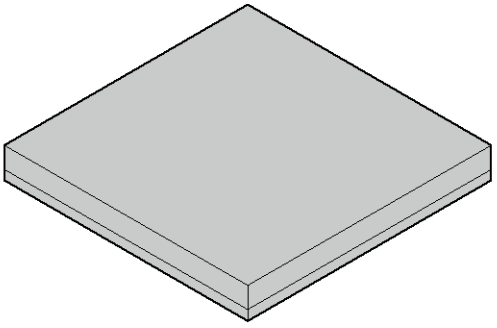 (BGA-144P-M09)	Lead pitch	0.5 mm
	Package width × package length	7.0 mm × 7.0 mm
	Sealing method	Plastic mold
	Mounting height	1.3 mm MAX
	Weight	0.11 g

144-pin plastic FBGA
(BGA-144P-M09)

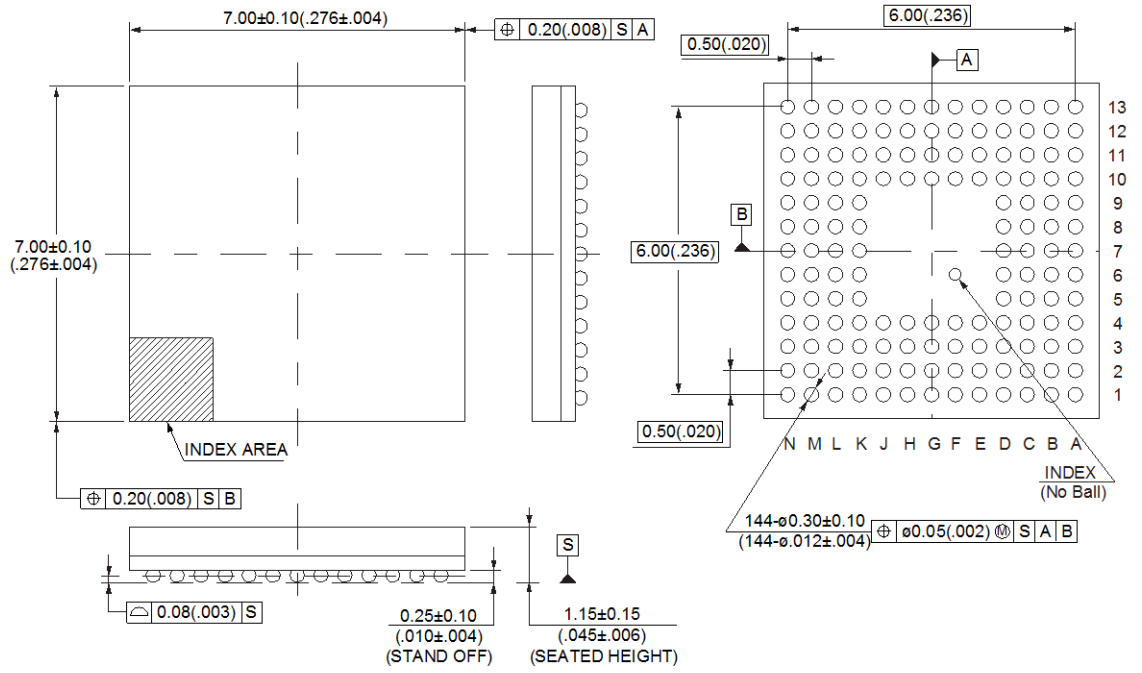

© 2010 FUJITSU SEMICONDUCTOR LIMITED HMbB144-09Sc-1-1

Dimensions in mm (inches).
Note: The values in parentheses are reference values.

14. Major Changes

Spansion Publication Number: DS709-00002-1v0-E

Page	Section	Change Results
-	-	Preliminary → Data Sheet
1	Description	Deleted the following description : The products which are described in this data sheet are placed into TYPE4 product categories in "FM4 Family Peripheral Manual".
3	Features Multi-Function Serial Interface [I^2C]	Revised the following description : Fast mode Plus (Fm+) (Max 1000 kbps, only for ch.3 and ch.7) supported →Fast mode Plus (Fm+) (Max 1000 kbps, only for ch.3=ch.A and ch.7=ch.B) supported
7	Features Unique Id	Added new section
9	Product Lineup Function	Added “Unique ID”
51, 52	I/O Circuit Type	Revised the remarks of “Type O, P, Q”
59	Handling Devices Handling When Using Debug Pins	Added new section
60	Block Diagram	Revised the block diagram
73	Electrical Characteristics 2. Recommended Operating Conditions	Revised “Table for package thermal resistance and maximum permissible power”
76 to 81	Electrical Characteristics 3. Dc Characteristics (1) Current Rating	• Revised the value of TBD • Revised the unit of “ICCHD”, “ICCRD”, “ICCVBAT” mA → µA • Added the note to “ICCVBAT”
86	Electrical Characteristics 4. Ac Characteristics (2) Sub Clock Input Characteristics	Revised the waveform chart
86	Electrical Characteristics 4. Ac Characteristics (3) Built-In Cr Oscillationcharacteristics	• Revised the value of TBD • Revised the table and the note of “Built-in High-speed CR”
145	Electrical Characteristics 5. 12-Bit A/D Converter ・Electrical Characteristics For The A/D Converter	• Revised the value of TBD • Revised the condition of the electrical characteristics table
148	Electrical Characteristics 6. 12-Bit D/A Converter ・Electrical Characteristics For The D/A Converter	• Revised the value of TBD • Revised the condition and Remarks of the electrical characteristics table
151	Electrical Characteristics 10. Standby Recovery Time (1) Recovery Cause: Interrupt/Wkup	• Revised the value of TBD • Revised the table of Recovery count time
153	Electrical Characteristics 10. Standby Recovery Time (2) Recovery Cause:Reset	• Revised the value of TBD • Revised the table of Recovery count time

NOTE: Please see “Document History” about later revised information.

Document History

Document Title: MB9B460R Series 32-Bit ARM® Cortex® - MF4, FM4 Microcontroller
Document Number: 002-04868

Revision	ECN	Orig. of Change	Submission Date	Description of Change
**	-	AKIH	06/27/2013	Migrated to Cypress and assigned document number 002-04868. No change to document contents or format.
*A	5157624	AKIH	03/03/2016	Updated to Cypress format.

Sales, Solutions, and Legal Information

Worldwide Sales and Design Support

Cypress maintains a worldwide network of offices, solution centers, manufacturer's representatives, and distributors. To find the office closest to you, visit us at Cypress Locations.

Products

ARM® Cortex® Microcontrollers	cypress.com/arm
Automotive	cypress.com/automotive
Clocks & Buffers	cypress.com/clocks
Interface	cypress.com/interface
Lighting & Power Control	cypress.com/powerpsoc
Memory	cypress.com/memory
PSoC	cypress.com/psoc
Touch Sensing	cypress.com/touch
USB Controllers	cypress.com/usb
Wireless/RF	cypress.com/wireless

PSoC® Solutions

psoc.cypress.com/solutions

PSoC 1 | PSoC 3 | PSoC 4 | PSoC 5LP

Cypress Developer Community

Community | Forums | Blogs | Video | Training

Technical Support

cypress.com/go/support

ARM and Cortex are the trademarks of ARM Limited in the EU and other countries.

© Cypress Semiconductor Corporation 2013-2016. This document is the property of Cypress Semiconductor Corporation and its subsidiaries, including Spansion LLC ("Cypress"). This document, including any software or firmware included or referenced in this document ("Software"), is owned by Cypress under the intellectual property laws and treaties of the United States and other countries worldwide. Cypress reserves all rights under such laws and treaties and does not, except as specifically stated in this paragraph, grant any license under its patents, copyrights, trademarks, or other intellectual property rights. If the Software is not accompanied by a license agreement and you do not otherwise have a written agreement with Cypress governing the use of the Software, then Cypress hereby grants you under its copyright rights in the Software, a personal, non-exclusive, nontransferable license (without the right to sublicense) (a) for Software provided in source code form, to modify and reproduce the Software solely for use with Cypress hardware products, only internally within your organization, and (b) to distribute the Software in binary code form externally to end users (either directly or indirectly through resellers and distributors), solely for use on Cypress hardware product units. Cypress also grants you a personal, non-exclusive, nontransferable, license (without the right to sublicense) under those claims of Cypress's patents that are infringed by the Software (as provided by Cypress, unmodified) to make, use, distribute, and import the Software solely to the minimum extent that is necessary for you to exercise your rights under the copyright license granted in the previous sentence. Any other use, reproduction, modification, translation, or compilation of the Software is prohibited.

CYPRESS MAKES NO WARRANTY OF ANY KIND, EXPRESS OR IMPLIED, WITH REGARD TO THIS DOCUMENT OR ANY SOFTWARE, INCLUDING, BUT NOT LIMITED TO, THE IMPLIED WARRANTIES OF MERCHANTABILITY AND FITNESS FOR A PARTICULAR PURPOSE. Cypress reserves the right to make changes to this document without further notice. Cypress does not assume any liability arising out of the application or use of any product or circuit described in this document. Any information provided in this document, including any sample design information or programming code, is provided only for reference purposes. It is the responsibility of the user of this document to properly design, program, and test the functionality and safety of any application made of this information and any resulting product. Cypress products are not designed, intended, or authorized for use as critical components in systems designed or intended for the operation of weapons, weapons systems, nuclear installations, life-support devices or systems, other medical devices or systems (including resuscitation equipment and surgical implants), pollution control or hazardous substances management, or other uses where the failure of the device or system could cause personal injury, death, or property damage ("Unintended Uses"). A critical component is any component of a device or system whose failure to perform can be reasonably expected to cause the failure of the device or system, or to affect its safety or effectiveness. Cypress is not liable, in whole or in part, and Company shall and hereby does release Cypress from any claim, damage, or other liability arising from or related to all Unintended Uses of Cypress products. Company shall indemnify and hold Cypress harmless from and against all claims, costs, damages, and other liabilities, including claims for personal injury or death, arising from or related to any Unintended Uses of Cypress products.

Cypress, the Cypress logo, Spansion, the Spansion logo, and combinations thereof, PSoC, CapSense, EZ-USB, F-RAM, and Traveo are trademarks or registered trademarks of Cypress in the United States and other countries. For a more complete list of Cypress trademarks, visit cypress.com. Other names and brands may be claimed as property of their respective owners.