FUJITSU MICROELECTRONICS
DATA SHEET

DS07-13701-9E

16-bit Proprietary Microcontroller

CMOS

F²MC-16LX MB90570A/570C Series

MB90573/574C/F574A/V570A

■ DESCRIPTION

The MB90570A/570C series is a general-purpose 16-bit microcontroller developed and designed by Fujitsu for process control applications in consumer products that require high-speed real time processing. It contains an I²C bus interface that allows inter-equipment communication to be implemented readily. This product is well adapted to car audio equipment, VTR systems, and other equipment and systems.

The instruction set of F²MC-16LX CPU core inherits AT architecture of F²MC* family with additional instruction sets for high-level languages, extended addressing mode, enhanced multiplication/division instructions, and enhanced bit manipulation instructions. The microcontroller has a 32-bit accumulator for processing long word data.

The MB90570A/570C series has peripheral resources of an 8/10-bit A/D converter, an 8-bit D/A converter, UART (SCI), an extended I/O serial interface, an 8/16-bit up/down counter/timer, an 8/16-bit PPG timer, I/O timer (a 16-bit free run timer, an input capture (ICU), an output compare (OCU)).

*: F²MC is the abbreviation for Fujitsu Flexible Microcontroller.

For the information for microcontroller supports, see the following web site.

http://edevice.fujitsu.com/micom/en-support/

Copyright©2001-2008 FUJITSU MICROELECTRONICS LIMITED All rights reserved
2008.9

■ FEATURES

- Clock
  Embedded PLL clock multiplication circuit
  Operating clock (PLL clock) can be selected from 1/2 to 4× oscillation (at oscillation of 4 MHz, 4 MHz to 16 MHz).
  Minimum instruction execution time: 62.5 ns (at oscillation of 4 MHz, 4× PLL clock, operation at V_{CC} of 5.0 V)
- Maximum memory space
  16 Mbytes
- Instruction set optimized for controller applications
  Rich data types (bit, byte, word, long word)
  Rich addressing mode (23 types)
  Enhanced signed multiplication/division instruction and RETI instruction functions
  Enhanced precision calculation realized by the 32-bit accumulator
- Instruction set designed for high level language (C) and multi-task operations
  Adoption of system stack pointer
  Enhanced pointer indirect instructions
  Barrel shift instructions
- Program patch function (for two address pointers)
- Enhanced execution speed
  4-byte instruction queue
- Enhanced interrupt function
  8 levels, 34 factors
- Automatic data transmission function independent of CPU operation
  Extended intelligent I/O service function (EI^{2}OS): Up to 16 channels
- Embedded ROM size and types
  Mask ROM: 128 kbytes/256 kbytes
  Flash ROM: 256 kbytes
  Embedded RAM size:6 kbytes/10 kbytes (mask ROM)
  10 kbytes (flash memory)
  10 kbytes (evaluation device)
- Low-power consumption (standby) mode
  Sleep mode (mode in which CPU operating clock is stopped)
  Stop mode (mode in which oscillation is stopped)
  CPU intermittent operation mode
  Hardware standby mode
- Process
  CMOS technology
- I/O port
  General-purpose I/O ports (CMOS): 63 ports
  General-purpose I/O ports (with pull-up resistors): 24 ports
  General-purpose I/O ports (open-drain): 10 ports
  Total: 97 ports
- Timer
  Timebase timer/watchdog timer: 1 channel
  8/16-bit PPG timer: 8-bit × 2 channels or 16-bit × 1 channel
- 8/16-bit up/down counter/timer: 1 channel (8-bit × 2 channels)

(Continued)

(Continued)

- 16-bit I/O timer
  16-bit free run timer: 1 channel
  Input capture (ICU): Generates an interrupt request by latching a 16-bit free run timer counter value upon detection of an edge input to the pin.
  Output compare (OCU): Generates an interrupt request and reverse the output level upon detection of a match between the 16-bit free run timer counter value and the compare setting value.
- Extended I/O serial interface: 3 channels
- I^2C interface (1 channel)
  Serial I/O port for supporting Inter IC BUS
- UART0 (SCI), UART1 (SCI)
  With full-duplex double buffer
  Clock asynchronized or clock synchronized transmission can be selectively used.
- DTP/external interrupt circuit (8 channels)
  A module for starting extended intelligent I/O service (EI^2OS) and generating an external interrupt triggered by an external input.
- Delayed interrupt generation module
  Generates an interrupt request for switching tasks.
- 8/10-bit A/D converter (8 channels)
  8/10-bit resolution
  Starting by an external trigger input.
  Conversion time: 26.3 µs
- 8-bit D/A converter (based on the R-2R system)
  8-bit resolution: 2 channels (independent)
  Setup time: 12.5 µs
- Watch timer: 1 channel
- Chip select output (8 channels)
  An active level can be set.
- Clock output function

■ PRODUCT LINEUP

Item \ Part number		MB90573	MB90574C	MB90F574A	MB90V570A
Classification		Mask ROM products		Flash ROM products	Evaluation product
ROM size		128 kbytes	256 kbytes		None
RAM size		6 kbytes	10 kbytes		
CPU functions		The number of instructions: 340 Instruction bit length: 8 bits, 16 bits Instruction length: 1 byte to 7 bytes Data bit length: 1 bit, 8 bits, 16 bits Minimum execution time: 62.5 ns (at machine clock of 16 MHz) Interrupt processing time: 1.5 μs (at machine clock of 16 MHz, minimum value)			
Ports		General-purpose I/O ports (CMOS output): 63 General-purpose I/O ports (with pull-up resistor): 24 General-purpose I/O ports (N-ch open-drain output): 10 Total: 97			
UART0 (SCI), UART1 (SCI)		Clock synchronized transmission (62.5 kbps to 1 Mbps) Clock asynchronized transmission (1202 bps to 9615 bps) Transmission can be performed by bi-directional serial transmission or by master/slave connection.			
8/10-bit A/D converter		Resolution: 8/10-bit Number of inputs: 8 One-shot conversion mode (converts selected channel only once) Scan conversion mode (converts two or more successive channels and can program up to 8 channels.) Continuous conversion mode (converts selected channel continuously) Stop conversion mode (converts selected channel and stop operation repeatedly)			
8/16-bit PPG timer		Number of channels: 1 (or 8-bit × 2 channels) PPG operation of 8-bit or 16-bit A pulse wave of given intervals and given duty ratios can be output. Pulse interval: 62.5 ns to 1 μs (at oscillation of 4 MHz, machine clock of 16 MHz)			
8/16-bit up/down counter/ timer		Number of channels: 1 (or 8-bit × 2 channels) Event input: 6 channels 8-bit up/down counter/timer used: 2 channels 8-bit re-load/compare function supported: 1 channel			
16-bit I/O timer	16-bit free run timer	Number of channel: 1 Overflow interrupts			
	Output compare (OCU)	Number of channels: 4 Pin input factor: A match signal of compare register			
	Input capture (ICU)	Number of channels: 2 Rewriting a register value upon a pin input (rising, falling, or both edges)			

(Continued)

(Continued)

Item \ Part number	MB90573	MB90574C	MB90F574A	MB90V570A
DTP/external interrupt circuit	Number of inputs: 8 Started by a rising edge, a falling edge, an “H” level input, or an “L” level input. External interrupt circuit or extended intelligent I/O service (EI^{2}OS) can be used.			
Delayed interrupt generation module	An interrupt generation module for switching tasks used in real time operating systems.			
Extended I/O serial interface	Clock synchronized transmission (3125 bps to 1 Mbps) LSB first/MSB first			
I^{2}C interface	Serial I/O port for supporting Inter IC BUS			
Timebase timer	18-bit counter Interrupt interval: 1.024 ms, 4.096 ms, 16.384 ms, 131.072 ms (at oscillation of 4 MHz)			
8-bit D/A converter	8-bit resolution Number of channels: 2 channels Based on the R-2R system			
Watchdog timer	Reset generation interval: 3.58 ms, 14.33 ms, 57.23 ms, 458.75 ms (at oscillation of 4 MHz, minimum value)			
Low-power consumption (standby) mode	Sleep/stop/CPU intermittent operation/watch timer/hardware standby			
Process	CMOS			
Power supply voltage for operation*	4.5 V to 5.5 V			

* : Varies with conditions such as the operating frequency. (See section “■ ELECTRICAL CHARACTERISTICS.”)
Assurance for the MB90V570A is given only for operation with a tool at a power voltage of 4.5 V to 5.5 V, an operating temperature of 0 °C to +25 °C, and an operating frequency of 1 MHz to 16 MHz.

■ PACKAGE AND CORRESPONDING PRODUCTS

Package	MB90573	MB90F574A	MB90574C
FPT-120P-M24	○	○	×
FPT-120P-M13	○	○	○
FPT-120P-M21	×	○	○

○ : Available ×: Not available

Note : For more information about each package, see section “■ PACKAGE DIMENSIONS.”

■ DIFFERENCES AMONG PRODUCTS

Memory Size

In evaluation with an evaluation product, note the difference between the evaluation product and the product actually used. The following items must be taken into consideration.

- The MB90V570A does not have an internal ROM, however, operations equivalent to chips with an internal ROM can be evaluated by using a dedicated development tool, enabling selection of ROM size by settings of the development tool.
- In the MB90V570A, images from $FF4000_H$ to $FFFFFF_H$ are mapped to bank 00, and $FE0000_H$ to $FF3FFF_H$ to mapped to bank FE and FF only. (This setting can be changed by configuring the development tool.)
- In the MB90573/574C/F574A, images from $FF4000_H$ to $FFFFFF_H$ are mapped to bank 00, and $FF0000_H$ to $FF3FFF_H$ to bank FF only.
- The products designated with /A or /C are different from those without /A or /C in that they are DTP/externally-interrupted types which return from standby mode at the ch.0 to ch.1 edge request.

■ PIN ASSIGNMENT

(Top view)

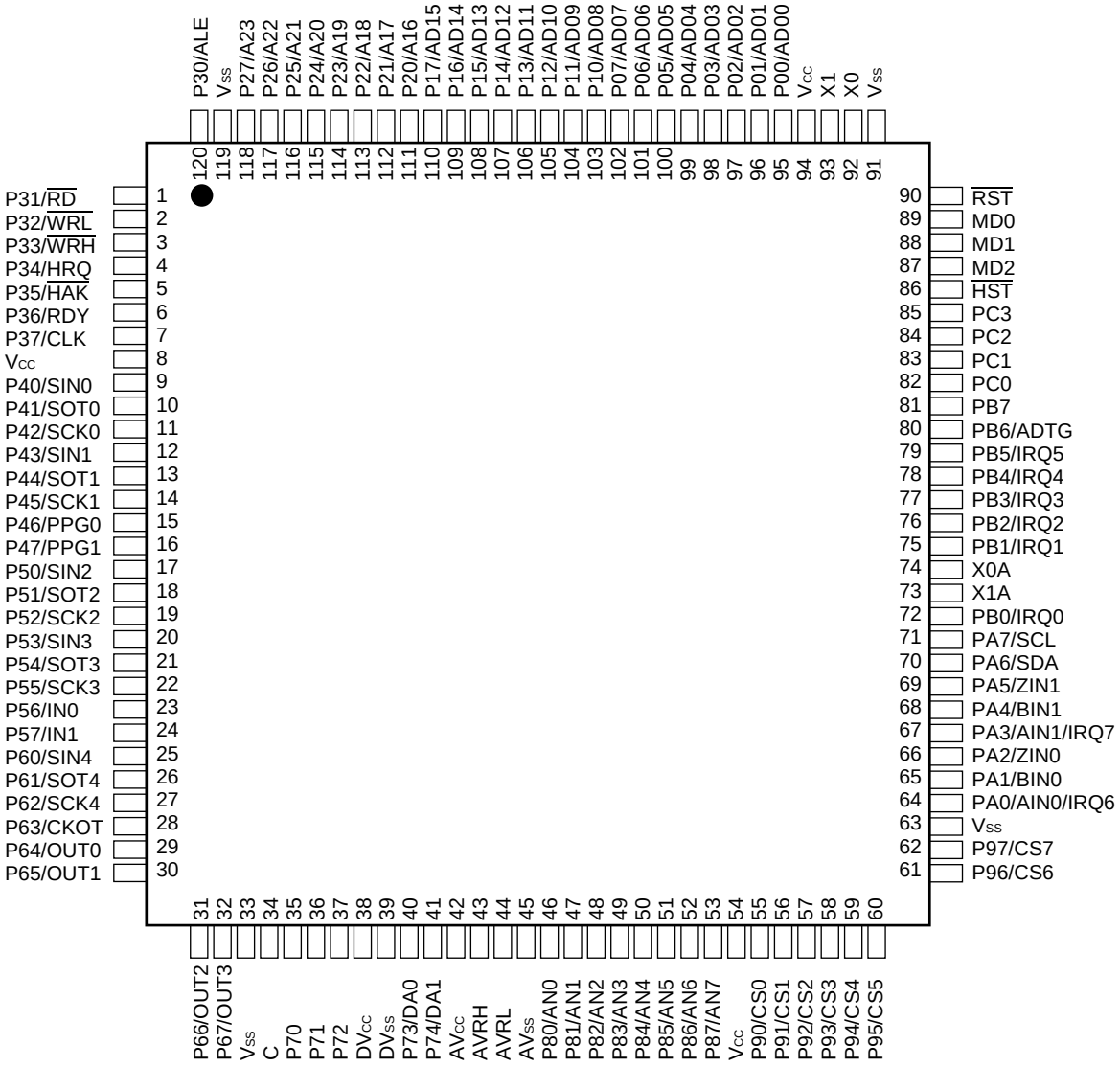

(FPT-120P-M24)
(FPT-120P-M13)
(FPT-120P-M21)

■ PIN DESCRIPTION

Pin no. LQFP *1 QFP *2	Pin name	Circuit type	Function
92,93	X0,X1	A	High speed oscillator pins
74,73	X0A,X1A	B	Low speed oscillator pins
89 to 87	MD0 to MD2	C	These are input pins used to designate the operating mode. They should be connected directly to Vcc or Vss.
90	$\overline{RST}$	C	Reset input pin
86	$\overline{HST}$	C	Hardware standby input pin
95 to 102	P00 to P07	D	In single chip mode, these are general purpose I/O pins. When set for input, they can be set by the pull-up resistance setting register (RDR0). When set for output, this setting will be invalid.
	AD00 toAD07		In external bus mode, these pins function as address low output/data low I/O pins.
103 to 110	P10 to P17	D	In single chip mode, these are general purpose I/O pins. When set for input, they can be set by the pull-up resistance setting register (RDR1). When set for output, the setting will be invalid.
	AD08 toAD15		In external bus mode, these pins function as address middle output/ data high I/O pins.
111 to 118	P20 to P27	E	In single chip mode this is a general-purpose I/O port.
	A16 to A23		In external bus mode, these pins function as address high output pins.
120	P30	E	In single chip mode this is a general-purpose I/O port.
	ALE		In external bus mode, this pin functions as the address latch enable signal output pin.
1	P31	E	In single chip mode this is a general-purpose I/O port.
	$\overline{RD}$		In external bus mode, this pin functions as the read strobe signal output pin.
2	P32	E	In single chip mode this is a general-purpose I/O port.
	$\overline{WRL}$		In external bus mode, this pin functions as the data bus lower 8-bit write strobe signal output pin.
3	P33	E	In single chip mode this is a general-purpose I/O port.
	$\overline{WRH}$		In external bus mode, this pin functions as the data bus upper 8-bit write strobe signal output pin.
4	P34	E	In single chip mode this is a general-purpose I/O port.
	HRQ		In external bus mode, this pin functions as the hold request signal input pin.
5	P35	E	In single chip mode this is a general-purpose I/O port.
	$\overline{HAK}$		In external bus mode, this pin functions as the hold acknowledge signal output pin.
6	P36	E	In single chip mode this is a general-purpose I/O port.
	RDY		In external bus mode, this pin functions as the ready signal input pin.

*1 : FPT-120P-M24

*2 : FPT-120P-M13, FPT-120P-M21

(Continued)

Pin no. LQFP *1 QFP *2	Pin name	Circuit type	Function
7	P37	E	In single chip mode this is a general-purpose I/O port.
	CLK		In external bus mode, this pin functions as the clock (CLK) signal output pin.
9	P40	F	In single chip mode this is a general-purpose I/O port. It can be set to open drain by the ODR4 register.
	SIN0		This is also the UART ch.0 serial data input pin. While UART ch.0 is in input operation, this input signal is in continuous use, and therefore the output function should only be used when needed. If shared by output from other functions, this pin should be output disabled during SIN operation.
10	P41	F	In single chip mode this is a general-purpose I/O port. It can be set to open drain by the ODR4 register.
	SOT0		This is also the UART ch.0 serial data output pin. This function is valid when UART ch.0 is enabled for data output.
11	P42	F	In single chip mode this is a general-purpose I/O port. It can be set to open drain by the ODR4 register.
	SCK0		This is also the UART ch.0 serial clock I/O pin. This function is valid when UART ch.0 is enabled for clock output.
12	P43	F	In single chip mode this is a general-purpose I/O port. It can be set to open-drain by the ODR4 register.
	SIN1		This is also the UART ch.1 serial data input pin. While UART ch.1 is in input operation, this input signal is in continuous use, and therefore the output function should only be used when needed. If shared by output from other functions, this pin should be output disabled during SIN operation.
13	P44	F	In single chip mode this is a general-purpose I/O port. It can be set to opendrain by the ODR4 register.
	SOT1		This is also the UART ch.1 serial data output pin. This function is valid when UART ch.1 is enabled for data output.
14	P45	F	In single chip mode this is a general-purpose I/O port. It can be set to open drain by the ODR4 register.
	SCK1		This is also the UART ch.1 serial clock I/O pin. This function is valid when UART ch.1 is enabled for clock output.
15,16	P46,P47	F	In single chip mode this is a general-purpose I/O port. It can be set to open drain by the ODR4 register.
	PPG0,PPG1		These are also the PPG0, 1 output pins. This function is valid when PPG0, 1 output is enabled.
17	P50	E	In single chip mode this is a general-purpose I/O port.
	SIN2		This is also the I/O serial ch.0 data input pin. During serial data input, this input signal is in continuous use, and therefore the output function should only be used when needed.

*1 : FPT-120P-M24

*2 : FPT-120P-M13, FPT-120P-M21

(Continued)

Pin no. LQFP *1 QFP *2	Pin name	Circuit type	Function
18	P51	E	In single chip mode this is a general-purpose I/O port.
	SOT2		This is also the I/O serial ch.0 data output pin. This function is valid when serial ch.0 is enabled for serial data output.
19	P52	E	In single chip mode this is a general-purpose I/O port.
	SCK2		This is also the I/O serial ch.0 clock I/O pin. This function is valid when serial ch.0 is enabled for serial data output.
20	P53	E	In single chip mode this is a general-purpose I/O port.
	SIN3		This is also the I/O serial ch.1 data input pin. During serial data input, this input signal is in continuous use, and therefore the output function should only be used when needed.
21	P54	E	In single chip mode this is a general-purpose I/O port.
	SOT3		This is also the I/O serial ch.1 data output pin. This function is valid when serial ch.1 is enabled for serial data output.
22	P55	E	In single chip mode this is a general-purpose I/O port.
	SCK3		This is also the I/O serial ch.1 clock I/O pin. This function is valid when serial ch.1 is enabled for serial data output.
23,24	P56,P57	E	In single chip mode this is a general-purpose I/O port.
	IN0,IN1		These are also the input capture ch.0/1 trigger input pins. During input capture signal input on ch.0/1 this function is in continuous use, and therefore the output function should only be used when needed.
25	P60	F	In single chip mode this is a general-purpose I/O port. When set for input it can be set by the pull-up resistance register (RDR6). When set for output this setting will be invalid.
	SIN4		This is also the I/O serial ch.2 data input pin. During serial data input this function is in continuous use, and therefore the output function should only be used when needed.
26	P61	F	In single chip mode this is a general-purpose I/O port. When set for input it can be set by the pull-up resistance register (RDR6). When set for output this setting will be invalid.
	SOT4		This is also the I/O serial ch.2 data output pin. This function is valid when serial ch.2 is enabled for serial data output.
27	P62	F	In single chip mode this is a general-purpose I/O port. When set for input it can be set by the pull-up resistance register (RDR6). When set for output this setting will be invalid.
	SCK4		This is also the I/O serial ch.2 serial clock I/O pin. This function is valid when serial ch.2 is enabled for serial data output.
28	P63	F	In single chip mode this is a general-purpose I/O port. When set for input it can be set by the pull-up resistance register (RDR6). When set for output this setting will be invalid.
	CKOT		This is also the clock monitor output pin. This function is valid when clock monitor output is enabled.

*1 : FPT-120P-M24

*2 : FPT-120P-M13, FPT-120P-M21

(Continued)

Pin no. LQFP *1 QFP *2	Pin name	Circuit type	Function
29 to 32	P64 to P67	F	In single chip mode these are general-purpose I/O ports. When set for input they can be set by the pull-up resistance register (RDR6). When set for output this setting will be invalid.
	OUT0 to OUT3		These are also the output compare ch.0 to ch.3 event output pins. This function is valid when the respective channel(s) are enabled for output.
35 to 37	P70 to P72	E	These are general purpose I/O ports.
40,41	P73,P74	I	These are general purpose I/O ports.
	DA0,DA1		These are also the D/A converter ch.0,1 analog signal output pins.
46 to 53	P80 to P87	K	These are general purpose I/O ports.
	AN0 to AN7		These are also A/D converter analog input pins. This function is valid when analog input is enabled.
55 to 62	P90 to P97	E	These are general purpose I/O ports.
	CS0 to CS7		These are also chip select signal output pins. This function is valid when chip select signal output is enabled.
34	C	G	This is the power supply stabilization capacitor pin. It should be connected externally to an 0.1 µF ceramic capacitor. Note that this is not required on the FLASH model (MB90F574A) and MB90574C.
64	PA0	E	This is a general purpose I/O port.
	AIN0		This pin is also used as count clock A input for 8/16-bit up-down counter ch.0.
	IRQ6		This pin can also be used as interrupt request input ch. 6.
65	PA1	E	This is a general purpose I/O port.
	BIN0		This pin is also used as count clock B input for 8/16-bit up-down counter ch.0.
66	PA2	E	This is a general purpose I/O port.
	ZIN0		This pin is also used as count clock Z input for 8/16-bit up-down counter ch.0.
67	PA3	E	This is a general purpose I/O port.
	AIN1		This pin is also used as count clock A input for 8/16-bit up-down counter ch.1.
	IRQ7		This pin can also be used as interrupt request input ch.7.
68	PA4	E	This is a general purpose I/O port.
	BIN1		This pin is also used as count clock B input for 8/16-bit up-down counter ch.1.
69	PA5	E	This is a general purpose I/O port.
	ZIN1		This pin is also used as count clock Z input for 8/16-bit up-down counter ch.1.

*1 : FPT-120P-M24

*2 : FPT-120P-M13, FPT-120P-M21

(Continued)

(Continued)

Pin no. LQFP *1 QFP *2	Pin name	Circuit type	Function
70	PA6	L	This is a general purpose I/O port.
	SDA		This pin is also used as the data I/O pin for the I²C interface. This function is valid when the I²C interface is enabled for operation. While the I²C interface is operating, this port should be set to the input level (DDRA: bit6 = 0).
71	PA7	L	This is a general purpose I/O port.
	SCL		This pin is also used as the clock I/O pin for the I²C interface. This function is valid when the I²C interface is enabled for operation. While the I²C interface is operating, this port should be set to the input level (DDRA: bit7 = 0).
72, 75 to 79	PB0, PB1 to PB5	E	These are general-purpose I/O ports.
	IRQ0, IRQ1 to IRQ5		These pins are also the external interrupt input pins. IRQ0, 1 are enabled for both rising and falling edge detection, and therefore cannot be used for recovery from STOP status for MB90573. However, IRQ0, 1 can be used for recovery from STOP status for MB90V570A, MB90F574A and MB90574C.
80	PB6	E	This is a general purpose I/O port.
	ADTG		This is also the A/D converter external trigger input pin. While the A/D converter is in input operation, this input signal is in continuous use, and therefore the output function should only be used when needed.
81	PB7	E	This is a general purpose I/O port.
82 to 85	PC0 to PC3	E	These are general purpose I/O ports.
8,54,94	V_{CC}	Power supply	These are power supply (5V) input pins.
33,63, 91,119	V_{SS}	Power supply	These are power supply (0V) input pins.
42	AV_{CC}	H	This is the analog macro (D/A, A/D etc.) Vcc power supply input pin.
43	AVRH	J	This is the A/D converter Vref+ input pin. The input voltage should not exceed Vcc.
44	AVRL	H	This is the A/D converter Vref- input pin. The input voltage should not less than Vss.
45	AV_{SS}	H	This is the analog macro (D/A, A/D etc.) Vss power supply input pin.
38	DV_{CC}	H	This is the D/A converter Vref input pin. The input voltage should not exceed Vcc.
39	DV_{SS}	H	This is the D/A converter GND power supply pin. It should be set to Vss equivalent potential.

*1 : FPT-120P-M24

*2 : FPT-120P-M13, FPT-120P-M21

■ I/O CIRCUIT TYPE

Type	Circuit	Remarks
A	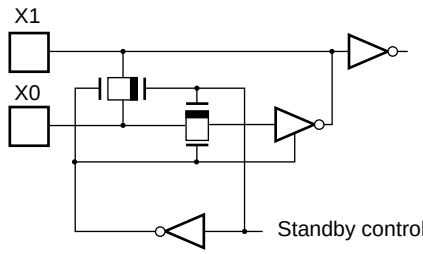	• Oscillator circuit Oscillator recovery resistance for high speed = approx. 1 MΩ
B	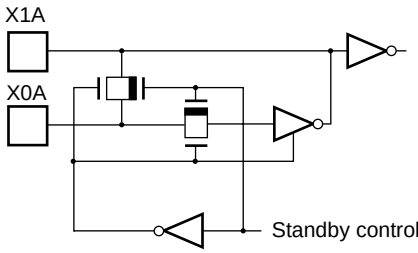	• Oscillator circuit Oscillator recovery resistance for low speed = approx. 10 MΩ
C	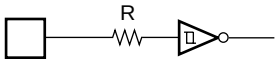	• Hysteresis input pin Resistance value = approx. 50 kΩ (typ.)
D	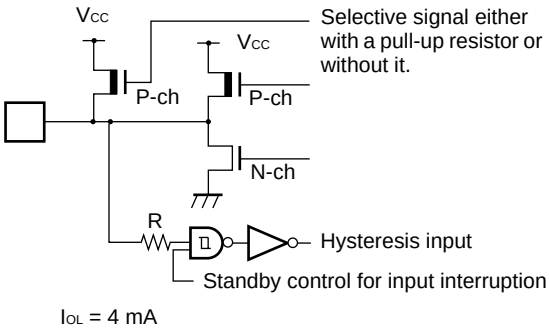	• CMOS hysteresis input pin with input pull-up control • CMOS level output. • CMOS hysteresis input (Includes input shut down standby control function) • Pull-up resistance value = approx. 50 kΩ(typ.) I_{OL} = 4mA

(Continued)

Type	Circuit	Remarks
E	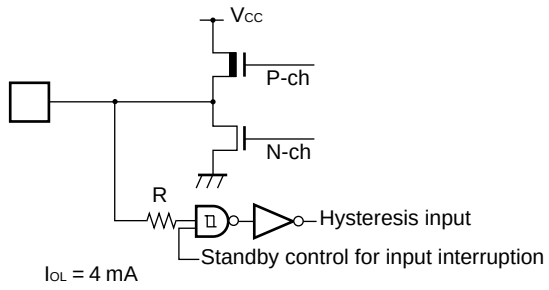	• CMOS hysteresis input/output pin. • CMOS level output • CMOS hysteresis input (Includes input shut down standby control function) I_{OL} = 4 mA
F	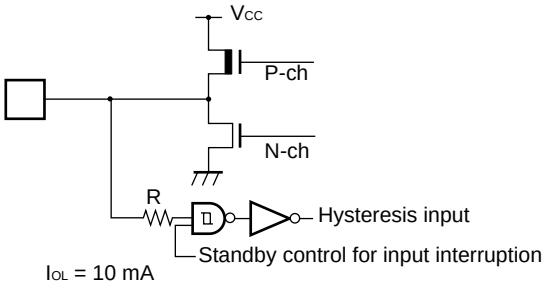	• CMOS hysteresis input/output pin. • CMOS level output • CMOS hysteresis input (Includes input shut down standby control function) I_{OL} = 10 mA (Large current port)
G	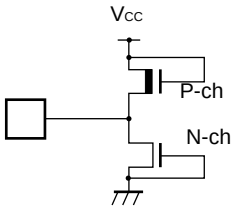	• C pin output (capacitance connector pin).
H	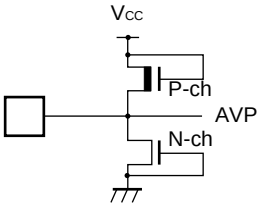	• Analog power supply protector circuit.
I	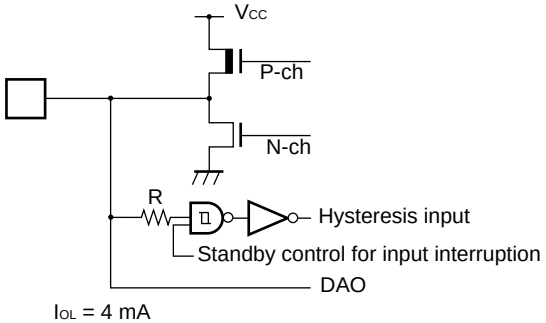	• CMOS hysteresis input/output • Analog output/CMOS output dual-function pin (CMOS output is not available during analog output.) (Analog output priority: DAE = 1) • Includes input shut down standby control function. I_{OL} = 4mA

(Continued)

(Continued)

Type	Circuit	Remarks
J	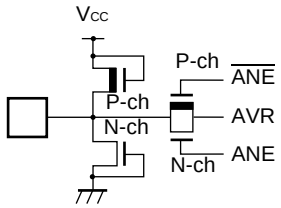	• A/D converter ref+ power supply input pin(AVRH), with power supply protector circuit.
K	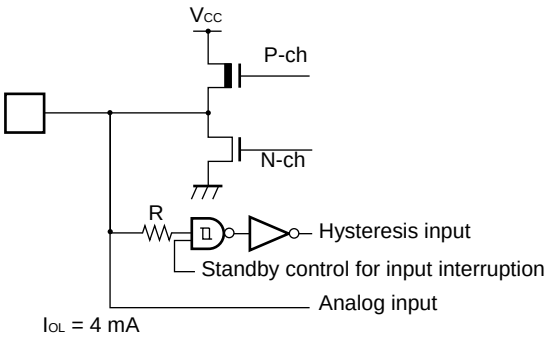	• CMOS hysteresis input /analog input dual-function pin. • CMOS output • Includes input shut down function at input shut down standby.
L	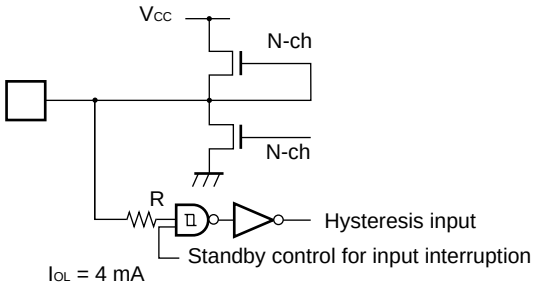	• Hysteresis input • N-ch open-drain output • Includes input shut down standby control function. I_{OL}= 4mA

■ HANDLING DEVICES

1. Preventing Latchup

CMOS ICs may cause latchup in the following situations:

- When a voltage higher than Vcc or lower than Vss is applied to input or output pins.
- When a voltage exceeding the rating is applied between Vcc and Vss.
- When AVcc power is supplied prior to the Vcc voltage.

In turning on/turning off the analog power supply, make sure the analog power voltage (AV_{CC}, AVRH, DV_{CC})and analog input voltages not exceed the digital voltage (V_{CC}).

2. Treatment of unused pins

Leaving unused input pins open may result in misbehavior or latch up and possible permanent damage of the device. Therefor they must be tied to V_{CC} or Ground through resistors. In this case those resistors should be more than 2 kΩ.
Unused bidirectional pins should be set to the output state and can be left open, or the input state with the above described connection.

3. Notes on Using External Clock

In using the external clock, drive X0 pin only and leave X1 pin unconnected.

- **Using external clock**

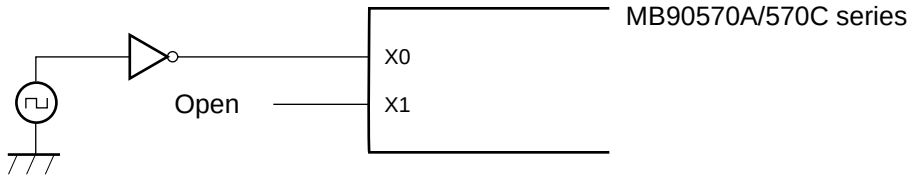

4. Unused Sub Clock Mode

If sub clock modes are not used, the oscillator should be connected to the X01A pin and X1A pin

5. Power Supply Pins (V_{CC}/V_{SS})

In products with multiple V_{CC} or V_{SS} pins, the pins of a same potential are internally connected in the device to avoid abnormal operations including latch-up. However, connect the pins external power and ground lines to lower the electro-magnetic emission level, to prevent abnormal operation of strobe signals caused by the rise in the ground level, and to conform to the total current rating.

Make sure to connect V_{CC} and V_{SS} pins via lowest impedance to power lines.

It is recommended to provide a bypass capacitor of around 0.1 µF between V_{CC} and V_{SS} pin near the device.

- **Using power supply pins**

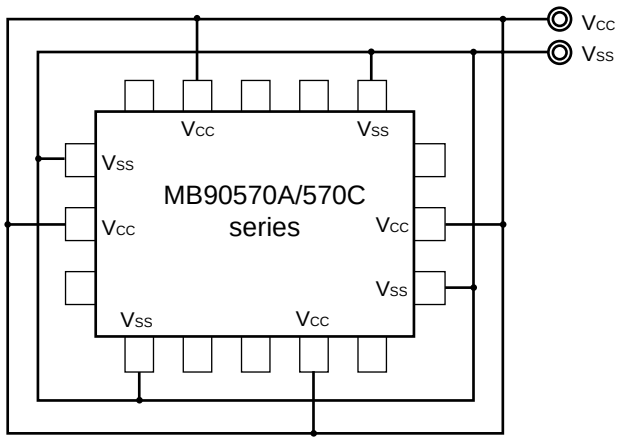

6. Crystal Oscillator Circuit

Noises around X0 or X1 pins may be possible causes of abnormal operations. Make sure to provide bypass capacitors via shortest distance from X0, X1 pins, crystal oscillator (or ceramic resonator) and ground lines, and make sure, to the utmost effort, that lines of oscillation circuit do not cross the lines of other circuits.

It is highly recommended to provide a printed circuit board art work surrounding X0 and X1 pins with an grand area for stabilizing the operation.

Please ask the crystal maker to evaluate the oscillational characteristics of the crystal and this device.

7. Turning-on Sequence of Power Supply to A/D Converter and Analog Inputs

Make sure to turn on the A/D converter power supply, D/A converter power supply (AV_{CC}, AVRH, AVRL, DV_{CC},DV_{SS}) and analog inputs (AN0 to AN7) after turning-on the digital power supply (V_{CC}).

Turn-off the digital power after turning off the A/D converter supply and analog inputs. In this case, make sure that the voltage does not exceed AVRH or AV_{CC} (turning on/off the analog and digital power supplies simultaneously is acceptable).

8. Connection of Unused Pins of A/D Converter

Connect unused pins of A/D converter to $AV_{CC} = V_{CC}$, $AV_{SS} = AVRH = DV_{CC} = V_{SS}$.

9. N.C. Pins

The N.C. (internally connected) pins must be opened for use.

10. Notes on Energization

To prevent the internal regulator circuit from malfunctioning, set the voltage rise time during energization at 50 or more µs (0.2 V to 2.7 V).

11. Indeterminate outputs from ports 0 and 1

The outputs from ports 0 and 1 become indeterminate during oscillation setting time of step-down circuit (during a power-on reset) after the power is turned on. (MB90573, MB90V570A)

The series without built-in step-down circuit have no oscillation setting time of step-down circuit, so outputs should not become indeterminate. (MB90F574A,MB90574C)

Timing chart of indeterminate outputs from ports 0 and 1

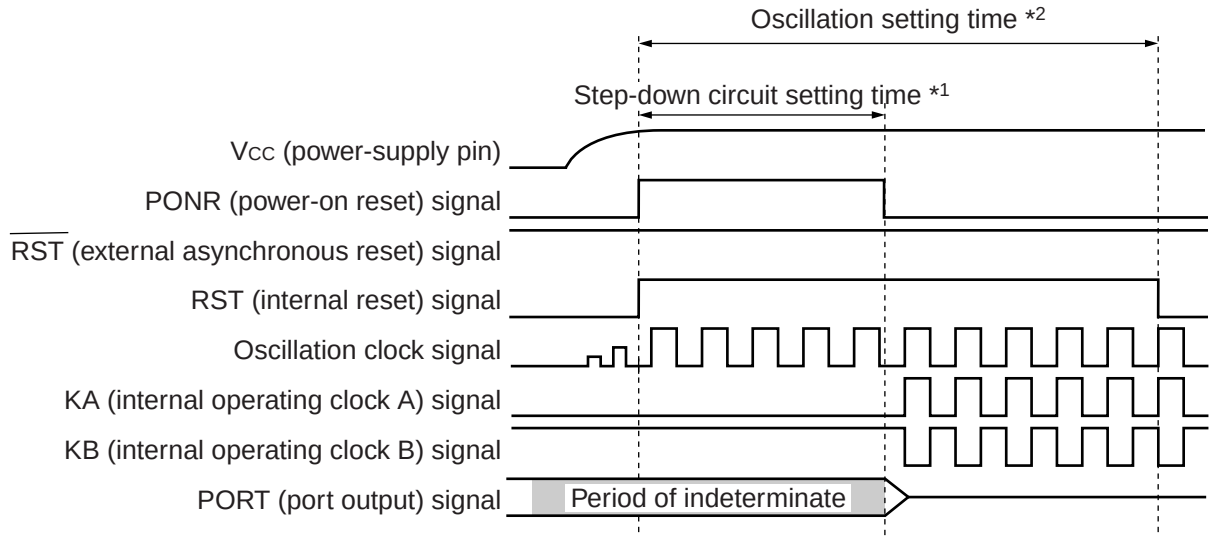

*1: Step-down circuit setting time 2^{17}/oscillation clock frequency (oscillation clock frequency of 16 MHz: 8.19 ms)

*2: Oscillation setting time 2^{18}/oscillation clock frequency (oscillation clock frequency of 16 MHz: 16.38 ms)

12. Initialization

In the device, there are internal registers which are initialized only by a power-on reset. Turn on the power again to initialize these registers.

13. Return from standby state

If the power-supply voltage goes below the standby RAM holding voltage in the standby state, the device may fail to return from the standby state. In this case, reset the device via the external reset pin to return to the normal state.

14. Precautions for Use of 'DIV A, Ri,' and 'DIVW A, Ri' Instructions

The signed multiplication-division instructions 'DIV A, Ri,' and 'DIVW A, RWi' should be used when the corresponding bank registers (DTB, ADB, USB, SSB) are set to value '00h.' If the corresponding bank registers (DTB, ADB, USB, SSB) are set to a value other than '00h,' then the remainder obtained after the execution of the instruction will not be placed in the instruction operand register.

15. Precautions for Use of REALOS

Extended intelligent I/O service (EI^{2}OS) cannot be used, when REALOS is used.

16. Caution on PLL Clock Mode

If the PLL clock mode is selected, the microcontroller attempt to be working with the self-oscillating circuit even when there is no external oscillator or external clock input is stopped. Performance of this operation, however, cannot be guaranteed.

■ BLOCK DIAGRAM

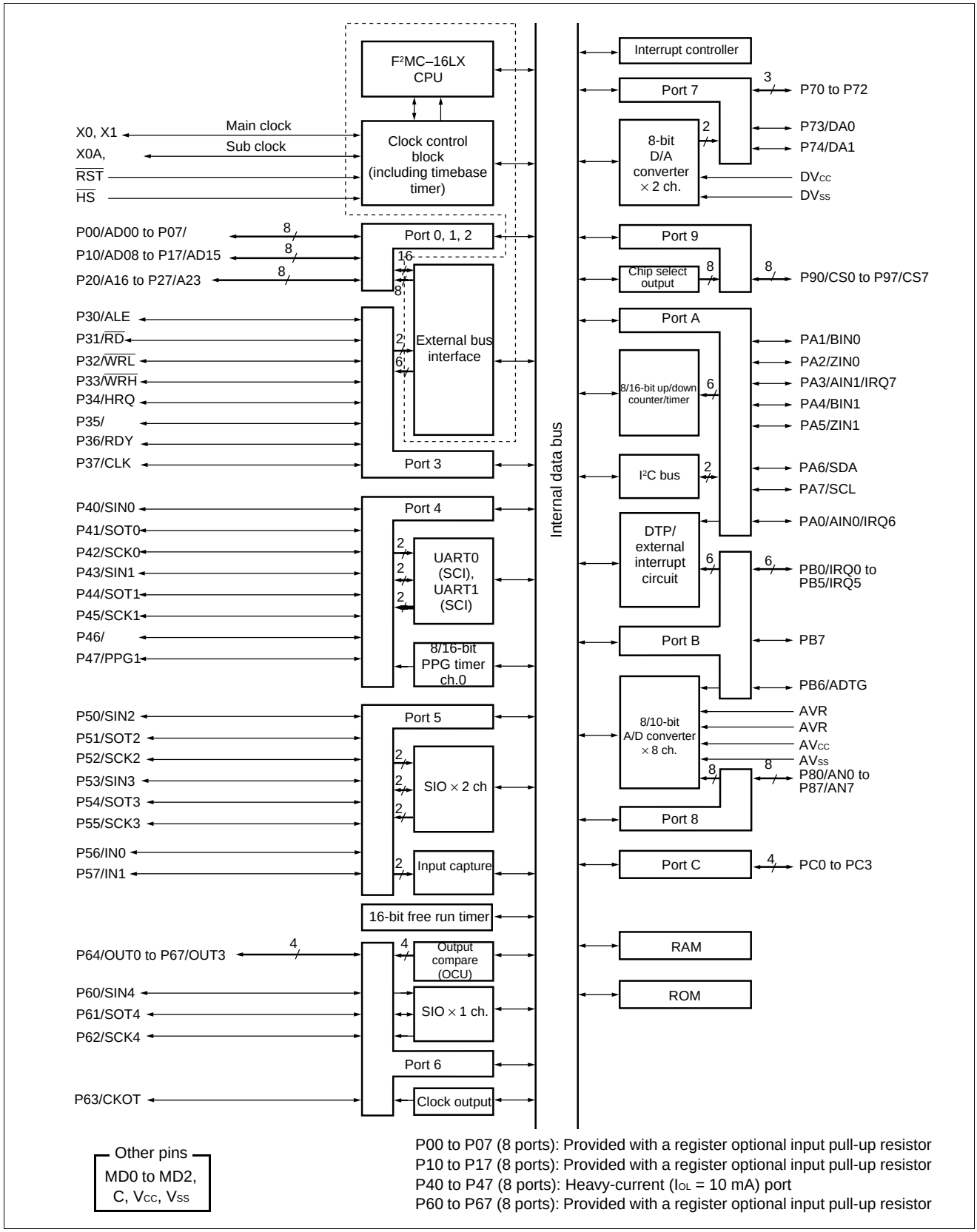

P00 to P07 (8 ports): Provided with a register optional input pull-up resistor
P10 to P17 (8 ports): Provided with a register optional input pull-up resistor
P40 to P47 (8 ports): Heavy-current (I_{OL} = 10 mA) port
P60 to P67 (8 ports): Provided with a register optional input pull-up resistor

■ MEMORY MAP

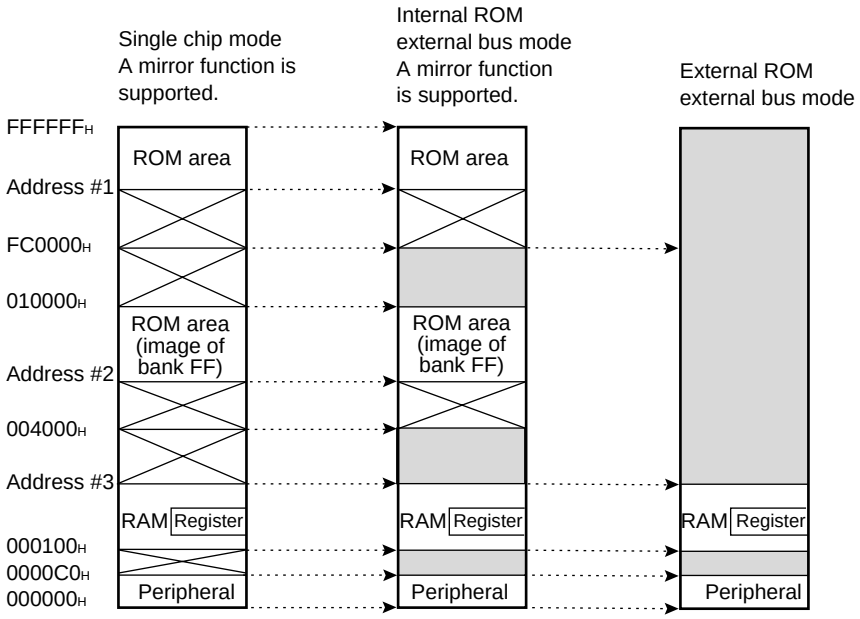

Part number	Address #1*	Address #2*	Address #3*
MB90573	FE0000H	004000H	001800H
MB90574C	FC0000H	004000H	002900H
MB90F574A	FC0000H	004000H	002900H

: Internal access memory
: External access memory
: Inhibited area

*: Addresses #1, #2 and #3 are unique to the product type.

Note : The ROM data of bank FF is reflected in the upper address of bank 00, realizing effective use of the C compiler small model. The lower 16-bit of bank FF and the lower 16-bit of bank 00 is assigned to the same address, enabling reference of the table on the ROM without stating “far”.

For example, if an attempt has been made to access 00C000H, the contents of the ROM at FFC000H are accessed actually. Since the ROM area of the FF bank exceeds 48 kbytes, the whole area cannot be reflected in the image for the 00 bank. The ROM data at FF4000H to FFFFFFH looks, therefore, as if it were the image for 00400H to 00FFFFH. Thus, it is recommended that the ROM data table be stored in the area of FF4000H to FFFFFFH.

■ F²MC-16LX CPU PROGRAMMING MODEL

- **Dedicated registers**

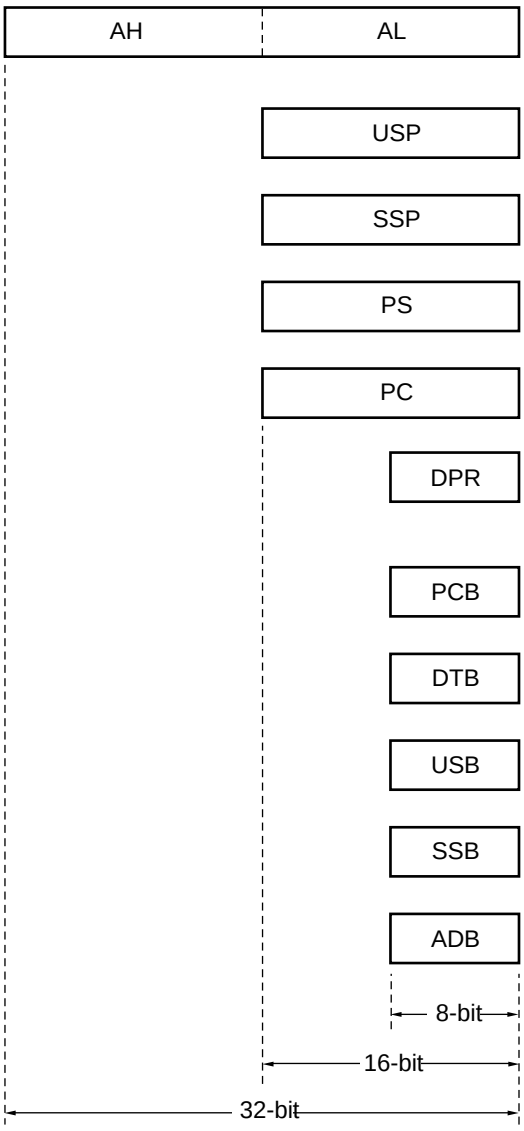

:**Accumulator (A)**
Dual 16-bit register used for storing results of calculation etc. The two 16-bit registers can be combined to be used as a 32-bit register.

:**User stack pointer (USP)**
The 16-bit pointer indicating a user stack address.

:**System stack pointer (SSP)**
The 16-bit pointer indicating the status of the system stack address.

:**Processor status (PS)**
The 16-bit register indicating the system status.

:**Program counter (PC)**
The 16-bit register indicating storing location of the current instruction code.

:**Direct page register (DPR)**
The 8-bit register indicating bit 8 through 15 of the operand address in the short direct addressing mode.

:**Program bank register (PCB)**
The 8-bit register indicating the program space.

:**Data bank register (DTB)**
The 8-bit register indicating the data space.

:**User stack bank register (USB)**
The 8-bit register indicating the user stack space.

:**System stack bank register (SSB)**
The 8-bit register indicating the system stack space.

:**Additional data bank register (ADB)**
The 8-bit register indicating the additional data space.

- **General-purpose registers**

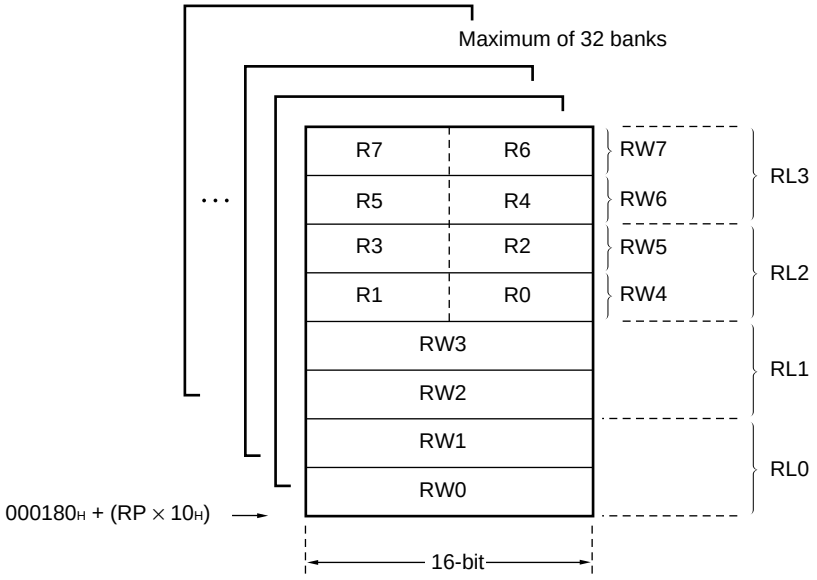

- **Processor status (PS)**

	ILM			RP					CCR							
	bit 15	bit 14	bit 13	bit 12	bit 11	bit 10	bit 9	bit 8	bit 7	bit 6	bit 5	bit 4	bit 3	bit 2	bit 1	bit 0
PS	ILM2	ILM1	ILM0	B4	B3	B2	B1	B0	—	I	S	T	N	Z	V	C
Initial value	0	0	0	0	0	0	0	0	—	0	1	X	X	X	X	X

—: Reserved
X: Undefined

■ I/O MAP

Address	Abbreviated register name	Register name	Read/ write	Resource name	Initial value
000000H	PDR0	Port 0 data register	R/W	Port 0	XXXXXXXXB
000001H	PDR1	Port 1 data register	R/W	Port 1	XXXXXXXXB
000002H	PDR2	Port 2 data register	R/W	Port 2	XXXXXXXXB
000003H	PDR3	Port 3 data register	R/W	Port 3	XXXXXXXXB
000004H	PDR4	Port 4 data register	R/W	Port 4	XXXXXXXXB
000005H	PDR5	Port 5 data register	R/W	Port 5	XXXXXXXXB
000006H	PDR6	Port 6 data register	R/W	Port 6	XXXXXXXXB
000007H	PDR7	Port 7 data register	R/W	Port 7	XXXXXXXXB
000008H	PDR8	Port 8 data register	R/W	Port 8	XXXXXXXXB
000009H	PDR9	Port 9 data register	R/W	Port 9	XXXXXXXXB
00000AH	PDRA	Port A data register	R/W	Port A	XXXXXXXXB
00000BH	PDRB	Port B data register	R/W	Port B	XXXXXXXXB
00000CH	PDRC	Port C data register	R/W	Port C	XXXXXXXXB
00000DH to 00000FH	(Disabled)				
000010H	DDR0	Port 0 direction register	R/W	Port 0	00000000B
000011H	DDR1	Port 1 direction register	R/W	Port 1	00000000B
000012H	DDR2	Port 2 direction register	R/W	Port 2	00000000B
000013H	DDR3	Port 3 direction register	R/W	Port 3	00000000B
000014H	DDR4	Port 4 direction register	R/W	Port 4	00000000B
000015H	DDR5	Port 5 direction register	R/W	Port 5	00000000B
000016H	DDR6	Port 6 direction register	R/W	Port 6	00000000B
000017H	DDR7	Port 7 direction register	R/W	Port 7	---00000B
000018H	DDR8	Port 8 direction register	R/W	Port 8	00000000B
000019H	DDR9	Port 9 direction register	R/W	Port 9	00000000B
00001AH	DDRA	Port A direction register	R/W	Port A	00000000B
00001BH	DDRB	Port B direction register	R/W	Port B	00000000B
00001CH	DDRC	Port C direction register	R/W	Port C	00000000B
00001DH	ODR4	Port 4 output pin register	R/W	Port 4	00000000B
00001EH	ADER	Analog input enable register	R/W	Port 8, 8/10-bit A/D converter	11111111B
00001FH	(Disabled)				
000020H	SMR0	Serial mode register 0	R/W	UART0 (SCI)	00000000B
000021H	SCR0	Serial control register 0	R/W		00000100B

(Continued)

Address	Abbreviated register name	Register name	Read/ write	Resource name	Initial value
000022H	SIDR0/ SODR0	Serial input data register 0/ serial output data register 0	R/W	UART0 (SCI)	XXXXXXXXB
000023H	SSR0	Serial status register 0	R/W		00001–00B
000024H	SMR1	Serial mode register 1	R/W	UART1 (SCI)	00000000B
000025H	SCR1	Serial control register 1	R/W		00000100B
000026H	SIDR1/ SODR1	Serial input data register 1/ serial output data register 1	R/W		XXXXXXXXB
000027H	SSR1	Serial status register 1	R/W		00001–00B
000028H	CDCR0	Communications prescaler control register 0	R/W	Communica-tions prescaler register 0	0–––1111B
000029H	(Disabled)				
00002AH	CDCR1	Communications prescaler control register 1	R/W	Communica-tions prescaler register 0	0–––1111B
00002BH to 00002FH	(Disabled)				
000030H	ENIR	DTP/interrupt enable register	R/W	DTP/external interrupt circuit	00000000B
000031H	EIRR	DTP/interrupt factor register	R/W		XXXXXXXXB
000032H	ELVR	Request level setting register	R/W		00000000B
000033H					00000000B
000034H	(Disabled)				
000035H					
000036H	ADCS1	A/D control status register lower digits	R/W	8/10-bit A/D converter	00000000B
000037H	ADCS2	A/D control status register upper digits	R/W or W		00000000B
000038H	ADCR1	A/D data register lower digits	R		XXXXXXXXB
000039H	ADCR2	A/D data register upper digits	W		00001–XXB
00003AH	DADR0	D/A converter data register ch.0	R/W	8-bit D/A converter	XXXXXXXXB
00003BH	DADR1	D/A converter data register ch.1	R/W		XXXXXXXXB
00003CH	DACR0	D/A control register 0	R/W		–––––––0B
00003DH	DACR1	D/A control register 1	R/W		–––––––0B
00003EH	CLKR	Clock output enable register	R/W	Clock monitor function	––––0000B
00003FH	(Disabled)				
000040H	PRLL0	PPG0 reload register L ch.0	R/W	8/16-bit PPG timer 0	XXXXXXXXB
000041H	PRLH0	PPG0 reload register H ch.0	R/W		XXXXXXXXB

(Continued)

Address	Abbreviated register name	Register name	Read/ write	Resource name	Initial value
000042H	PRLL1	PPG1 reload register L ch.1	R/W	8/16-bit PPG timer 1	XXXXXXXXB
000043H	PRLH1	PPG1 reload register H ch.1	R/W		XXXXXXXXB
000044H	PPGC0	PPG0 operating mode control register ch.0	R/W	8/16-bit PPG timer 0	0X000XX1B
000045H	PPGC1	PPG1 operating mode control register ch.1	R/W	8/16-bit PPG timer 1	0X000001B
000046H	PPGOE	PPG0 and 1 output control registers ch.0 and ch.1	R/W	8/16-bit PPG timer 0, 1	000000XXB
000047H	(Disabled)				
000048H	SMCSL0	Serial mode control lower status register 0	R/W	Extended I/O serial interface 0	----0000B
000049H	SMCSH0	Serial mode control upper status register 0	R/W		00000010B
00004AH	SDR0	Serial data register 0	R/W		XXXXXXXXB
00004BH	(Disabled)				
00004CH	SMCSL1	Serial mode control lower status register 1	R/W	Extended I/O serial interface 1	----0000B
00004DH	SMCSH1	Serial mode control upper status register 1	R/W		00000010B
00004EH	SDR1	Serial data register 1	R/W		XXXXXXXXB
00004FH	(Disabled)				
000050H	IPCP0	ICU data register ch.0	R	16-bit I/O timer (input capture (ICU) section)	XXXXXXXXB
000051H					XXXXXXXXB
000052H	IPCP1	ICU data register ch.1	R		XXXXXXXXB
000053H					XXXXXXXXB
000054H	ICS01	ICU control status register	R/W		00000000B
000055H	(Disabled)				
000056H	TCDT	Free run timer data register	R/W	16-bit I/O timer (16-bit free run timer section)	00000000B
000057H					00000000B
000058H	TCCS	Free run timer control status register	R/W		00000000B
000059H	(Disabled)				
00005AH	OCCP0	OCU compare register ch.0	R/W	16-bit I/O timer (output compare (OCU) section)	XXXXXXXXB
00005BH					XXXXXXXXB
00005CH	OCCP1	OCU compare register ch.1	R/W		XXXXXXXXB
00005DH					XXXXXXXXB
00005EH	OCCP2	OCU compare register ch.2	R/W		XXXXXXXXB
00005FH					XXXXXXXXB

(Continued)

Address	Abbreviated register name	Register name	Read/ write	Resource name	Initial value
000060H	OCCP3	OCU compare register ch.3	R/W	16-bit I/O timer (output compare (OCU) section)	XXXXXXXXB
000061H					XXXXXXXXB
000062H	OCS0	OCU control status register ch.0	R/W		0000––00B
000063H	OCS1	OCU control status register ch.1	R/W		–––00000B
000064H	OCS2	OCU control status register ch.2	R/W		0000––00B
000065H	OCS3	OCU control status register ch.3	R/W		–––00000B
000066H	(Disabled)				
000067H					
000068H	IBSR	I²C bus status register	R	I²C interface	00000000B
000069H	IBCR	I²C bus control register	R/W		00000000B
00006AH	ICCR	I²C bus clock control register	R/W		––0XXXXXB
00006BH	IADR	I²C bus address register	R/W		–XXXXXXXB
00006CH	IDAR	I²C bus data register	R/W		XXXXXXXXB
00006DH	(Disabled)				
00006EH					
00006FH	ROMM	ROM mirroring function selection register	W	ROM mirroring function selection module	–––––––1B
000070H	UDCR0	Up/down count register 0	R	8/16-bit up/down counter/timer	00000000B
000071H	UDCR1	Up/down count register 1	R		00000000B
000072H	RCR0	Reload compare register 0	W		00000000B
000073H	RCR1	Reload compare register 1	W		00000000B
000074H	CSR0	Counter status register 0	R/W		00000000B
000075H	(Reserved area)*3				
000076H	CCRL0	Counter control register 0	R/W	8/16-bit up/down counter/timer	–0000000B
000077H	CCRH0				00000000B
000078H	CSR1	Counter status register 1	R/W		00000000B
000079H	(Reserved area)*3				
00007AH	CCRL1	Counter control register 1	R/W	8/16-bit up/down counter/timer	–0000000B
00007BH	CCRH1				–0000000B
00007CH	SMCSL2	Serial mode control lower status register 2	R/W	Extended I/O serial interface 2	––––0000B
00007DH	SMCSH2	Serial mode control higher status register 2	R/W		00000010B
00007EH	SDR2	Serial data register 2	R/W		XXXXXXXXB
00007FH	(Disabled)				

(Continued)

Address	Abbreviated register name	Register name	Read/ write	Resource name	Initial value
000080H	CSCR0	Chip selection control register 0	R/W	Chip select output	– – – – 0 0 0 0B
000081H	CSCR1	Chip selection control register 1	R/W		– – – – 0 0 0 0B
000082H	CSCR2	Chip selection control register 2	R/W		– – – – 0 0 0 0B
000083H	CSCR3	Chip selection control register 3	R/W		– – – – 0 0 0 0B
000084H	CSCR4	Chip selection control register 4	R/W		– – – – 0 0 0 0B
000085H	CSCR5	Chip selection control register 5	R/W		– – – – 0 0 0 0B
000086H	CSCR6	Chip selection control register 6	R/W		– – – – 0 0 0 0B
000087H to 00008BH	(Disabled)				
00008CH	RDR0	Port 0 input pull-up resistor setup register	R/W	Port 0	0 0 0 0 0 0 0 0B
00008DH	RDR1	Port 1 input pull-up resistor setup register	R/W	Port 1	0 0 0 0 0 0 0 0B
00008EH	RDR6	Port 6 input pull-up resistor setup register	R/W	Port 6	0 0 0 0 0 0 0 0B
00008FH to 00009DH	(Disabled)				
00009EH	PACSR	Program address detection control status register	R/W	Address match detection function	0 0 0 0 0 0 0 0B
00009FH	DIRR	Delayed interrupt factor generation/ cancellation register	R/W	Delayed interrupt generation module	– – – – – – – 0B
0000A0H	LPMCR	Low-power consumption mode control register	R/W	Low-power consumption (standby) mode	0 0 0 1 1 0 0 0B
0000A1H	CKSCR	Clock select register	R/W		1 1 1 1 1 1 0 0B
0000A2H to 0000A4H	(Disabled)				
0000A5H	ARSR	Automatic ready function select register	W	External bus pin	0 0 1 1 – – 0 0B
0000A6H	HACR	Upper address control register	W		0 0 0 0 0 0 0 0B
0000A7H	ECSR	Bus control signal select register	W		0 0 0 0 0 0 0 0B
0000A8H	WDTC	Watchdog timer control register	R/W	Watchdog timer	X X X X X X X XB
0000A9H	TBTC	Timebase timer control register	R/W	Timebase timer	1 – – 0 0 1 0 0B
0000AAH	WTC	Watch timer control register	R/W	Watch timer	1 X 0 0 0 0 0 0B

(Continued)

(Continued)

Address	Abbreviated register name	Register name	Read/ write	Resource name	Initial value
0000AB$_H$ to 0000AD$_H$	(Disabled)				
0000AE$_H$	FMCS	Flash control register	R/W	Flash interface	0 0 0 X 0 X X 0$_B$
0000AF$_H$	(Disabled)				
0000B0$_H$	ICR00	Interrupt control register 00	R/W	Interrupt controller	0 0 0 0 0 1 1 1$_B$
0000B1$_H$	ICR01	Interrupt control register 01	R/W		0 0 0 0 0 1 1 1$_B$
0000B2$_H$	ICR02	Interrupt control register 02	R/W		0 0 0 0 0 1 1 1$_B$
0000B3$_H$	ICR03	Interrupt control register 03	R/W		0 0 0 0 0 1 1 1$_B$
0000B4$_H$	ICR04	Interrupt control register 04	R/W		0 0 0 0 0 1 1 1$_B$
0000B5$_H$	ICR05	Interrupt control register 05	R/W		0 0 0 0 0 1 1 1$_B$
0000B6$_H$	ICR06	Interrupt control register 06	R/W		0 0 0 0 0 1 1 1$_B$
0000B7$_H$	ICR07	Interrupt control register 07	R/W		0 0 0 0 0 1 1 1$_B$
0000B8$_H$	ICR08	Interrupt control register 08	R/W		0 0 0 0 0 1 1 1$_B$
0000B9$_H$	ICR09	Interrupt control register 09	R/W		0 0 0 0 0 1 1 1$_B$
0000BA$_H$	ICR10	Interrupt control register 10	R/W		0 0 0 0 0 1 1 1$_B$
0000BB$_H$	ICR11	Interrupt control register 11	R/W		0 0 0 0 0 1 1 1$_B$
0000BC$_H$	ICR12	Interrupt control register 12	R/W		0 0 0 0 0 1 1 1$_B$
0000BD$_H$	ICR13	Interrupt control register 13	R/W		0 0 0 0 0 1 1 1$_B$
0000BE$_H$	ICR14	Interrupt control register 14	R/W		0 0 0 0 0 1 1 1$_B$
0000BF$_H$	ICR15	Interrupt control register 15	R/W		0 0 0 0 0 1 1 1$_B$
0000C0$_H$ to 0000FF$_H$	(External area)*1				
000100$_H$ to 000###$_H$	(RAM area)*2				
000###$_H$ to 001FEF$_H$	(Reserved area)*3				
001FF0$_H$	PADR0	Program address detection register 0	R/W	Address match detection function	X X X X X X X X$_B$
001FF1$_H$		Program address detection register 1	R/W		X X X X X X X X$_B$
001FF2$_H$		Program address detection register 2	R/W		X X X X X X X X$_B$
001FF3$_H$	PADR1	Program address detection register 3	R/W		X X X X X X X X$_B$
001FF4$_H$		Program address detection register 4	R/W		X X X X X X X X$_B$
001FF5$_H$		Program address detection register 5	R/W		X X X X X X X X$_B$
001FF6$_H$ to 001FFF$_H$	(Reserved area)				

Descriptions for read/write

R/W : Readable and writable
R : Read only
W : Write only

Descriptions for initial value

0 : The initial value of this bit is “0”.
1 : The initial value of this bit is “1”.
X : The initial value of this bit is undefined.
– : This bit is unused. The initial value is undefined.

*1 : This area is the only external access area having an address of 0000FF$_H$ or lower. An access operation to this area is handled as that to external I/O area.

*2 : For details of the RAM area, see “■ MEMORY MAP”.

*3 : The reserved area is disabled because it is used in the system.

Notes : • For bits that is initialized by an reset operation, the initial value set by the reset operation is listed as an initial value. Note that the values are different from reading results.
For LPMCR/CKSCR/WDTC, there are cases where initialization is performed or not performed, depending on the types of the reset. However initial value for resets that initializes the value are listed.
• The addresses following 0000FF$_H$ are reserved. No external bus access signal is generated.
• Boundary ####$_H$ between the RAM area and the reserved area varies with the product model.

■ INTERRUPT FACTORS, INTERRUPT VECTORS, INTERRUPT CONTROL REGISTER

Interrupt source	EI²OS support	Interrupt vector		Interrupt control register		Priority
		Number	Address	ICR	Address	
Reset	×	# 08	FFFFDC$_H$	—	—	High
INT9 instruction	×	# 09	FFFFD8$_H$	—	—	
Exception	×	# 10	FFFFD4$_H$	—	—	
8/10-bit A/D converter	○	# 11	FFFFD0$_H$	ICR00	0000B0$_H$	
Input capture 0 (ICU) include	○	# 12	FFFFCC$_H$			
DTP0 (external interrupt 0)	○	# 13	FFFFC8$_H$	ICR01	0000B1$_H$	
Input capture 1 (ICU) include	○	# 14	FFFFC4$_H$			
Output compare 0 (OCU) match	○	# 15	FFFFC0$_H$	ICR02	0000B2$_H$	
Output compare 1 (OCU) match	○	# 16	FFFFBC$_H$			
Output compare 2 (OCU) match	○	# 17	FFFFB8$_H$	ICR03	0000B3$_H$	
Output compare 3 (OCU) match	○	# 18	FFFFB4$_H$			
Extended I/O serial interface 0	○	# 19	FFFFB0$_H$	ICR04	0000B4$_H$	
16-bit free run timer	×	# 20	FFFFAC$_H$			
Extended I/O serial interface 1	○	# 21	FFFFA8$_H$	ICR05	0000B5$_H$	
Watch timer	×	# 22	FFFFA4$_H$			
Extended I/O serial interface 2	○	# 23	FFFFA0$_H$	ICR06	0000B6$_H$	
DTP1 (external interrupt 1)	○	# 24	FFFF9C$_H$			
DTP2/DTP3 (external interrupt 2/ external interrupt 3)	○	# 25	FFFF98$_H$	ICR07	0000B7$_H$	
8/16-bit PPG timer 0 counter borrow	×	# 26	FFFF94$_H$			
DTP4/DTP5 (external interrupt 4/ external interrupt 5)	○	# 27	FFFF90$_H$	ICR08	0000B8$_H$	
8/16-bit PPG timer 1 counter borrow	×	# 28	FFFF8C$_H$			
8/16-bit up/down counter/timer 0 borrow/overflow/inversion	○	# 29	FFFF88$_H$	ICR09	0000B9$_H$	
8/16-bit up/down counter/timer 0 compare match	○	# 30	FFFF84$_H$			
8/16-bit up/down counter/timer 1 borrow/overflow/inversion	○	# 31	FFFF80$_H$	ICR10	0000BA$_H$	
8/16-bit up/down counter/timer 1 compare match	○	# 32	FFFF7C$_H$		0000BA$_H$	
DTP6 (external interrupt 6)	○	# 33	FFFF78$_H$	ICR11	0000BB$_H$	
Timebase timer	×	# 34	FFFF74$_H$			Low

(Continued)

(Continued)

Interrupt source	EI²OS support	Interrupt vector		Interrupt control register		Priority
		Number	Address	ICR	Address	
DTP7 (external interrupt 7)	○	# 35	FFFF70H	ICR12	0000BCH	High
I²C interface	×	# 36	FFFF6CH			
UART1 (SCI) reception complete	◎	# 37	FFFF68H	ICR13	0000BDH	
UART1 (SCI) transmission complete	○	# 38	FFFF64H			
UART0 (SCI) reception complete	◎	# 39	FFFF60H	ICR14	0000BEH	
UART0 (SCI) transmission complete	○	# 40	FFFF5CH			
Flash memory	×	# 41	FFFF58H	ICR15	0000BFH	
Delayed interrupt generation module	×	# 42	FFFF54H			Low

○ :Can be used
× :Can not be used
◎ :Can be used. With EI²OS stop function.

■ PERIPHERALS

1. I/O Port

(1) Input/output Port

Port 0 through 4, 6, 8, A and B are general-purpose I/O ports having a combined function as an external bus pin and a resource input. Port 0 to Port 3 have a general-purpose I/O ports function only in the single-chip mode.

- Operation as output port

  The pin is configured as an output port by setting the corresponding bit of the DDR register to “1”.

  Writing data to PDR register when the port is configured as output, the data is retained in the output latch in the PDR and directly output to the pin.

  The value of the pin (the same value retained in the output latch of PDR) can be read out by reading the PDR register.

Note : When a read-modify-write instruction (e.g. bit set instruction) is performed to the port data register, the destination bit of the operation is set to the specified value, not affecting the bits configured by the DDR register for output, however, values of bits configured by the DDR register as inputs are changed because input values to the pins are written into the output latch. To avoid this situation, configure the pins by the DDR register as output after writing output data to the PDR register when configuring the bit used as input as outputs.

- Operation as input port

  The pin is configured as an input by setting the corresponding bit of the DDR register to “0”.

  When the pin is configured as an input, the output buffer is turned-off and the pin is put into a high-impedance status.

  When a data is written into the PDR register, the data is retained in the output latch of the PDR, but pin outputs are unaffected.

  Reading the PDR register reads out the pin level (“0” or “1”).

(2) Register Configuration

- Port 0 data register (PDR0)

Address	bit 15 ··· bit 8	bit 7	bit 6	bit 5	bit 4	bit 3	bit 2	bit 1	bit 0	Initial value
000000H	(PDR1)	P07	P06	P05	P04	P03	P02	P01	P00	XXXXXXXXB
		R/W	R/W	R/W	R/W	R/W	R/W	R/W	R/W	

- Port 1 data register (PDR1)

Address	bit 15	bit 14	bit 13	bit 12	bit 11	bit 10	bit 9	bit 8	bit 7 ··· bit 0	Initial value
000001H	P17	P16	P15	P14	P13	P12	P11	P10	(PDR0)	XXXXXXXXB
	R/W	R/W	R/W	R/W	R/W	R/W	R/W	R/W		

- Port 2 data register (PDR2)

Address	bit 15 ··· bit 8	bit 7	bit 6	bit 5	bit 4	bit 3	bit 2	bit 1	bit 0	Initial value
000002H	(PDR3)	P27	P26	P25	P24	P23	P22	P21	P20	XXXXXXXXB
		R/W	R/W	R/W	R/W	R/W	R/W	R/W	R/W	

- Port 3 data register (PDR3)

Address	bit 15	bit 14	bit 13	bit 12	bit 11	bit 10	bit 9	bit 8	bit 7 ··· bit 0	Initial value
000003H	P37	P36	P35	P34	P33	P32	P31	P30	(PDR2)	XXXXXXXXB
	R/W	R/W	R/W	R/W	R/W	R/W	R/W	R/W		

- Port 4 data register (PDR4)

Address	bit 15 ··· bit 8	bit 7	bit 6	bit 5	bit 4	bit 3	bit 2	bit 1	bit 0	Initial value
000004H	(PDR5)	P47	P46	P45	P44	P43	P42	P41	P40	XXXXXXXXB
		R/W	R/W	R/W	R/W	R/W	R/W	R/W	R/W	

- Port 5 data register (PDR5)

Address	bit 15	bit 14	bit 13	bit 12	bit 11	bit 10	bit 9	bit 8	bit 7 ··· bit 0	Initial value
000005H	P57	P56	P55	P54	P53	P52	P51	P50	(PDR4)	XXXXXXXXB
	R/W	R/W	R/W	R/W	R/W	R/W	R/W	R/W		

- Port 6 data register (PDR6)

Address	bit 15 ··· bit 8	bit 7	bit 6	bit 5	bit 4	bit 3	bit 2	bit 1	bit 0	Initial value
000006H	(PDR7)	P67	P66	P65	P64	P63	P62	P61	P60	XXXXXXXXB
		R/W	R/W	R/W	R/W	R/W	R/W	R/W	R/W	

- Port 7 data register (PDR7)

Address	bit 15	bit 14	bit 13	bit 12	bit 11	bit 10	bit 9	bit 8	bit 7 ··· bit 0	Initial value
000007H	—	—	—	P74	P73	P72	P71	P70	(PDR6)	- - - XXXXXB
	—	—	—	R/W	R/W	R/W	R/W	R/W		

- Port 8 data register (PDR8)

Address	bit 15 ··· bit 8	bit 7	bit 6	bit 5	bit 4	bit 3	bit 2	bit 1	bit 0	Initial value
000008H	(PDR9)	P87	P86	P85	P84	P83	P82	P81	P80	XXXXXXXXB
		R/W	R/W	R/W	R/W	R/W	R/W	R/W	R/W	

(Continued)

- Port 9 data register (PDR9)

Address	bit 15	bit 14	bit 13	bit 12	bit 11	bit 10	bit 9	bit 8	bit 7 ····· bit 0	Initial value
000009H	P97	P96	P95	P94	P93	P92	P91	P90	(PDR8)	XXXXXXXXB
	R/W	R/W	R/W	R/W	R/W	R/W	R/W	R/W		

- Port A data register (PDRA)

Address	bit 15 ····· bit 8	bit 7	bit 6	bit 5	bit 4	bit 3	bit 2	bit 1	bit 0	Initial value
00000AH	(PDRB)	PA7	PA6	PA5	PA4	PA3	PA2	PA1	PA0	XXXXXXXXB
		R/W	R/W	R/W	R/W	R/W	R/W	R/W	R/W	

- Port B data register (PDRB)

Address	bit 15 ····· bit 8	bit 7	bit 6	bit 5	bit 4	bit 3	bit 2	bit 1	bit 0	Initial value
00000BH	(PDRA)	PB7	PB6	PB5	PB4	PB3	PB2	PB1	PB0	XXXXXXXXB
		R/W	R/W	R/W	R/W	R/W	R/W	R/W	R/W	

- Port C data register (PDRC)

Address	bit 15 ····· bit 8	bit 7	bit 6	bit 5	bit 4	bit 3	bit 2	bit 1	bit 0	Initial value
00000CH	(Disabled)	—	—	—	—	PC3	PC2	PC1	PC0	XXXXXXXXB
		—	—	—	—	R/W	R/W	R/W	R/W	

- Port 0 direction register (DDR0)

Address	bit 15 ····· bit 8	bit 7	bit 6	bit 5	bit 4	bit 3	bit 2	bit 1	bit 0	Initial value
000010H	(DDR1)	D07	D06	D05	D04	D03	D02	D01	D00	00000000B
		R/W	R/W	R/W	R/W	R/W	R/W	R/W	R/W	

- Port 1 direction register (DDR1)

Address	bit 15	bit 14	bit 13	bit 12	bit 11	bit 10	bit 9	bit 8	bit 7 ····· bit 0	Initial value
000011H	D17	D16	D15	D14	D13	D12	D11	D10	(DDR0)	00000000B
	R/W	R/W	R/W	R/W	R/W	R/W	R/W	R/W		

- Port 2 direction register (DDR2)

Address	bit 15 ····· bit 8	bit 7	bit 6	bit 5	bit 4	bit 3	bit 2	bit 1	bit 0	Initial value
000012H	(DDR3)	D27	D26	D25	D24	D23	D22	D21	D20	00000000B
		R/W	R/W	R/W	R/W	R/W	R/W	R/W	R/W	

- Port 3 direction register (DDR3)

Address	bit 15	bit 14	bit 13	bit 12	bit 11	bit 10	bit 9	bit 8	bit 7 ····· bit 0	Initial value
000013H	D37	D36	D35	D34	D33	D32	D31	D30	(DDR2)	00000000B
	R/W	R/W	R/W	R/W	R/W	R/W	R/W	R/W		

- Port 4 direction register (DDR4)

Address	bit 15 ····· bit 8	bit 7	bit 6	bit 5	bit 4	bit 3	bit 2	bit 1	bit 0	Initial value
000014H	(DDR5)	D47	D46	D45	D44	D43	D42	D41	D40	00000000B
		R/W	R/W	R/W	R/W	R/W	R/W	R/W	R/W	

(Continued)

- Port 5 direction register (DDR5)

Address	bit 15	bit 14	bit 13	bit 12	bit 11	bit 10	bit 9	bit 8	bit 7 ····· bit 0	Initial value
000015H	D57	D56	D55	D54	D53	D52	D51	D50	(DDR4)	00000000B
	R/W	R/W	R/W	R/W	R/W	R/W	R/W	R/W		

- Port 6 direction register (DDR6)

Address	bit 15 ····· bit 8	bit 7	bit 6	bit 5	bit 4	bit 3	bit 2	bit 1	bit 0	Initial value
000016H	(DDR7)	D67	D66	D65	D64	D63	D62	D61	D60	00000000B
		R/W	R/W	R/W	R/W	R/W	R/W	R/W	R/W	

- Port 7 direction register (DDR7)

Address	bit 15	bit 14	bit 13	bit 12	bit 11	bit 10	bit 9	bit 8	bit 7 ····· bit 0	Initial value
000017H	—	—	—	D74	D73	D72	D71	D70	(DDR6)	---00000B
	—	—	—	R/W	R/W	R/W	R/W	R/W		

- Port 8 direction register (DDR8)

Address	bit 15 ····· bit 8	bit 7	bit 6	bit 5	bit 4	bit 3	bit 2	bit 1	bit 0	Initial value
000018H	(DDR9)	D87	D86	D85	D84	D83	D82	D81	D80	00000000B
		R/W	R/W	R/W	R/W	R/W	R/W	R/W	R/W	

- Port 9 direction register (DDR9)

Address	bit 15	bit 14	bit 13	bit 12	bit 11	bit 10	bit 9	bit 8	bit 7 ····· bit 0	Initial value
000019H	D97	D96	D95	D94	D93	D92	D91	D90	(DDR8)	00000000B
	R/W	R/W	R/W	R/W	R/W	R/W	R/W	R/W		

- Port A direction register (DDRA)

Address	bit 15 ····· bit 8	bit 7	bit 6	bit 5	bit 4	bit 3	bit 2	bit 1	bit 0	Initial value
00001AH	(DDRB)	DA7	DA6	DA5	DA4	DA3	DA2	DA1	DA0	00000000B
		R/W	R/W	R/W	R/W	R/W	R/W	R/W	R/W	

- Port B direction register (DDRB)

Address	bit 15 ····· bit 8	bit 7	bit 6	bit 5	bit 4	bit 3	bit 2	bit 1	bit 0	Initial value
00001BH	(DDRA)	DB7	DB6	DB5	DB4	DB3	DB2	DB1	DB0	00000000B
		R/W	R/W	R/W	R/W	R/W	R/W	R/W	R/W	

- Port C direction register (DDRC)

Address	bit 15 ····· bit 8	bit 7	bit 6	bit 5	bit 4	bit 3	bit 2	bit 1	bit 0	Initial value
00001CH	(ODR4)	—	—	—	—	DC3	DC2	DC1	DC0	00000000B
		—	—	—	—	R/W	R/W	R/W	R/W	

- Port 4 output pin register (ODR4)

Address	bit 15 ····· bit 8	bit 7	bit 6	bit 5	bit 4	bit 3	bit 2	bit 1	bit 0	Initial value
00001DH	(DDRC)	OD47	OD46	OD45	OD44	OD43	OD42	OD41	OD40	00000000B
		R/W	R/W	R/W	R/W	R/W	R/W	R/W	R/W	

- Port 0 input pull-up resistor setup register (RDR0)

Address	bit 15 ····· bit 8	bit 7	bit 6	bit 5	bit 4	bit 3	bit 2	bit 1	bit 0	Initial value
00008CH	(RDR1)	RD07	RD06	RD05	RD04	RD03	RD02	RD01	RD00	00000000B
		R/W	R/W	R/W	R/W	R/W	R/W	R/W	R/W	

(Continued)

(Continued)

- Port 1 input pull-up resistor setup register (RDR1)

Address	bit 15	bit 14	bit 13	bit 12	bit 11	bit 10	bit 9	bit 8	bit 7 ····· bit 0	Initial value
00008D$_H$	RD17	RD16	RD15	RD14	RD13	RD12	RD11	RD10	(RDR0)	00000000$_B$
	R/W	R/W	R/W	R/W	R/W	R/W	R/W	R/W		

- Port 6 input pull-up resistor setup register (RDR6)

Address	bit 15 ····· bit 8	bit 7	bit 6	bit 5	bit 4	bit 3	bit 2	bit 1	bit 0	Initial value
00008E$_H$	(Disabled)	RD67	RD66	RD65	RD64	RD63	RD62	RD61	RD60	00000000$_B$
		R/W	R/W	R/W	R/W	R/W	R/W	R/W	R/W	

- Analog input enable register (ADER)

Address	bit 15 ····· bit 8	bit 7	bit 6	bit 5	bit 4	bit 3	bit 2	bit 1	bit 0	Initial value
00001E$_H$	(Disabled)	ADE7	ADE6	ADE5	ADE4	ADE3	ADE2	ADE1	ADE0	11111111$_B$
		R/W	R/W	R/W	R/W	R/W	R/W	R/W	R/W	

R/W:Readable and writable
—:Reserved
X:Undefined

(3) Block Diagram

- **Input/output port**

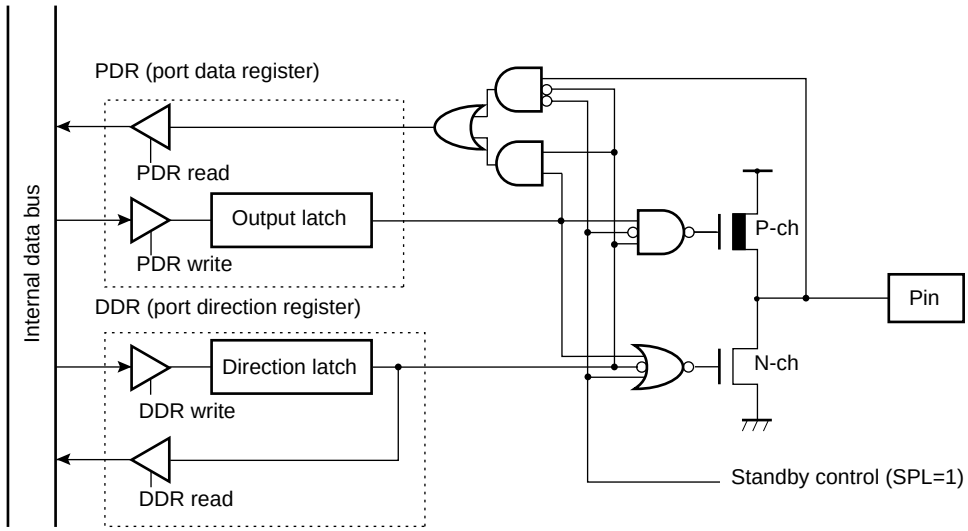

Standby control: Stop, timebase timer mode and SPL=1, or hardware standby mode

- **Output pin register (ODR)**

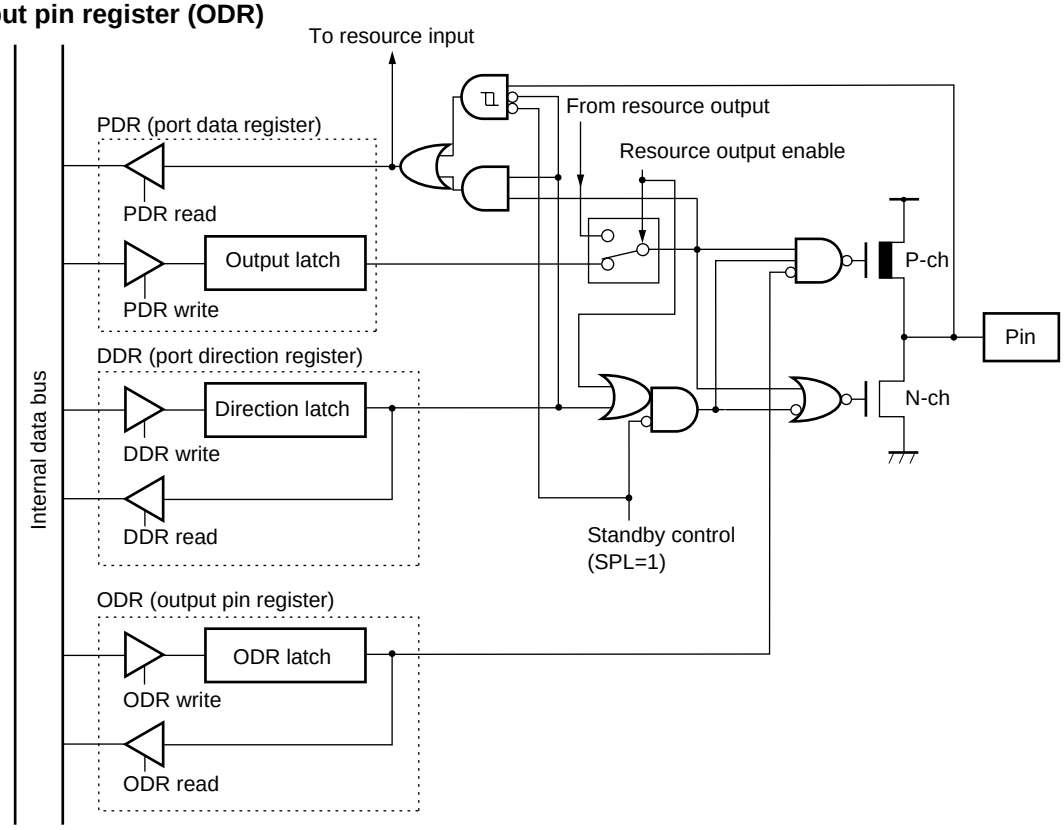

Standby control: Stop, timebase timer mode and SPL=1, or hardware standby mode

- **Input pull-up resistor setup register (RDR)**

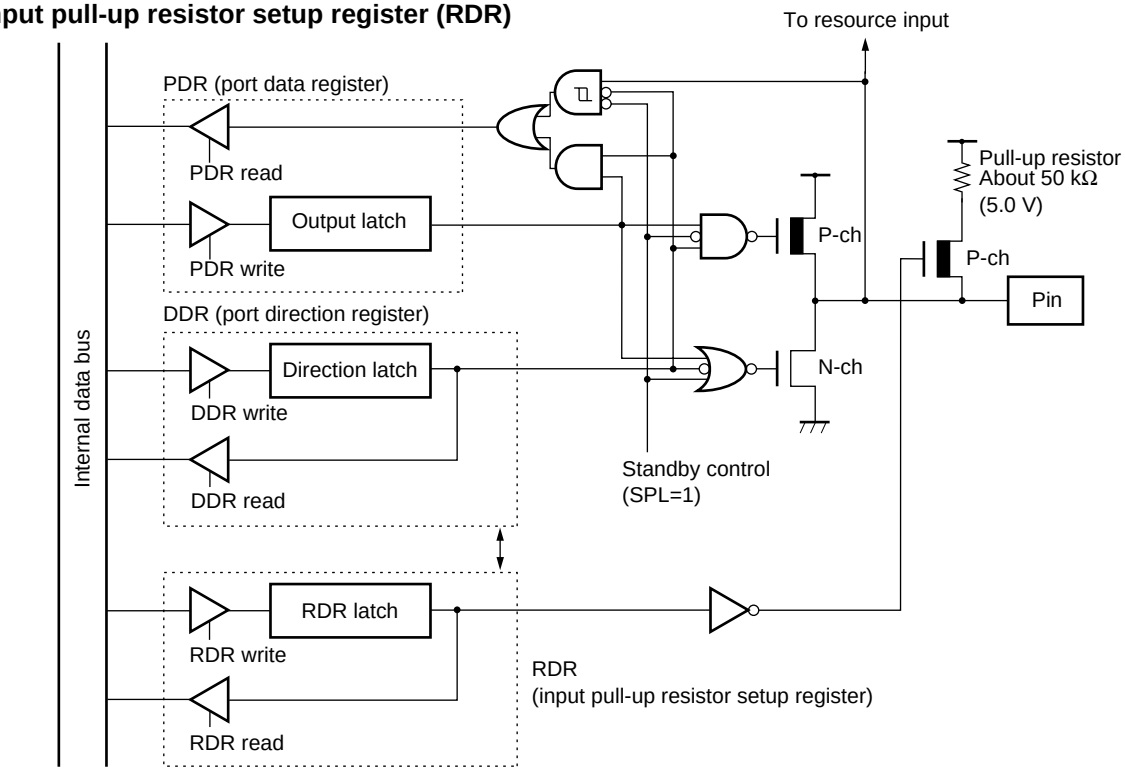

Standby control: Stop, timebase timer mode and SPL=1

- **Analog input enable register (ADER)**

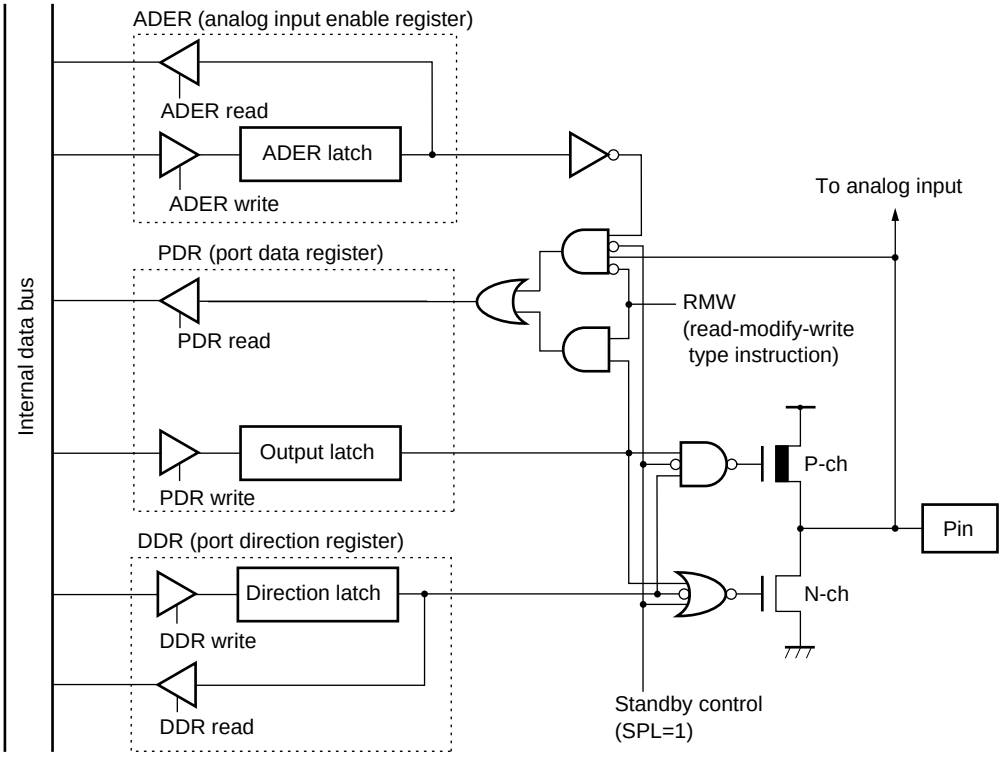

Standby control: Stop, timebase timer mode and SPL=1

2. Timebase Timer

The timebase timer is a 18-bit free run counter (timebase counter) for counting up in synchronization to the internal count clock (divided-by-2 of oscillation) with an interval timer function for selecting an interval time from four types of 2^{12}/HCLK, 2^{14}/HCLK, 2^{16}/HCLK, and 2^{19}/HCLK.

The timebase timer also has a function for supplying operating clocks for the timer output for the oscillation stabilization time or the watchdog timer etc.

(1) Register Configuration

- Timebase timer control register (TBTC)

Address	bit 15	bit 14	bit 13	bit 12	bit 11	bit 10	bit 9	bit 8	bit 7 ····· bit 0	Initial value
0000A9H	RESV	—	—	TBIE	TBOF	TBR	TBC1	TBC0	(WDTC)	1--00100B
	—	—	—	R/W	R/W	W	R/W	R/W		

R/W:Readable and writable
W:Write only
—:Unused
RESV: Reserved bit

(2) Block Diagram

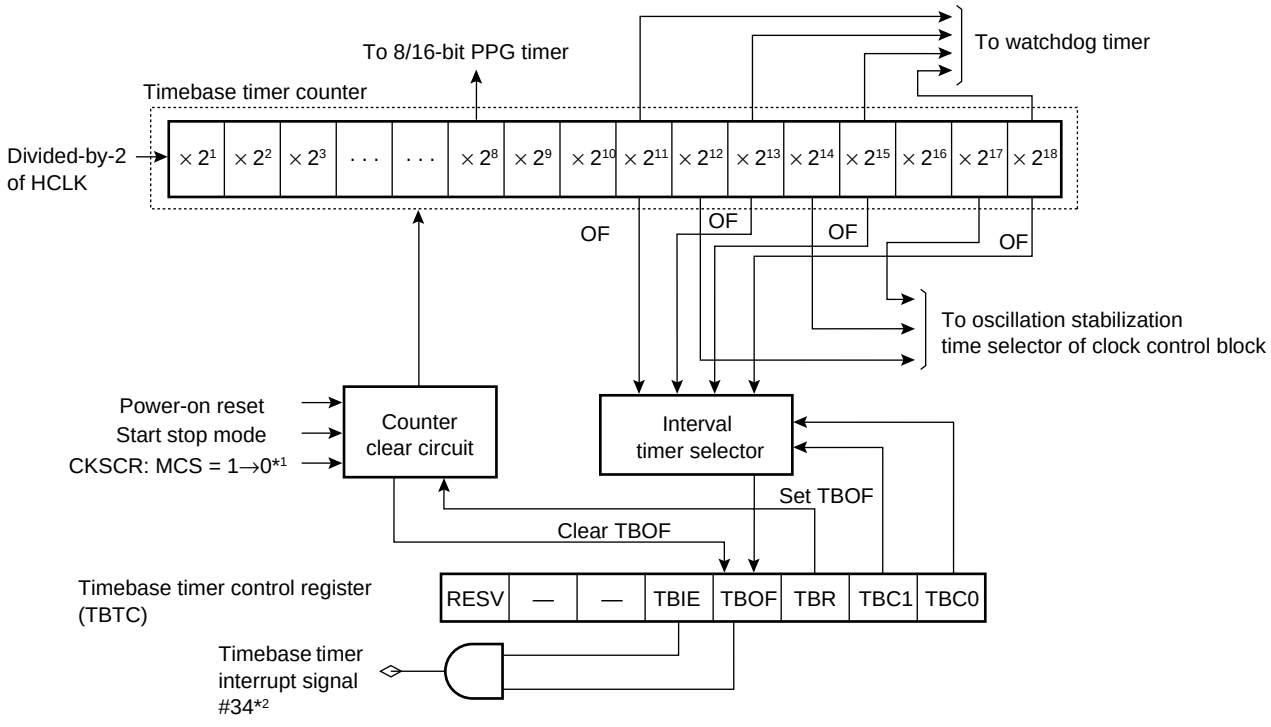

OF: Overflow
HCLK: Oscillation clock
*1: Switch machine clock from oscillation clock to PLL clock
*2: Interrupt signal

3. Watchdog Timer

The watchdog timer is a 2-bit counter operating with an output of the timebase timer and resets the CPU when the counter is not cleared for a preset period of time.

(1) Register Configuration

- Watchdog timer control register (WDTC)

Address	bit 15 ····· bit 8	bit 7	bit 6	bit 5	bit 4	bit 3	bit 2	bit 1	bit 0	Initial value
0000A8H	(TBTC)	PONR	STBR	WRST	ERST	SRST	WTE	WT1	WT0	XXXXXXXXB
		R	R	R	R	R	W	W	W	

R:Read only
W:Write only
X:Indeterminate

(2) Block Diagram

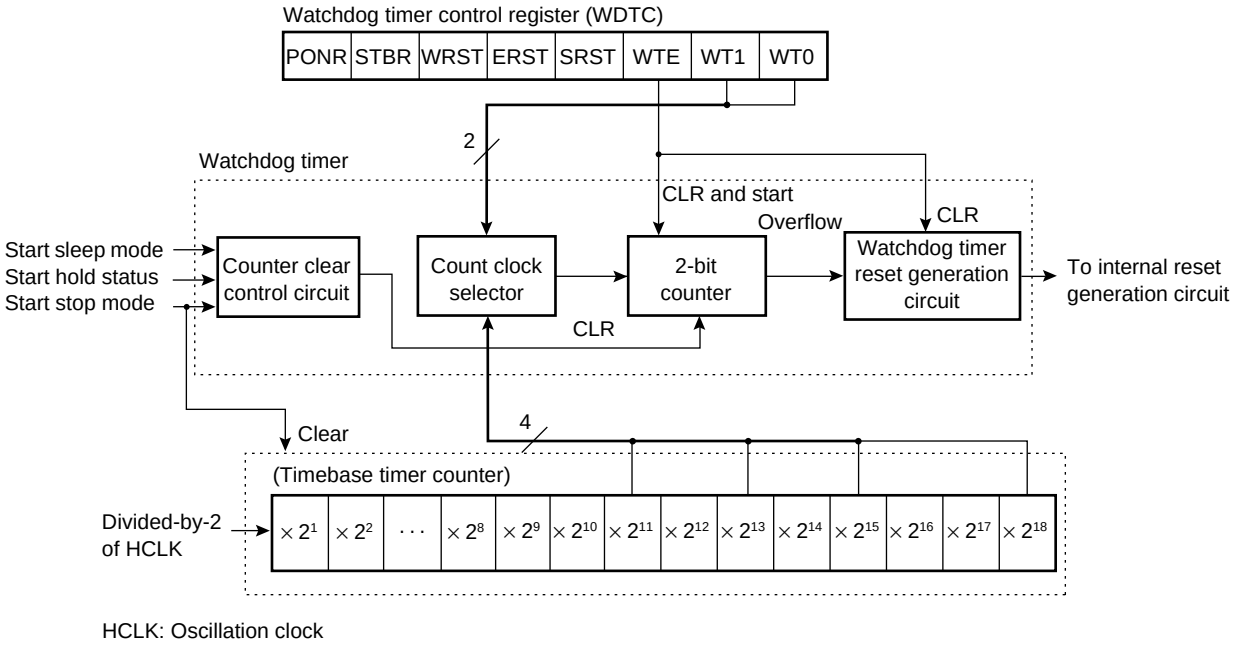

HCLK: Oscillation clock

4. 8/16-bit PPG Timer

The 8/16-bit PPG timer is a 2-CH reload timer module for outputting pulse having given frequencies/duty ratios.

The two modules performs the following operation by combining functions.

- 8-bit PPG output 2-CH independent operation mode
  This is a mode for operating independent 2-CH 8-bit PPG timer, in which PPG0 and PPG1 pins correspond to outputs from PPG0 and PPG1 respectively.
- 16-bit PPG timer output operation mode
  In this mode, PPG0 and PPG1 are combined to be operated as a 1-CH 8/16-bit PPG timer operating as a 16-bit timer. Because PPG0 and PPG1 outputs are reversed by an underflow from PPG1 outputting the same output pulses from PPG0 and PPG1 pins.
- 8 + 8-bit PPG timer output operation mode
  In this mode, PPG0 is operated as an 8-bit communications prescaler, in which an underflow output of PPG0 is used as a clock source for PPG1. A toggle output of PPG0 and PPG output of PPG1 are output from PPG0 and PPG1 respectively.
- PPG output operation
  A pulse wave with any period/duty ratio is output. The module can also be used as a D/A converter with an external add-on circuit.

(1) Register Configuration

- PPG0 operating mode control register ch.0 (PPGC0)

Address	bit 15 ··· bit 8	bit 7	bit 6	bit 5	bit 4	bit 3	bit 2	bit 1	bit 0	Initial value
000044H	(PPGC1)	PEN0	—	PE00	PIE0	PUF0	—	—	RESV	0X000XX1B
		R/W	—	R/W	R/W	R/W	—	—	—	

- PPG1 operating mode control register ch.1 (PPGC1)

Address	bit 15	bit 14	bit 13	bit 12	bit 11	bit 10	bit 9	bit 8	bit 7 ··· bit 0	Initial value
000045H	PEN1	—	PEI0	PIE1	PUF1	MD1	MD0	RESV	(PPGC0)	0X000001B
	R/W	R/W	R/W	R/W	R/W	R/W	R/W	R/W		

- PPG0, 1 output control register ch.0, ch.1(PPGOE)

Address	bit 15 ··· bit 8	bit 7	bit 6	bit 5	bit 4	bit 3	bit 2	bit 1	bit 0	Initial value
000046H	(Disabled)	PCS2	PCS1	PCS0	PCM2	PCM1	PCM0	—	—	000000XXB
		R/W	R/W	R/W	R/W	R/W	R/W	—	—	

- PPG0 reload register H ch.0 (PRLH0)

Address	bit 15	bit 14	bit 13	bit 12	bit 11	bit 10	bit 9	bit 8	bit 7 ··· bit 0	Initial value
000041H									(PRLL0)	XXXXXXXXB
	R/W	R/W	R/W	R/W	R/W	R/W	R/W	R/W		

- PPG1 reload register H ch.1 (PRLH1)

Address	bit 15	bit 14	bit 13	bit 12	bit 11	bit 10	bit 9	bit 8	bit 7 ··· bit 0	Initial value
000043H									(PRLL1)	XXXXXXXXB
	R/W	R/W	R/W	R/W	R/W	R/W	R/W	R/W		

- PPG0 reload register L ch.0 (PRLL0)

Address	bit 15 ··· bit 8	bit 7	bit 6	bit 5	bit 4	bit 3	bit 2	bit 1	bit 0	Initial value
000040H	(PRLH0)									XXXXXXXXB
		R/W	R/W	R/W	R/W	R/W	R/W	R/W	R/W	

- PPG1 reload register L ch.1 (PRLL1)

Address	bit 15 ··· bit 8	bit 7	bit 6	bit 5	bit 4	bit 3	bit 2	bit 1	bit 0	Initial value
000042H	(PRLH1)									XXXXXXXXB
		R/W	R/W	R/W	R/W	R/W	R/W	R/W	R/W	

R/W:Readable and writable
—:Reserved
X:Undefined
RESV: Reserved bit

(2) Block Diagram

- **Block diagram of 8/16-bit PPG timer (ch.0)**

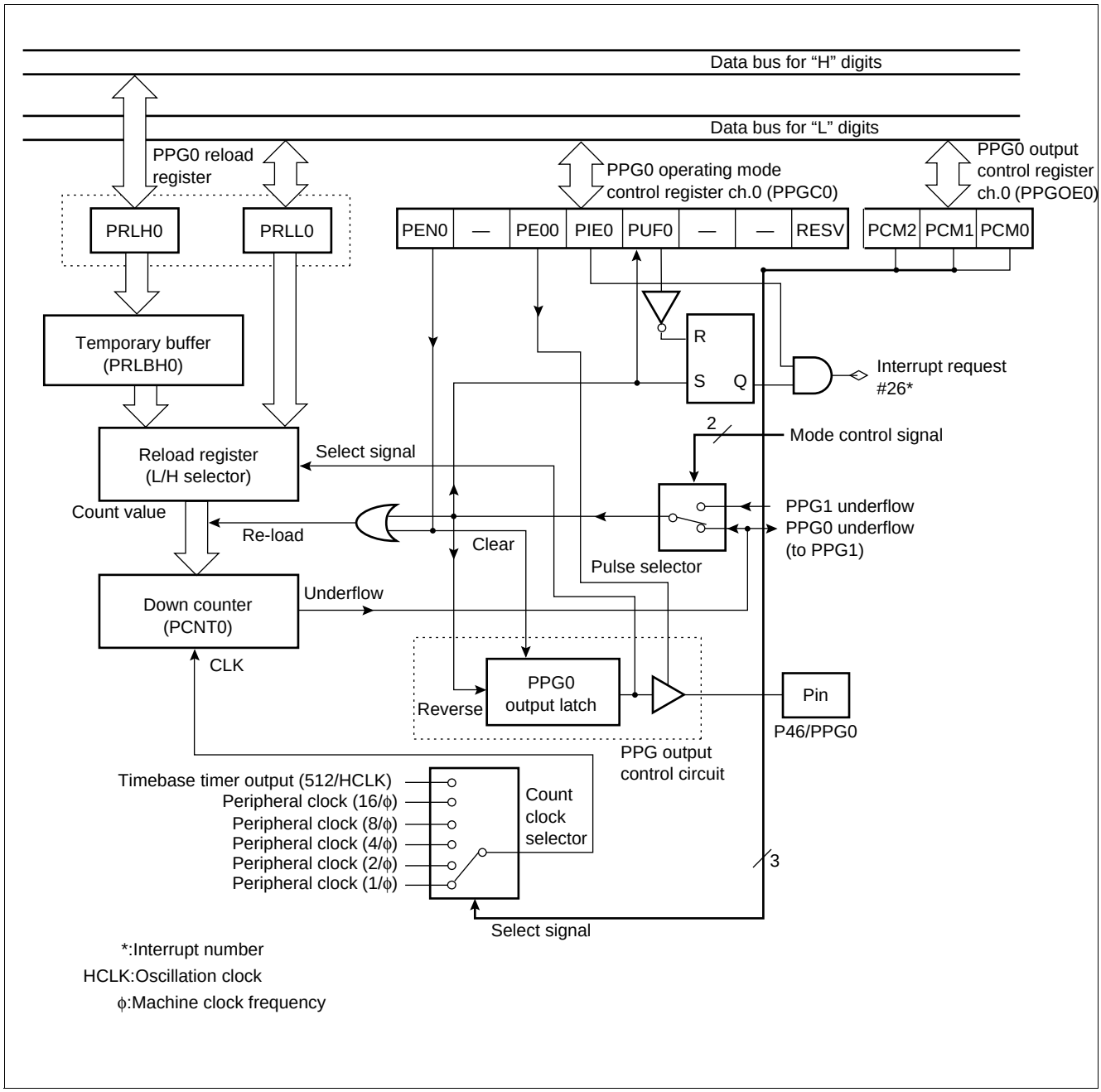

- **Block diagram of 8/16-bit PPG timer (ch.1)**

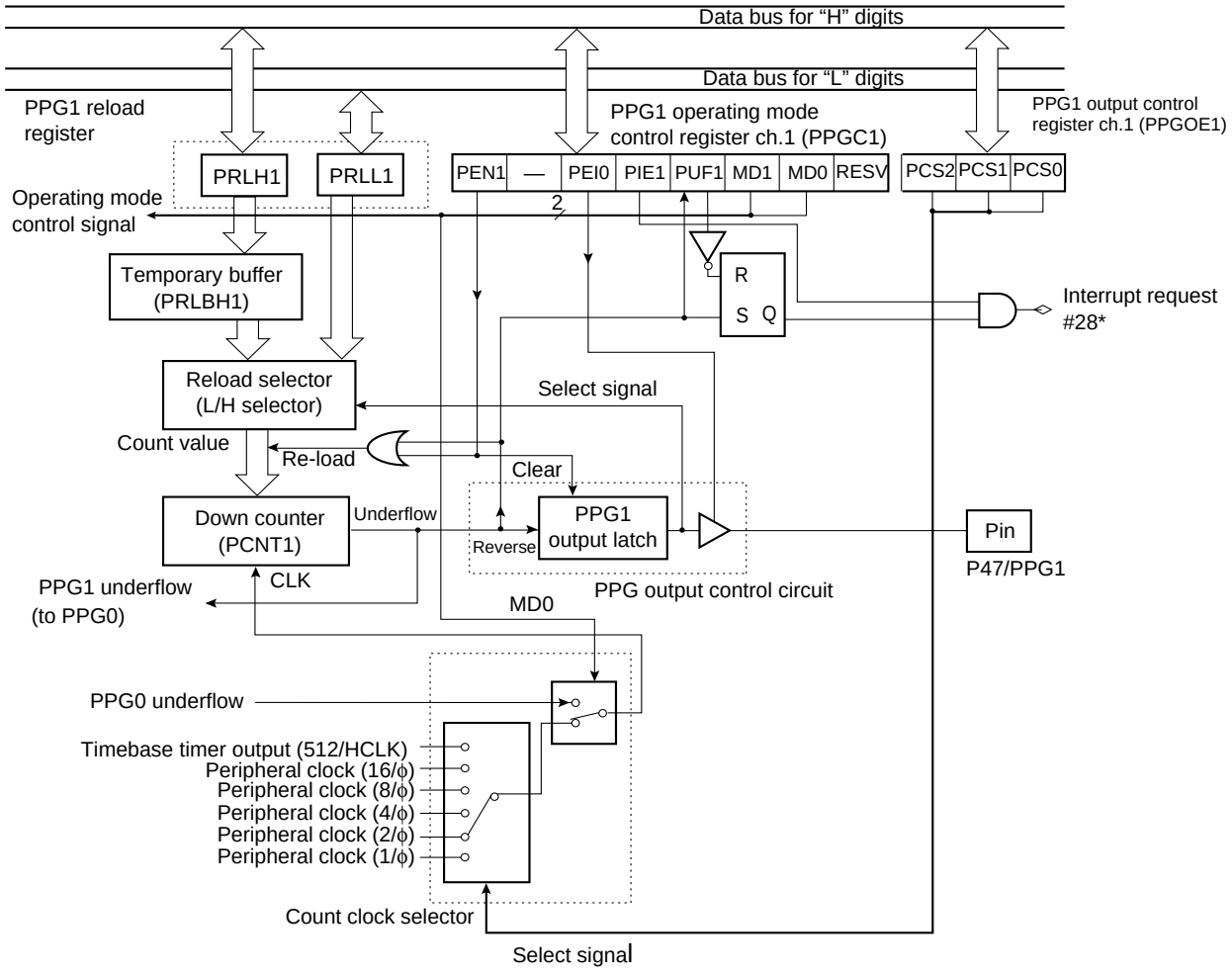

*:Interrupt number
HCLK:Oscillation clock
ϕ:Machine clock frequency

5. 16-bit I/O timer

The 16-bit I/O timer module consists of one 16-bit free run timer, two input capture circuits, and four output comparators. This module allows two independent waveforms to be output on the basis of the 16-bit free run timer. Input pulse width and external clock periods can, therefore, be measured.

- **Block Diagram**

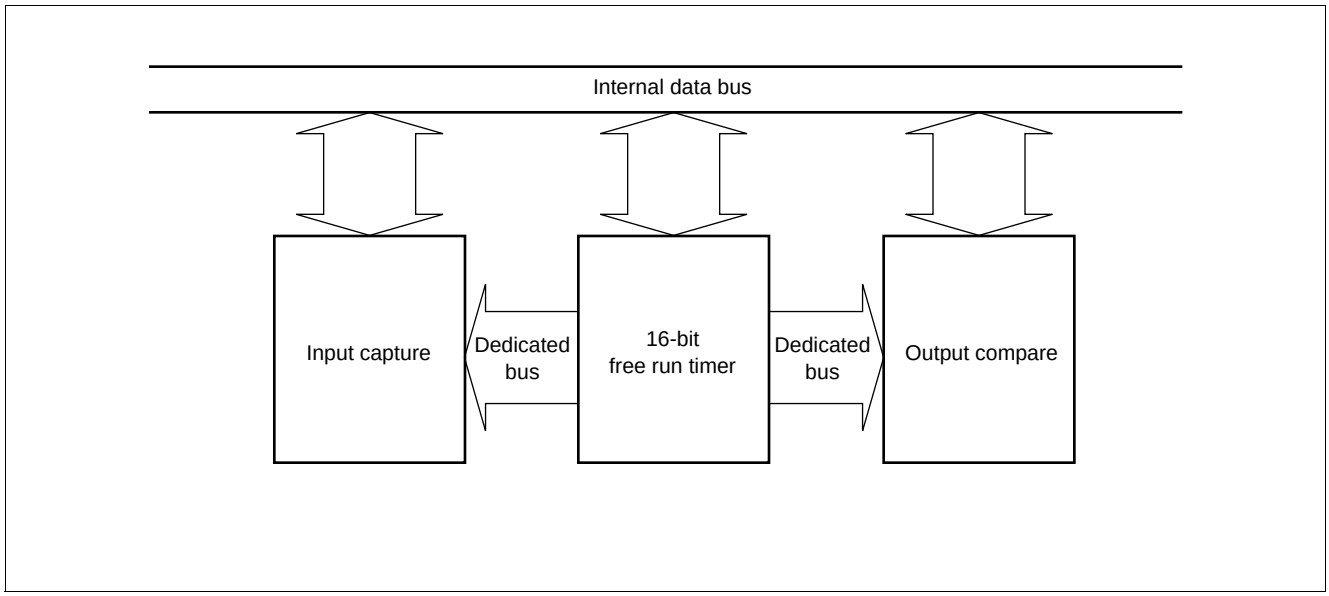

(1) 16-bit free run Timer

The 16-bit free run timer consists of a 16-bit up counter, a control register, and a communications prescaler register. The value output from the timer counter is used as basic timer (base timer) for input capture (ICU) and output compare (OCU).

- A counter operation clock can be selected from four internal clocks (ϕ/4, ϕ/16, ϕ/32 and ϕ/64).
- An interrupt can be generated by overflow of counter value or compare match with OCU compare register 0. (Compare match requires mode setup.)
- The counter value can be initialized to "0000_H" by a reset, software clear or compare match with OCU compare register 0.

- **Register Configuration**

- free run timer data register (TCDT)

Address	bit 15	bit 14	bit 13	bit 12	bit 11	bit 10	bit 9	bit 8	bit 7	bit 6	bit 5	bit 4	bit 3	bit 2	bit 1	bit 0	Initial value
000056_H	T15	T14	T13	T12	T11	T10	T9	T8	T7	T6	T5	T4	T3	T2	T1	T0	00000000_B
000057_H	R/W	R/W	R/W	R/W	R/W	R/W	R/W	R/W	R/W	R/W	R/W	R/W	R/W	R/W	R/W	R/W	

- free run timer control status register (TCCS)

Address	bit 15 ····· bit 8	bit 7	bit 6	bit 5	bit 4	bit 3	bit 2	bit 1	bit 0	Initial value
000058_H	(Disabled)	RESV	IVF	IVFE	STOP	MODE	CLR	CLK1	CLK0	00000000_B
		R/W	R/W	R/W	R/W	R/W	R/W	R/W	R/W	

R/W: Readable and writable
RESV: Reserved bit

- **Block Diagram**

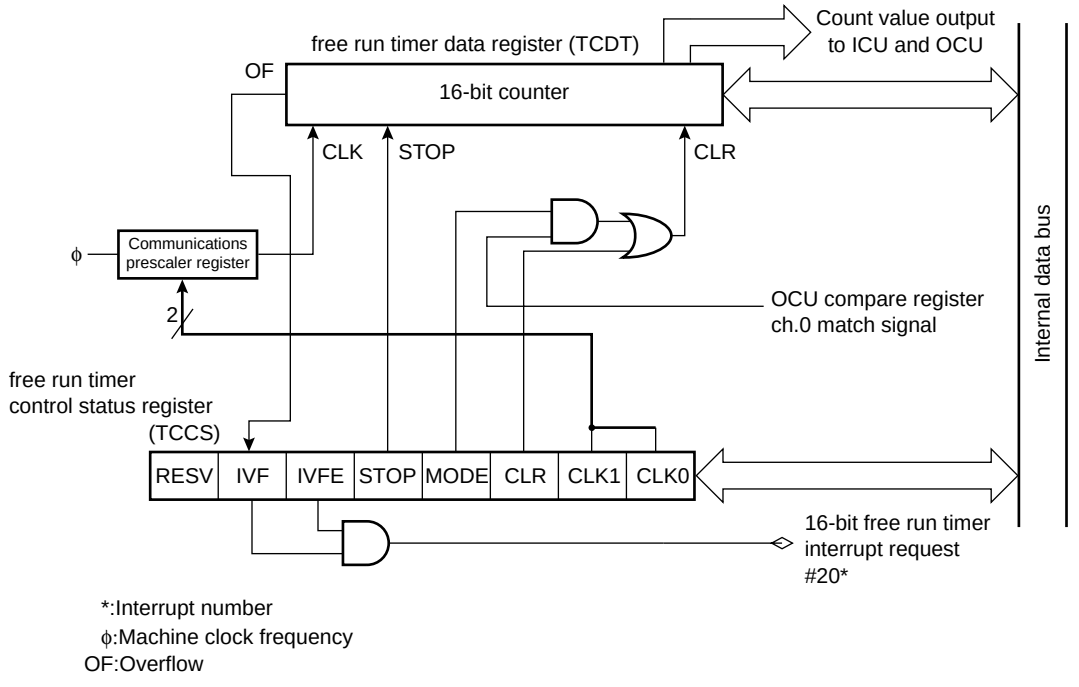

*:Interrupt number
ϕ:Machine clock frequency
OF:Overflow

(2) Input Capture (ICU)

The input capture (ICU) generates an interrupt request to the CPU simultaneously with a storing operation of current counter value of the 16-bit free run timer to the ICU data register (IPCP) upon an input of a trigger edge to the external pin.

There are four sets (four channels) of the input capture external pins and ICU data registers, enabling measurements of maximum of four events.

- The input capture has two sets of external input pins (IN0, IN1) and ICU registers (IPCP), enabling measurements of maximum of four events.
- A trigger edge direction can be selected from rising/falling/both edges.
- The input capture can be set to generate an interrupt request at the storage timing of the counter value of the 16-bit free run timer to the ICU data register (IPCP).
- The input compare conforms to the extended intelligent I/O service (EI^{2}OS).
- The input capture (ICU) function is suited for measurements of intervals (frequencies) and pulse widths.
- **Register Configuration**

- ICU data register ch.0, ch.1 (IPCP0, IPCP1)

	Address	bit 15	bit 14	bit 13	bit 12	bit 11	bit 10	bit 9	bit 8	bit 7 ····· bit 0	Initial value
IPCP0(high):	000051H	CP15	CP14	CP13	CP12	CP11	CP10	CP09	CP08	(IPCP0 low, IPCP1 low)	XXXXXXXXB
IPCP1(high):	000053H	R	R	R	R	R	R	R	R		

	Address	bit 15 ····· bit 8	bit 7	bit 6	bit 5	bit 4	bit 3	bit 2	bit 1	bit 0	Initial value
IPCP0(low):	000050H	(IPCP0 high, IPCP1 high)	CP07	CP06	CP05	CP04	CP03	CP02	CP01	CP00	XXXXXXXXB
IPCP1(low):	000052H		R	R	R	R	R	R	R	R	

Note: This register holds a 16-bit free run timer value when the valid edge of the corresponding external pin input waveform is detected. (You can word-access this register, but you cannot program it.)

- ICU control status register (ICS01)

Address	bit 15 ····· bit 8	bit 7	bit 6	bit 5	bit 4	bit 3	bit 2	bit 1	bit 0	Initial value
000054H	(Disabled)	ICP1	ICP0	ICE1	ICE0	EG11	EG10	EG01	EG00	00000000B
		R/W	R/W	R/W	R/W	R/W	R/W	R/W	R/W	

R/W:Readable and writable
R:Read only
X:Undefined

- **Block Diagram**

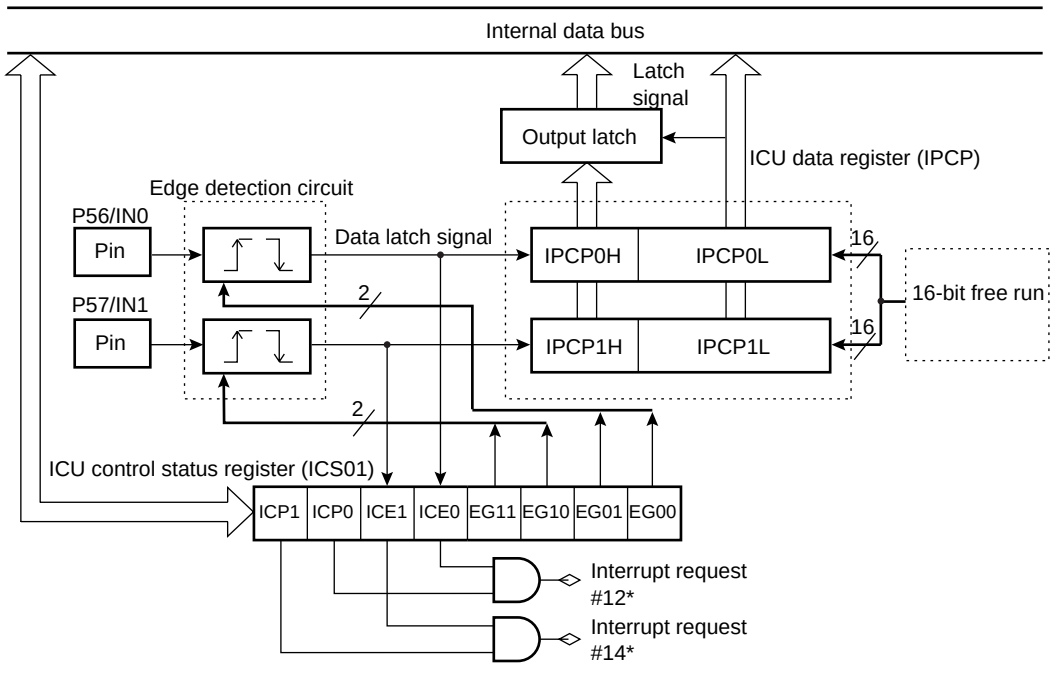

*: Interrupt number

(3) Output Compare (OCU)

The output compare (OCU) is two sets of compare units consisting of four-channel OCU compare registers, a comparator and a control register.

An interrupt request can be generated for each channel upon a match detection by performing time-division comparison between the OCU compare data register setting value and the counter value of the 16-bit free run timer.

The OUT pin can be used as a waveform output pin for reversing output upon a match detection or a general-purpose output port for directly outputting the setting value of the CMOD bit.

- **Register Configuration**

- OCU control status register ch.1, ch.3 (OCS1, OCS3)

Address	bit 15	bit 14	bit 13	bit 12	bit 11	bit 10	bit 9	bit 8	bit 7 ····· bit 0	Initial value
000063H 000065H	—	—	—	CMOD	OTE1	OTE0	OTD1	OTD0	(OCS0, OCS2)	- - - 00000B
	—	—	—	R/W	R/W	R/W	R/W	R/W		

- OCU control status register ch.0, ch.2 (OCS0, OCS2)

Address	bit 15 ····· bit 8	bit 7	bit 6	bit 5	bit 4	bit 3	bit 2	bit 1	bit 0	Initial value
000062H 000064H	(OCS1, OCS3)	ICP1	ICP0	ICE1	ICE0	—	—	CST1	CST0	0000 - - 00B
		R/W	R/W	R/W	R/W	—	—	R/W	R/W	

- OCU compare register ch.0 to ch.3 (OCCP0 to OCCP3)

Address	bit 15	bit 14	bit 13	bit 12	bit 11	bit 10	bit 9	bit 8	Initial value
OCCP0 (high order address): 00005BH OCCP1 (high order address): 00005DH OCCP2 (high order address): 00005FH OCCP3 (high order address): 000061H	C15	C14	C13	C12	C11	C10	C09	C08	XXXXXXXXB
	R/W	R/W	R/W	R/W	R/W	R/W	R/W	R/W	

Address	bit 7	bit 6	bit 5	bit 4	bit 3	bit 2	bit 1	bit 0	Initial value
OCCP0 (low order address): 00005AH OCCP1 (low order address): 00005CH OCCP2 (low order address): 00005EH OCCP3 (low order address): 000060H	C07	C06	C05	C04	C03	C02	C01	C00	XXXXXXXXB
	R/W	R/W	R/W	R/W	R/W	R/W	R/W	R/W	

R/W:Readable and writable
—:Reserved
X:Undefined

- **Block diagram**

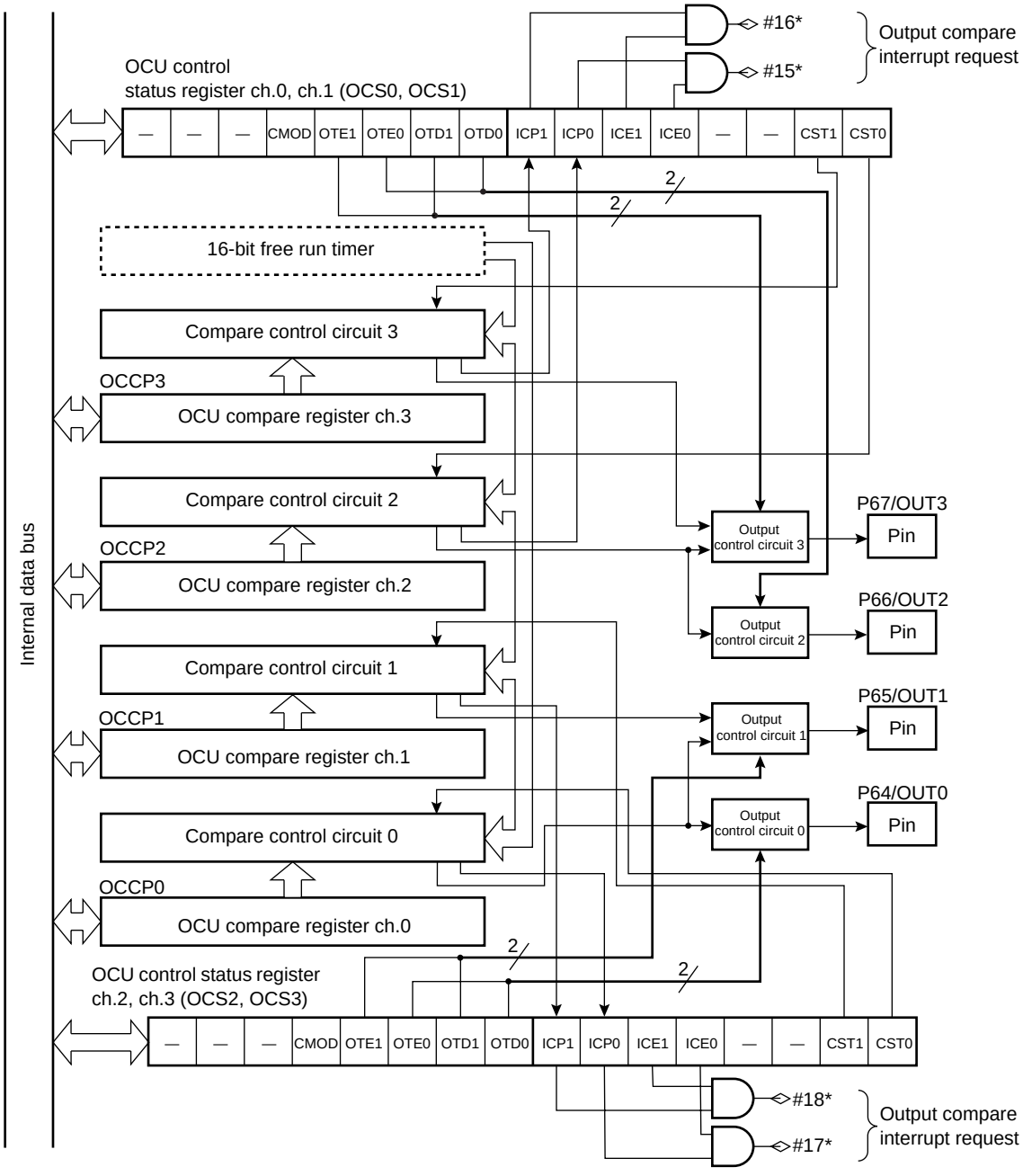

6. 8/16-bit up/down counter/timer

The 8/16-bit up/down counter/timer consists of six event input pins, two 8-bit up/down counters, two 8-bit reload compare registers, and their controllers.

(1) Register configuration

- Up/down count register 0 (UDCR0)

Address	bit 15 ····· bit 8	bit 7	bit 6	bit 5	bit 4	bit 3	bit 2	bit 1	bit 0	Initial value
000070H	(UDCR1)	D07	D06	D05	D04	D03	D02	D01	D00	00000000B
		R	R	R	R	R	R	R	R	

- Up/down count register 1 (UDCR1)

Address	bit 15	bit 14	bit 13	bit 12	bit 11	bit 10	bit 9	bit 8	bit 7 ····· bit 0	Initial value
000071H	D17	D16	D15	D14	D13	D12	D11	D10	(UDCR0)	00000000B
	R	R	R	R	R	R	R	R		

- Reload compare register 0 (RCR0)

Address	bit 15 ····· bit 8	bit 7	bit 6	bit 5	bit 4	bit 3	bit 2	bit 1	bit 0	Initial value
000072H	(RCR1)	D07	D06	D05	D04	D03	D02	D01	D00	00000000B
		W	W	W	W	W	W	W	W	

- Reload compare register 1 (RCR1)

Address	bit 15	bit 14	bit 13	bit 12	bit 11	bit 10	bit 9	bit 8	bit 7 ····· bit 0	Initial value
000073H	D17	D16	D15	D14	D13	D12	D11	D10	(RCR0)	00000000B
	W	W	W	W	W	W	W	W		

- Counter status register 0, 1 (CSR0, CSR1)

Address	bit 15 ····· bit 8	bit 7	bit 6	bit 5	bit 4	bit 3	bit 2	bit 1	bit 0	Initial value
000074H 000078H	(Reserved area)	CSTR	CITE	UDIE	CMPF	OVFF	UDFF	UDF1	UDF0	00000000B
		R/W	R/W	R/W	R/W	R/W	R/W	R	R	

- Counter control register 0, 1 (CCRL0, CCRL1)

Address	bit 15 ····· bit 8	bit 7	bit 6	bit 5	bit 4	bit 3	bit 2	bit 1	bit 0	Initial value
000076H 00007AH	(CCRH0, CCRH1)	—	CTUT	UCRE	RLDE	UDCC	CGSC	CGE1	CGE0	-0000000B
		—	R/W	R/W	R/W	R/W	R/W	R/W	R/W	

- Counter control register 0 (CCRH0)

Address	bit 15	bit 14	bit 13	bit 12	bit 11	bit 10	bit 9	bit 8	bit 7 ····· bit 0	Initial value
000077H	M16E	CDCF	CFIE	CLKS	CMS1	CMS0	CES1	CES0	(CCRL0)	00000000B
	R/W	R/W	R/W	R/W	R/W	R/W	R/W	R/W		

- Counter control register 1 (CCRH1)

Address	bit 15	bit 14	bit 13	bit 12	bit 11	bit 10	bit 9	bit 8	bit 7 ····· bit 0	Initial value
00007BH	—	CDCF	CFIE	CLKS	CMS1	CMS0	CES1	CES0	(CCRL1)	-0000000B
	—	R/W	R/W	R/W	R/W	R/W	R/W	R/W		

R/W:Readable and writable
R:Read only
W:Write only
—:Undefined

(2) Block Diagram

- **Block diagram of 8/16-bit up/down counter/timer 0**

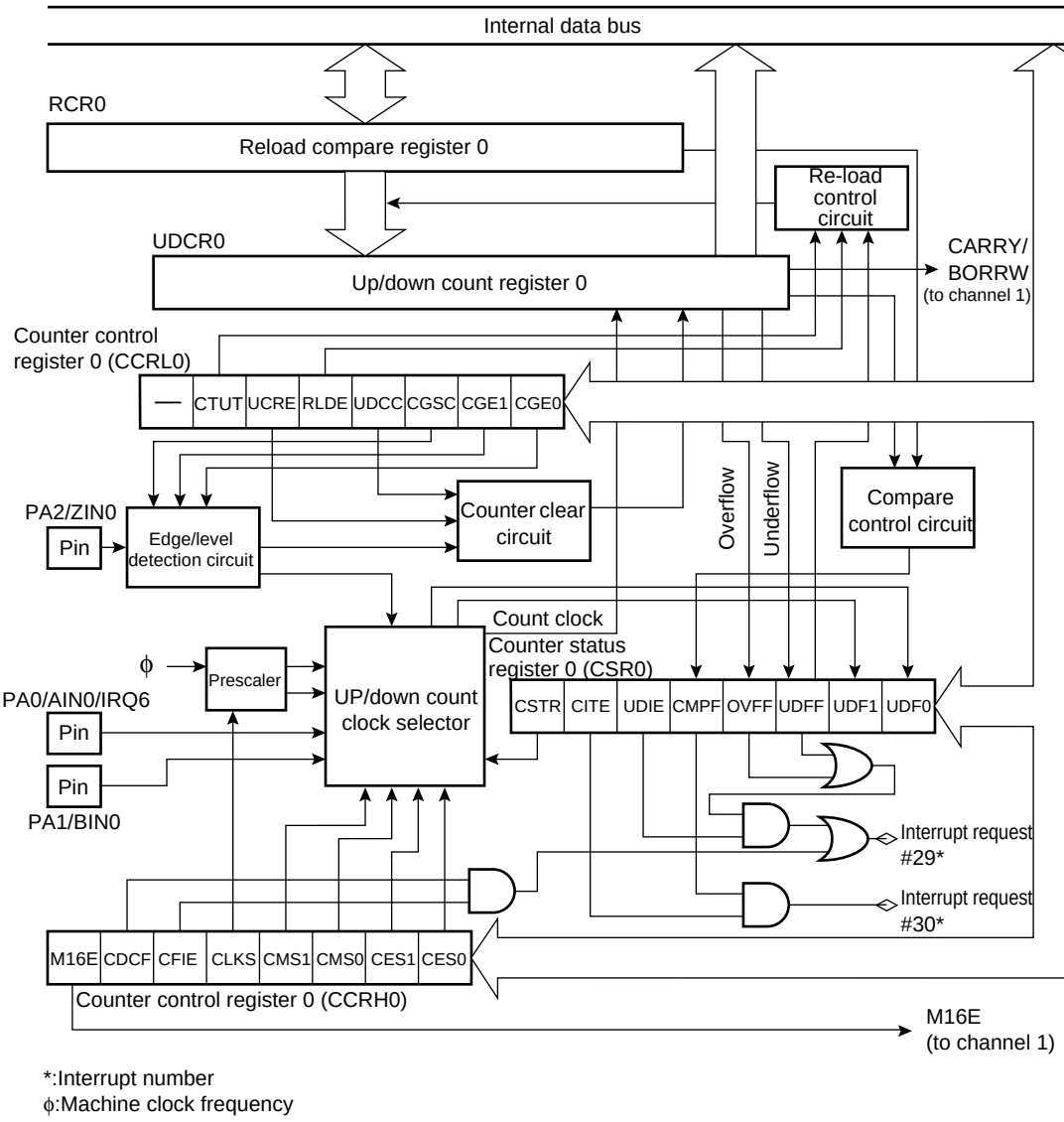

- **Block diagram of 8/16-bit up/down counter/timer 1**

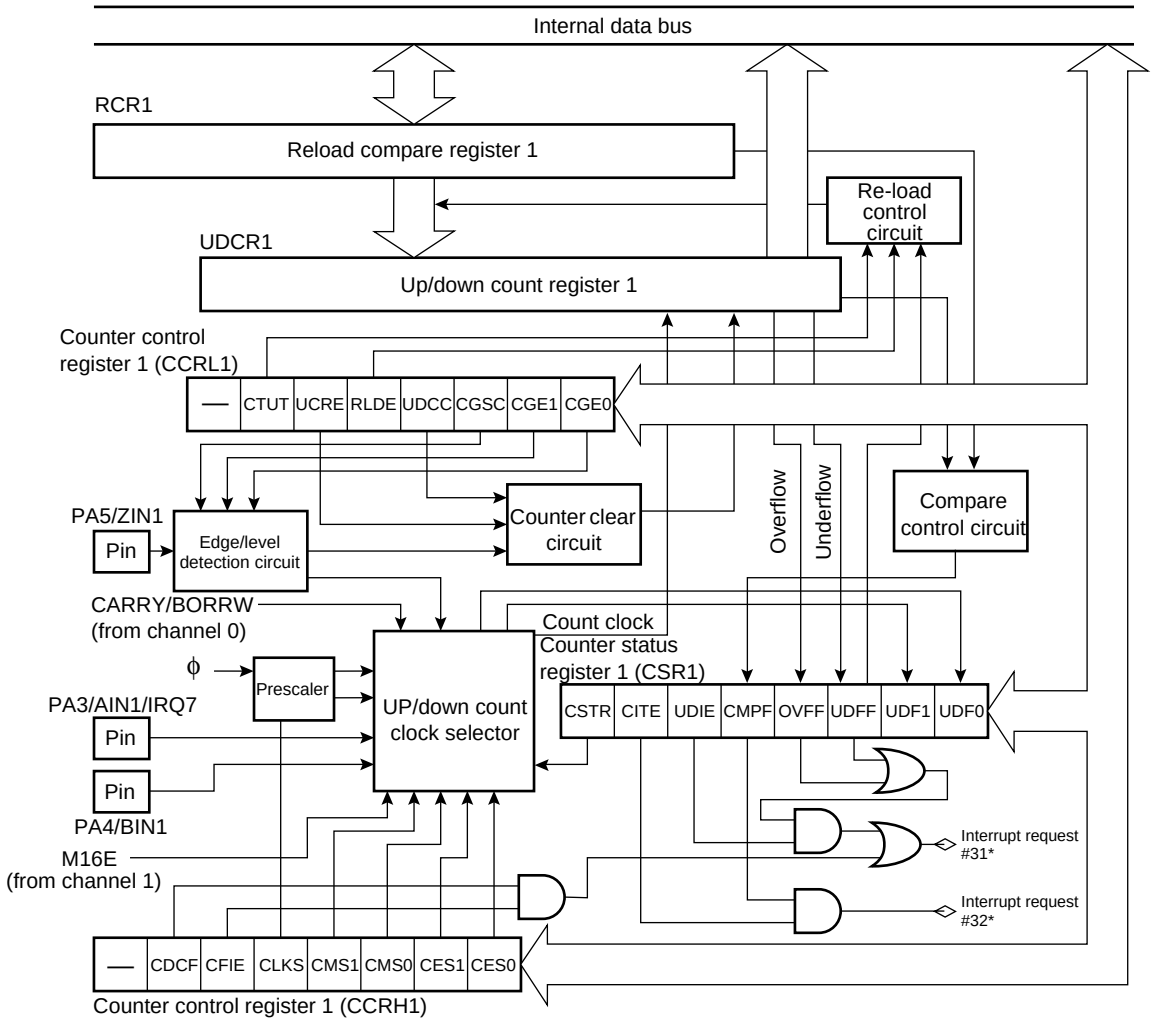

7. Extended I/O serial interface

The extended I/O serial interface transfers data using a clock synchronization system having an 8-bit x 1 channel configuration.

For data transfer, you can select LSB first/MSB first.

(1) Register Configuration

- Serial mode control upper status register 0 to 2 (SMCSH0 to SMCSH2)

Address	bit 15	bit 14	bit 13	bit 12	bit 11	bit 10	bit 9	bit 8	bit 7 ····· bit 0	Initial value
SMCSH0: 000049H	SMD2	SMD1	SMD0	SIE	SIR	BUSY	STOP	STRT	(SMCSL)	00000010B
SMCSH1: 00004DH										
SMCSH2: 00007DH	R/W	R/W	R/W	R/W	R/W	R	R/W	R/W		

- Serial mode control lower status register 0 to 2 (SMCSL0 to SMCSL2)

Address	bit 15 ····· bit 8	bit 7	bit 6	bit 5	bit 4	bit 3	bit 2	bit 1	bit 0	Initial value
SMCSL0: 000048H	(SMCSH)	—	—	—	—	MODE	BDS	SOE	SCOE	----0000B
SMCSL1: 00004CH										
SMCSL2: 00007CH		—	—	—	—	R/W	R/W	R/W	R/W	

- Serial data register 0 to 2 (SDR0 to SDR2)

Address	bit 15 ····· bit 8	bit 7	bit 6	bit 5	bit 4	bit 3	bit 2	bit 1	bit 0	Initial value
SDR0: 00004AH	(Disabled)	D7	D6	D5	D4	D3	D2	D1	D0	XXXXXXXXB
SDR1: 00004EH										
SDR2: 00007EH		R/W	R/W	R/W	R/W	R/W	R/W	R/W	R/W	

R/W:Readable and writable
R:Read only
—:Reserved
X:Undefined

(2) Block Diagram

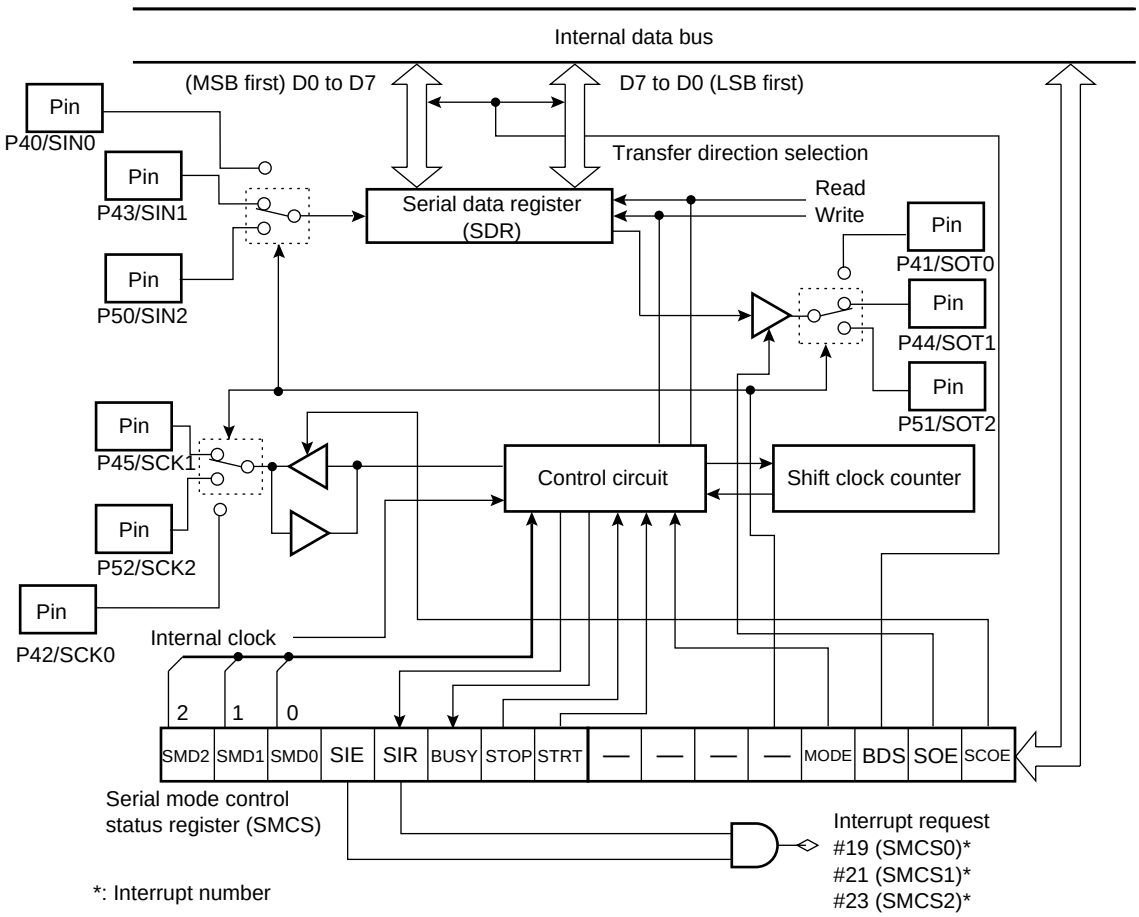

8. I²C Interface

The I²C interface is a serial I/O port supporting Inter IC BUS operating as master/slave devices on I²C bus.

The MB90570A/570C series contains one channel of an I²C interface, having the following features.

- Master/slave transmission/reception
- Arbitration function
- Clock synchronization function
- Slave address/general call address detection function
- Transmission direction detection function
- Repeated generation function start condition and detection function
- Bus error detection function

(1) Register Configuration

- I²C bus status register (IBSR)

Address	bit 15 ··· bit 8	bit 7	bit 6	bit 5	bit 4	bit 3	bit 2	bit 1	bit 0	Initial value
000068H	(IBCR)	BB	RSC	AL	LRB	TRX	AAS	GCA	FBT	00000000B
		R	R	R	R	R	R	R	R	

- I²C bus control register (IBCR)

Address	bit 15	bit 14	bit 13	bit 12	bit 11	bit 10	bit 9	bit 8	bit 7 ··· bit 0	Initial value
000069H	BER	BEIE	SCC	MSS	ACK	GCAA	INTE	INT	(IBSR)	00000000B
	R/W	R/W	R/W	R/W	R/W	R/W	R/W	R/W		

- I²C bus clock control register (ICCR)

Address	bit 15 ··· bit 8	bit 7	bit 6	bit 5	bit 4	bit 3	bit 2	bit 1	bit 0	Initial value
00006AH	(IADR)	—	—	EN	CS4	CS3	CS2	CS1	CS0	--0XXXXXB
		—	—	R/W	R/W	R/W	R/W	R/W	R/W	

- I²C bus address register (IADR)

Address	bit 15	bit 14	bit 13	bit 12	bit 11	bit 10	bit 9	bit 8	bit 7 ··· bit 0	Initial value
00006BH	—	A6	A5	A4	A3	A2	A1	A0	(ICCR)	-XXXXXXXB
	—	R/W	R/W	R/W	R/W	R/W	R/W	R/W		

- I²C bus data register (IDAR)

Address	bit 15 ··· bit 8	bit 7	bit 6	bit 5	bit 4	bit 3	bit 2	bit 1	bit 0	Initial value
00006CH	(Disabled)	D7	D6	D5	D4	D3	D2	D1	D0	XXXXXXXXB
		R/W	R/W	R/W	R/W	R/W	R/W	R/W	R/W	

R/W: Readable and writable
R: Read only
—: Reserved
X: Indeterminate

(2) Block Diagram

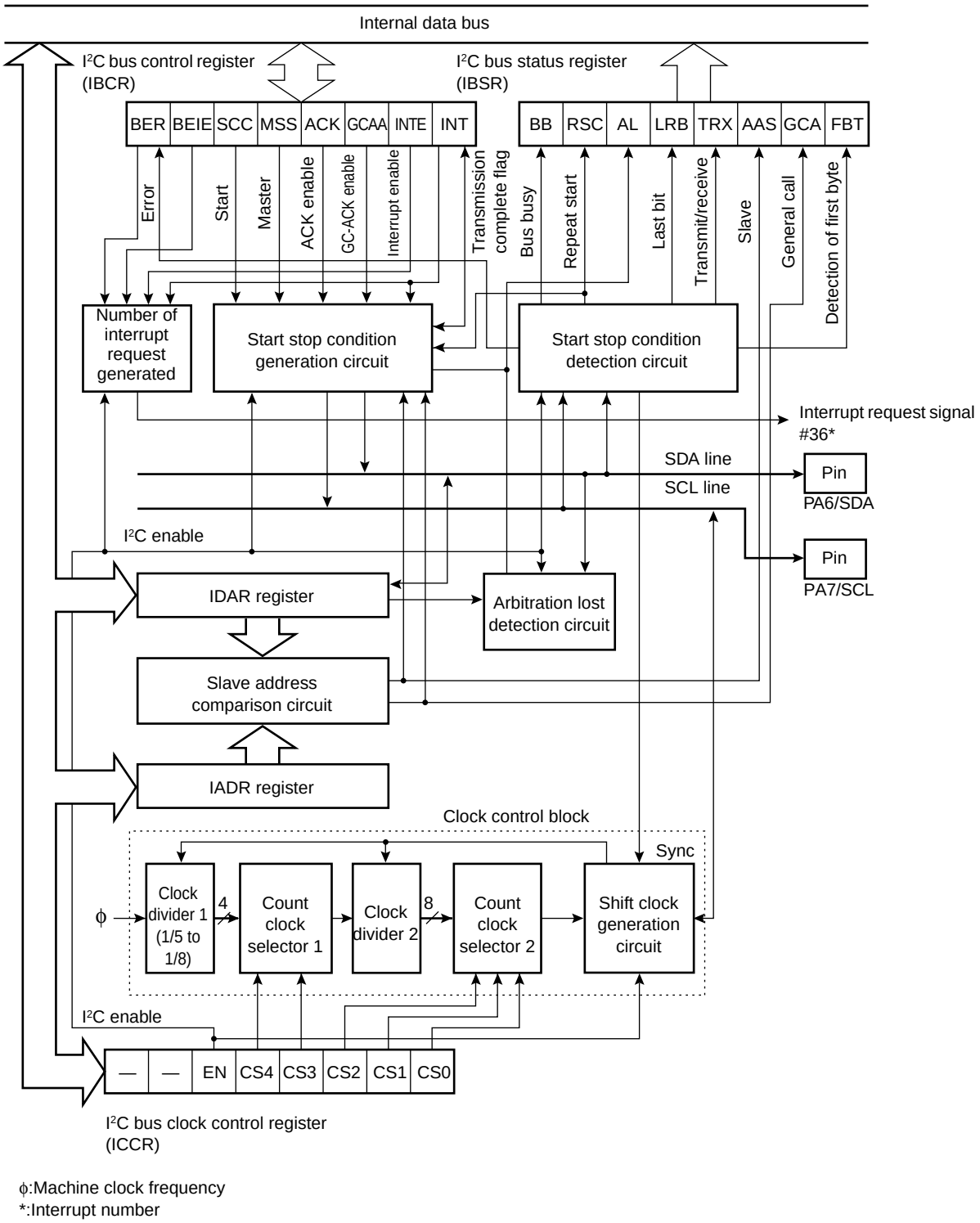

ϕ:Machine clock frequency
*:Interrupt number

9. UART0 (SCI), UART1 (SCI)

UART0 (SCI) and UART1 (SCI) are general-purpose serial data communication interfaces for performing synchronous or asynchronous communication (start-stop synchronization system).

- Data buffer: Full-duplex double buffer
- Transfer mode: Clock synchronized (with start and stop bit)
  Clock asynchronized (start-stop synchronization system)
- Baud rate: Embedded dedicated baud rate generator
  External clock input possible
  Internal clock (a clock supplied from 8-bit PPG timer ch1 or 16-bit PPG timer can be used.)
  Asynchronization 9615 bps/31250 bps/4808 bps/2404 bps/1202 bps
  CLK synchronization 1 Mbps/500 kbps/250 kbps/125 kbps/62.5 kbps
  } Internal machine clock For 6 MHz, 8 MHz, 10 MHz 12 MHz and 16 MHz
- Data length: 7 bit to 9 bit selective (without a parity bit)
  6 bit to 8 bit selective (with a parity bit)
- Signal format: NRZ (Non Return to Zero) system
- Reception error detection: Framing error
  Overrun error
  Parity error (multi-processor mode is supported, enabling setup of any baud rate by an external clock.)
- Interrupt request: Receive interrupt (receive complete, receive error detection)
  Transmit interrupt (transmission complete)
  Transmit/receive conforms to extended intelligent I/O service (EI^{2}OS)

(1) Register Configuration

- Serial control register 0,1 (SCR0, SCR1)

Address	bit 15	bit 14	bit 13	bit 12	bit 11	bit 10	bit 9	bit 8	bit 7 ····· bit 0	Initial value
000021H 000025H	PEN	P	SBL	CL	A/D	REC	RXE	TXE	(SMR0, SMR1)	00000100B
	R/W	R/W	R/W	R/W	R/W	W	R/W	R/W		

- Serial mode register 0, 1 (SMR0, SMR1)

Address	bit 15 ····· bit 8	bit 7	bit 6	bit 5	bit 4	bit 3	bit 2	bit 1	bit 0	Initial value
000020H 000024H	(SCR0, SCR1)	MD1	MD0	CS2	CS1	CS0	RESV	SCKE	SOE	00000000B
		R/W	R/W	R/W	R/W	R/W	R/W	R/W	R/W	

- Serial status register 0,1 (SSR0, SSR1)

Address	bit 15	bit 14	bit 13	bit 12	bit 11	bit 10	bit 9	bit 8	bit 7 ····· bit 0	Initial value
000023H 000027H	PE	ORE	FRE	RDRF	TRDE	—	RIE	TIE	(SIDR0, SIDR1/SODR0,SODR1)	00001-00B
	R	R	R	R	R	—	R/W	R/W		

- Serial input data register 0,1 (SIDR0, SIDR1)

Address	bit 15 ····· bit 8	bit 7	bit 6	bit 5	bit 4	bit 3	bit 2	bit 1	bit 0	Initial value
000022H 000026H	(SSR0, SSR1)	D7	D6	D5	D4	D3	D2	D1	D0	XXXXXXXXB
		R	R	R	R	R	R	R	R	

- Serial output data register 0,1 (SODR0, SODR1)

Address	bit 15 ····· bit 8	bit 7	bit 6	bit 5	bit 4	bit 3	bit 2	bit 1	bit 0	Initial value
000022H 000026H	(SSR0, SSR1)	D7	D6	D5	D4	D3	D2	D1	D0	XXXXXXXXB
		W	W	W	W	W	W	W	W	

- Communications prescaler control register 0,1 (CDCR0, CDCR1)

Address	bit 15 ····· bit 8	bit 7	bit 6	bit 5	bit 4	bit 3	bit 2	bit 1	bit 0	Initial value
000028H 00002AH	(Disabled)	MD	—	—	—	DIV3	DIV2	DIV1	DIV0	0---1111B
		R/W	—	—	—	R/W	R/W	R/W	R/W	

R/W :Readable and writable
R :Read only
W :Write only
— :Reserved
X :Undefined
RESV: Reserved bit

(2) Block Diagram

- **UART0 (SCI)**

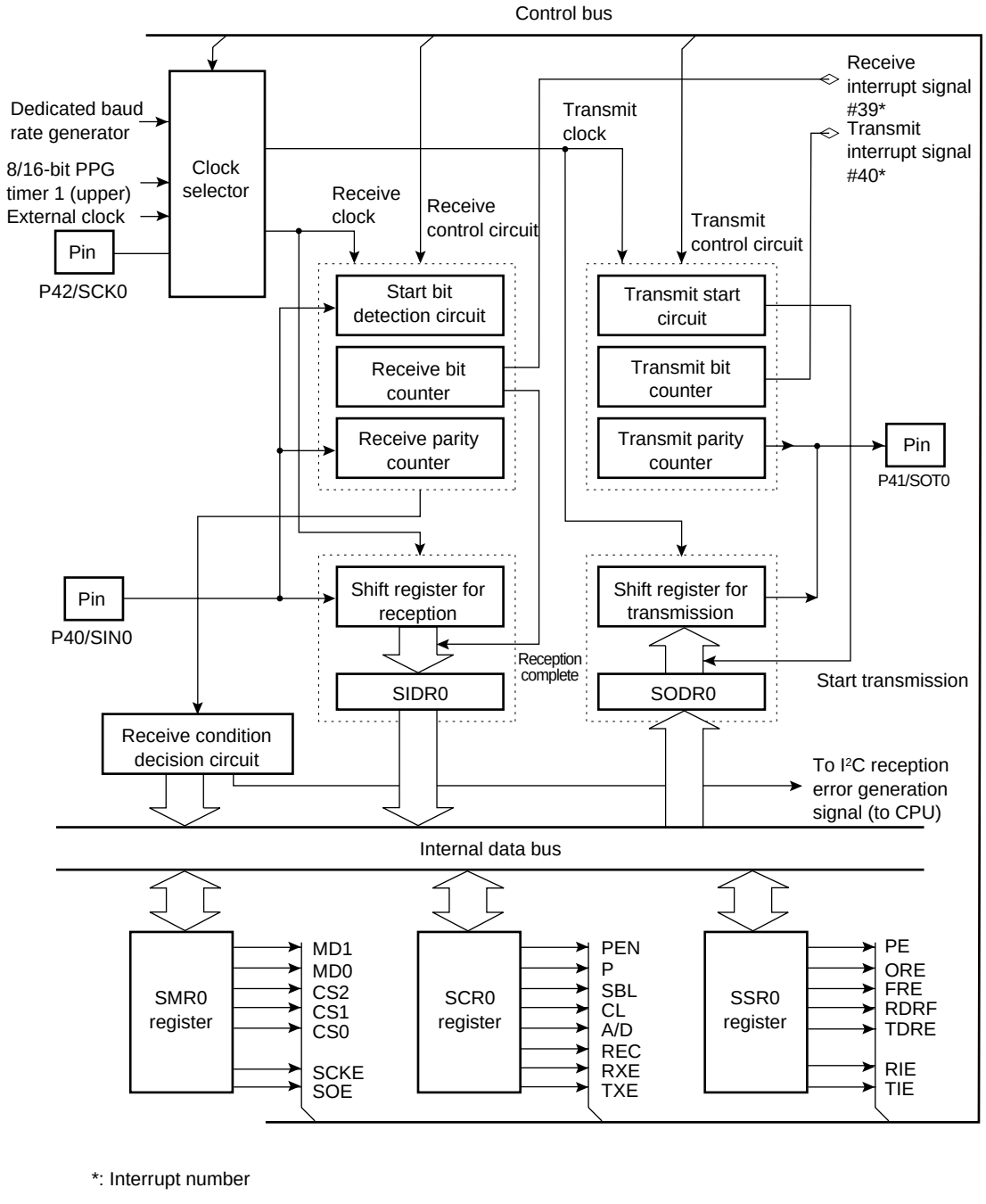

*: Interrupt number

- **UART1 (SCI)**

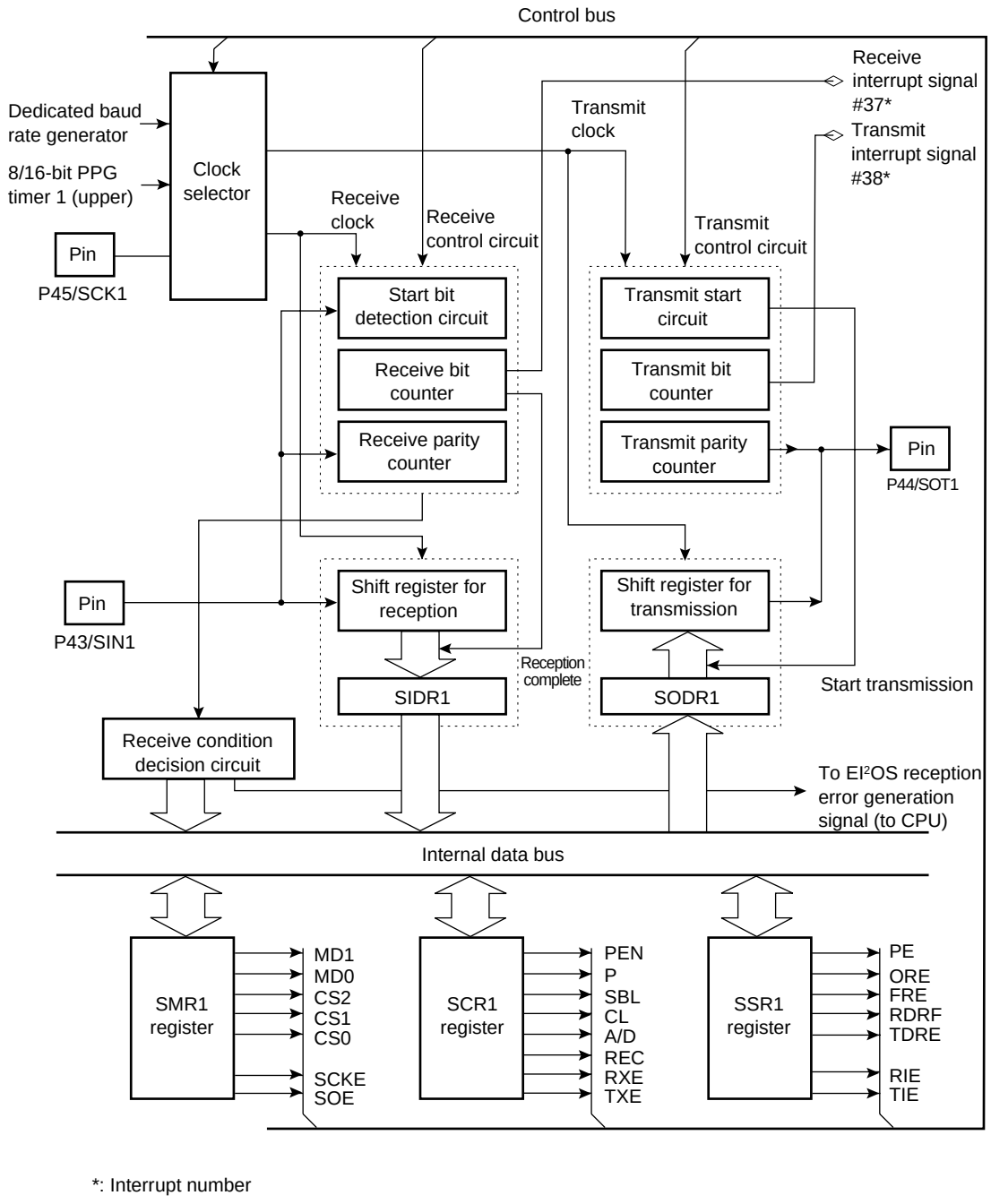

*: Interrupt number

10. DTP/External Interrupt Circuit

DTP (Data Transfer Peripheral), which is located between the peripheral circuit outside the device and the F²MC-16LX CPU, receives an interrupt request or DMA request generated by the external peripheral circuit* for transmission to the F²MC-16LX CPU. DTP is used to activate the intelligent I/O service or interrupt processing. As request levels for IRQ2 to IRQ7, two types of “H” and “L” can be selected for the intelligent I/O service. Rising and falling edges as well as “H” and “L” can be selected for an external interrupt request. For IRQ0 and IRQ1, a request by a level cannot be entered, but both edges can be entered.

* : The external peripheral circuit is connected outside the MB90570A/570C series device.

Note : IRQ0 and IRQ1 cannot be used for the intelligent I/O service and return from an interrupt.

(1) Register Configuration

- DTP/interrupt factor register (EIRR)

Address	bit 15	bit 14	bit 13	bit 12	bit 11	bit 10	bit 9	bit 8	bit 7 · · · · · · · · · · · · bit 0	Initial value
000031H	ER7	ER6	ER5	ER4	ER3	ER2	ER1	ER0	(ENIR)	XXXXXXXXB
	R/W	R/W	R/W	R/W	R/W	R/W	R/W	R/W		

- DTP/interrupt enable register (ENIR)

Address	bit 15 · · · · · · · · · · · · bit 8	bit 7	bit 6	bit 5	bit 4	bit 3	bit 2	bit 1	bit 0	Initial value
000030H	(EIRR)	EN7	EN6	EN5	EN4	EN3	EN2	EN1	EN0	00000000B
		R/W	R/W	R/W	R/W	R/W	R/W	R/W	R/W	

- Request level setting register (ELVR)

Address	bit 15 · · · · · · · · · · · · bit 8	bit 7	bit 6	bit 5	bit 4	bit 3	bit 2	bit 1	bit 0	Initial value
Low order address 000032H	(ELVR upper)	LB3	LA3	LB2	LA2	LB1	LA1	LB0	LA0	00000000B
		R/W	R/W	R/W	R/W	R/W	R/W	R/W	R/W	

Address	bit 15	bit 14	bit 13	bit 12	bit 11	bit 10	bit 9	bit 8	bit 7 · · · · · · · · · · · · bit 0	Initial value
High order address 000033H	LB7	LA7	LB6	LA6	LB5	LA5	LB4	LA4	(ELVR lower)	00000000B
	R/W	R/W	R/W	R/W	R/W	R/W	R/W	R/W		

R/W:Readable and writable

X:Undefined

(2) Block Diagram

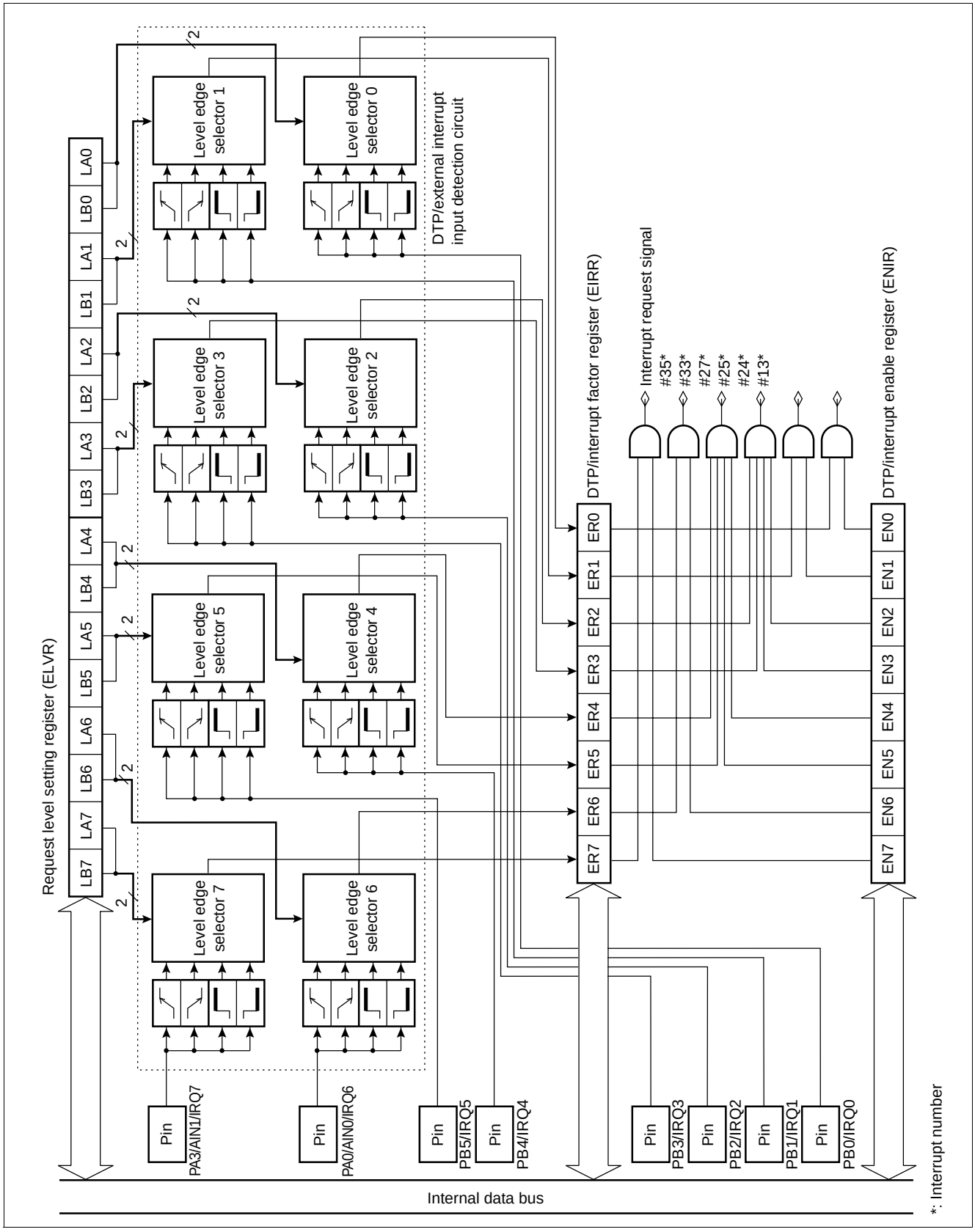

11. Delayed Interrupt Generation Module

The delayed interrupt generation module generates interrupts for switching tasks for development on a real-time operating system (REALOS series). The module can be used to generate softwarewise generates hardware interrupt requests to the CPU and cancel the interrupts.

This module does not conform to the extended intelligent I/O service (EI^{2}OS).

(1) Register Configuration

- Delayed interrupt factor generation/cancellation register (DIRR)

Address	bit 15	bit 14	bit 13	bit 12	bit 11	bit 10	bit 9	bit 8	bit 7 ····· bit 0	Initial value
00009F$_H$	—	—	—	—	—	—	—	R0	(PACSR)	- - - - - - - 0$_B$
	—	—	—	—	—	—	—	R/W		

Note: Upon a reset, an interrupt is canceled.

R/W:Readable and writable

—:Reserved

The DIRR is the register used to control delay interrupt request generation/cancellation. Programming this register with “1” generates a delay interrupt request. Programming this register with “0” cancels a delay interrupt request. Upon a reset, an interrupt is canceled. The reserved bit area can be programmed with either “0” or “1”. For future extension, however, it is recommended that bit set and clear instructions be used to access this register.

(2) Block Diagram

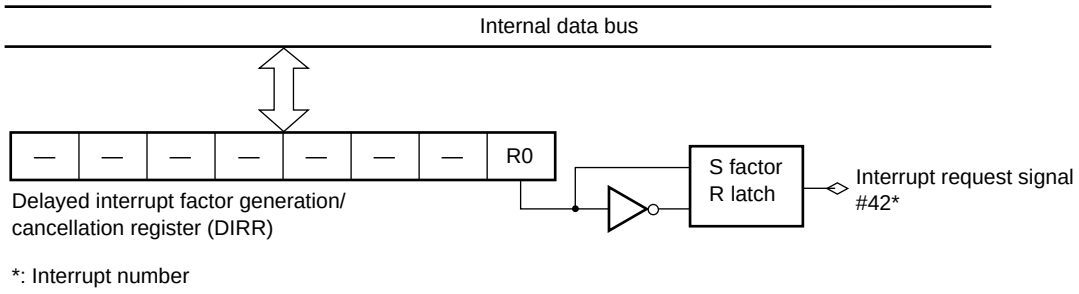

*: Interrupt number

12. 8/10-bit A/D Converter

The 8/10-bit A/D converter has a function of converting analog voltage input to the analog input pins (input voltage) to digital values (A/D conversion) and has the following features.

- Minimum conversion time: 26.3 µs (at machine clock of 16 MHz, including sampling time)
- Minimum sampling time: 4 µs/256 µs (at machine clock of 16 MHz)
- Compare time: 176/352 machine cycles per channel (176 machine cycles are used for a machine clock below 8 MHz.)
- Conversion method: RC successive approximation method with a sample and hold circuit.
- 8-bit or 10-bit resolution
- Analog input pins: Selectable from eight channels by software
  Single conversion mode: Selects and converts one channel.
  Scan conversion mode:Converts two or more successive channels. Up to eight channels can be programmed.
  Continuous conversion mode: Repeatedly converts specified channels.
  Stop conversion mode:Stops conversion after completing a conversion for one channel and wait for the next activation (conversion can be started synchronously.)
- Interrupt requests can be generated and the extended intelligent I/O service (EI^2OS) can be started after the end of A/D conversion. Furthermore, A/D conversion result data can be transferred to the memory, enabling efficient continuous processing.
- When interrupts are enabled, there is no loss of data even in continuous operations because the conversion data protection function is in effect.
- Starting factors for conversion: Selected from software activation, and external trigger (falling edge).

(1) Register Configuration

- A/D control status register upper digits (ADCS2)

Address	bit 15	bit 14	bit 13	bit 12	bit 11	bit 10	bit 9	bit 8	bit 7 ····· bit 0	Initial value
000037H	BUSY	INT	INTE	PAUS	STS1	STS0	STRT	RESV	(ADCS1)	00000000B
	R/W	R/W	R/W	R/W	R/W	R/W	W	R/W		

- A/D control status register lower digits (ADCS1)

Address	bit 15 ····· bit 8	bit 7	bit 6	bit 5	bit 4	bit 3	bit 2	bit 1	bit 0	Initial value
000036H	(ADCS2)	MD1	MD0	ANS2	ANS1	ANS0	ANE2	ANE1	ANE0	00000000B
		R/W	R/W	R/W	R/W	R/W	R/W	R/W	R/W	

- A/D data register upper digits (ADCR2)

Address	bit 15	bit 14	bit 13	bit 12	bit 11	bit 10	bit 9	bit 8	bit 7 ····· bit 0	Initial value
000039H	DSEL	ST1	ST0	CT1	XCT0	—	D9	D8	(ADCR1)	00001-XXB
	W	W	W	W	W	—	—	—		

- A/D data register lower digits (ADCR1)

Address	bit 15 ····· bit 8	bit 7	bit 6	bit 5	bit 4	bit 3	bit 2	bit 1	bit 0	Initial value
000038H	(ADCR2)	D7	D6	D5	D4	D3	D2	D1	D0	XXXXXXXXB
		R	R	R	R	R	R	R	R	

R/W :Readable and writable
R :Read only
W :Write only
— :Reserved
X :Undefined
RESV: Reserved bit

(2) Block Diagram

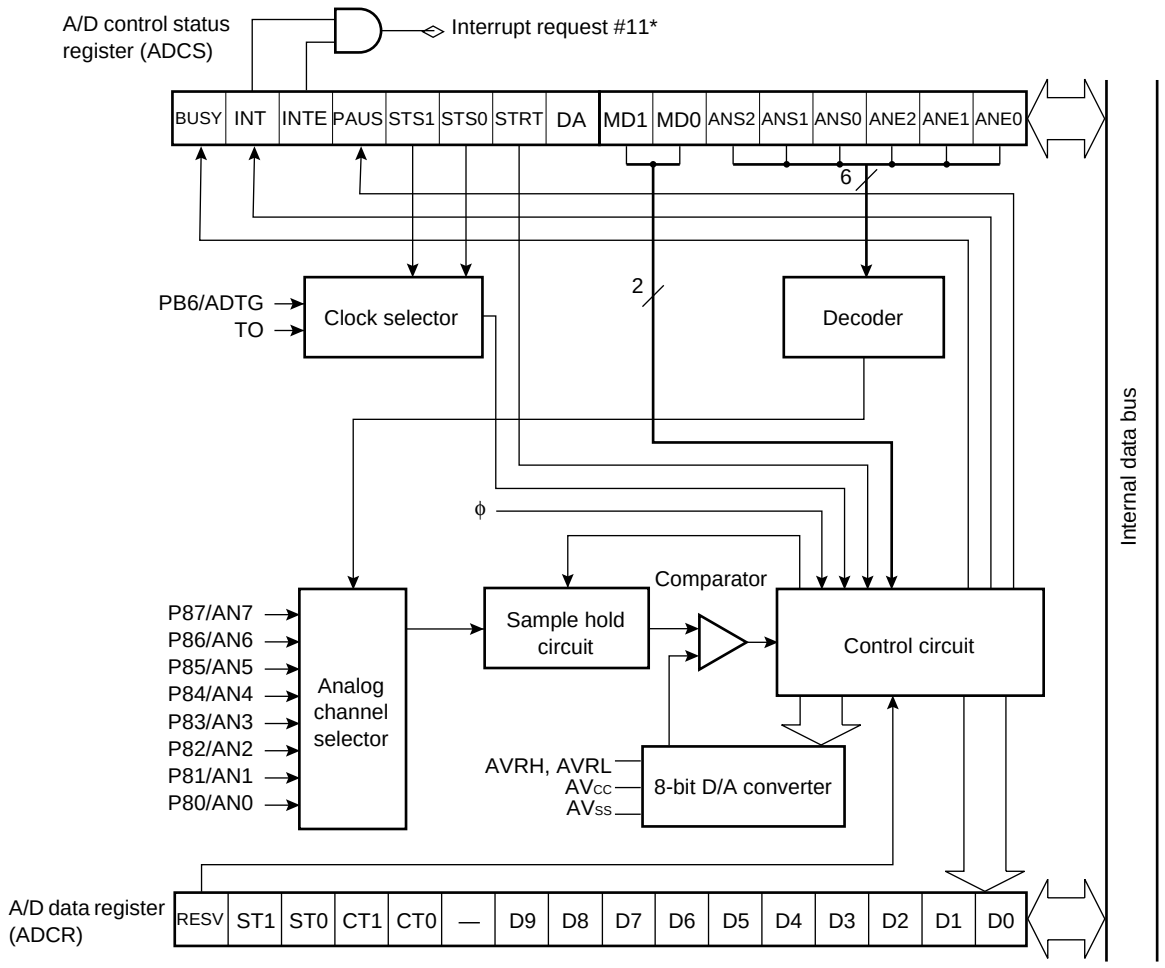

ϕ:Machine clock frequency

TO:8/16-bit PPG timer channel 1 output

*:Interrupt number

13. 8-bit D/A Converter

The 8-bit D/A converter, which is based on the R-2R system, supports 8-bit resolution mode. It contains two channels each of which can be controlled in terms of output by the D/A control register.

(1) Register Configuration

- D/A converter data register ch.0 (DADR0)

Address	bit 15 ····· bit 8	bit 7	bit 6	bit 5	bit 4	bit 3	bit 2	bit 1	bit 0	Initial value
00003A$_H$	(DADR1)	DA07	DA06	DA05	DA04	DA03	DA02	DA01	DA00	XXXXXXXX$_B$
		R/W	R/W	R/W	R/W	R/W	R/W	R/W	R/W	

- D/A converter data register ch.1 (DADR1)

Address	bit 15	bit 14	bit 13	bit 12	bit 11	bit 10	bit 9	bit 8	bit 7 ····· bit 0	Initial value
00003B$_H$	DA17	DA16	DA15	DA14	DA13	DA12	DA11	DA10	(DADR0)	XXXXXXXX$_B$
	R/W	R/W	R/W	R/W	R/W	R/W	R/W	R/W		

- D/A control register 0 (DACR0)

Address	bit 15 ····· bit 8	bit 7	bit 6	bit 5	bit 4	bit 3	bit 2	bit 1	bit 0	Initial value
00003C$_H$	(DACR1)	—	—	—	—	—	—	—	DAE0	- - - - - - - 0$_B$
		—	—	—	—	—	—	—	R/W	

- D/A control register 1 (DACR1)

Address	bit 15	bit 14	bit 13	bit 12	bit 11	bit 10	bit 9	bit 8	bit 7 ····· bit 0	Initial value
00003D$_H$	—	—	—	—	—	—	—	DAE1	(DACR0)	- - - - - - - 0$_B$
	—	—	—	—	—	—	—	R/W		

R/W:Readable and writable
—:Reserved
X:Undefined

(2) Block Diagram

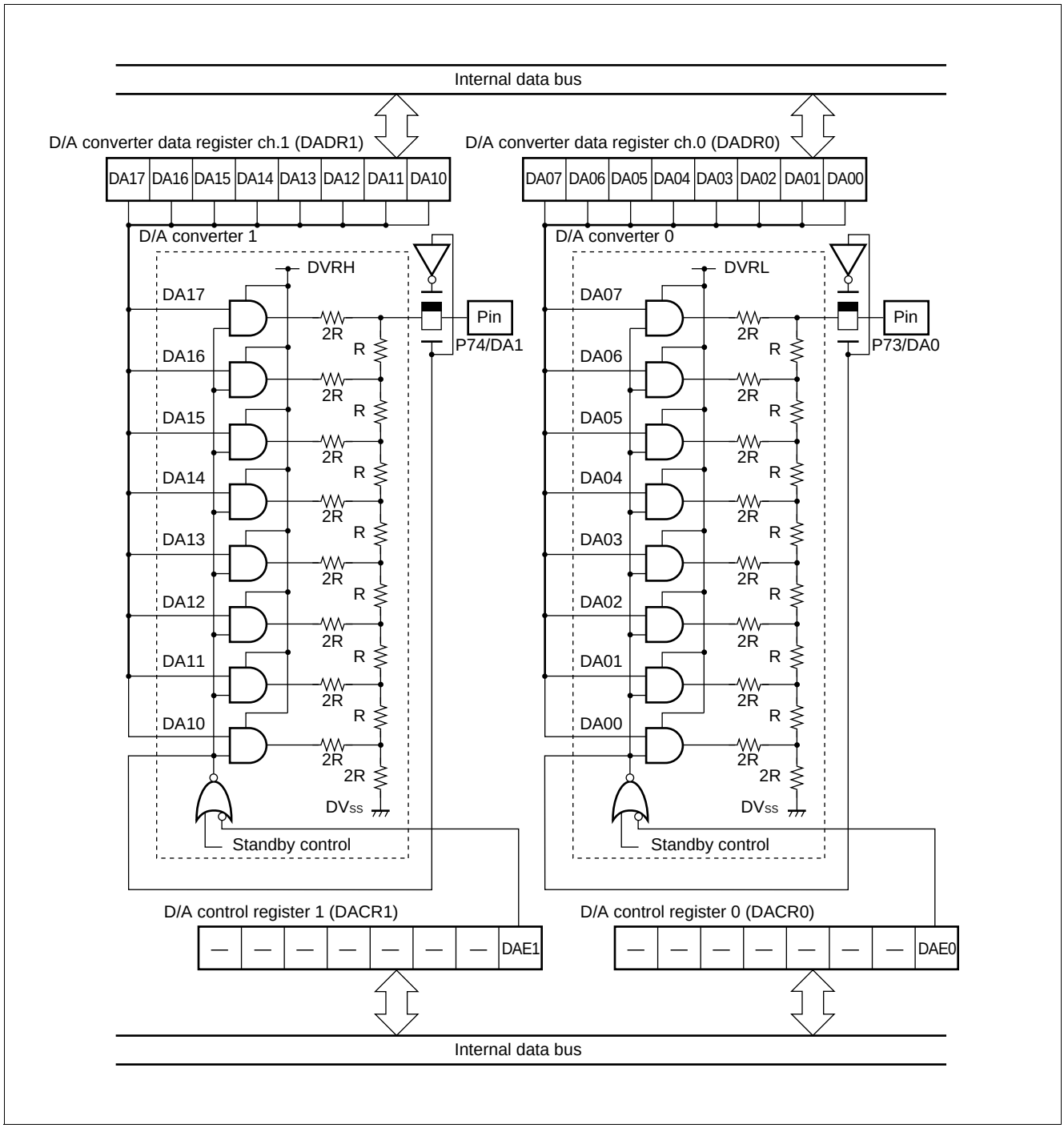

14. Watch Timer

The watch timer control register (WTC) controls operation of the watch timer, and time for an interval interrupt.

(1) Register Configuration

- watch timer control register (WTC)

Address	bit 15 ····· bit 8	bit 7	bit 6	bit 5	bit 4	bit 3	bit 2	bit 1	bit 0	Initial value
0000AA$_H$	(Disabled)	WDCS	SCE	WTIE	WTOF	WTR	WTC2	WTC1	WTC0	1X000000$_B$
		R/W	R	R/W	R/W	R/W	R	R/W	R/W	

R/W:Readable and writable
R:Read only
X:Undefined

(2) Block Diagram

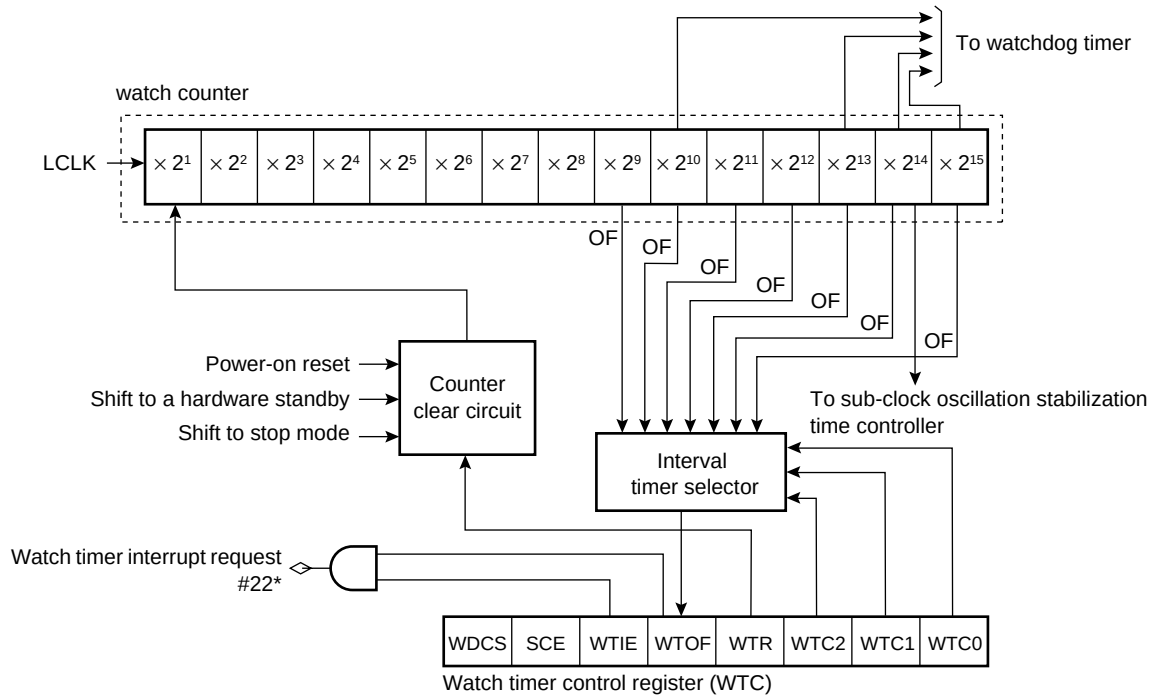

*:Interrupt number
OF:Overflow
LCLK:Oscillation sub-clock frequency

15. Chip Select Output

This module generates a chip select signal for facilitating a memory and I/O unit, and is provided with eight chip select output pins. When access to an address is detected with a hardware-set area set for each pin register, a select signal is output from the pin.

(1) Register Configuration

- Chip selection control register 1, 3, 5, 7 (CSCR1, CSCR3, CSCR5, CSCR7)

Address	bit 15	bit 14	bit 13	bit 12	bit 11	bit 10	bit 9	bit 8	bit 7 ····· bit 0	Initial value
CSCR1: 000081H CSCR3: 000083H CSCR5: 000085H CSCR7: 000087H	—	—	—	—	ACTL	OPEL	CSA1	CSA0	(CSCR0, CSCR2, CSCR4, CSCR6)	- - - - 0000B
	—	—	—	—	R/W	R/W	R/W	R/W		

- Chip selection control register 0, 2, 4, 6 (CSCR0, CSCR2, CSCR4, CSCR6)

Address	bit 15 ····· bit 8	bit 7	bit 6	bit 5	bit 4	bit 3	bit 2	bit 1	bit 0	Initial value
CSCR0: 000080H CSCR2: 000082H CSCR4: 000084H CSCR6: 000086H	(CSCR1, CSCR3, CSCR5, CSCR7)	—	—	—	—	ACTL	OPEL	CSA1	CSA0	- - - - 0000B
		—	—	—	—	R/W	R/W	R/W	R/W	

R/W:Readable and writable
—:Reserved

(2) Block Diagram

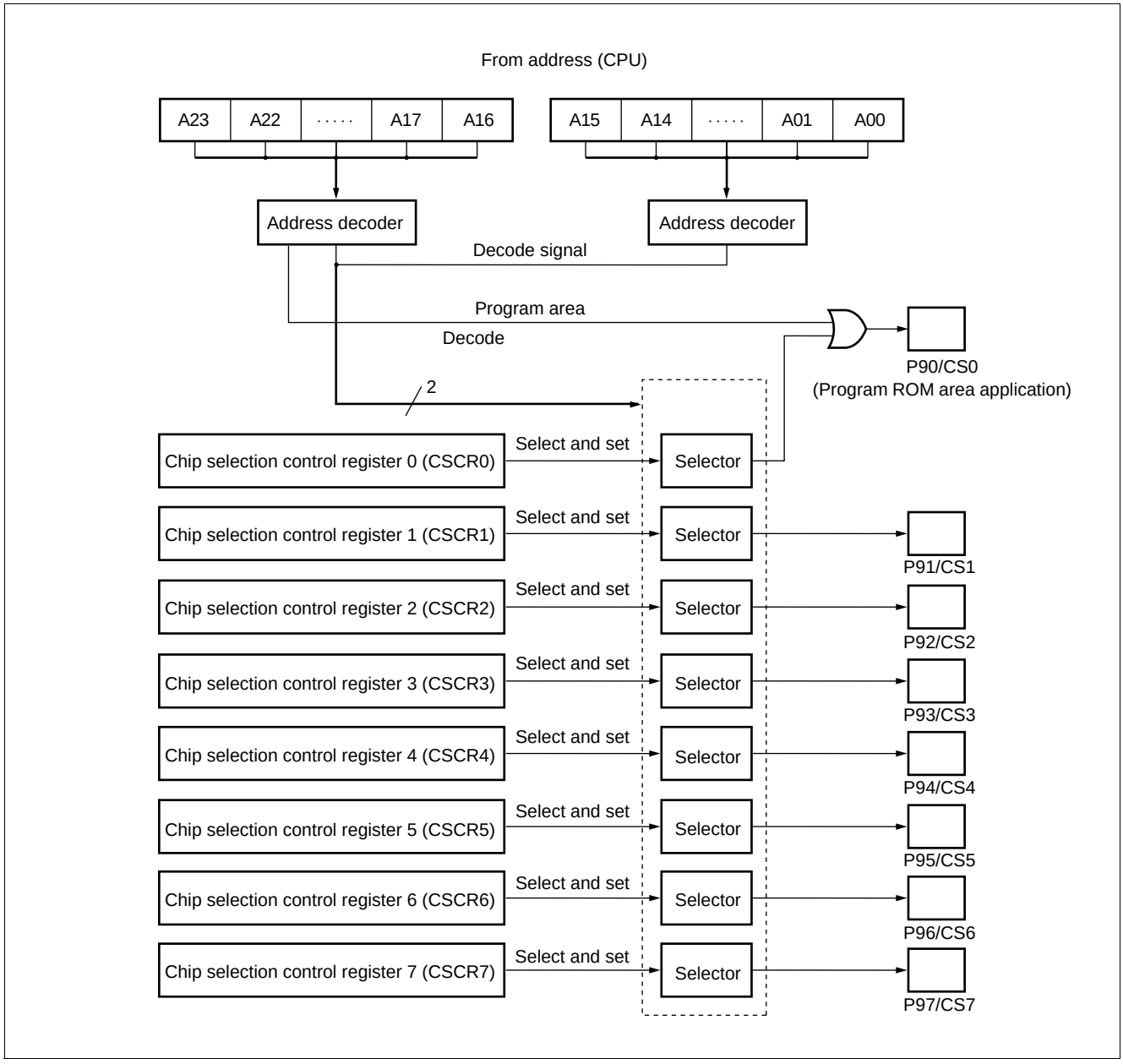

(3) Decode Address Spaces

Pin name	CSA		Decode space	Number of area bytes	Remarks
	1	0			
CS0	0	0	F00000H to FFFFFFH	1 Mbyte	Becomes active when the program ROM area or the program vector is fetched.
	0	1	F80000H to FFFFFFH	512 kbyte	
	1	0	FE0000H to FFFFFFH	128 kbyte	
	1	1	—	Disabled	
CS1	0	0	E00000H to EFFFFFH	1 Mbyte	Adapted to the data ROM and RAM areas, and external circuit connection applications.
	0	1	F00000H to F7FFFFH	512 kbyte	
	1	0	FC0000H to FDFFFFH	128 kbyte	
	1	1	68FF80H to 68FFFFH	128 byte	
CS2	0	0	003000H to 003FFFH	4 kbyte	Adapted to the data ROM and RAM areas, and external circuit connection applications.
	0	1	FA0000H to FBFFFFH	128 kbyte	
	1	0	68FF80H to 68FFFFH	128 byte	
	1	1	68FF00H to 68FF7FH	128 byte	
CS3	0	0	F80000H to F9FFFFH	128 kbyte	Adapted to the data ROM and RAM areas, and external circuit connection applications.
	0	1	68FF00H to 68FF7FH	128 byte	
	1	0	68FE80H to 68FEFFH	128 byte	
	1	1	—	Disabled	
CS4	0	0	002800H to 002FFFH	2 kbyte	Adapted to the data ROM and RAM areas, and external circuit connection applications.
	0	1	68FE80H to 68FEFFH	128 byte	
	1	0	—	Disabled	
	1	1	—	Disabled	
CS5	0	0	68FF80H to 68FFFFH	128 byte	Adapted to the data ROM and RAM areas, and external circuit connection applications.
	0	1	—	Disabled	
	1	0	—	Disabled	
	1	1	—	Disabled	
CS6	0	0	68FF00H to 68FF7FH	128 byte	Adapted to the data ROM and RAM areas, and external circuit connection applications.
	0	1	—	Disabled	
	1	0	—	Disabled	
	1	1	—	Disabled	
CS7	—	—	—	Disabled	Disabled

16. Communications Prescaler Register

This register controls machine clock division.

Output from the communications prescaler register is used for UART0 (SCI), UART1 (SCI), and extended I/O serial interface.

The communications prescaler register is so designed that a constant baud rate may be acquired for various machine clocks.

(1) Register Configuration

- Communications prescaler control register 0,1 (CDCR0, CDCR1)

Address	bit 15 ····· bit 8	bit 7	bit 6	bit 5	bit 4	bit 3	bit 2	bit 1	bit 0	Initial value
000028H 00002AH	(Disabled)	MD	—	—	—	DIV3	DIV2	DIV1	DIV0	0 - - - 1111B
		R/W	—	—	—	R/W	R/W	R/W	R/W	

R/W:Readable and writable
—:Reserved

17. Address Match Detection Function

When the address is equal to a value set in the address detection register, the instruction code loaded into the CPU is replaced forcibly with the INT9 instruction code (01H). As a result, when the CPU executes a set instruction, the INT9 instruction is executed. Processing by the INT#9 interrupt routine allows the program patching function to be implemented.

Two address detection registers are supported. An interrupt enable bit is prepared for each register. If the value set in the address detection register matches an address and if the interrupt enable bit is set at “1”, the instruction code loaded into the CPU is replaced forcibly with the INT9 instruction code.

(1) Register Configuration

- Program address detection register 0 to 2 (PADR0)

Address	bit 7	bit 6	bit 5	bit 4	bit 3	bit 2	bit 1	bit 0	Initial value
PADR0 (Low order address): 001FF0H									XXXXXXXXB
	R/W	R/W	R/W	R/W	R/W	R/W	R/W	R/W	

Address	bit 7	bit 6	bit 5	bit 4	bit 3	bit 2	bit 1	bit 0	Initial value
PADR0 (Middle order address): 001FF1H									XXXXXXXXB
	R/W	R/W	R/W	R/W	R/W	R/W	R/W	R/W	

Address	bit 7	bit 6	bit 5	bit 4	bit 3	bit 2	bit 1	bit 0	Initial value
PADR0 (High order address): 001FF2H									XXXXXXXXB
	R/W	R/W	R/W	R/W	R/W	R/W	R/W	R/W	

- Program address detection register 3 to 5 (PADR1)

Address	bit 7	bit 6	bit 5	bit 4	bit 3	bit 2	bit 1	bit 0	Initial value
PADR1 (Low order address): 001FF3H									XXXXXXXXB
	R/W	R/W	R/W	R/W	R/W	R/W	R/W	R/W	

Address	bit 7	bit 6	bit 5	bit 4	bit 3	bit 2	bit 1	bit 0	Initial value
PADR1 (Middle order address): 001FF4H									XXXXXXXXB
	R/W	R/W	R/W	R/W	R/W	R/W	R/W	R/W	

Address	bit 7	bit 6	bit 5	bit 4	bit 3	bit 2	bit 1	bit 0	Initial value
PADR1 (High order address): 001FF5H									XXXXXXXXB
	R/W	R/W	R/W	R/W	R/W	R/W	R/W	R/W	

- Program address detection control status register (PACSR)

Address	bit 7	bit 6	bit 5	bit 4	bit 3	bit 2	bit 1	bit 0	Initial value
00009EH	RESV	RESV	RESV	RESV	AD1E	RESV	AD0E	RESV	00000000B
	R/W	R/W	R/W	R/W	R/W	R/W	R/W	R/W	

R/W :Readable and writable
X :Undefined
RESV:Reserved bit

(2) Block Diagram

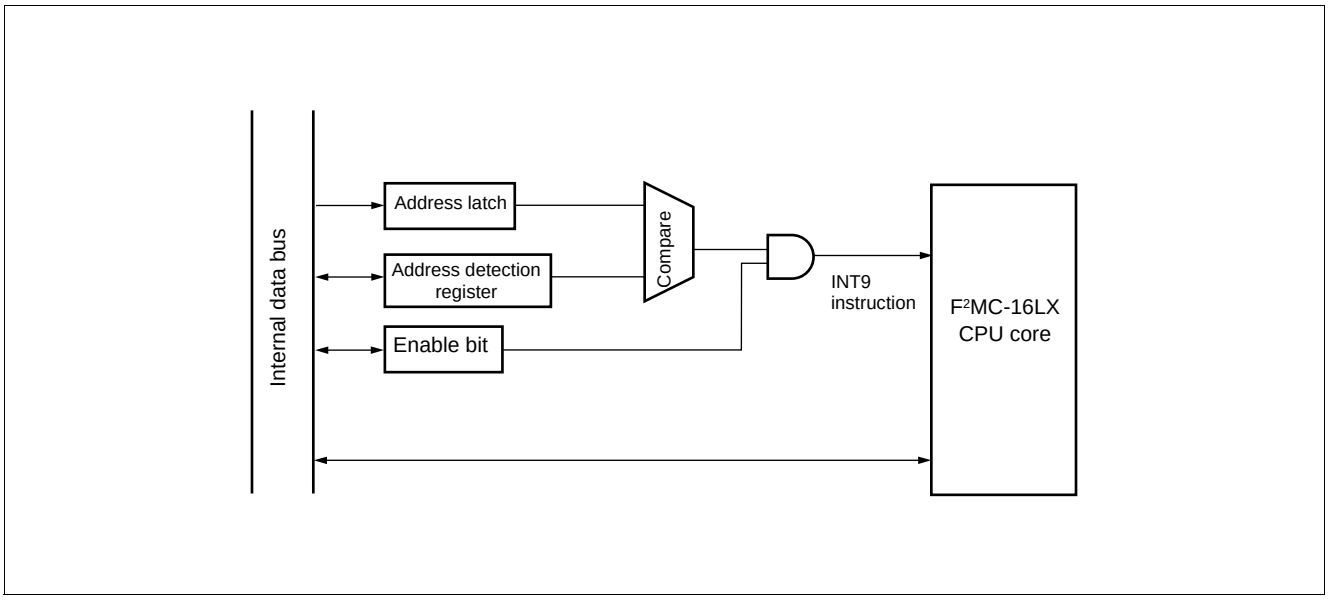

18. ROM Mirroring Function Selection Module

The ROM mirroring function selection module can select what the FF bank allocated the ROM sees through the 00 bank according to register settings.

(1) Register Configuration

- ROM mirroring function selection register (ROMM)

Address	bit 15	bit 14	bit 13	bit 12	bit 11	bit 10	bit 9	bit 8	bit 7 ····· bit 0	Initial value
00006F$_H$	—	—	—	—	—	—	—	MI	(Disabled)	- - - - - - - 1$_B$
	—	—	—	—	—	—	—	W		

W:Write only
—:Reserved

Note : Do not access this register during operation at addresses 004000$_H$ to 00FFFF$_H$.

(2) Block Diagram

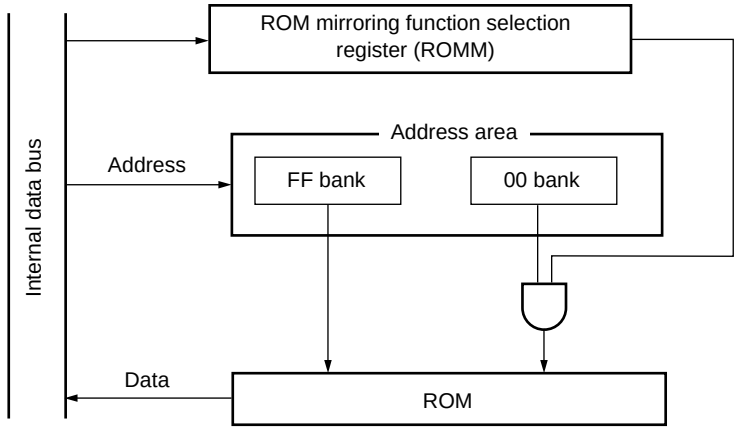

19. Low-power Consumption (Standby) Mode

The F²MC-16LX has the following CPU operating mode configured by selection of an operating clock and clock operation control.

- **Clock mode**
  PLL clock mode: A mode in which the CPU and peripheral equipment are driven by PLL-multiplied oscillation clock (HCLK).
  Main clock mode: A mode in which the CPU and peripheral equipment are driven by divided-by-2 of the oscil lation clock (HCLK).
  The PLL multiplication circuits stops in the main clock mode.
- **CPU intermittent operation mode**
  The CPU intermittent operation mode is a mode for reducing power consumption by operating the CPU intermittently while external bus and peripheral functions are operated at a high-speed.
- **Hardware standby mode**
  The hardware standby mode is a mode for reducing power consumption by stopping clock supply to the CPU by the low-power consumption control circuit, stopping clock supplies to the CPU and peripheral functions (timebase timer mode), and stopping oscillation clock (stop mode, hardware standby mode). Of these modes, modes other than the PLL clock mode are power consumption modes.

(1) Register Configuration

- Clock select register (CKSCR)

Address	bit 15	bit 14	bit 13	bit 12	bit 11	bit 10	bit 9	bit 8	bit 7 ····· bit 0	Initial value
0000A1H	SCM	MCM	WS1	WS0	SCS	MCS	CS1	CS0	(LPMCR)	11111100B
	R	R	R/W	R/W	R/W	R/W	R/W	R/W		

- Low-power consumption mode control register (LPMCR)

Address	bit 15 ····· bit 8	bit 7	bit 6	bit 5	bit 4	bit 3	bit 2	bit 1	bit 0	Initial value
0000A0H	(CKSCR)	STP	SLP	SPL	RST	TMD	CG1	CG0	SSR	00011000B
		W	W	R/W	W	R/W	W	R/W	R/W	

R/W:Readable and writable
R:Read only
W:Write only

(2) Block Diagram

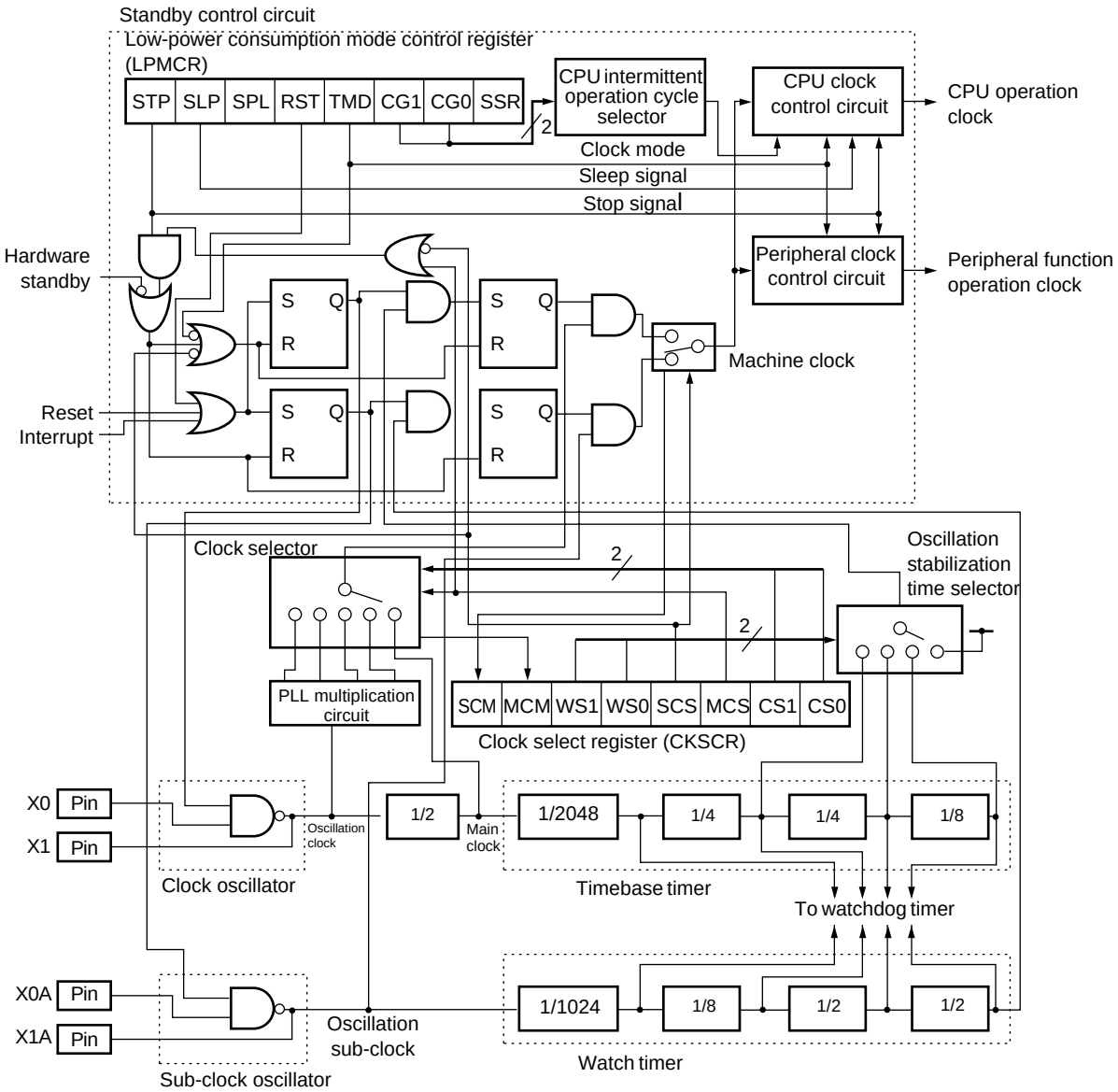

■ ELECTRICAL CHARACTERISTICS

1. Absolute Maximum Ratings

(AV_{SS} = V_{SS} = 0.0 V)

Parameter	Symbol	Value		Unit	Remarks
		Min	Max		
Power supply voltage	V_{CC}	V_{SS} – 0.3	V_{SS} + 6.0	V	
	AV_{CC}	V_{SS} – 0.3	V_{SS} + 6.0	V	*1
	AVRH, AVRL	V_{SS} – 0.3	V_{SS} + 6.0	V	*1
	DVRH	V_{SS} – 0.3	V_{SS} + 6.0	V	*1
Input voltage	V_I	V_{SS} – 0.3	V_{SS} + 6.0	V	*2
Output voltage	V_O	V_{SS} – 0.3	V_{SS} + 6.0	V	*2
“L” level maximum output current	I_{OL}	—	15	mA	*3
“L” level average output current	I_{OLAV}	—	4	mA	*4
“L” level total maximum output current	ΣI_{OL}	—	100	mA	
“L” level total average output current	ΣI_{OLAV}	—	50	mA	*5
“H” level maximum output current	I_{OH}	—	–15	mA	*3
“H” level average output current	I_{OHAV}	—	–4	mA	*4
“H” level total maximum output current	ΣI_{OH}	—	–100	mA	
“H” level total average output current	ΣI_{OHAV}	—	–50	mA	*5
Power consumption	P_D	—	300	mW	MB90573, MB90V570A
		—	500	mW	MB90574C
		—	800	mW	MB90F574A
Operating temperature	T_A	–40	+85	°C	
Storage temperature	Tstg	–55	+150	°C	

*1 : Care must be taken that AV_{CC}, AVRH, AVRL, and DVRH do not exceed V_{CC}. Also, care must be taken that AVRH and AVRL do not exceed AV_{CC}, and AVRL does not exceed AVRH.

*2 : V_I and V_O shall never exceed V_{CC} + 0.3 V.

*3 : The maximum output current is a peak value for a corresponding pin.

*4 : Average output current is an average current value observed for a 100 ms period for a corresponding pin.

*5 : Total average current is an average current value observed for a 100 ms period for all corresponding pins.

Note : Average output current = operating × operating efficiency

WARNING: Semiconductor devices can be permanently damaged by application of stress (voltage, current, temperature, etc.) in excess of absolute maximum ratings. Do not exceed these ratings.

2. Recommended Operating Conditions

(AV_{SS} = V_{SS} = 0.0 V)

Parameter	Symbol	Value		Unit	Remarks
		Min	Max		
Power supply voltage	V_{CC}	3.0	5.5	V	Normal operation (MB90574C)
	V_{CC}	4.5	5.5	V	Normal operation (MB90F574A)
	V_{CC}	3.0	5.5	V	Retains status at the time of operation stop
Smoothing capacitor	C_S	0.1	1.0	µF	*
Operating temperature	T_A	–40	+85	°C	

* : Use a ceramic capacitor or a capacitor with equivalent frequency characteristics. The smoothing capacitor to be connected to the V_{CC} pin must have a capacitance value higher than C_S.

WARNING: The recommended operating conditions are required in order to ensure the normal operation of the semiconductor device. All of the device's electrical characteristics are warranted when the device is operated within these ranges.

Always use semiconductor devices within their recommended operating condition ranges. Operation outside these ranges may adversely affect reliability and could result in device failure.

No warranty is made with respect to uses, operating conditions, or combinations not represented on the data sheet. Users considering application outside the listed conditions are advised to contact their representatives beforehand.

- **C pin connection circuit**

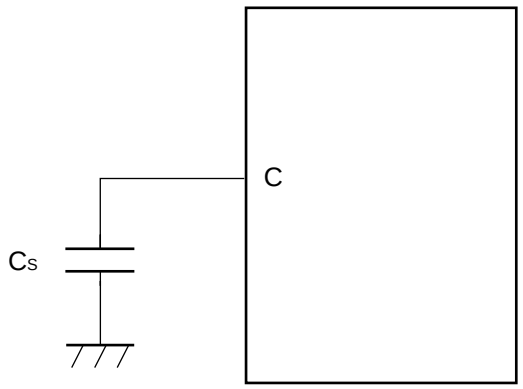

3. DC Characteristics

(AV_{CC} = V_{CC} = 5.0 V ± 10%, AV_{SS} = V_{SS} = 0.0 V, T_A = –40°C to +85°C)

Parameter	Symbol	Pin name	Condition	Value			Unit	Remarks
				Min	Typ	Max		
"H" level input voltage	V_{IHS}	CMOS hysteresis input pin	V_{CC} = 3.0 V to 5.5 V (MB90573/574C) V_{CC} = 4.5 V to 5.5 V (MB90F574A)	0.8 V_{CC}	—	V_{CC} + 0.3	V	
	V_{IHM}	MD pin input		V_{CC} – 0.3	—	V_{CC} + 0.3	V	
"L" level input voltage	V_{ILS}	CMOS hysteresis input pin		V_{SS} – 0.3	—	0.2 V_{CC}	V	
	V_{ILM}	MD pin input		V_{SS} – 0.3	—	V_{SS} + 0.3	V	
"H" level output voltage	V_{OH}	Other than PA6 and PA7	V_{CC} = 4.5 V I_{OH} = –2.0 mA	V_{CC} – 0.5	—	—	V	
"L" level output voltage	V_{OL}	All output pins	V_{CC} = 4.5 V I_{OL} = 2.0 mA	—	—	0.4	V	
Open-drain output leakage current	I_{leak}	PA6, PA7	—	—	0.1	5	µA	
Input leakage current	I_{IL}	Other than PA6 and PA7	V_{CC} = 5.5 V V_{SS} < V_I < V_{CC}	–5	—	5	µA	
Pull-up resistance	R_{UP}	P00 to P07, P10 to P17, P60 to P67, $\overline{RST}$, MD0, MD1	—	15	30	100	kΩ	
Pull-down resistance	R_{DOWN}	MD0 to MD2	—	15	30	100	kΩ	
Power supply current	I_{CC}	V_{CC}	Internal operation at 16 MHz V_{CC} at 5.0 V Normal operation	—	30	40	mA	MB90573
	I_{CC}	V_{CC}		—	85	130	mA	MB90F574A
	I_{CC}	V_{CC}		—	50	80	mA	MB90574C
	I_{CC}	V_{CC}	Internal operation at 16 MHz V_{CC} at 5.0 V A/D converter operation	—	35	45	mA	MB90573
	I_{CC}	V_{CC}		—	90	140	mA	MB90F574A
	I_{CC}	V_{CC}		—	55	85	mA	MB90574C
	I_{CC}	V_{CC}	Internal operation at 16 MHz V_{CC} at 5.0 V D/A converter operation	—	40	50	mA	MB90573
	I_{CC}	V_{CC}		—	95	145	mA	MB90F574A
	I_{CC}	V_{CC}		—	65	85	mA	MB90574C

(Continued)

(Continued)

(AV_{CC} = V_{CC} = 5.0 V ± 10%, AV_{SS} = V_{SS} = 0.0 V, T_A = –40°C to +85°C)

Parameter	Symbol	Pin name	Condition	Value			Unit	Remarks
				Min	Typ	Max		
Power supply current	I_{CC}	V_{CC}	When data written in flash mode programming of erasing	—	95	140	mA	MB90F574A
	I_{CCS}	V_{CC}	Internal operation at 16 MHz V_{CC} = 5.0 V In sleep mode	—	7	12	mA	MB90573
	I_{CCS}	V_{CC}		—	25	30	mA	MB90F574A
	I_{CCS}	V_{CC}		—	15	20	mA	MB90574C
	I_{CCL}	V_{CC}	Internal operation at 8 kHz V_{CC} = 5.0 V T_A = +25°C Subsystem operation	—	0.1	1.0	mA	MB90573
	I_{CCL}	V_{CC}		—	4	7	mA	MB90F574A
	I_{CCL}	V_{CC}		—	0.03	1	mA	MB90574C
	I_{CCLS}	V_{CC}	Internal operation at 8 kHz V_{CC} = 5.0 V T_A = +25°C In subsleep mode	—	30	50	µA	MB90573
	I_{CCLS}	V_{CC}		—	0.1	1	mA	MB90F574A
	I_{CCLS}	V_{CC}		—	10	50	µA	MB90574C
	I_{CCT}	V_{CC}	Internal operation at 8 kHz V_{CC} = 5.0 V T_A = +25°C In clock mode	—	15	30	µA	MB90573
	I_{CCT}	V_{CC}		—	30	50	µA	MB90F574A
	I_{CCT}	V_{CC}		—	1.0	30	µA	MB90574C
	I_{CCH}	V_{CC}	T_A = +25°C In stop mode	—	5	20	µA	MB90573
	I_{CCH}	V_{CC}		—	0.1	10	µA	MB90F574A MB90574C
Input capacitance	C_{IN}	Other than AV_{CC}, AV_{SS}, V_{CC}, V_{SS}	—	—	10	80	pF	

4. AC Characteristics

(1) Reset, Hardware Standby Input Timing

(AV_{CC} = V_{CC} = 5.0 V ±10%, AV_{SS} = V_{SS} = 0.0 V, T_A = –40°C to +85°C)

Parameter	Symbol	Pin name	Condition	Value		Unit	Remarks
				Min	Max		
Reset input time	t_{RSTL}	$\overline{RST}$	—	4 t_{CP}	—	ns	Under normal operation
				Oscillation time of oscillator * + 4 t_{CP}	—	ms	In stop mode
Hardware standby input time	t_{HSTL}	$\overline{HST}$		4 t_{CP}	—	ns	

* : Oscillation time of oscillator is time that the amplitude reached the 90 %.
In the crystal oscillator, the oscillation time is between several ms to tens ms. In ceramic oscillator, the oscillation time is between hundreds of µs to several ms. In the external clock, the oscillation time is 0 ms.

Note : For t_{CP} (internal operating clock cycle time), refer to “(3) Clock Timings.”

Under Normal operation

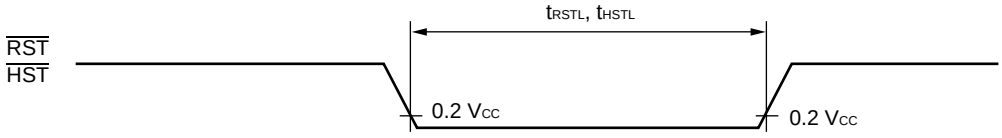

In Stop Mode

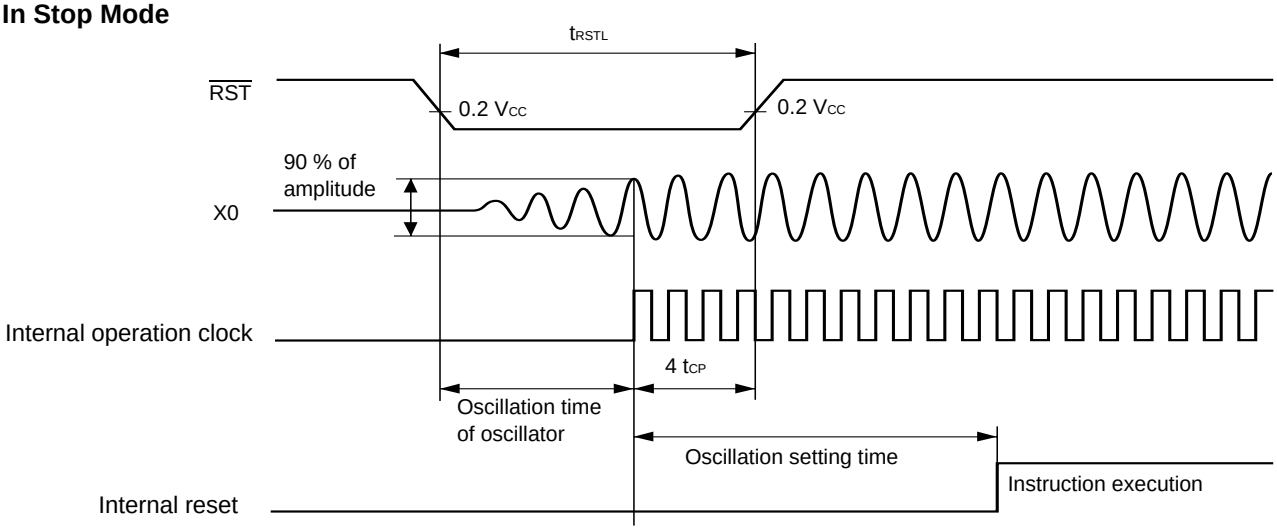

- **Measurement conditions for AC characteristics**

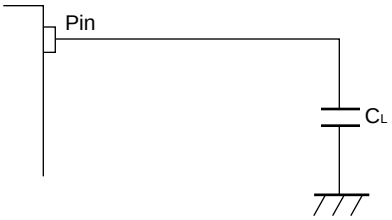

C_L is a load capacitance connected to a pin under test.

Capacitors of C_L = 30 pF must be connected to CLK and ALE pins, while C_L of 80 pF must be connected to address data bus (AD15 to AD00), $\overline{RD}$, $\overline{WRL}$, and $\overline{WRH}$ pins.

(2) Specification for Power-on Reset

(AV_{SS} = V_{SS} = 0.0 V, T_A = –40°C to +85°C)

Parameter	Symbol	Pin name	Condition	Value		Unit	Remarks
				Min	Max		
Power supply rising time	t_R	V_{CC}	—	0.05	30	ms	*
Power supply cut-off time	t_{OFF}	V_{CC}		4	—	ms	Due to repeated operations

* : V_{CC} must be kept lower than 0.2 V before power-on.

Note : • The above ratings are values for causing a power-on reset.
• There are internal registers which can be initialized only by a power-on reset. Apply power according to this rating to ensure initialization of the registers.

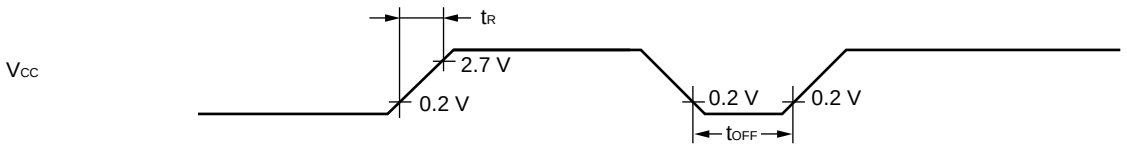

Sudden changes in the power supply voltage may cause a power-on reset.
To change the power supply voltage while the device is in operation, it is recommended to raise the voltage smoothly to suppress fluctuations as shown below.
In this case, change the supply voltage with the PLL clock not used. If the voltage drop is 1 V/s or fewer per second, however, you can use the PLL clock.

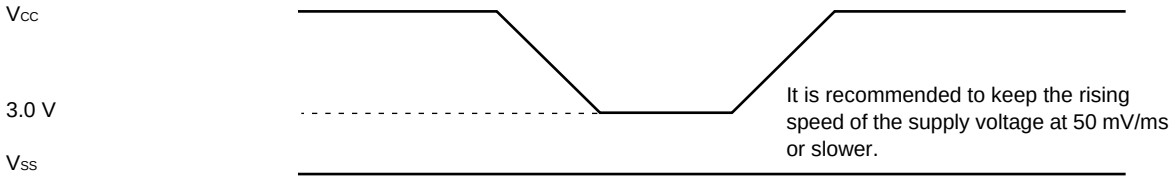

(3) Clock Timings

(AV_{CC} = V_{CC} = 5.0 V ±10%, AV_{SS} = V_{SS} = 0.0 V, T_A = –40°C to +85°C)

Parameter	Symbol	Pin name	Condition	Value			Unit	Remarks
				Min	Typ	Max		
Clock frequency	F_C	X0, X1		3	—	16	MHz	
	F_{CL}	X0A, X1A		—	32.768	—	kHz	
Clock cycle time	t_{HCYL}	X0, X1		62.5	—	333	ns	
	t_{LCYL}	X0A, X1A		—	30.5	—	µs	
Input clock pulse width	P_{WH}, P_{WL}	X0		10	—	—	ns	Recommend duty ratio of 30% to 70%
	P_{WLH}, P_{WLL}	X0A		—	15.2	—	µs	
Input clock rising/falling time	t_{CR}, t_{CF}	X0, X0A	—	—	—	5	ns	External clock operation
Internal operating clock frequency	f_{CP}	—		1.5	—	16	MHz	Main clock operation
	f_{LCP}	—		—	8.192	—	kHz	Subclock operation
Internal operating clock cycle time	t_{CP}	—		62.5	—	333	ns	External clock operation
	t_{LCP}	—		—	122.1	—	µs	Subclock operation
Frequency fluctuation rate locked	Δf	—		—	—	5	%	*

* : The frequency fluctuation rate is the maximum deviation rate of the preset center frequency when the multiplied PLL signal is locked.

$$\Delta f = \frac{|\alpha|}{f_O} \times 100\ (\%)$$

Center frequency

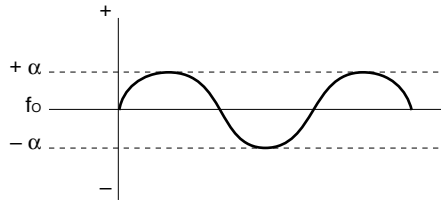

The PLL frequency deviation changes periodically from the preset frequency “(about CLK × (1CYC to 50 CYC)”, thus minimizing the chance of worst values to be repeated (errors are minimal and negligible for pulses with long intervals).

- **X0, X1 clock timing**

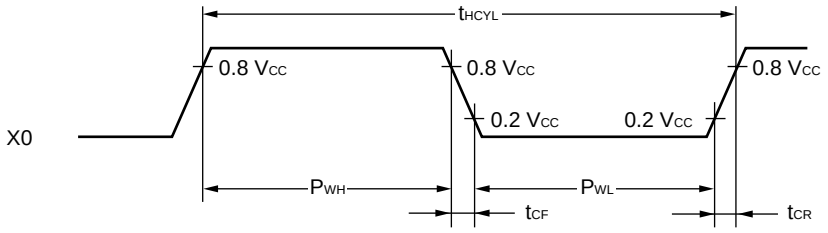

- **X0A, X1A clock timing**

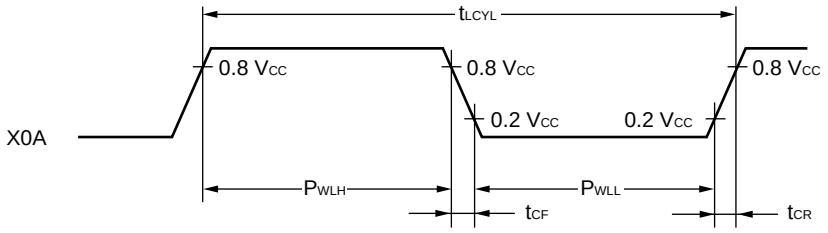

- **PLL operation guarantee range**

Relationship between internal operating clock frequency and power supply voltage

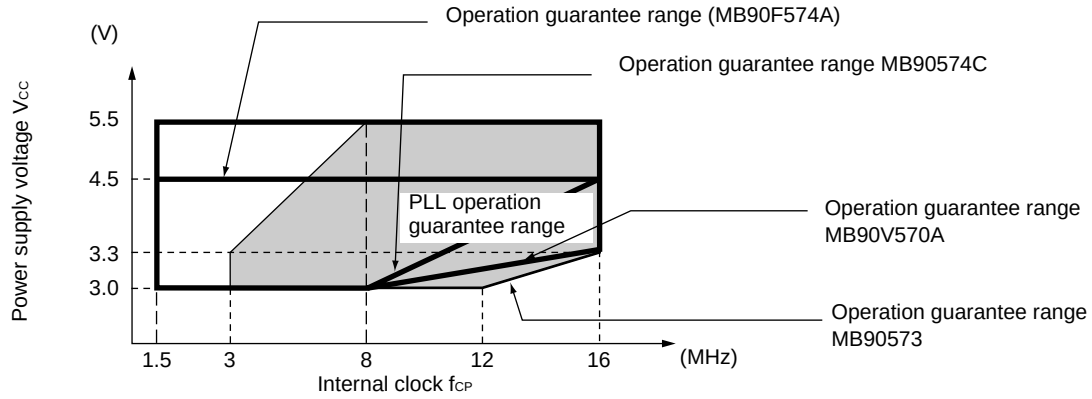

Relationship between oscillating frequency, internal operating clock frequency, and power supply voltage

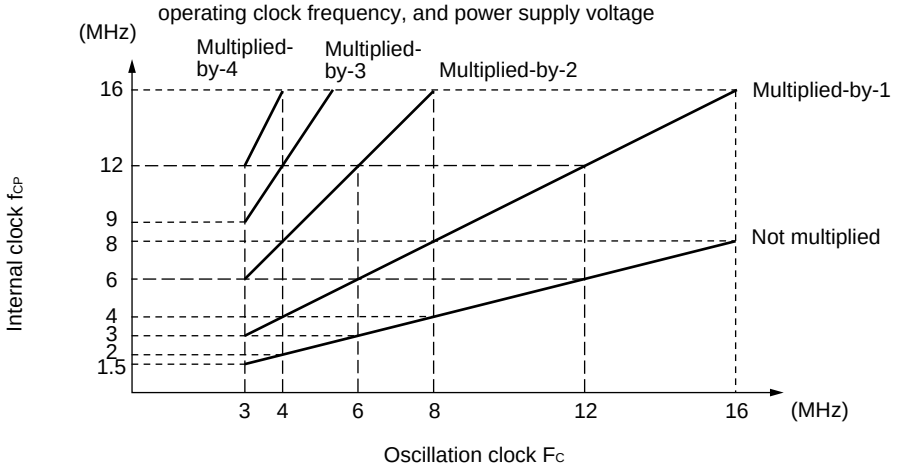

The AC ratings are measured for the following measurement reference voltages.

- **Input signal waveform**

Hystheresis input pin

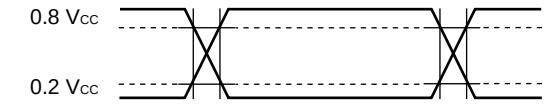

Pins other than hystheresis input/MD input

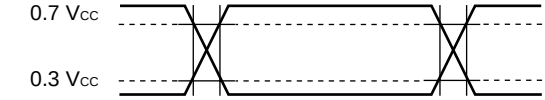

- **Output signal waveform**

Hystheresis input pin

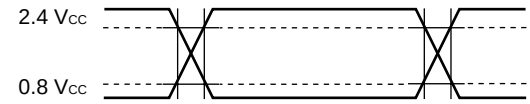

(4) Clock Output Timing

(AV_{CC} = V_{CC} = 5.0 V ±10%, AV_{SS} = V_{SS} = 0.0 V, T_A = –40°C to +85°C)

Parameter	Symbol	Pin name	Condition	Value		Unit	Remarks
				Min	Max		
Cycle time	t_{CYC}	CLK	—	62.5	—	ns	
CLK ↑ → CLK ↓	t_{CHCL}	CLK		20	—	ns	

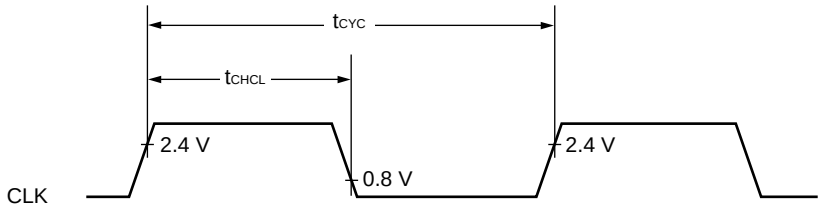

(5) Bus Read Timing

(AV_{CC} = V_{CC} = 5.0 V ±10%, AV_{SS} = V_{SS} = 0.0 V, T_A = –40°C to +85°C)

Parameter	Symbol	Pin name	Condition	Value		Unit	Remarks
				Min	Max		
ALE pulse width	t_{LHLL}	ALE	—	1 t_{CP}*/2 – 20	—	ns	
Effective address → ALE ↓ time	t_{AVLL}	ALE, A23 to A16, AD15 to AD00		1 t_{CP}*/2 – 20	—	ns	
ALE ↓ → address effective time	t_{LLAX}	ALE, AD15 to AD00		1 t_{CP}*/2 – 15	—	ns	
Effective address → $\overline{RD}$ ↓ time	t_{AVRL}	$\overline{RD}$, A23 to A16, AD15 to AD00		1 t_{CP}* – 15	—	ns	
Effective address → valid data input	t_{AVDV}	A23 to A16, AD15 to AD00		—	5 t_{CP}*/2 – 60	ns	
$\overline{RD}$ pulse width	t_{RLRH}	$\overline{RD}$		3 t_{CP}*/2 – 20	—	ns	
$\overline{RD}$ ↓ → valid data input	t_{RLDV}	$\overline{RD}$, AD15 to AD00		—	3 t_{CP}*/2 – 60	ns	
$\overline{RD}$ ↑ → data hold time	t_{RHDX}	$\overline{RD}$, AD15 to AD00		0	—	ns	
$\overline{RD}$ ↑ → ALE ↑ time	t_{RHLH}	ALE, $\overline{RD}$		1 t_{CP}*/2 – 15	—	ns	
$\overline{RD}$ ↑ → address effective time	t_{RHAX}	ALE, A23 to A16		1 t_{CP}*/2 – 10	—	ns	
Effective address → CLK ↑ time	t_{AVCH}	CLK, A23 to A16, AD15 to AD00		1 t_{CP}*/2 – 20	—	ns	
$\overline{RD}$ ↓ → CLK ↑ time	t_{RLCH}	CLK, $\overline{RD}$		1 t_{CP}*/2 – 20	—	ns	
ALE ↓ → $\overline{RD}$ ↓ time	t_{ALRL}	ALE, $\overline{RD}$		1 t_{CP}*/2 – 15	—	ns	

* : For t_{CP} (internal operating clock cycle time), refer to “(3) Clock Timings.”

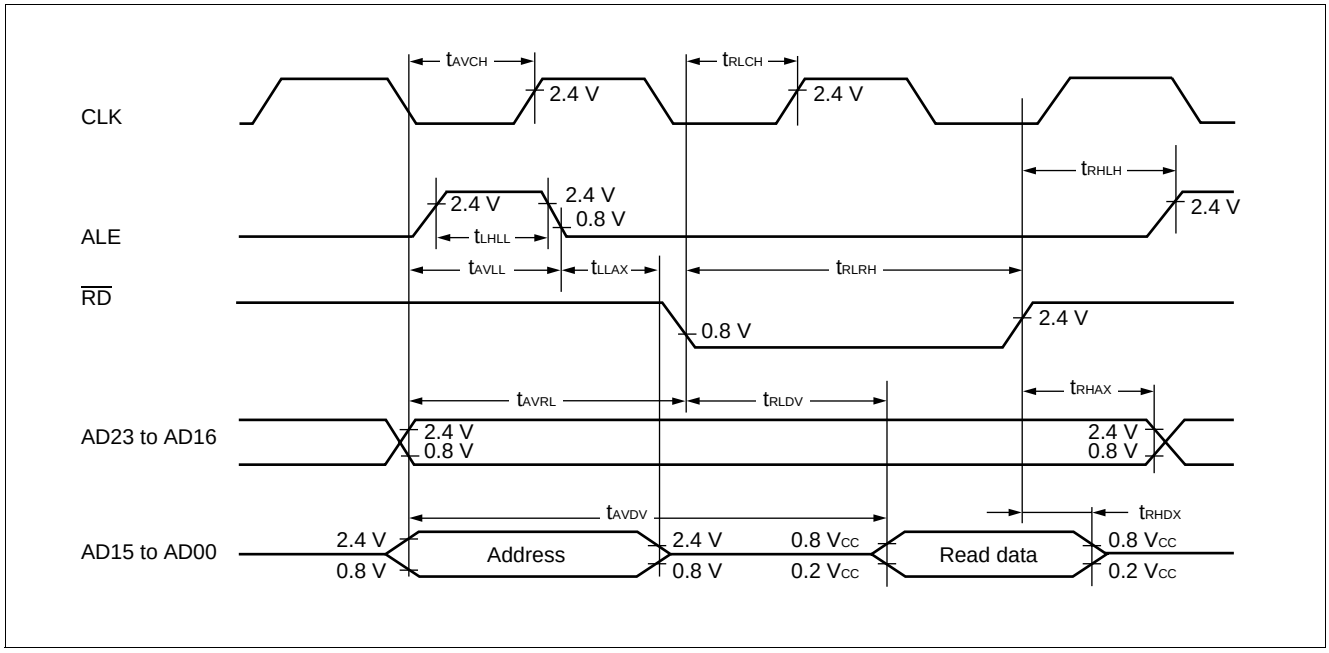
CLK
ALE
RD
AD23 to AD16
AD15 to AD00
tAVCH
tRLCH
tRHLH
tLHLL
tAVLL
tLLAX
tRLRH
tAVRL
tRLDV
tRHAX
tAVDV
tRHDX
2.4 V
0.8 V
Address
Read data
0.8 VCC
0.2 VCC

(6) Bus Write Timing

(AV_{CC} = V_{CC} = 5.0 V ±10%, AV_{SS} = V_{SS} = 0.0 V, T_A = –40°C to +85°C)

Parameter	Symbol	Pin name	Condition	Value		Unit	Remarks
				Min	Max		
Effective address → $\overline{WR}$ ↓ time	t_{AVWL}	$\overline{WRL}$, $\overline{WRH}$, A23 to A16, AD15 to AD00	—	1 t_{CP} – 15	—	ns	
$\overline{WR}$ pulse width	t_{WLWH}	$\overline{WRL}$, $\overline{WRH}$		3 t_{CP}*/2 – 20	—	ns	
Write data → $\overline{WR}$ ↑ time	t_{DVWH}	$\overline{WRL}$, $\overline{WRH}$, AD15 to AD00		3 t_{CP}*/2 – 20	—	ns	
$\overline{WR}$ ↑ → data hold time	t_{WHDX}	$\overline{WRL}$, $\overline{WRH}$, AD15 to AD00		20	—	ns	
$\overline{WR}$ ↑ → address effective time	t_{WHAX}	$\overline{WRL}$, $\overline{WRH}$, A23 to A16		1 t_{CP}*/2 – 10	—	ns	
$\overline{WR}$ ↑ → ALE ↑ time	t_{WHLH}	ALE, $\overline{WRL}$		1 t_{CP}*/2 – 15	—	ns	
$\overline{WR}$ ↓ → CLK ↑ time	t_{WLCH}	CLK, $\overline{WRH}$		1 t_{CP}*/2 – 20	—	ns	

* : For t_{CP} (internal operating clock cycle time), refer to “(3) Clock Timings.”

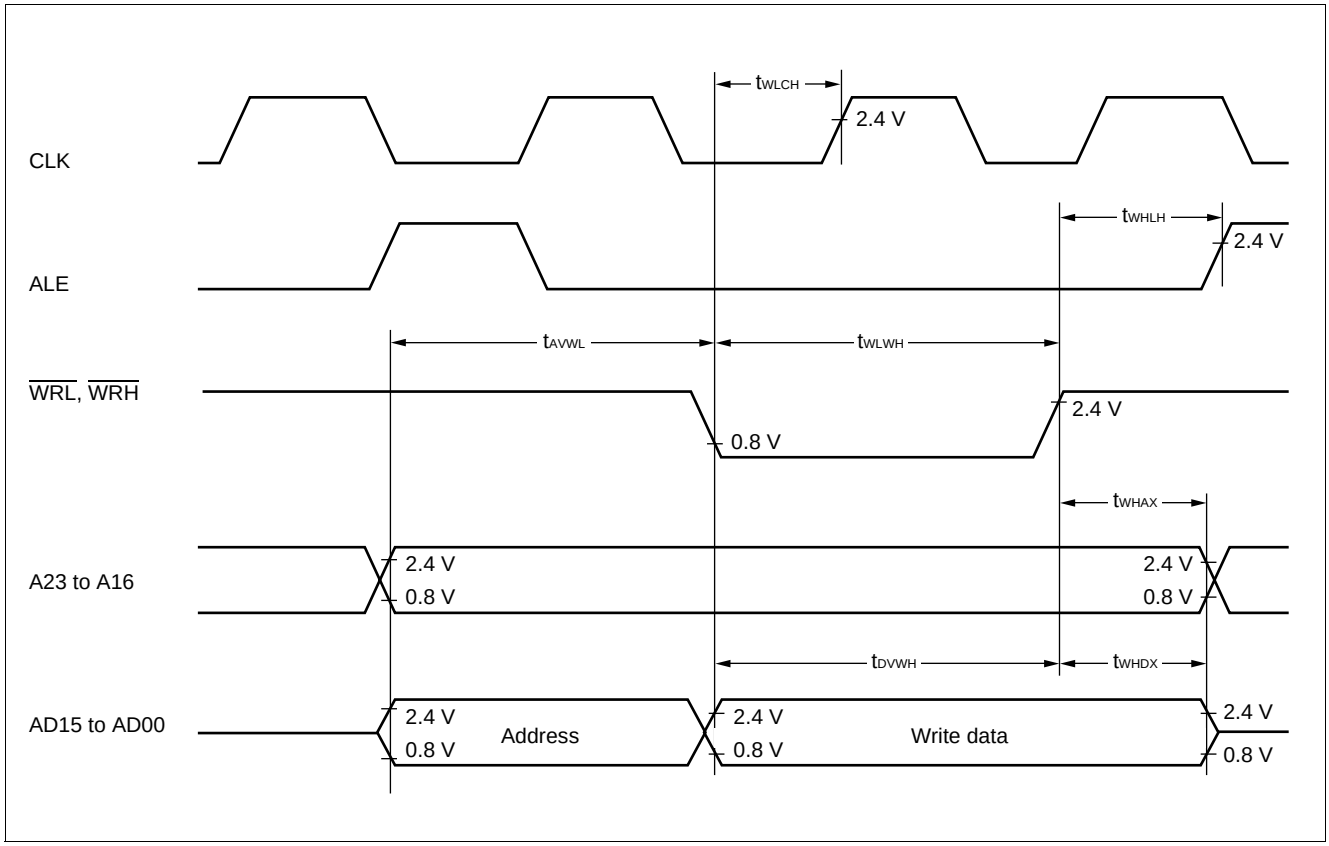

(7) Ready Input Timing

(AV_{CC} = V_{CC} = 5.0 V ±10%, AV_{SS} = V_{SS} = 0.0 V, T_A = –40°C to +85°C)

Parameter	Symbol	Pin name	Condition	Value		Unit	Remarks
				Min	Max		
RDY setup time	t_{RYHS}	RDY	—	45	—	ns	
RDY hold time	t_{RYHH}	RDY		0	—	ns	

Note : Use the automatic ready function when the setup time for the rising edge of the RDY signal is not sufficient.

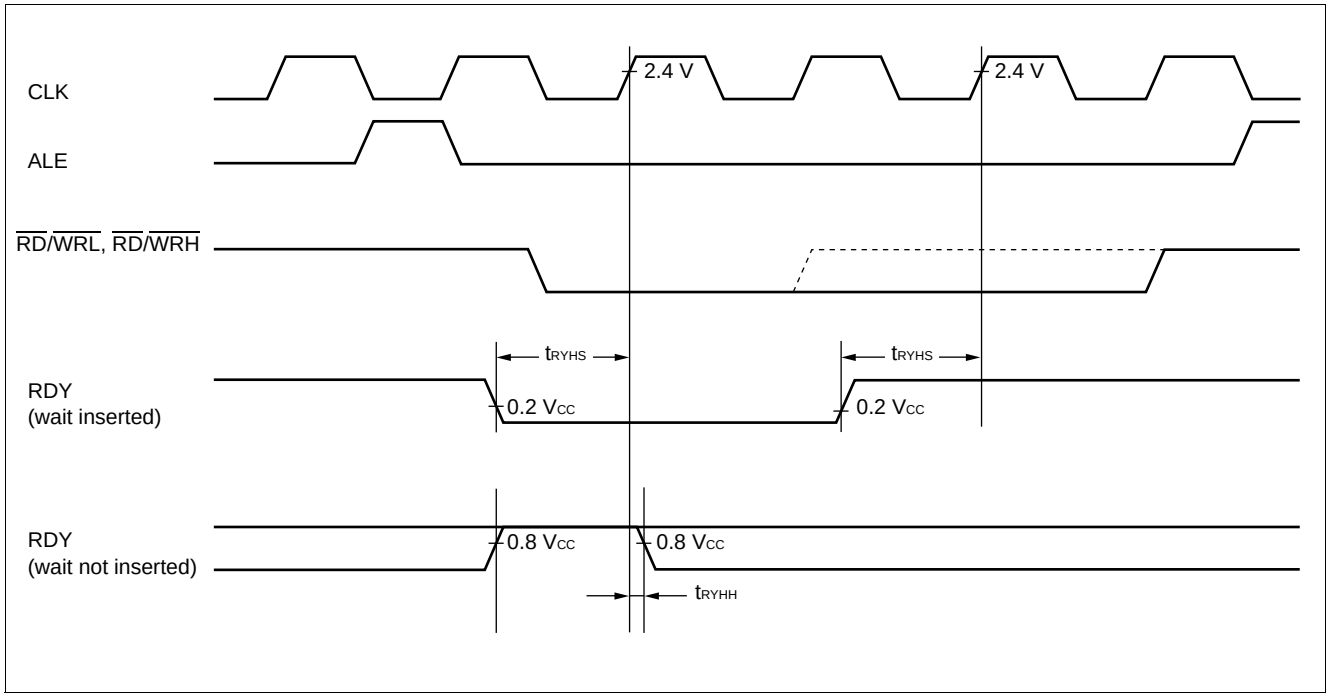

(8) Hold Timing

(AV_{CC} = V_{CC} = 5.0 V ±10%, AV_{SS} = V_{SS} = 0.0 V, T_A = –40°C to +85°C)

Parameter	Symbol	Pin name	Condition	Value		Unit	Remarks
				Min	Max		
Pins in floating status → $\overline{HAK}$ ↓ time	t_{XHAL}	$\overline{HAK}$	—	30	1 t_{CP}*	ns	
$\overline{HAK}$ ↑ → pin valid time	t_{HAHV}	$\overline{HAK}$		1 t_{CP}*	2 t_{CP}*	ns	

* : For t_{CP} (internal operating clock cycle time), refer to “(3) Clock Timings.”

Note : More than 1 machine cycle is needed before $\overline{HAK}$ changes after HRQ pin is fetched.

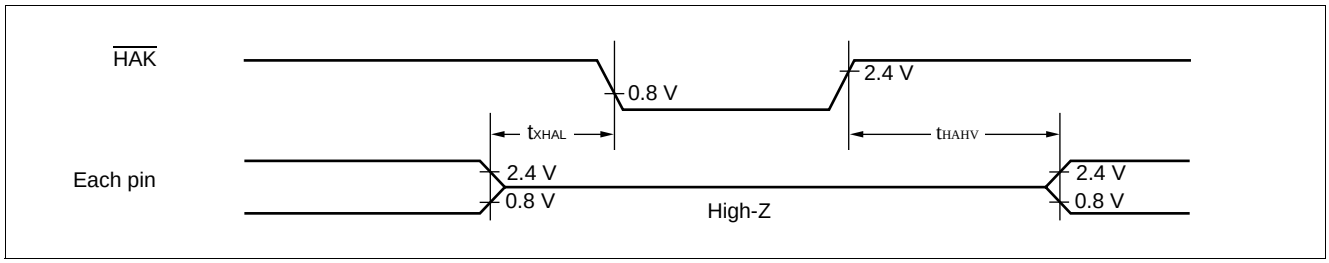

(9) UART0 (SCI), UART1 (SCI) Timing

(AV_{CC} = V_{CC} = 5.0 V ±10%, AV_{SS} = V_{SS} = 0.0 V, T_A = –40°C to +85°C)

Parameter	Symbol	Pin name	Condition	Value		Unit	Remarks
				Min	Max		
Serial clock cycle time	t_{SCYC}	SCK0 to SCK4	Internal shift clock mode C_L = 80 pF + 1 TTL for an output pin	8 t_{CP}*	—	ns	
SCK ↓ → SOT delay time	t_{SLOV}	SCK0 to SCK4, SOT0 to SOT4		– 80	80	ns	
Valid SIN → SCK ↑	t_{IVSH}	SCK0 to SCK4, SIN0 to SIN4		100	—	ns	
SCK ↑ → valid SIN hold time	t_{SHIX}	SCK0 to SCK4, SIN0 to SIN4		60	—	ns	
Serial clock “H” pulse width	t_{SHSL}	SCK0 to SCK4	External shift clock mode C_L = 80 pF + 1 TTL for an output pin	4 t_{CP}*	—	ns	
Serial clock “L” pulse width	t_{SLSH}	SCK0 to SCK4		4 t_{CP}*	—	ns	
SCK ↓ → SOT delay time	t_{SLOV}	SCK0 to SCK4, SOT0 to SOT4		—	150	ns	
Valid SIN → SCK ↑	t_{IVSH}	SCK0 to SCK4, SIN0 to SIN4		60	—	ns	
SCK ↑ → valid SIN hold time	t_{SHIX}	SCK0 to SCK4, SIN0 to SIN4		60	—	ns	

* : For t_{CP} (internal operating clock cycle time), refer to “(3) Clock Timings.”

Notes : • These are AC ratings in the CLK synchronous mode.
• C_L is the load capacitance value connected to pins while testing.

- **Internal shift clock mode**

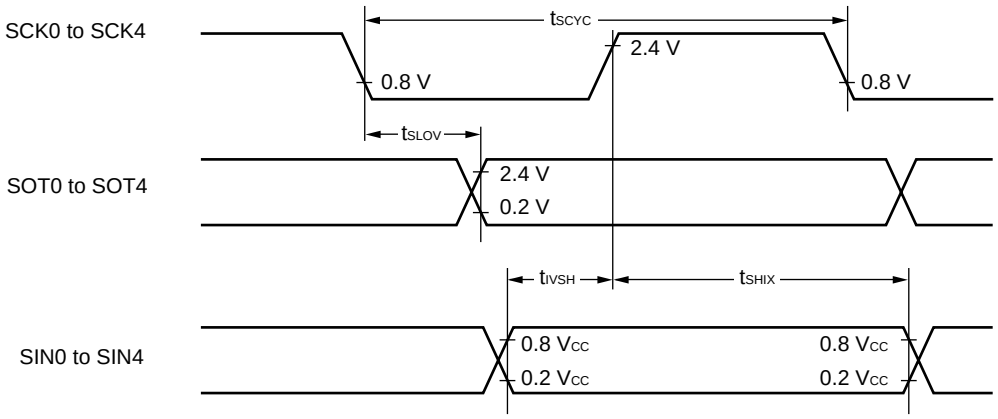

- **External shift clock mode**

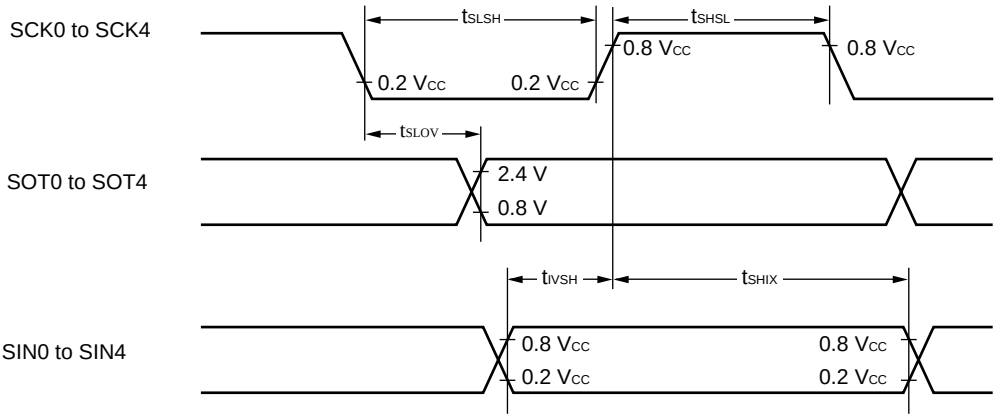

(10) Timer Input Timing

(AV_{CC} = V_{CC} = 5.0 V ±10%, AV_{SS} = V_{SS} = 0.0 V, T_A = –40°C to +85°C)

Parameter	Symbol	Pin name	Condition	Value		Unit	Remarks
				Min	Max		
Input pulse width	t_{TIWH}, t_{TIWL}	IN0, IN1	—	4 t_{CP}*	—	ns	

* : For t_{CP} (internal operating clock cycle time), refer to “(3) Clock Timings.”

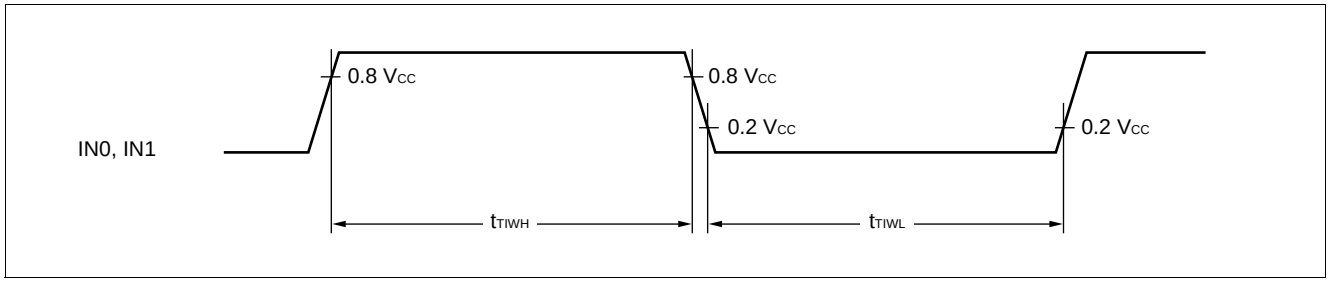

(11) Timer Output Timing

(AV_{CC} = V_{CC} = 5.0 V ±10%, AV_{SS} = V_{SS} = 0.0 V, T_A = –40°C to +85°C)

Parameter	Symbol	Pin name	Condition	Value		Unit	Remarks
				Min	Max		
CLK ↑ → T_{OUT} transition time	t_{TO}	OUT0 to OUT3, PPG0, PPG1	—	30	—	ns	

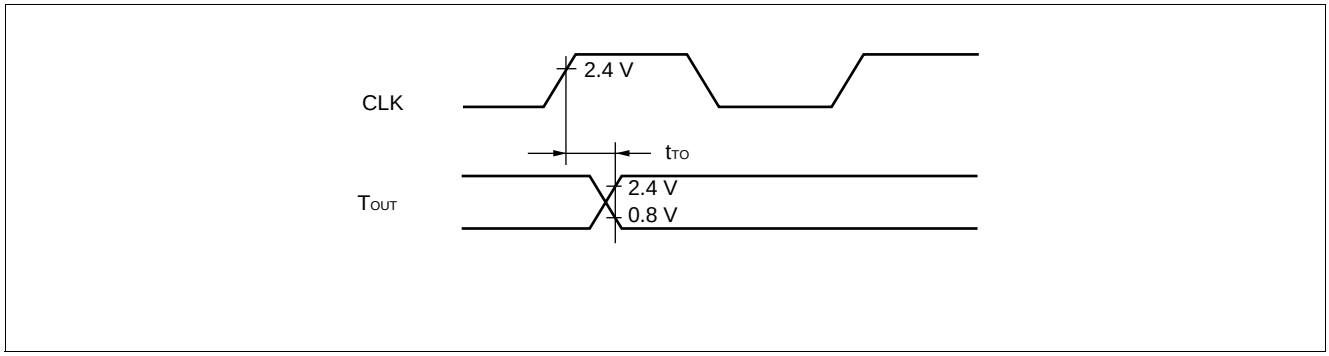

(12) Trigger Input Timing

(AV_{CC} = V_{CC} = 5.0 V ±10%, AV_{SS} = V_{SS} = 0.0 V, T_A = –40°C to +85°C)

Parameter	Symbol	Pin name	Condition	Value		Unit	Remarks
				Min	Max		
Input pulse width	t_{TRGH} t_{TRGL}	IRQ0 to IRQ7, ADTG, IN0, IN1	—	5 t_{CP} *	—	ns	Under normal operation
		IRQ0 to IRQ5		1	—	µs	In stop mode

* : For t_{CP} (internal operating clock cycle time), refer to “(3) Clock Timings.”

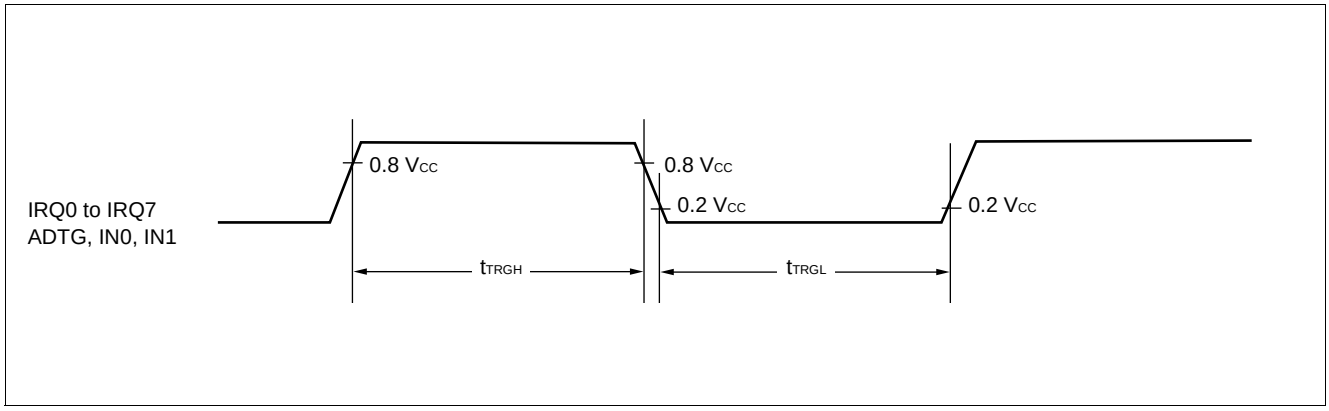

(13) Chip Select Output Timing

(AV_{CC} = V_{CC} = 5.0 V ±10%, AV_{SS} = V_{SS} = 0.0 V, T_A = –40°C to +85°C)

Parameter	Symbol	Pin name	Condition	Value		Unit	Remarks
				Min	Max		
Valid chip select output → Valid data input time	t_{SVDV}	CS0 to CS7, AD15 to AD00	—	—	5 t_{CP}*/2 – 60	ns	
$\overline{RD}$ ↑ → chip select output effective time	t_{RHSV}	$\overline{RD}$, CS0 to CS7		1 t_{CP}*/2 – 10	—	ns	
$\overline{WR}$ ↑ → chip select output effective time	t_{WHSV}	CS0 to CS7, $\overline{WRL}$, $\overline{WRH}$		1 t_{CP}*/2 – 10	—	ns	
Valid chip select output → CLK ↑ time	t_{SVCH}	CLK, CS0 to CS7		1 t_{CP}*/2 – 20	—	ns	

* : For t_{CP} (internal operating clock cycle time), refer to “(3) Clock Timings.”

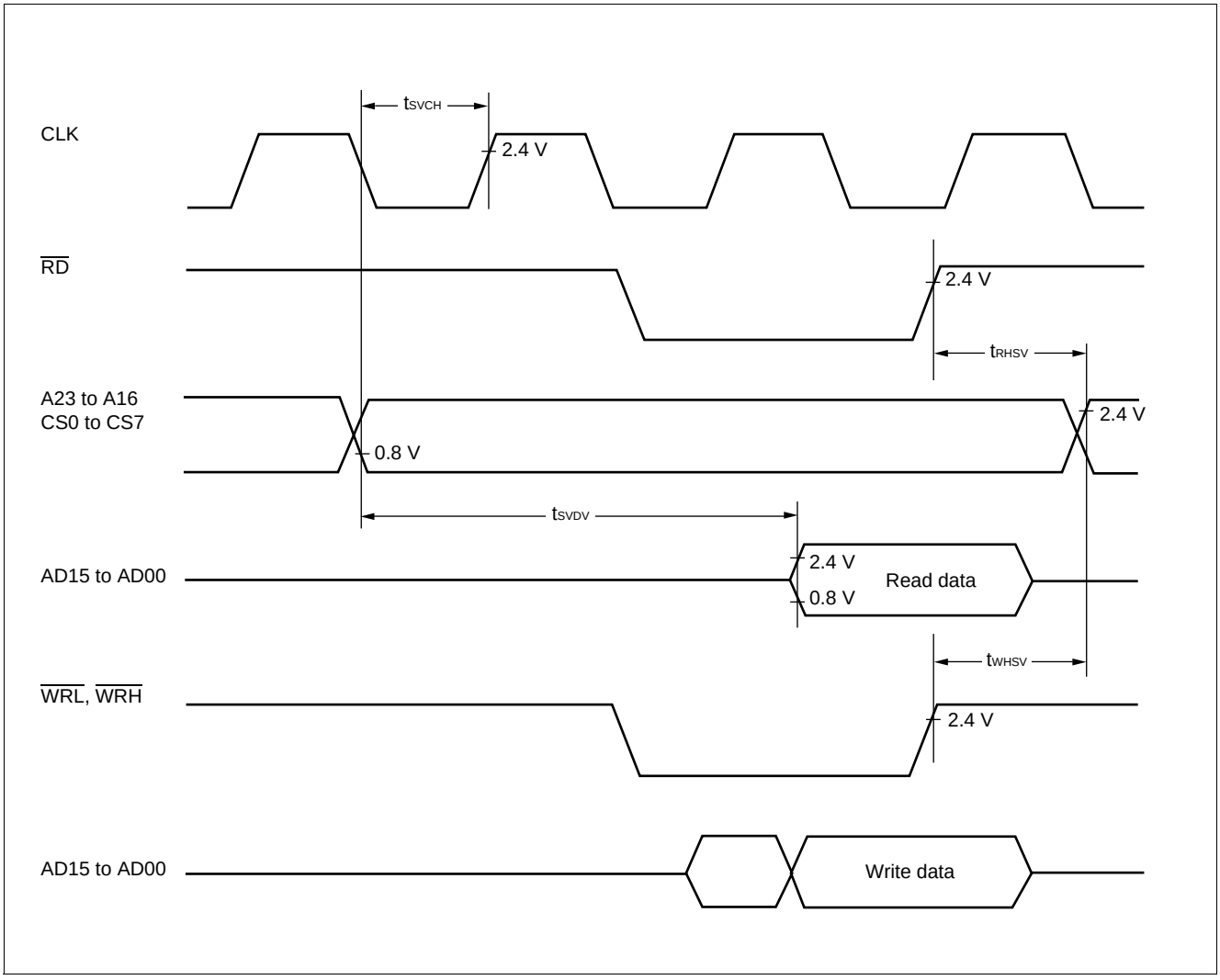

(14) I²C Timing

(AV_{CC} = V_{CC} = 2.7 V to 5.5 V, AV_{SS} = V_{SS} = 0.0 V, T_A = –40°C to +85°C)

Parameter	Symbol	Pin name	Condition	Value		Unit	Remarks
				Min	Max		
Internal clock cycle time	t_{CP}	—	—	62.5	666	ns	All products
Start condition output	t_{STAO}	SDA,SCL		$t_{CP}\times m\times n/2-20$	$t_{CP}\times m\times n/2+20$	ns	Only as master
Stop condition output	t_{STOO}			$t_{CP}(m\times n/2+4)-20$	$t_{CP}(m\times n/2+4)+20$	ns	
Start condition detection	t_{STAI}			$3t_{CP}+40$	—	ns	Only as slave
Stop condition detection	t_{STOI}			$3t_{CP}+40$	—	ns	
SCL output “L” width	t_{LOWO}	SCL		$t_{CP}\times m\times n/2-20$	$t_{CP}\times m\times n/2+20$	ns	Only as master
SCL output “H” width	t_{HIGHO}			$t_{CP}(m\times n/2+4)-20$	$t_{CP}(m\times n/2+4)+20$	ns	
SDA output delay time	t_{DOO}	SDA,SCL		$2t_{CP}-20$	$2t_{CP}+20$	ns	
Setup after SDA output interrupt period	t_{DOSUO}			$4t_{CP}-20$	—	ns	
SCL input “L” width	t_{LOWI}	SCL		$3t_{CP}+40$	—	ns	
SCL input “H” width	t_{HIGHI}			$t_{CP}+40$	—	ns	
SDA input setup time	t_{SUI}	SDA,SCL		40	—	ns	
SDA input hold time	t_{HOI}			0	—	ns	

Notes : • “m” and “n” in the above table represent the values of shift clock frequency setting bits (CS4-CS0) in the clock control register “ICCR”. For details, refer to the register description in the hardware manual.
• t_{DOSUO} represents the minimum value when the interrupt period is equal to or greater than the SCL “L” width.
• The SDA and SCL output values indicate that rise time is 0 ns.
• For t_{CP} (internal operating clock cycle time), refer to “(3) Clock Timings.”

- **I²C interface [data transmitter (master/slave)]**

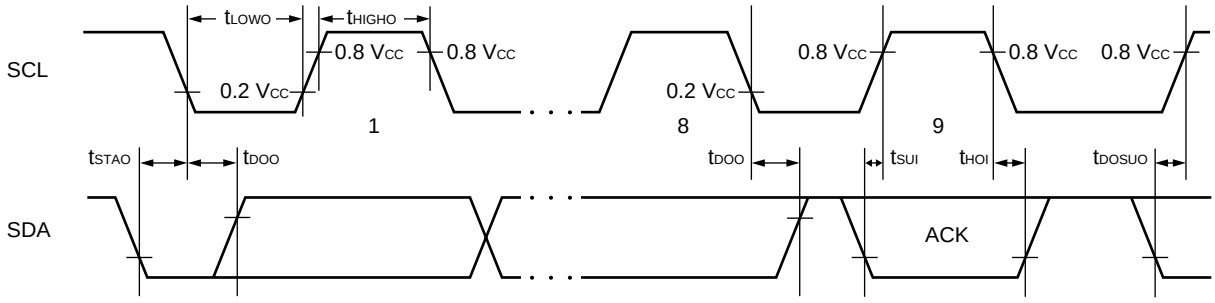

- **I²C interface [data receiver (master/slave)]**

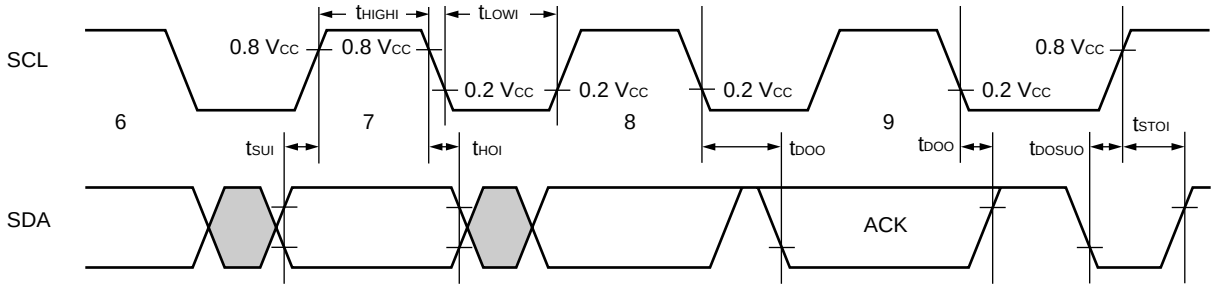

(15) Pulse Width on External Interrupt Pin at Return from STOP Mode

(AV_{CC} = V_{CC} = 2.7 V to 5.5 V, AV_{SS} = V_{SS} = 0.0 V, TA = –40 °C to +85 °C)

Parameter	Symbol	Pin name	Condition	Value		Unit	Remarks
				Min	Max		
Input pulse width	t_{IRQWH} t_{IRQWL}	IRQ2 to IRQ7	—	$6t_{CP}$ *	—	ns	

* : For t_{CP} (internal operating clock cycle time), refer to “(3) Clock Timings.”

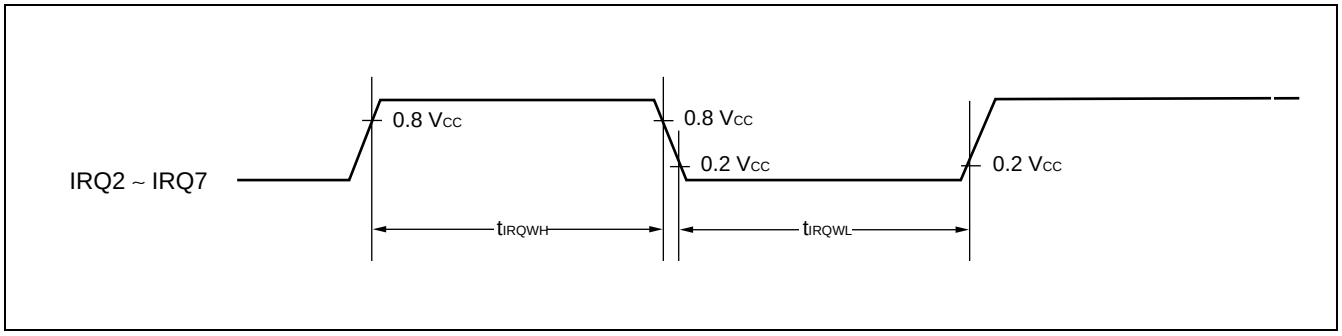

5. A/D Converter Electrical Characteristics

(AV_{CC} = V_{CC} = 2.7 V to 5.5 V, AV_{SS} = V_{SS} = 0.0 V, 2.7 V ≦ AVRH – AVRL, T_A = –40°C to +85°C)

Parameter	Symbol	Pin name	Condition	Value			Unit
				Min	Typ	Max	
Resolution	—	—	—	—	8/10	—	bit
Total error	—	—		—	—	±5.0	LSB
Non-linear error	—	—		—	—	±2.5	LSB
Differential linearity error	—	—		—	—	±1.9	LSB
Zero transition voltage	V_{OT}	AN0 to AN7		AVRL –3.5 LSB	AVRL –0.5 LSB	AVRL +4.5 LSB	V
Full-scale transition voltage	V_{FST}	AN0 to AN7		AVRH –6.5 LSB	AVRH –1.5 LSB	AVRH +1.5 LSB	V
A/D conversion time	—	—	V_{CC} = 5.0 V ±10% at machine clock of 16 MHz	416t_{CP}	—	—	µs
Sampling period	—	—	V_{CC} = 5.0 V ±10% at machine clock of 6 MHz	64t_{CP}	—	—	µs
Analog port input current	I_{AIN}	AN0 to AN7	—	—	—	10	µA
Analog input voltage	V_{AIN}	AN0 to AN7		AVRL	—	AVRH	V
Reference voltage	—	AVRH		AVRL +3.0	—	AV_{CC}	V
	—	AVRL		0	—	AVRH –3.0	V
Power supply current	I_A	AV_{CC}		—	5	—	mA
	I_{AH}	AV_{CC}	CPU stopped and 8/10-bit A/D converter not in operation (V_{CC} = AV_{CC} = AVRH = 5.0 V)	—	—	5	µA
Reference voltage supply current	I_R	AVRH	—	—	400	—	µA
	I_{RH}	AVRH	CPU stopped and 8/10-bit A/D converter not in operation (V_{CC} = AV_{CC} = AVRH = 5.0 V)	—	—	5	µA
Offset between channels	—	AN0 to AN7	—	—	—	4	LSB

6. A/D Converter Glossary

Resolution: Analog changes that are identifiable with the A/D converter

Linearity error: The deviation of the straight line connecting the zero transition point (“00 0000 0000” ↔ “00 0000 0001”) with the full-scale transition point (“11 1111 1110” ↔ “11 1111 1111”) from actual conversion characteristics

Differential linearity error: The deviation of input voltage needed to change the output code by 1 LSB from the theoretical value

Total error: The total error is defined as a difference between the actual value and the theoretical value, which includes zero-transition error/full-scale transition error and linearity error.

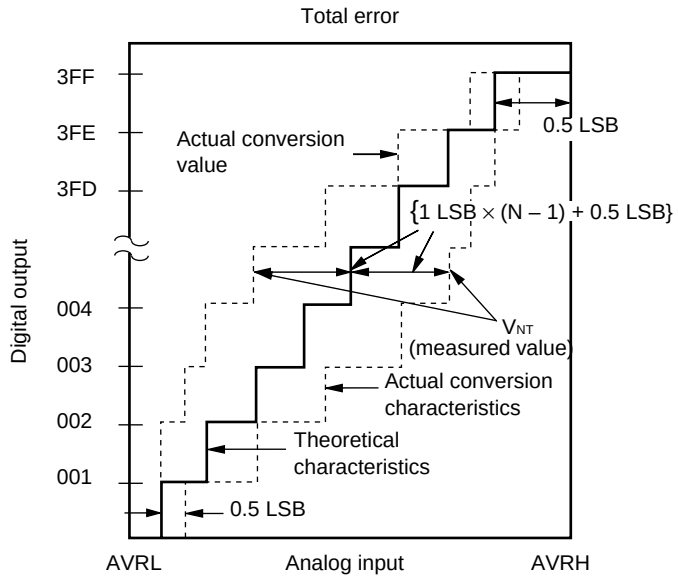

1 LSB = (Theoretical value) $\frac{AVRH - AVRL}{1024}$ [V]

Total error for digital output N = $\frac{V_{NT} - \{1\ LSB \times (N - 1) + 0.5\ LSB\}}{1\ LSB}$ [LSB]

V_{OT} (Theoretical value) = AVRL + 0.5 LSB[V]

V_{NT}: Voltage at a transition of digital output from (N – 1) to N

V_{FST} (Theoretical value) = AVRH – 1.5 LSB[V]

(Continued)

(Continued)

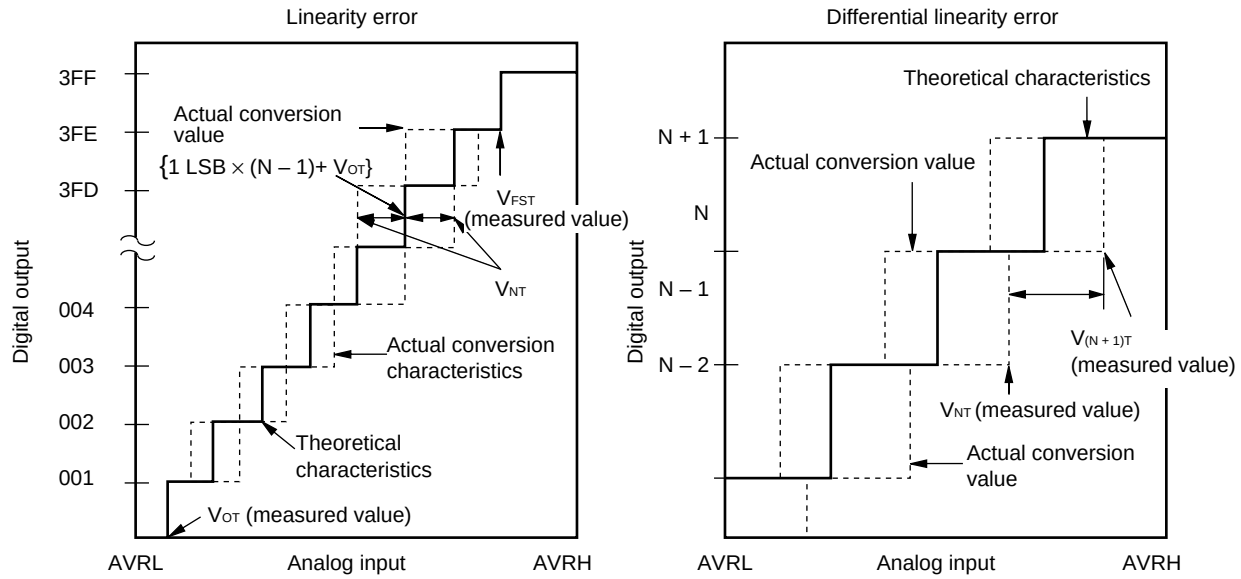

$$\text{Linearity error of digital output N} = \frac{V_{NT} - \{1\ \text{LSB} \times (N - 1) + V_{OT}\}}{1\ \text{LSB}}\ [\text{LSB}]$$

$$\text{Differential linearity error of digital N} = \frac{V_{(N+1)T} - V_{NT}}{1\ \text{LSB}} - 1\ \text{LSB}\ [\text{LSB}]$$

$$1\ \text{LSB} = \frac{V_{FST} - V_{OT}}{1022}\ [\text{V}]$$

V_{OT}: Voltage at transition of digital output from "000_H" to "001_H"
V_{FST}: Voltage at transition of digital output from "$3FE_H$" to "$3FF_H$"

7. Notes on Using A/D Converter

Select the output impedance value for the external circuit of analog input according to the following conditions. Output impedance values of the external circuit MB90V570A/573 are 5 kΩ or lower, MB90F574A/574C are 10 kΩ or lower are recommended.

When capacitors are connected to external pins, the capacitance of several thousand times the internal capacitor value is recommended to minimized the effect of voltage distribution between the external capacitor and internal capacitor.

When the output impedance of the external circuit is too high, the sampling period for analog voltages may not be sufficient (sampling period = 4.00 µs @machine clock of 16 MHz).

- **Equipment of analog input circuit model**

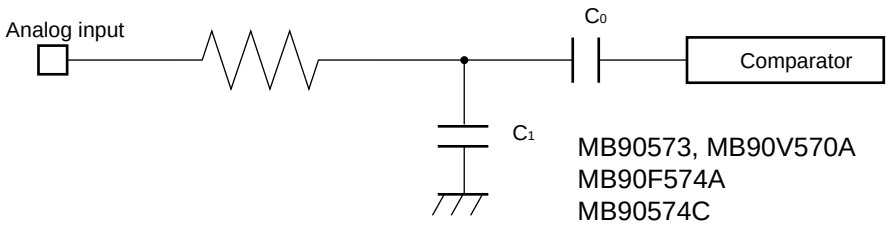

MB90573, MB90V570A	R ≅ 3.2 kΩ, C ≅ 30 pF
MB90F574A	R ≅ 7.1 kΩ, C ≅ 48.3 pF
MB90574C	R ≅ 2.2 kΩ, C ≅ 45 pF

Note : Listed values must be considered as standards.

- **Error**

  The smaller the | AVRH – AVRL |, the greater the error would become relatively.

8. D/A Converter Electrical Characteristics

(AV_{CC} = V_{CC} = DV_{CC} = 5.0 V ±10%, AV_{SS} = V_{SS} = DV_{SS} = 0.0 V, T_A = –40°C to +85°C)

Parameter	Symbol	Pin name	Value			Unit	Remarks
			Min	Typ	Max		
Resolution	—	—	—	8	—	bit	
Differential linearity error	—	—	—	—	±0.9	LSB	
Absolute accuracy	—	—	—	—	±1.2	%	
Linearity error	—	—	—	—	±1.5	LSB	
Conversion time	—	—	—	10	20	µs	Load capacitance: 20 pF
Analog reference voltage	—	DV_{CC}	V_{SS} + 3.0	—	AV_{CC}	V	
Reference voltage supply current	I_{DVR}	DV_{CC}	—	120	300	µA	Conversion under no load
	I_{DVRS}	DV_{CC}	—	—	10	µA	In sleep mode
Analog output impedance	—	—	—	20	—	kΩ	

9. Flash Memory Program/Erase Characteristics

Parameter	Condition	Value			Unit	Remarks
		Min	Typ	Max		
Sector erase time	T_A = + 25°C V_{CC} = 5.0 V	—	1.5	30	s	Except for the write time before internal erase operation
Chip erase time		—	13.5	—	s	Except for the write time before internal erase operation
Word (16bit width) programming time		—	32	1,000	µs	Except for the over head time of the system
Program/Erase time	—	10,000	—	—	cycle	
Data hold time	—	100,000	—	—	h	

■ EXAMPLE CHARACTERISTICS

(1) Power Supply Current (MB90573)

I_{CC} - V_{CC}

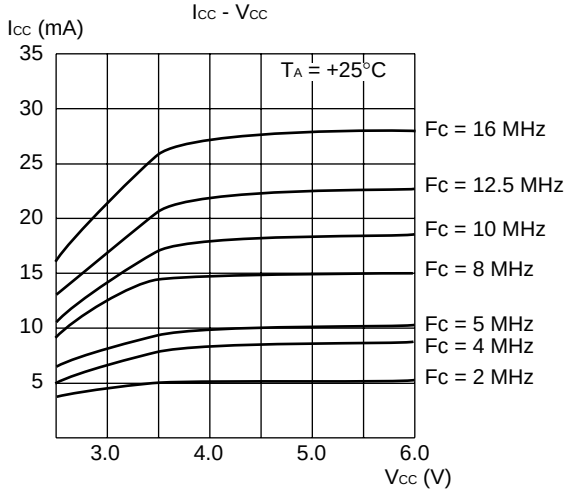

I_{CCS} - V_{CC}

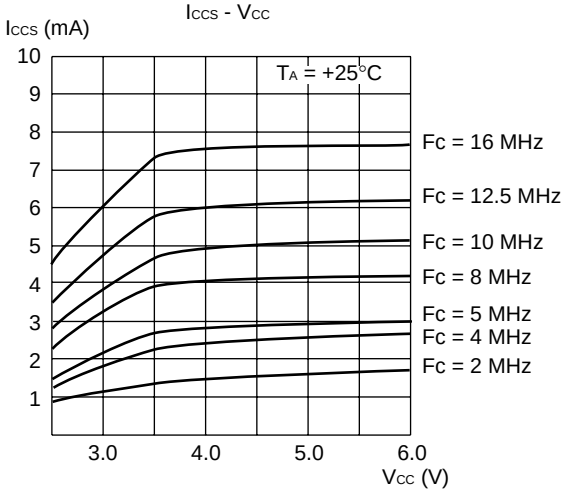

I_{CC} - T_A

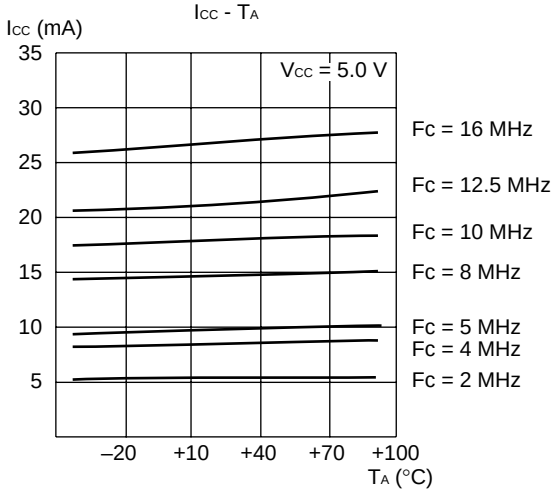

I_{CCS} - T_A

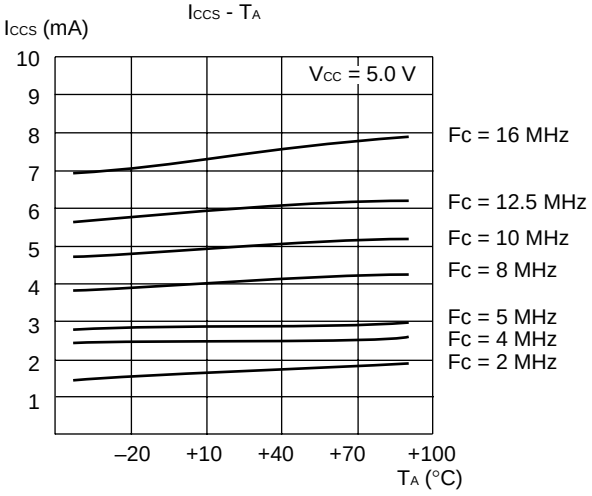

I_{CCL} - V_{CC}

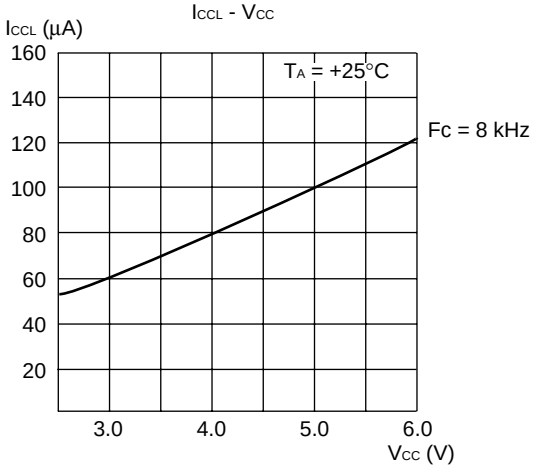

I_{CCLS} - V_{CC}

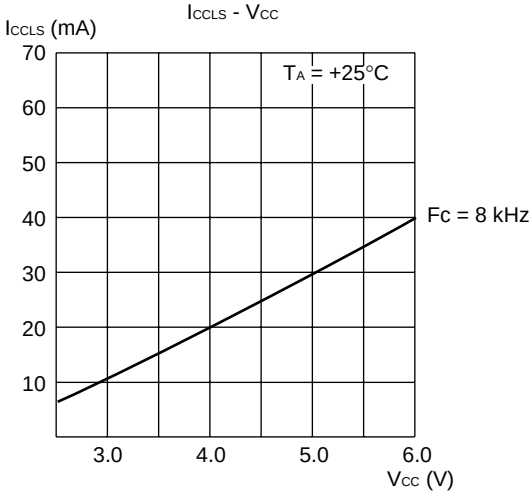

(Continued)

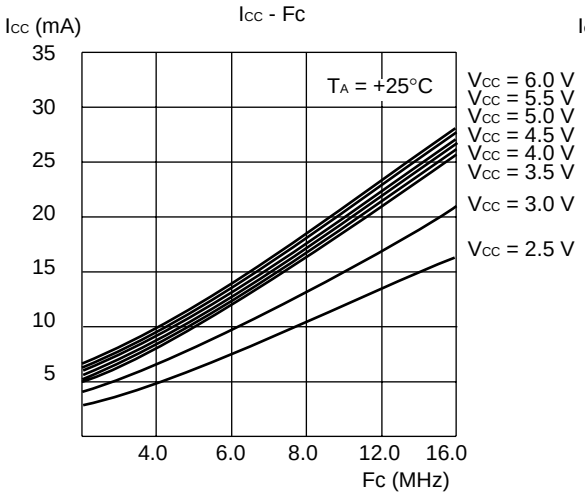
ICC - Fc
ICC (mA)
TA = +25°C
VCC = 6.0 V
VCC = 5.5 V
VCC = 5.0 V
VCC = 4.5 V
VCC = 4.0 V
VCC = 3.5 V
VCC = 3.0 V
VCC = 2.5 V
35
30
25
20
15
10
5
4.0
6.0
8.0
12.0
16.0
Fc (MHz)

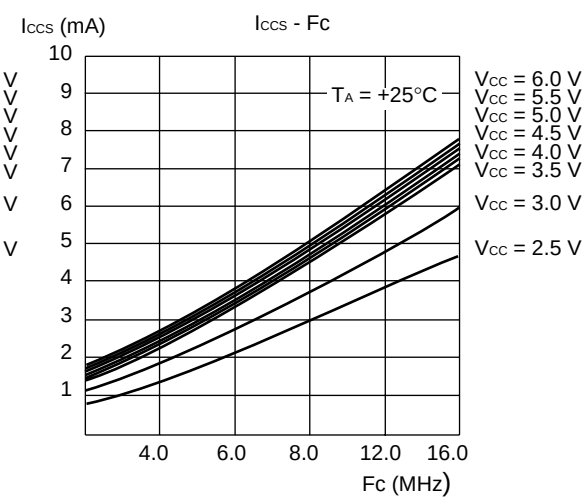
ICCS - Fc
ICCS (mA)
TA = +25°C
VCC = 6.0 V
VCC = 5.5 V
VCC = 5.0 V
VCC = 4.5 V
VCC = 4.0 V
VCC = 3.5 V
VCC = 3.0 V
VCC = 2.5 V
10
9
8
7
6
5
4
3
2
1
4.0
6.0
8.0
12.0
16.0
Fc (MHz)

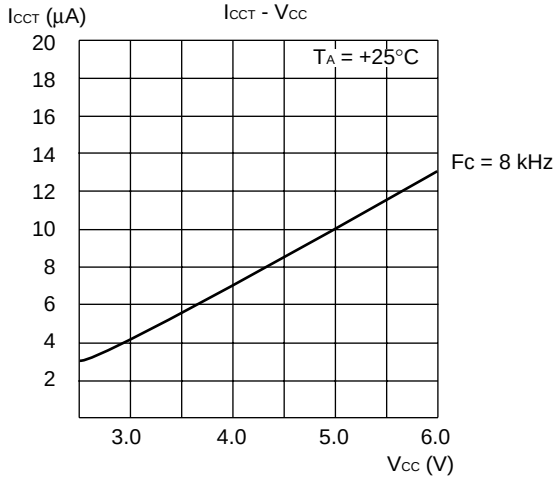
ICCT - VCC
ICCT (µA)
TA = +25°C
Fc = 8 kHz
20
18
16
14
12
10
8
6
4
2
3.0
4.0
5.0
6.0
VCC (V)

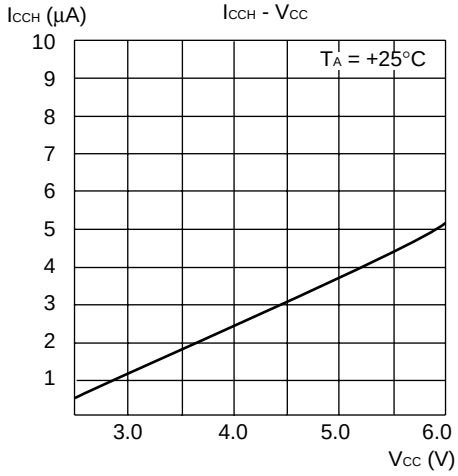
ICCH - VCC
ICCH (µA)
TA = +25°C
10
9
8
7
6
5
4
3
2
1
3.0
4.0
5.0
6.0
VCC (V)

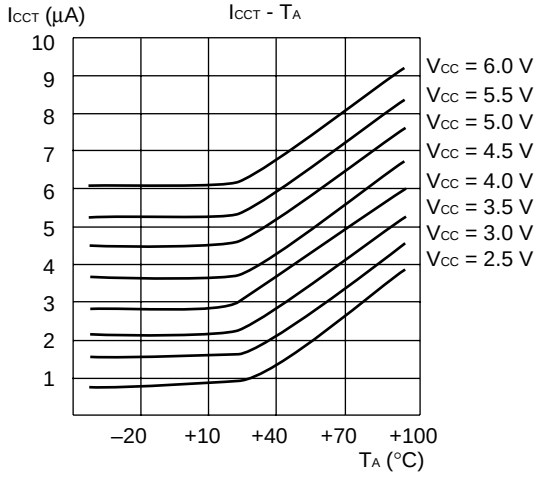
ICCT - TA
ICCT (µA)
VCC = 6.0 V
VCC = 5.5 V
VCC = 5.0 V
VCC = 4.5 V
VCC = 4.0 V
VCC = 3.5 V
VCC = 3.0 V
VCC = 2.5 V
10
9
8
7
6
5
4
3
2
1
–20
+10
+40
+70
+100
TA (°C)

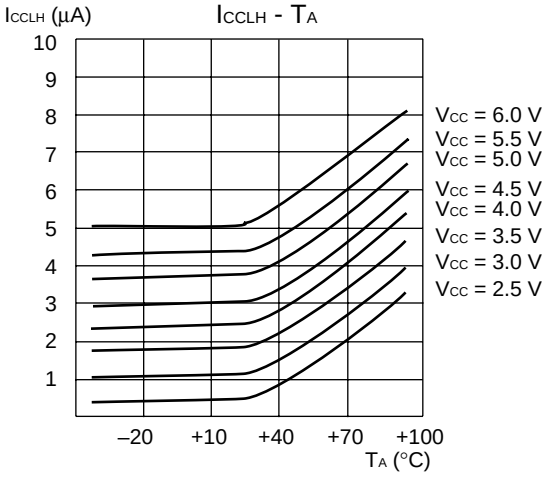
ICCLH - TA
ICCLH (µA)
VCC = 6.0 V
VCC = 5.5 V
VCC = 5.0 V
VCC = 4.5 V
VCC = 4.0 V
VCC = 3.5 V
VCC = 3.0 V
VCC = 2.5 V
10
9
8
7
6
5
4
3
2
1
–20
+10
+40
+70
+100
TA (°C)

(Continued)

(Continued)

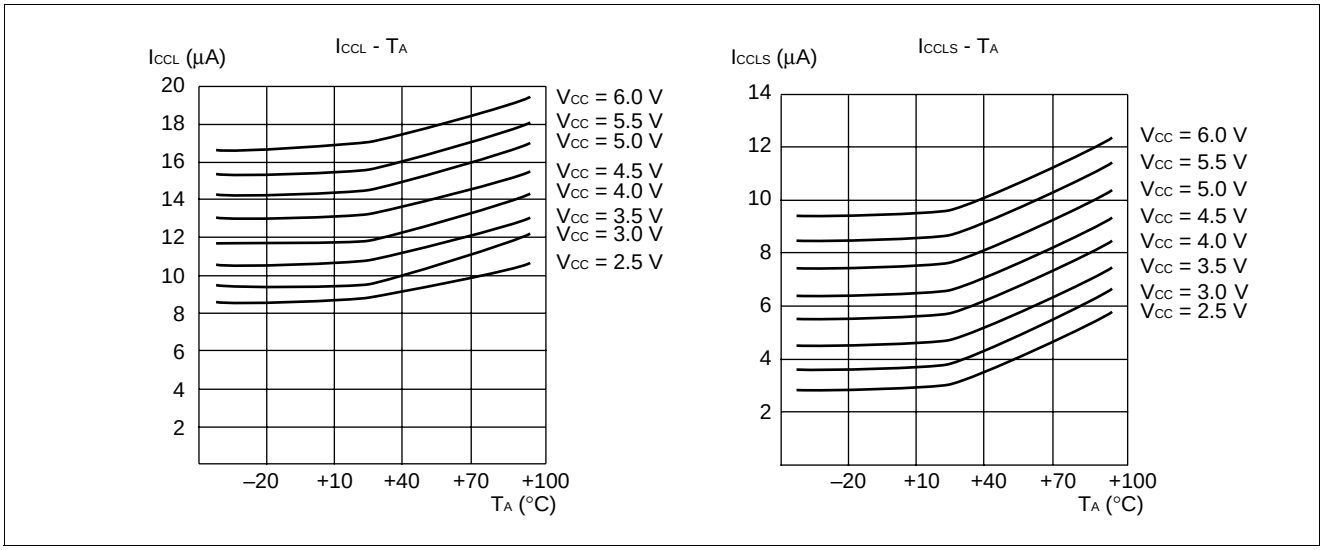
ICCL - TA
ICCL (µA)
20
18
16
14
12
10
8
6
4
2
–20
+10
+40
+70
+100
TA (°C)
VCC = 6.0 V
VCC = 5.5 V
VCC = 5.0 V
VCC = 4.5 V
VCC = 4.0 V
VCC = 3.5 V
VCC = 3.0 V
VCC = 2.5 V
ICCLS - TA
ICCLS (µA)
14
12
10
8
6
4
2
–20
+10
+40
+70
+100
TA (°C)
VCC = 6.0 V
VCC = 5.5 V
VCC = 5.0 V
VCC = 4.5 V
VCC = 4.0 V
VCC = 3.5 V
VCC = 3.0 V
VCC = 2.5 V

(2) Power Supply Current (MB90F574A)

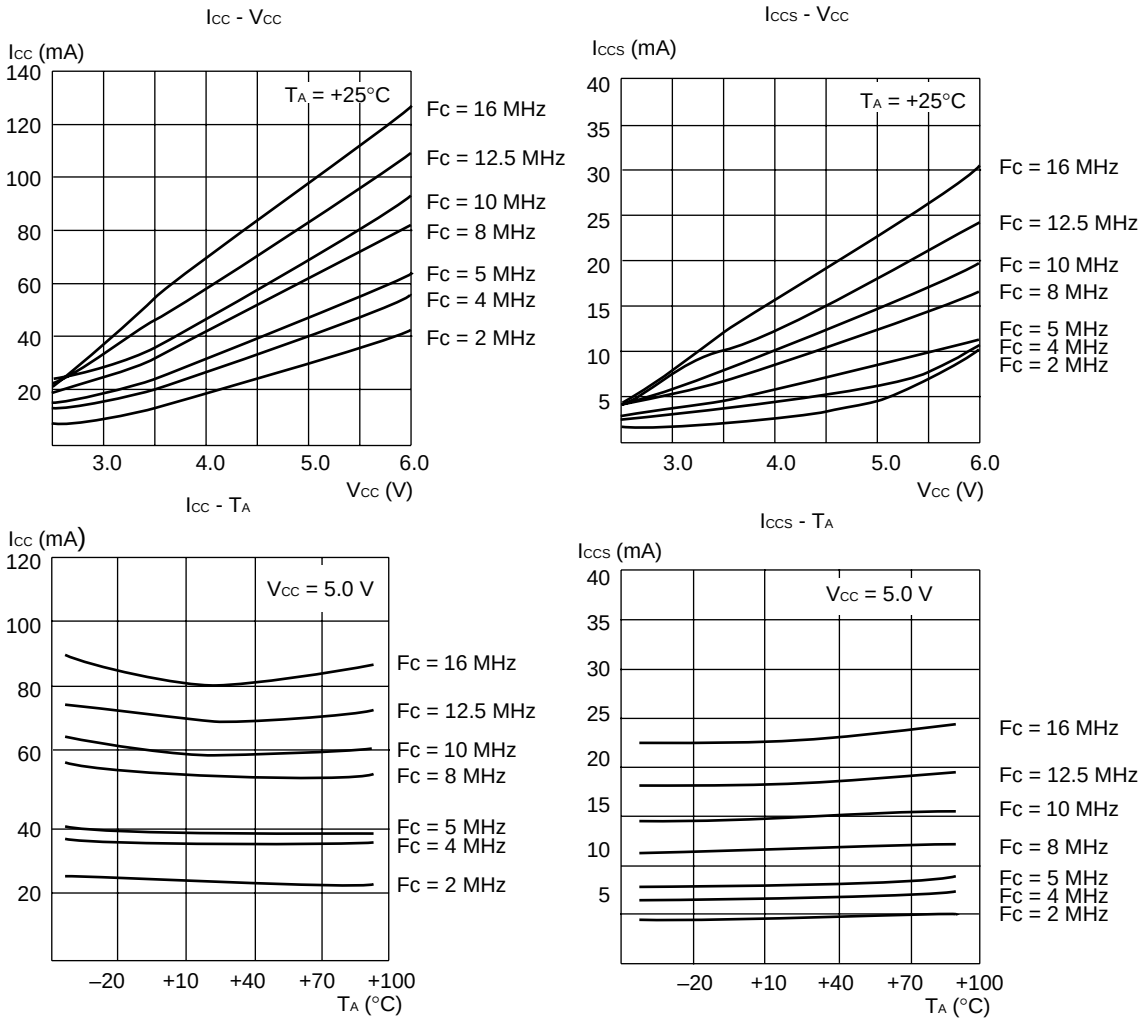

(Continued)

I_{CCLS} - V_{CC}

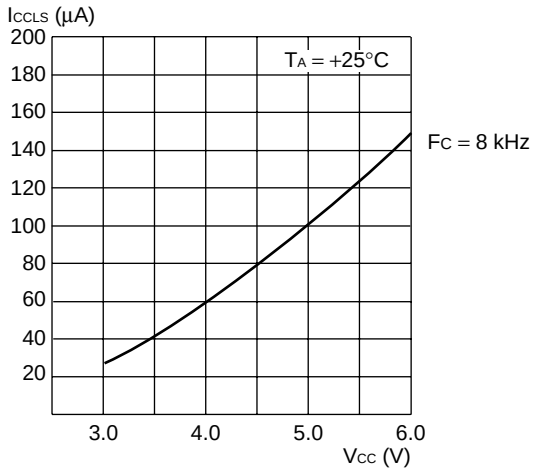

I_{CC} - F_C

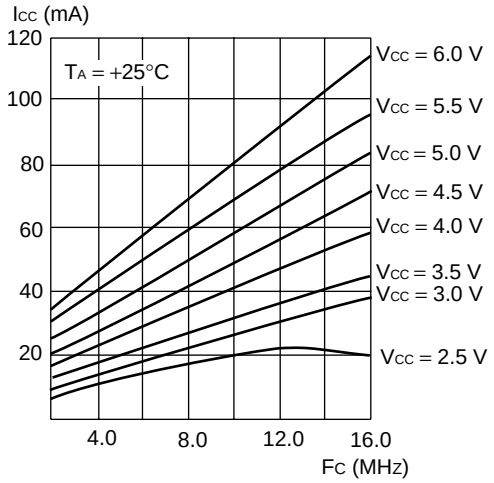

I_{CCS} - F_C

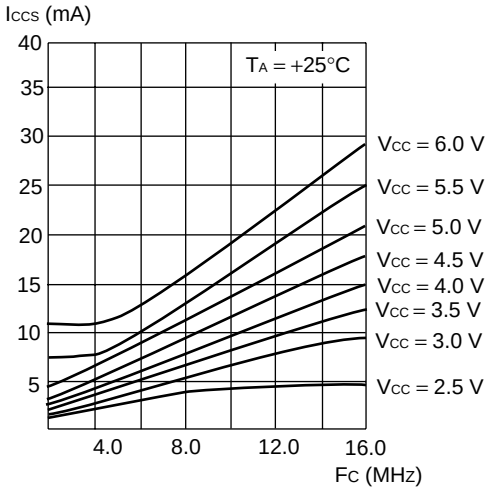

I_{CCT} - V_{CC}

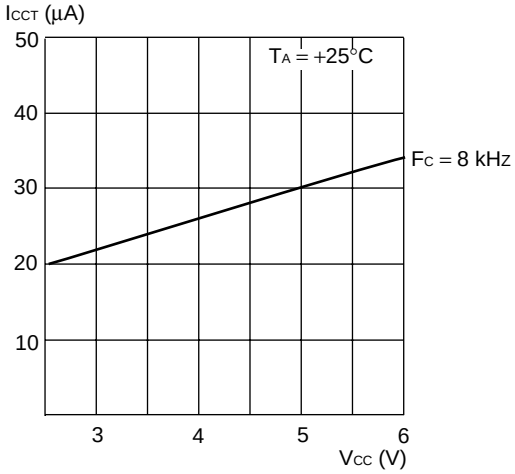

I_{CCH} -V_{CC}

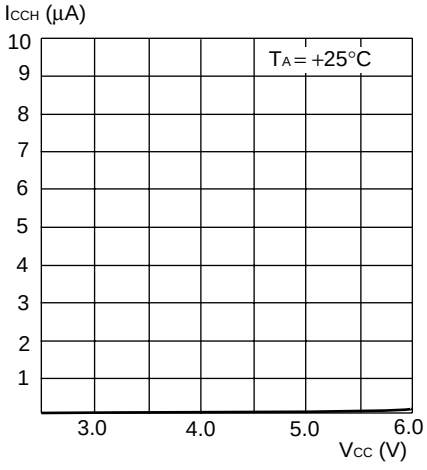

(Continued)

(Continued)

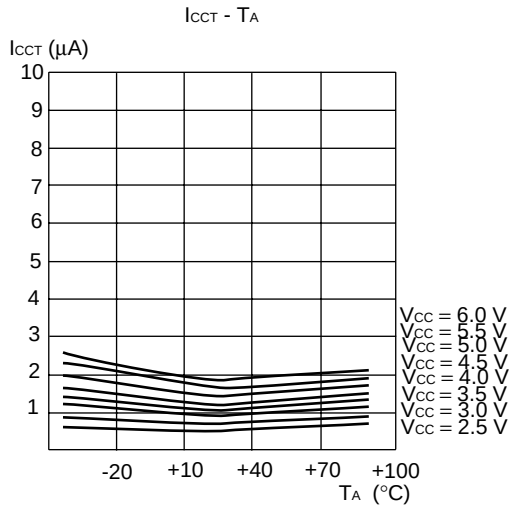
ICCT - TA
ICCT (µA)
10
9
8
7
6
5
4
3
2
1
VCC = 6.0 V
VCC = 5.5 V
VCC = 5.0 V
VCC = 4.5 V
VCC = 4.0 V
VCC = 3.5 V
VCC = 3.0 V
VCC = 2.5 V
-20
+10
+40
+70
+100
TA (°C)

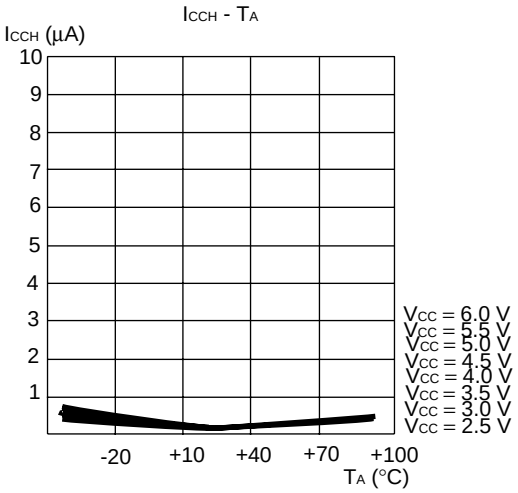
ICCH - TA
ICCH (µA)
10
9
8
7
6
5
4
3
2
1
VCC = 6.0 V
VCC = 5.5 V
VCC = 5.0 V
VCC = 4.5 V
VCC = 4.0 V
VCC = 3.5 V
VCC = 3.0 V
VCC = 2.5 V
-20
+10
+40
+70
+100
TA (°C)

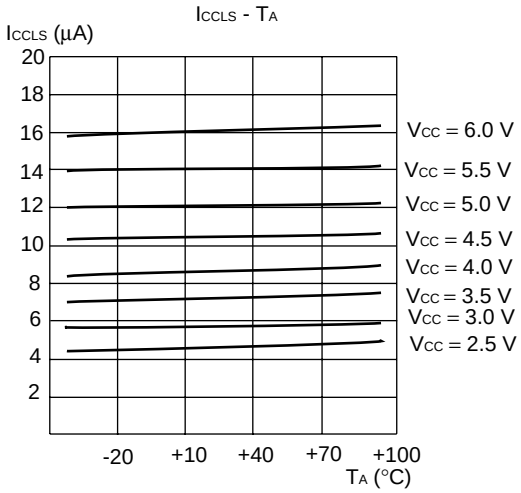
ICCLS - TA
ICCLS (µA)
20
18
16
14
12
10
8
6
4
2
VCC = 6.0 V
VCC = 5.5 V
VCC = 5.0 V
VCC = 4.5 V
VCC = 4.0 V
VCC = 3.5 V
VCC = 3.0 V
VCC = 2.5 V
-20
+10
+40
+70
+100
TA (°C)

(3) Power Supply Current (MB90574C)

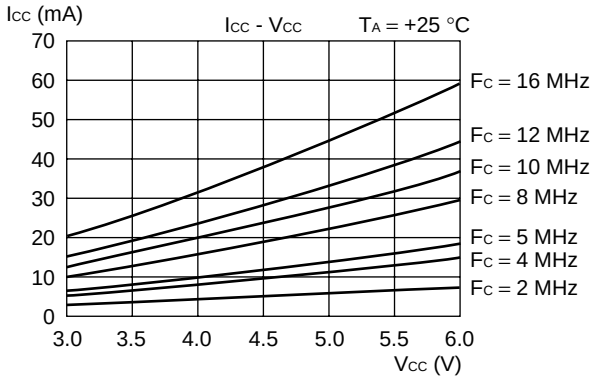

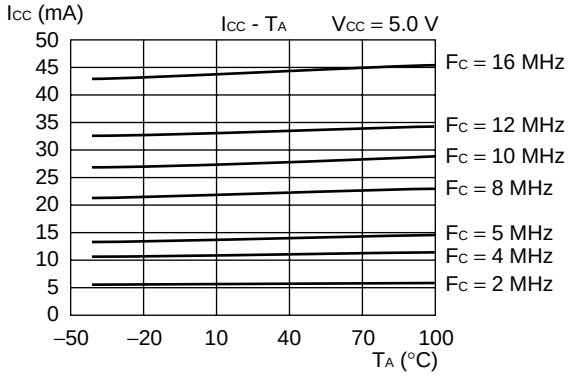

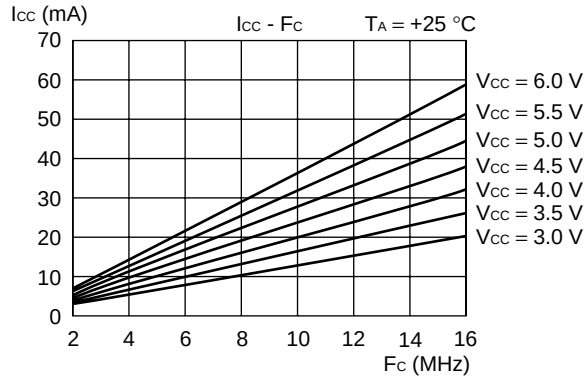

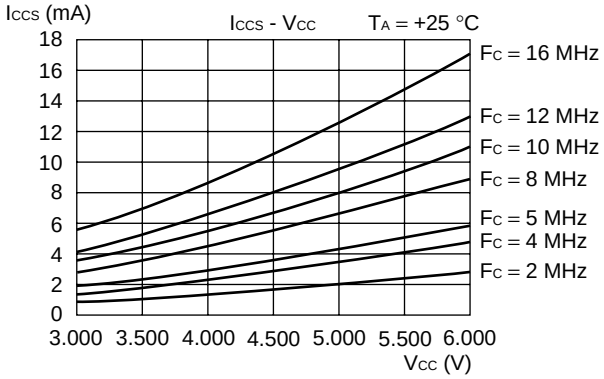

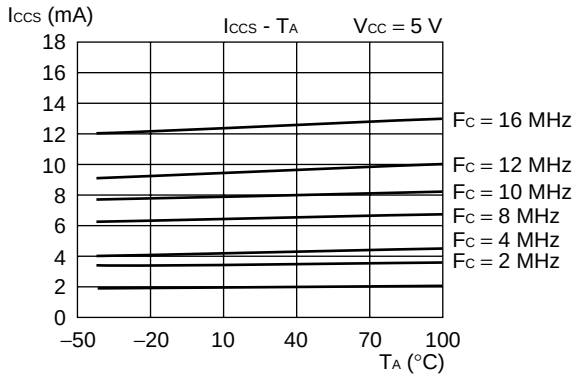

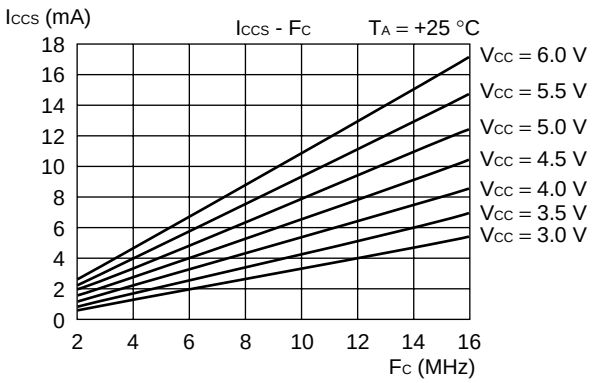

(Continued)

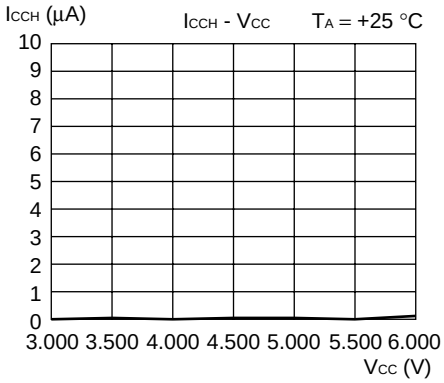
ICCH (µA)
ICCH - VCC
TA = +25 °C
10
9
8
7
6
5
4
3
2
1
0
3.000 3.500 4.000 4.500 5.000 5.500 6.000
VCC (V)

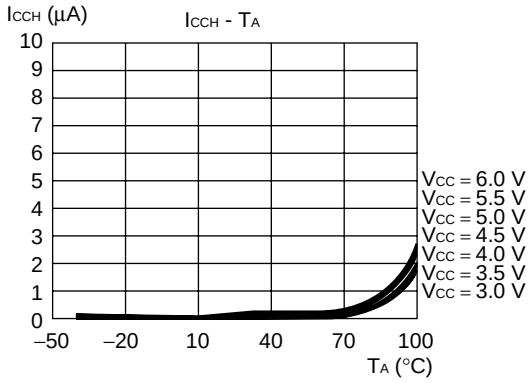
ICCH (µA)
ICCH - TA
10
9
8
7
6
5
4
3
2
1
0
VCC = 6.0 V
VCC = 5.5 V
VCC = 5.0 V
VCC = 4.5 V
VCC = 4.0 V
VCC = 3.5 V
VCC = 3.0 V
–50 –20 10 40 70 100
TA (°C)

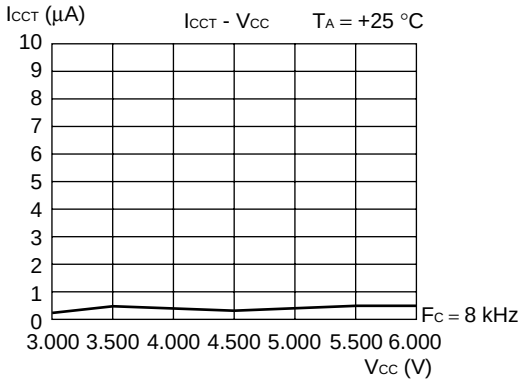
ICCT (µA)
ICCT - VCC
TA = +25 °C
10
9
8
7
6
5
4
3
2
1
0
FC = 8 kHz
3.000 3.500 4.000 4.500 5.000 5.500 6.000
VCC (V)

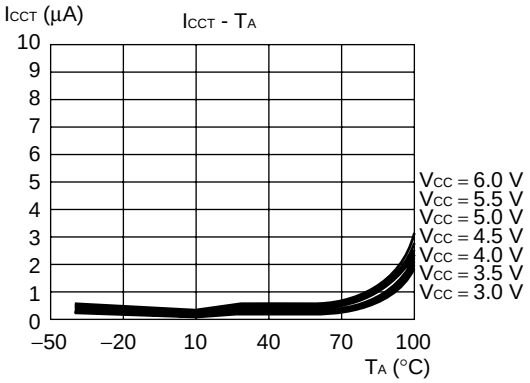
ICCT (µA)
ICCT - TA
10
9
8
7
6
5
4
3
2
1
0
VCC = 6.0 V
VCC = 5.5 V
VCC = 5.0 V
VCC = 4.5 V
VCC = 4.0 V
VCC = 3.5 V
VCC = 3.0 V
–50 –20 10 40 70 100
TA (°C)

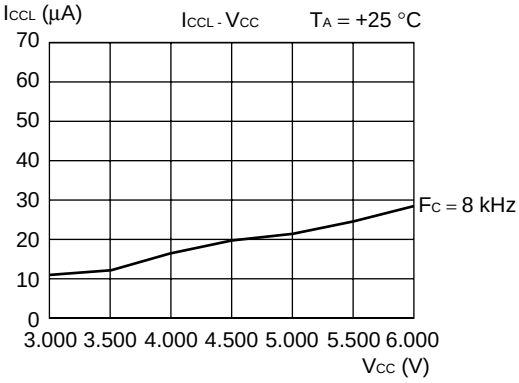
ICCL (µA)
ICCL - VCC
TA = +25 °C
70
60
50
40
30
20
10
0
FC = 8 kHz
3.000 3.500 4.000 4.500 5.000 5.500 6.000
VCC (V)

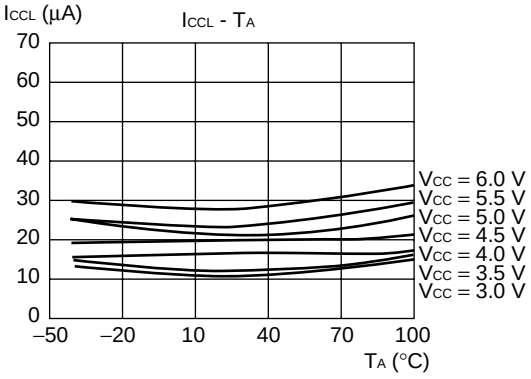
ICCL (µA)
ICCL - TA
70
60
50
40
30
20
10
0
VCC = 6.0 V
VCC = 5.5 V
VCC = 5.0 V
VCC = 4.5 V
VCC = 4.0 V
VCC = 3.5 V
VCC = 3.0 V
–50 –20 10 40 70 100
TA (°C)

(Continued)

(Continued)

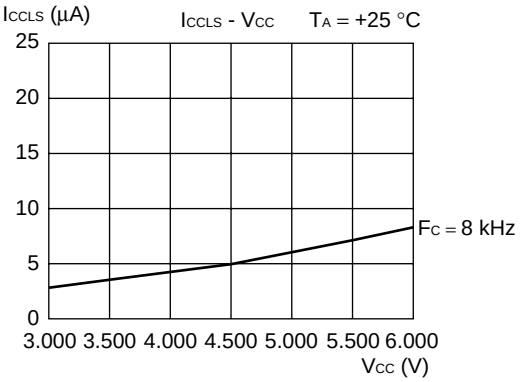
ICCLS (µA)
ICCLS - VCC
TA = +25 °C
25
20
15
10
5
0
3.000 3.500 4.000 4.500 5.000 5.500 6.000
VCC (V)
FC = 8 kHz

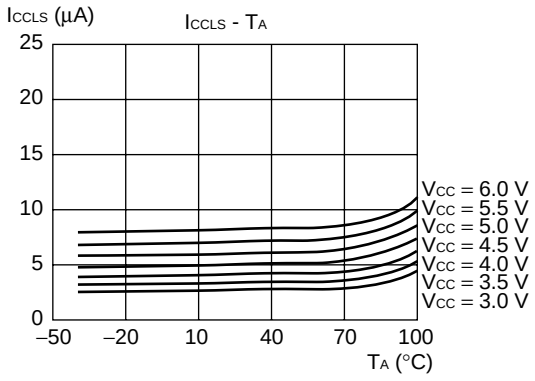
ICCLS (µA)
ICCLS - TA
25
20
15
10
5
0
–50 –20 10 40 70 100
TA (°C)
VCC = 6.0 V
VCC = 5.5 V
VCC = 5.0 V
VCC = 4.5 V
VCC = 4.0 V
VCC = 3.5 V
VCC = 3.0 V

■ ORDERING INFORMATION

Part number	Package	Remarks
MB90F574APMC1 MB90573PMC1	120-pin Plastic LQFP (FPT-120P-M24)	
MB90F574APFV MB90574CPFV MB90573PFV	120-pin Plastic QFP (FPT-120P-M13)	
MB90574CPMT MB90F574APMT	120-pin Plastic LQFP (FPT-120P-M21)	

■ PACKAGE DIMENSIONS

120-pin plastic LQFP		
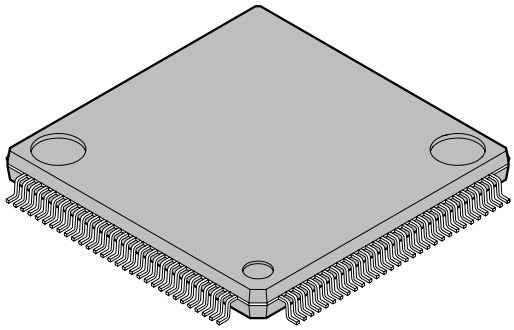	Lead pitch	0.40 mm
	Package width × package length	14.0 mm × 14.0 mm
	Lead shape	Gullwing
	Sealing method	Plastic mold
	Mounting height	1.70 mm MAX
	Code (Reference)	P-LFQFP120-14×14-0.40
(FPT-120P-M24)		

120-pin plastic LQFP
(FPT-120P-M24)

Note 1) * : These dimensions do not include resin protrusion.
Note 2) Pins width and pins thickness include plating thickness.
Note 3) Pins width do not include tie bar cutting remainder.

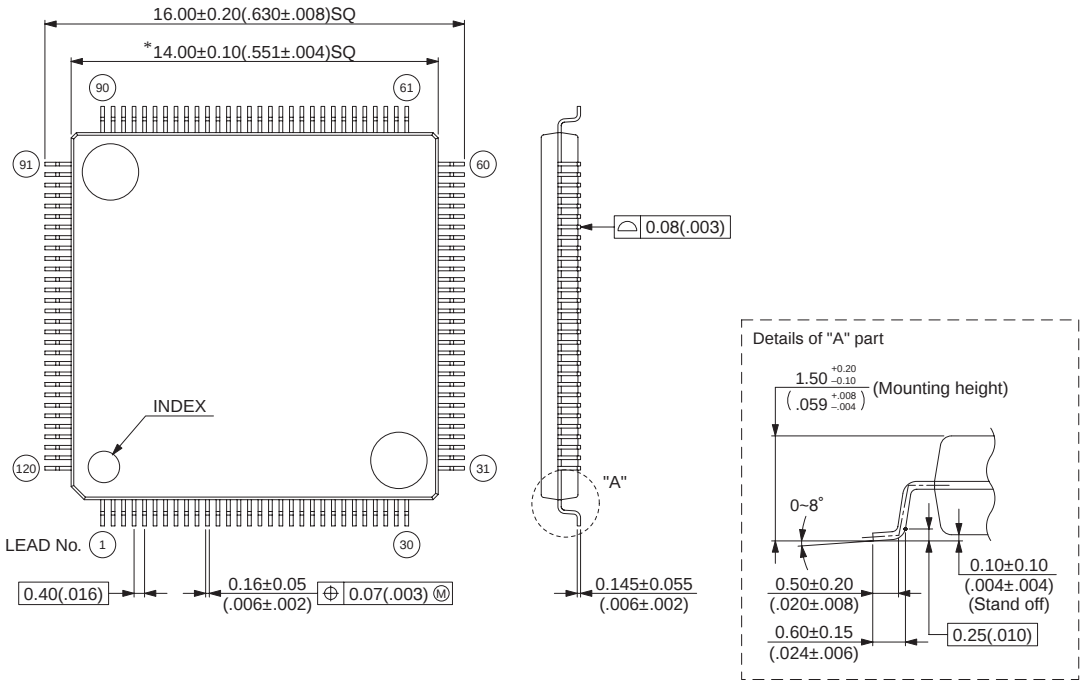

©2006-2008 FUJITSU MICROELECTRONICS LIMITED F120036S-c-1-2

Dimensions in mm (inches).
Note: The values in parentheses are reference values.

Please confirm the latest Package dimension by following URL.
http://edevice.fujitsu.com/package/en-search/

(Continued)

120-pin plastic QFP

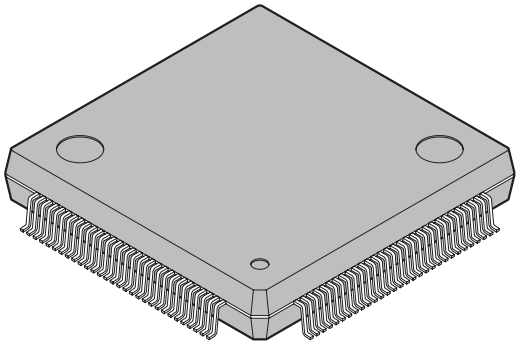

(FPT-120P-M13)

Lead pitch	0.50 mm
Package width × package length	20.0 × 20.0 mm
Lead shape	Gullwing
Sealing method	Plastic mold
Mounting height	3.85 mm MAX
Weight	2.58g
Code (Reference)	P-FQFP120-20×20-0.50

120-pin plastic QFP
(FPT-120P-M13)

Note 1) * : These dimensions do not include resin protrusion.
Note 2) Pins width and pins thickness include plating thickness.
Note 3) Pins width do not include tie bar cutting remainder.

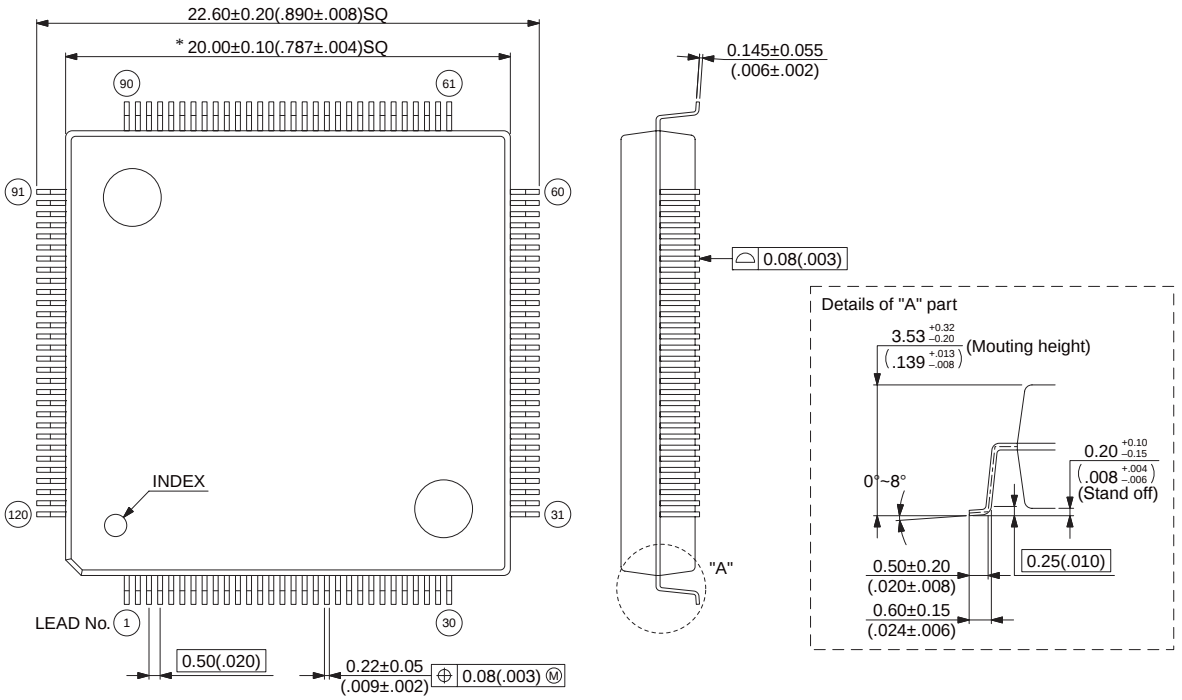

© 2003-2008 FUJITSU MICROELECTRONICS LIMITED F120013S-c-4-7

Dimensions in mm (inches).
Note: The values in parentheses are reference values.

Please confirm the latest Package dimension by following URL.
http://edevice.fujitsu.com/package/en-search/

(Continued)

(Continued)

120-pin plastic LQFP		
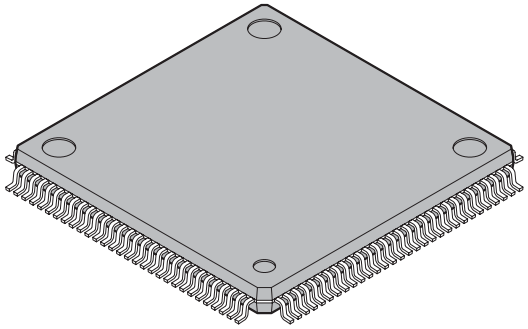	Lead pitch	0.50 mm
	Package width × package length	16.0 × 16.0 mm
	Lead shape	Gullwing
	Sealing method	Plastic mold
	Mounting height	1.70 mm MAX
	Weight	0.88 g
(FPT-120P-M21)	Code (Reference)	P-LFQFP120-16×16-0.50

120-pin plastic LQFP
(FPT-120P-M21)

Note 1) * : These dimensions do not include resin protrusion.
Resin protrusion is +0.25(.010) MAX(each side).
Note 2) Pins width and pins thickness include plating thickness.
Note 3) Pins width do not include tie bar cutting remainder.

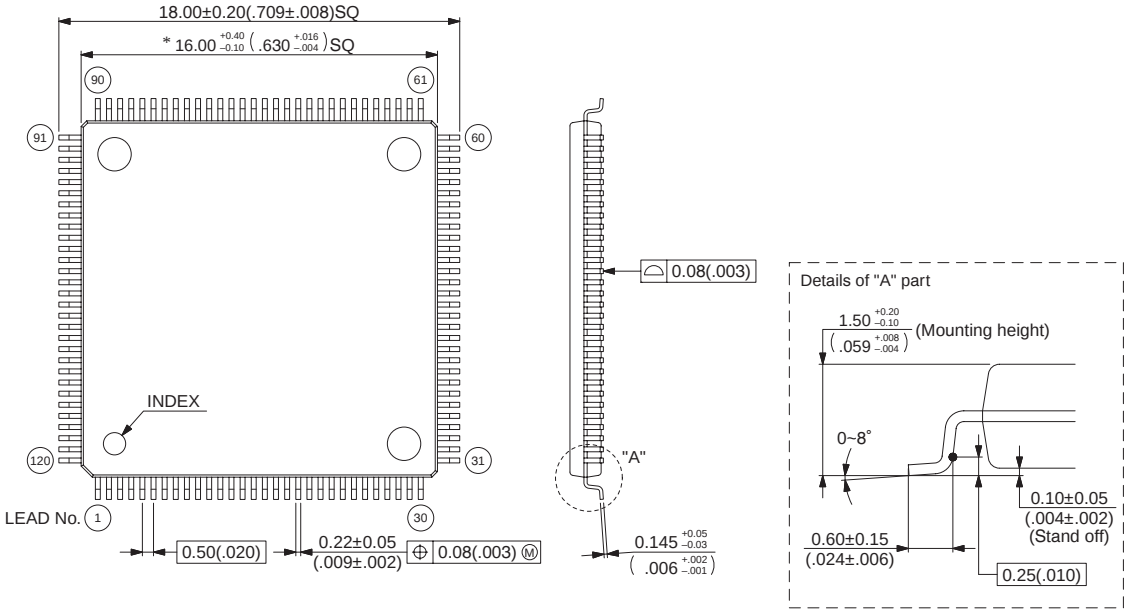

©2002-2008 FUJITSU MICROELECTRONICS LIMITED F120033S-c-4-5

Dimensions in mm (inches).
Note: The values in parentheses are reference values.

Please confirm the latest Package dimension by following URL.
http://edevice.fujitsu.com/package/en-search/

■ MAIN CHANGES IN THIS EDITION

Page	Section	Change Results
—	—	Series name is changed MB90570 series → MB90570A/570C series
—	—	Deleted the part number; MB90574, MB90F574, MB90V570
—	—	The package code is changed. (FPT-120P-M05 → FPT-120P-M24)
—	—	Peripheral Resource name is changed. Clock Timer → Watch Timer
38	■ PERIPHERALS 1. I/O port	Changed the pull-up resister value in "? Input pull-up resistor setup register (RDR)". 5.0 kΩ → 50 kΩ
83	■ ELECTRICAL CHARACTERISTICS 3. DC Characteristics	Changed the value of I_{CCS} (Condition : Internal operation at 16 MHz V_{CC} = 5.0 V In sleep mode) When MB90F574A (Min : 5, Max : 10 → Min : 25, Max : 30)
88	■ ELECTRICAL CHARACTERISTICS 4. AC Characteristics	Deleted the "(4) Recommended Resonator Manufacturers".
101	■ ELECTRICAL CHARACTERISTICS 5. Electrical Characteristics for the A/D Converter	Changed the value of "Zero transition voltage". (Added "AVRL") Changed the unit of "Zero transition voltage" and "Full-scale transition voltage". (mV → V)
115	■ ORDERING INFORMATION	Changed the part namber; MB90573PFF → MB90573PMC1 MB90F574APFF → MB90F574APMC1
116	■ PACKAGE DIMENSIONS	Changed the figure of package. FPT-120P-M05 → FPT-120P-M24

The vertical lines marked in the left side of the page show the changes.

FUJITSU MICROELECTRONICS LIMITED

Shinjuku Dai-Ichi Seimei Bldg., 7-1, Nishishinjuku 2-chome,
Shinjuku-ku, Tokyo 163-0722, Japan
Tel: +81-3-5322-3347 Fax: +81-3-5322-3387
http://jp.fujitsu.com/fml/en/

For further information please contact:

North and South America
FUJITSU MICROELECTRONICS AMERICA, INC.
1250 E. Arques Avenue, M/S 333
Sunnyvale, CA 94085-5401, U.S.A.
Tel: +1-408-737-5600 Fax: +1-408-737-5999
http://www.fma.fujitsu.com/

Europe
FUJITSU MICROELECTRONICS EUROPE GmbH
Pittlerstrasse 47, 63225 Langen, Germany
Tel: +49-6103-690-0 Fax: +49-6103-690-122
http://emea.fujitsu.com/microelectronics/

Korea
FUJITSU MICROELECTRONICS KOREA LTD.
206 Kosmo Tower Building, 1002 Daechi-Dong,
Gangnam-Gu, Seoul 135-280, Republic of Korea
Tel: +82-2-3484-7100 Fax: +82-2-3484-7111
http://kr.fujitsu.com/fmk/

Asia Pacific
FUJITSU MICROELECTRONICS ASIA PTE. LTD.
151 Lorong Chuan,
#05-08 New Tech Park 556741 Singapore
Tel : +65-6281-0770 Fax : +65-6281-0220
http://www.fmal.fujitsu.com/

FUJITSU MICROELECTRONICS SHANGHAI CO., LTD.
Rm. 3102, Bund Center, No.222 Yan An Road (E),
Shanghai 200002, China
Tel : +86-21-6146-3688 Fax : +86-21-6335-1605
http://cn.fujitsu.com/fmc/

FUJITSU MICROELECTRONICS PACIFIC ASIA LTD.
10/F., World Commerce Centre, 11 Canton Road,
Tsimshatsui, Kowloon, Hong Kong
Tel : +852-2377-0226 Fax : +852-2376-3269
http://cn.fujitsu.com/fmc/en/

Specifications are subject to change without notice. For further information please contact each office.

All Rights Reserved.
The contents of this document are subject to change without notice.
Customers are advised to consult with sales representatives before ordering.
The information, such as descriptions of function and application circuit examples, in this document are presented solely for the purpose of reference to show examples of operations and uses of FUJITSU MICROELECTRONICS device; FUJITSU MICROELECTRONICS does not warrant proper operation of the device with respect to use based on such information. When you develop equipment incorporating the device based on such information, you must assume any responsibility arising out of such use of the information.
FUJITSU MICROELECTRONICS assumes no liability for any damages whatsoever arising out of the use of the information.
Any information in this document, including descriptions of function and schematic diagrams, shall not be construed as license of the use or exercise of any intellectual property right, such as patent right or copyright, or any other right of FUJITSU MICROELECTRONICS or any third party or does FUJITSU MICROELECTRONICS warrant non-infringement of any third-party's intellectual property right or other right by using such information. FUJITSU MICROELECTRONICS assumes no liability for any infringement of the intellectual property rights or other rights of third parties which would result from the use of information contained herein.
The products described in this document are designed, developed and manufactured as contemplated for general use, including without limitation, ordinary industrial use, general office use, personal use, and household use, but are not designed, developed and manufactured as contemplated (1) for use accompanying fatal risks or dangers that, unless extremely high safety is secured, could have a serious effect to the public, and could lead directly to death, personal injury, severe physical damage or other loss (i.e., nuclear reaction control in nuclear facility, aircraft flight control, air traffic control, mass transport control, medical life support system, missile launch control in weapon system), or (2) for use requiring extremely high reliability (i.e., submersible repeater and artificial satellite).
Please note that FUJITSU MICROELECTRONICS will not be liable against you and/or any third party for any claims or damages arising in connection with above-mentioned uses of the products.
Any semiconductor devices have an inherent chance of failure. You must protect against injury, damage or loss from such failures by incorporating safety design measures into your facility and equipment such as redundancy, fire protection, and prevention of over-current levels and other abnormal operating conditions.
Exportation/release of any products described in this document may require necessary procedures in accordance with the regulations of the Foreign Exchange and Foreign Trade Control Law of Japan and/or US export control laws.
The company names and brand names herein are the trademarks or registered trademarks of their respective owners.

Edited: Business & Media Promotion Dept.