The Fujitsu 2G/3G/LTE Transceiver MB86L10A

Ideal for Multimode, Multiband LTE, UMTS and EDGE Mobile Handsets

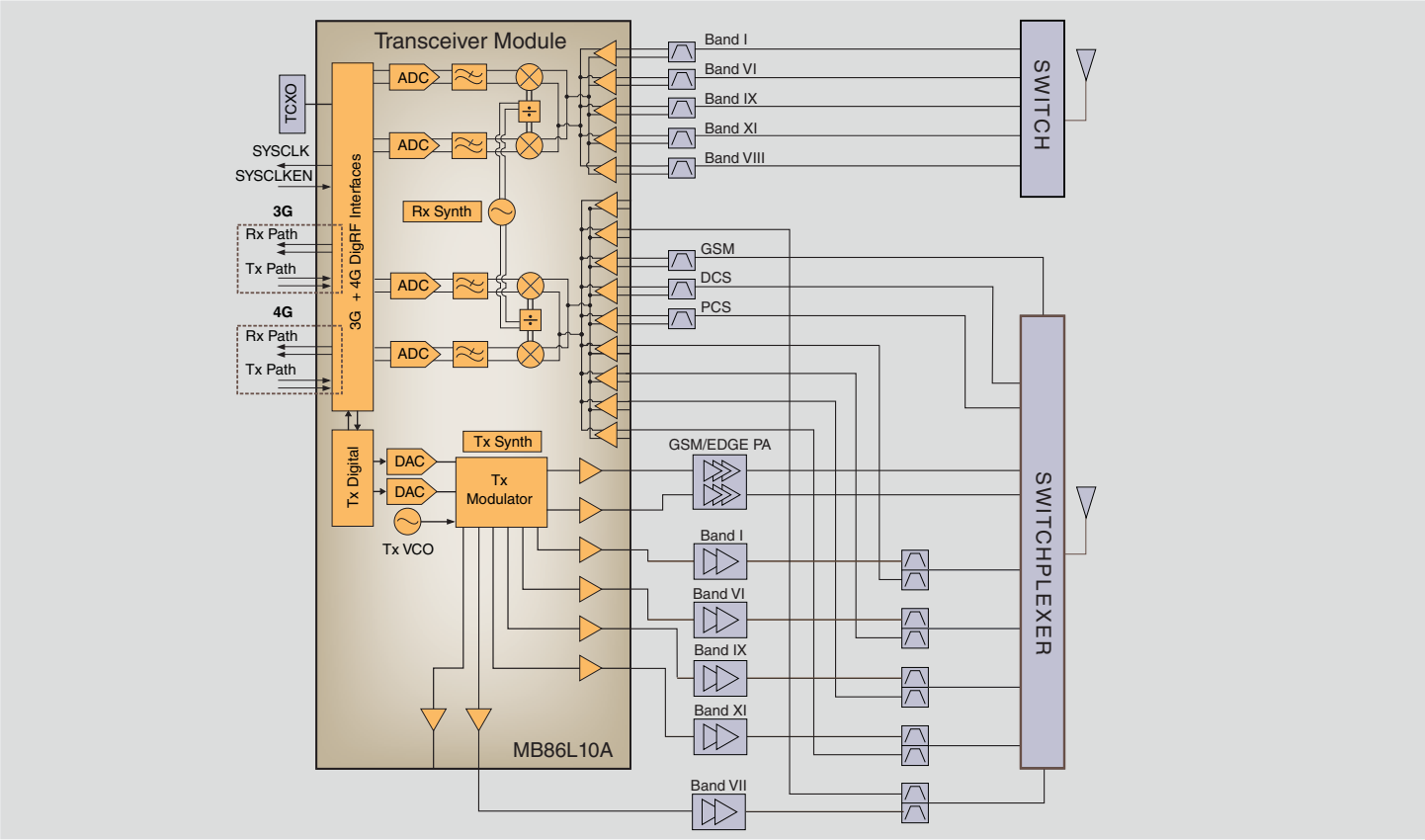

Description

The Fujitsu MB86L10A is the industry's first commercial multi-mode transceiver to eliminate external LNAs and inter-stage SAW filters from the TX and RX paths of both 3G and LTE lineups. The transceiver features a high-level programming model for controlling the radio using an open standard digital interface (3G and 4G DigRF/MIPI), which is compatible with a wide range of industry basebands.

Simultaneous support of both 3G and 4G interfaces allows the MB86L10A to be paired with one or two baseband processor ICs as needed.

Building on the revolutionary short-cycle RF programming method used in Fujitsu's MB86L01A, the MB86L10A speeds RF subsystem implementations with simplified layer-one programming and embedded intelligence. With this revolutionary approach, an engineer enters a single command stating the desired channel and power level. This command sets the parameters and times the events so that system compliance is virtually assured.

Eight outputs directly drive the power amplifier and eliminate the need for TX inter-stage SAW filters. The new RF front-end eliminates the need for LNAs and RX inter-stage SAW filters. Nine primary and five secondary inputs support LTE, WCDMA and GSM/EDGE. The receiver also incorporates anti-aliasing filters, digital channel filters, digital gain control and high-dynamic-range ADCs. The new, compact transceiver module enables cell-phone manufacturers to reduce component count, board space and bill of materials.

The transceiver offers SPI and/or GPOs to control PAs, switching regulators and the antenna switch. A microcontroller unit in the transceiver enables simplified timing and control.

The MB86L10A supports GSM (GSM850, EGSM900, DCS1800, PCS1900), WCDMA (bands I, II, III, IV, V, VI, VIII, IX, X, and XI), LTE (FDD bands 1, 3, 4, 6, 7, 8, 9, 10, 11, 13, 17 and TDD bands 38 or 40).

The Fujitsu 2G/3G/LTE Transceiver MB86L10A

Applications

- Mobile phones
- Mobile Internet devices
- Data cards
- Embedded modules

Features

- 6.5mm × 9.0mm × 1.0mm LGA package
- First multi-mode transceiver to eliminate both TX and RX inter-stage SAW filters, as well as LNAs from 3G and 4G paths
- GSM bands: GSM850, EGSM900, DCS1800, PCS1900
- Support for EGPRS Class 34 operation
- WCDMA bands: I, II, III, IV, V, VI, VIII, IX, X, and XI
- WCDMA FDD HSDPA category 10
- WCDMA FDD HSUPA with 4 E-DPDCH category 6
- LTE-FDD bands: 1, 3, 4, 6, 7, 8, 9, 10, 11, 13, and 17
- LTE-TDD bands: 38 or 40
- LTE category 3 data rate
- 14 differential RF inputs for the receiver
  - 9 differential RF inputs on the primary receiver
  - 5 differential RF inputs on the diversity receiver
- 8 RF outputs on transmitter
- DigRF 3G and 4G interfaces to the baseband IC
- RX and TX auto calibration routines
- Auxiliary SPI to control PAs, switching regulators and antenna switch
- GPO ports for non-SPI components
- Simplified timing and control via a microcontroller unit core
- Minimized factory calibration time

FUJITSU MICROELECTRONICS AMERICA, INC.
Corporate Headquarters
1250 E. Arques Avenue, M/S 333, Sunnyvale, CA 94085-5401
Tel: (800) 866-8608 Fax: (408) 737-5999
E-mail: inquiry@fma.fujitsu.com Web Site: http://us.fujitsu.com/micro

© 2010 Fujitsu Microelectronics America, Inc.
All company and product names are trademarks or registered trademarks of their respective owners.
Printed in the U.S.A. RFT-FS-21377-05/2010