FUJITSU SEMICONDUCTOR
DATA SHEET

DS04-28026-2E

ASSP Image Control

RGB Encoder

MB3516A

■ DESCRIPTION

The MB3516A is an RGB encoder containing an RGB signal matrix circuit, balanced modulator circuits, and a luminance signal/color-difference signal mixing circuit. This device inputs analog RGB and composite sync signals and outputs a composite video signal in the NTSC or PAL format. Also, it has Y/C separate output pins and RGB signal output pins.

■ FEATURES

- Supporting for both of the NTSC and PAL formats
- Containing Y/C separate output and RGB output pins as well as a composite video signal output pin
- On-chip 75 Ω driver (Composite video output, Y/C separate outputs, RGB outputs)
- Half H-killer circuit integrated
- Burst flag generator integrated
- PAL alternate circuit integrated
- Built-in filters
- Operation with a +5 volt single power supply
- Low power consumption: 280 mW (typical)

■ PACKAGE

24-pin plastic SOP

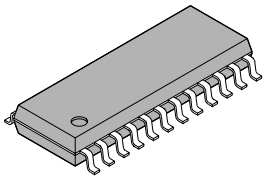

(FPT-24P-M01)

■ PIN ASSIGNMENT

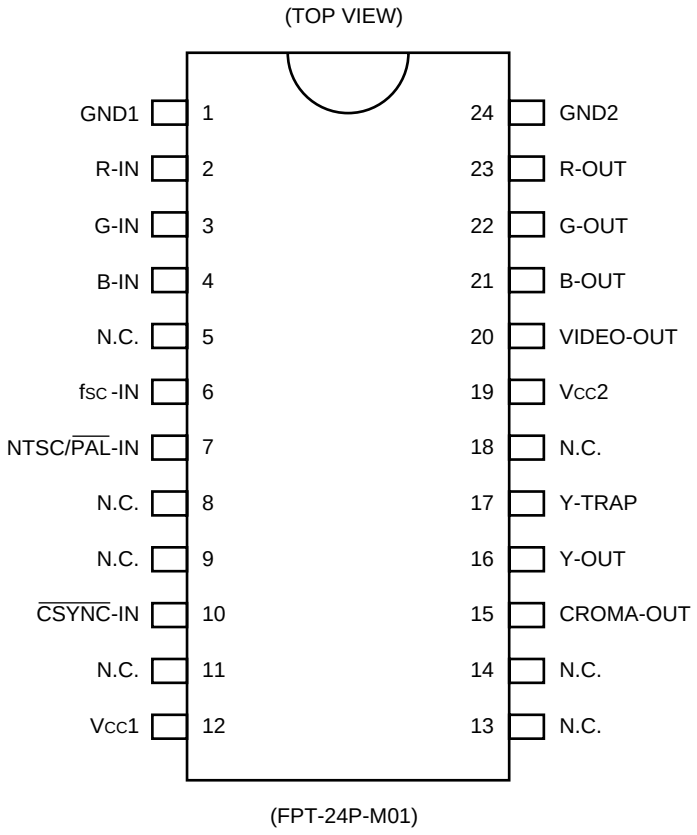

■ PIN DESCRIPTION

Pin No.	Symbol	I/O	Pin name	Function
1	GND 1	—	GND l pin	Ground pin for circuits other than 75 Ω output driver
2 3 4	R-IN G-IN B-IN	I	Analog RGB input pins	With $\overline{\text{CSYNC}}$-IN at the “L” level, the R-IN, G-IN, and B-IN pins are clamped. During the “L” level period, the R-IN, G-IN, and B-IN pins input pedestal levels. (100% = 1 Vp-p)
5	N.C.	—	Unused pin	—
6	fsc-IN	I	Subcarrier input pin	Inputs a sine wave of 1.0 to 5.0 Vp-p or a pulse carrier.
7	NTSC/$\overline{\text{PAL}}$-IN	I	NTSC/PAL selector pin	“H” level : Selects the NTSC mode. “L” level : Selects the PAL mode.
8	N.C.	—	Unused pin	—
9	N.C.	—	Unused pin	—
10	$\overline{\text{CSYNC}}$-IN	I	Composite sync signal input pin	$\overline{\text{CSYNC}}$-IN = “L” level : Outputs a composite sync signal while clamping R-IN, G-IN, and B-IN.
11	N.C.	—	Unused pin	—
12	$V_{CC}1$	—	Power-supply pin	Power-supply pin for circuits other than 75 Ω output driver.
13	N.C.	—	Unused pin	—
14	N.C.	—	Unused pin	—
15	CROMA-OUT	O	Chroma signal output pin	Capable of directly driving a 75 Ω load.
16	Y-OUT	O	Y-signal output pin	Capable of directly driving a 75 Ω load.
17	Y-TRAP	—	Luminance signal band control pin	Capable of adjusting the frequency characteristic of the luminance signal at the composite video signal output pin by connecting a capacitor or a capacitor and an inductor in series to GND1.
18	N.C.	—	Unused pin	—
19	$V_{CC}2$	—	Power-supply pin	Power-supply pin for the 75 Ω output driver circuit
20	VIDEO-OUT	O	Composite video signal output pin	Capable of directly driving a 75 Ω load.
21 22 23	B-OUT G-OUT R-OUT	O	Analog RGB signal output pins	Capable of directly driving a 75 Ω load.
24	GND2	—	GND2 pin	Ground pin for 75 Ω output driver circuit

■ BLOCK DIAGRAM

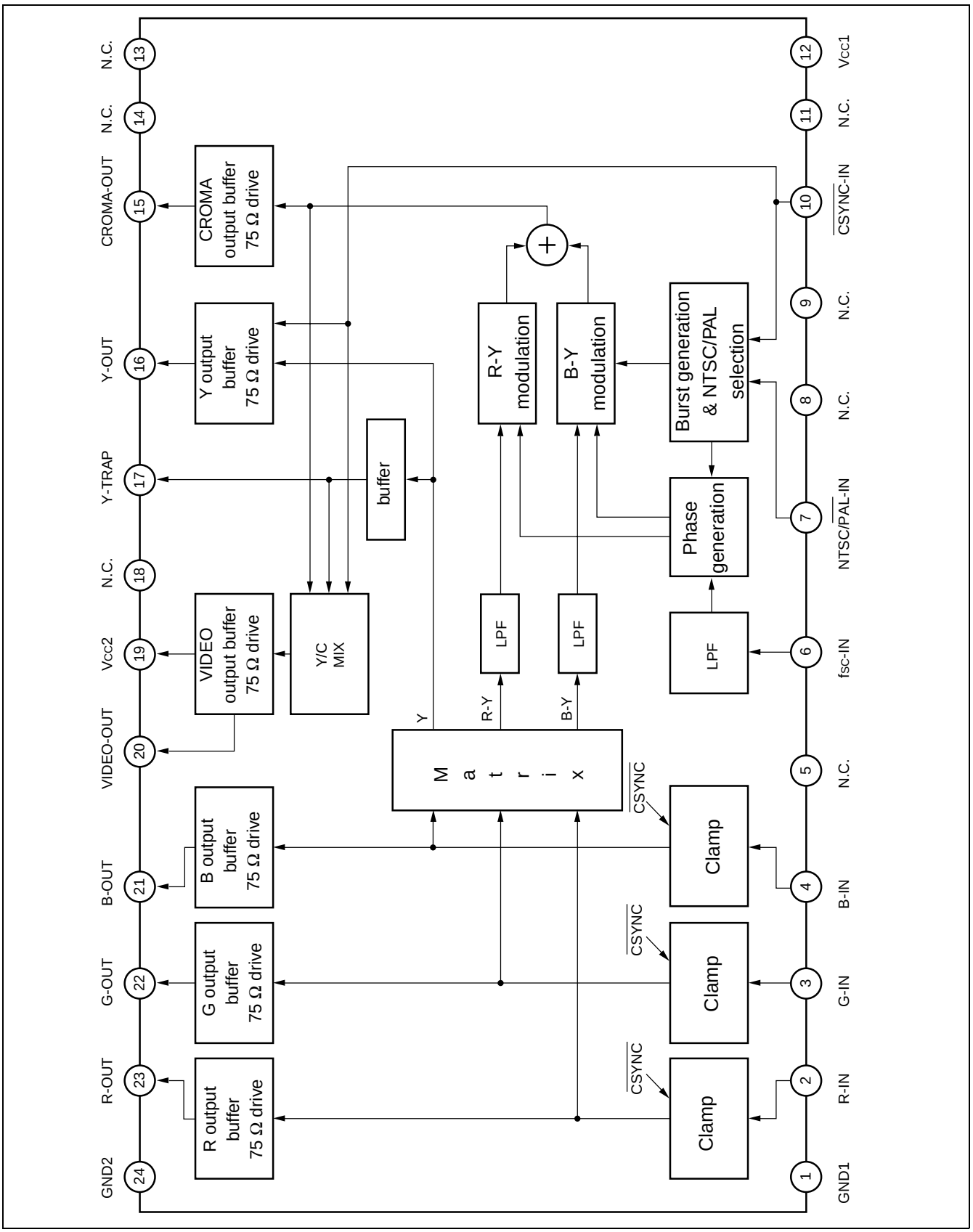

■ ABSOLUTE MAXIMUM RATINGS

Parameter	Symbol	Rating		Unit
		Min.	Max.	
Power supply voltage	V_{CC}	—	7	V
Digital signal input voltage	V_{ID}	0	V_{CC}	V
Subcarrier input voltage	Vfsc	0	V_{CC}	V
Storage temperature	Tstg	−55	+125	°C

WARNING: Semiconductor devices can be permanently damaged by application of stress (voltage, current, temperature, etc.) in excess of absolute maximum ratings. Do not exceed these ratings.

■ RECOMMENDED OPERATING CONDITIONS

Parameter	Symbol	Value			Unit
		Min.	Typ.	Max.	
Power supply voltage	V_{CC}	4.75	5.00	5.25	V
Subcarrier input voltage	Vfsc	1.0	—	5.0	V_{P-P}
RGB input voltage	$V_{R, G, B}$	0	—	1.0	V_{P-P}
Digital “L” level input voltage	V_{IL}	—	—	0.8	V
Digital “H” level input voltage	V_{IH}	2.0	—	—	V
Operating temperature	Ta	−20	—	+75	°C

WARNING: The recommended operating conditions are required in order to ensure the normal operation of the semiconductor device. All of the device’s electrical characteristics are warranted when the device is operated within these ranges.

Always use semiconductor devices within their recommended operating condition ranges. Operation outside these ranges may adversely affect reliability and could result in device failure.

No warranty is made with respect to uses, operating conditions, or combinations not represented on the data sheet. Users considering application outside the listed conditions are advised to contact their FUJITSU representatives beforehand.

■ ELECTRICAL CHARACTERISTICS

($V_{CC}1, 2 = 5$ V, Ta = 25°C)

Parameter	Symbol	Conditions	Value			Unit
			Min.	Typ.	Max.	
RGB output voltage	V_{O-R}	R-IN = 1 V_{P-P}	1.28	1.43	1.58	V_{P-P}
	V_{O-G}	G-IN = 1 V_{P-P}				
	V_{O-B}	B-IN = 1 V_{P-P}				
Sync signal level	$V_{OY\ (CS)}$	Y-OUT	0.48	0.57	0.66	V_{P-P}
Y-signal level at R 100%	$V_{OY\ (R)}$	Y-OUT	0.365	0.43	0.495	V
Y-signal level at G 100%	$V_{OY\ (G)}$	Y-OUT	0.714	0.84	0.966	V
Y-signal level at B 100%	$V_{OY\ (B)}$	Y-OUT	0.136	0.16	0.184	V
Y-signal level at White 100%	$V_{OY\ (W)}$	Y-OUT	1.21	1.43	1.65	V
Sync signal level	$V_{OV-Y\ (CS)}$	VIDEO-OUT	0.48	0.57	0.66	V_{P-P}
Y-signal level at R 100%	$V_{OV-Y\ (R)}$	VIDEO-OUT	0.365	0.43	0.495	V
Y-signal level at G 100%	$V_{OV-Y\ (G)}$	VIDEO-OUT	0.714	0.84	0.966	V
Y-signal level at B 100%	$V_{OV-Y\ (B)}$	VIDEO-OUT	0.136	0.16	0.184	V
Y-signal level at White 100%	$V_{OV-Y\ (W)}$	VIDEO-OUT	1.21	1.43	1.65	V
Burst level	$V_{OC\ (BT)}$	CROMA-OUT	0.45	0.57	0.69	V_{P-P}
	$V_{OV-C\ (BT)}$	VIDEO-OUT	0.45	0.57	0.69	V_{P-P}
R chroma ratio	R/BT	CROMA-OUT, VIDEO-OUT	2.84	3.16	3.48	—
R phase	θ_R	CROMA-OUT, VIDEO-OUT	94	104	114	deg
G chroma ratio	G/BT	CROMA-OUT, VIDEO-OUT	2.65	2.95	3.25	—
G phase	θ_G	CROMA-OUT, VIDEO-OUT	231	241	251	deg
B chroma ratio	B/BT	CROMA-OUT, VIDEO-OUT	2.01	2.24	2.47	—
B phase	θ_B	CROMA-OUT, VIDEO-OUT	337	347	357	deg
PAL burst level ratio	K (BT)	CROMA-OUT, VIDEO-OUT	0.9	1.0	1.1	—
PAL burst phase	θ_{PAL}	CROMA-OUT, VIDEO-OUT	125	135	145	deg
	$\theta_{/PAL}$	CROMA-OUT, VIDEO-OUT	215	225	235	deg
Burst count	N_{BT}	CROMA-OUT, VIDEO-OUT	8	10	12	Count
Burst position	t_{d-BT}	CROMA-OUT, VIDEO-OUT	0.4	0.5	0.7	µs
Carrier leak	V_L	CROMA-OUT, VIDEO-OUT	0	—	40	mV_{P-P}
Current consumption 1	$I_{CC}1$	—	—	40	58	mA
Current consumption 2	$I_{CC}2$	—	—	16	23	mA

■ VIDEO SIGNAL WAVEFORMS AND MAJOR MEASUREMENT ITEMS

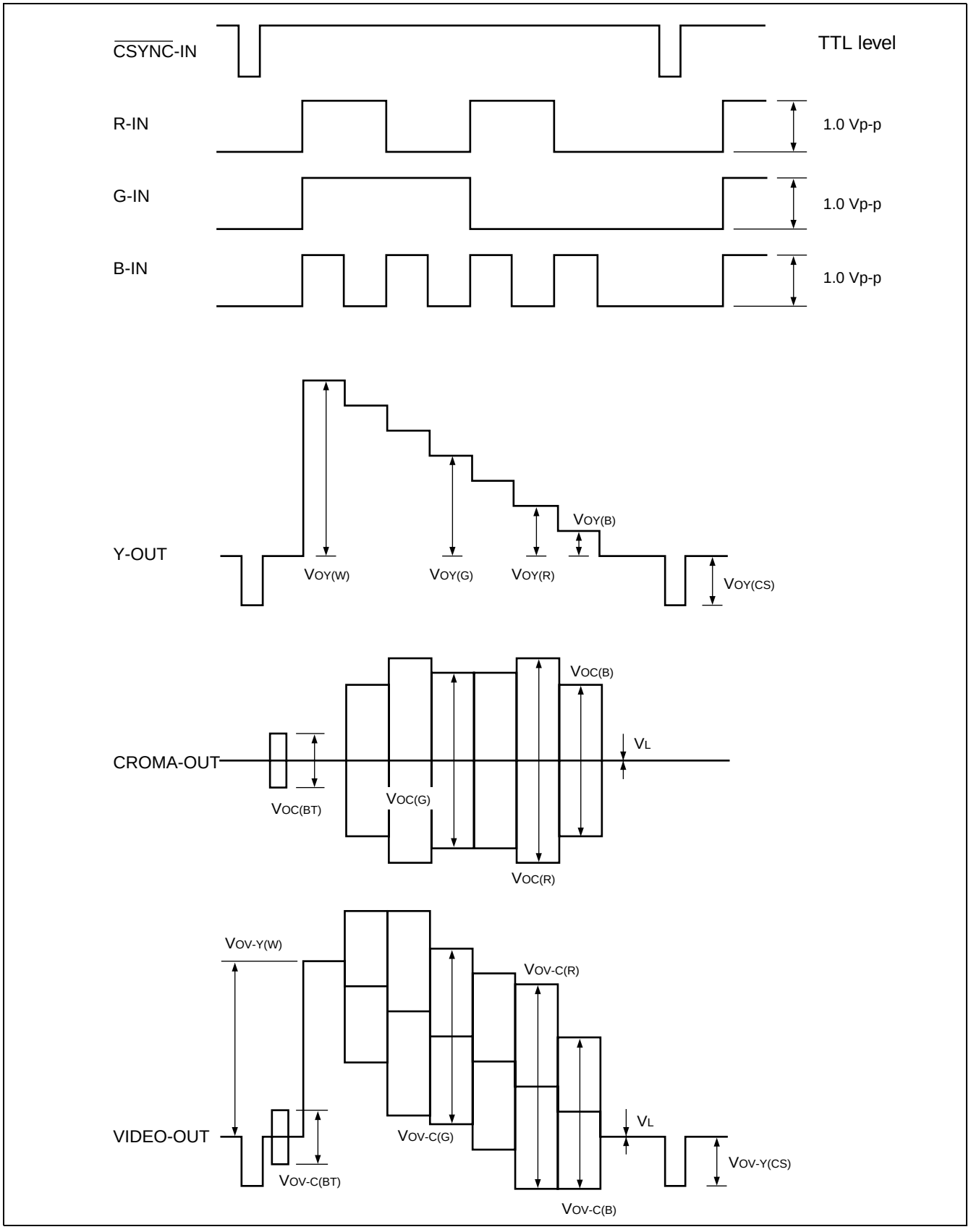

■ ELECTRICAL CHARACTERISTIC MEASUREMENT CIRCUIT DIAGRAM

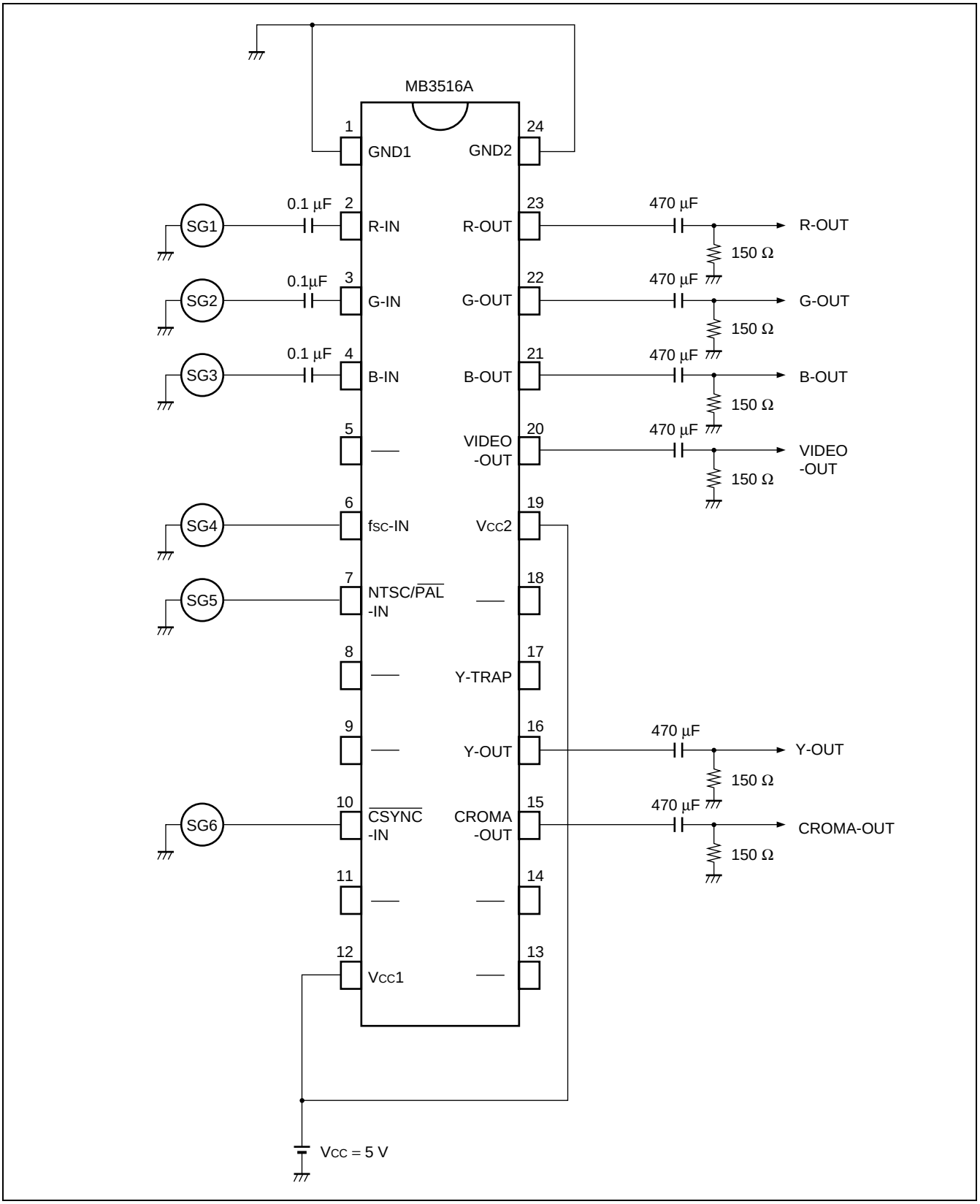

■ BURST SIGNAL

The MB3516A generates a burst signal at the timings shown below based on the composite sync signal.

- Horizontal synchronization

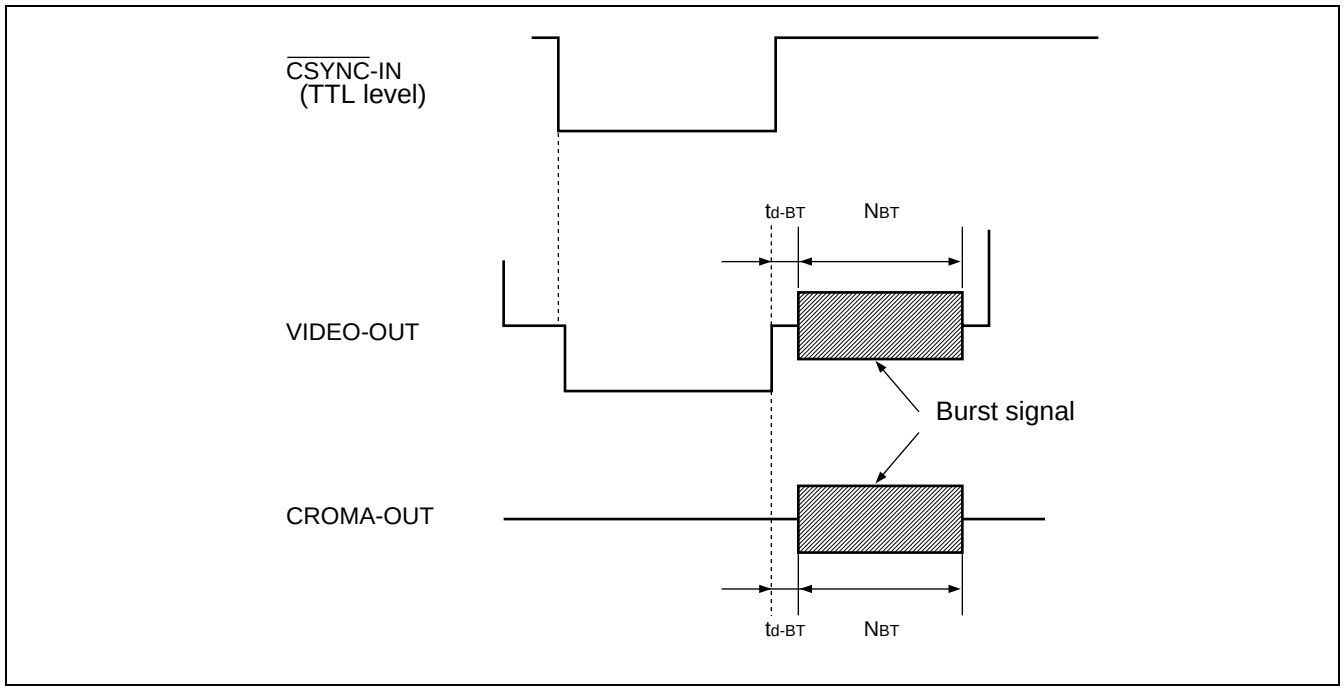

- Vertical synchronization

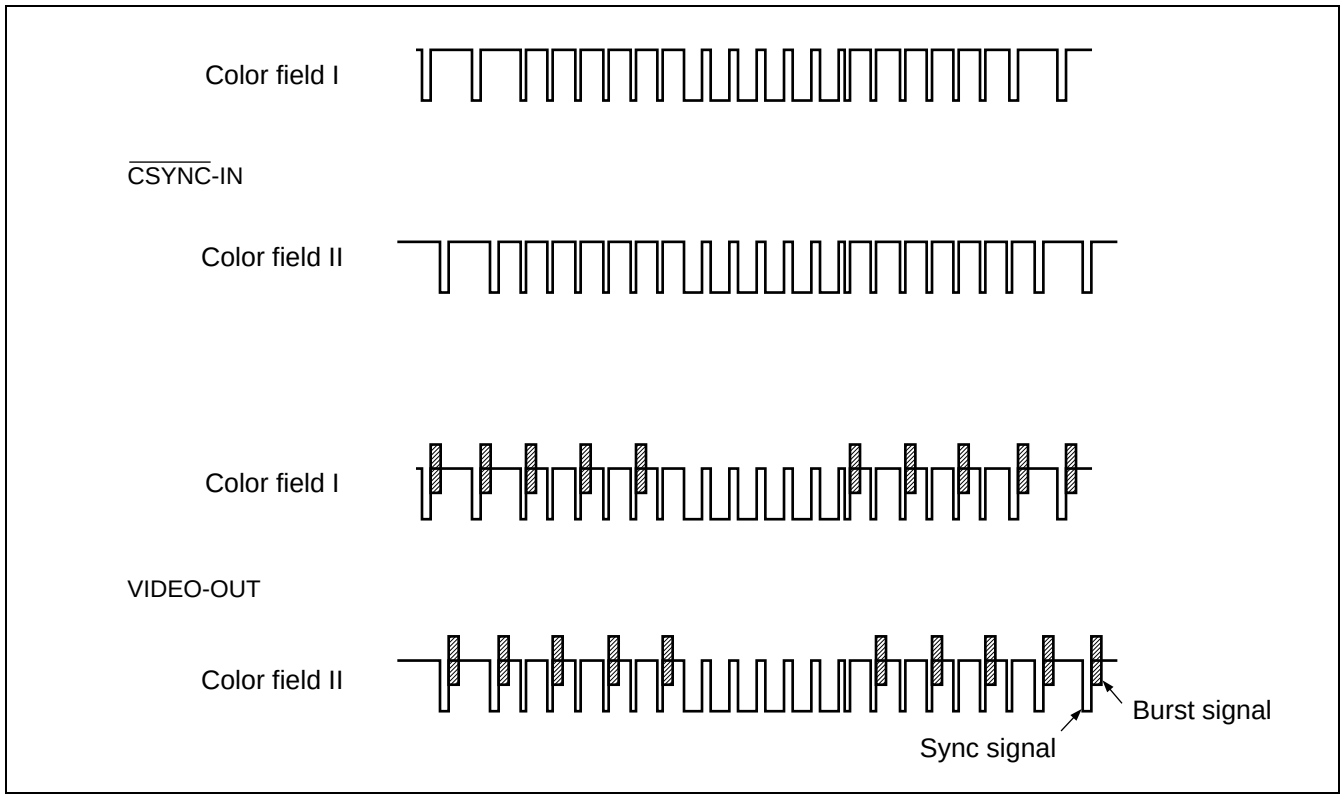

■ EQUIVALENT CIRCUIT DIAGRAMS

· R-IN, G-IN, B-IN

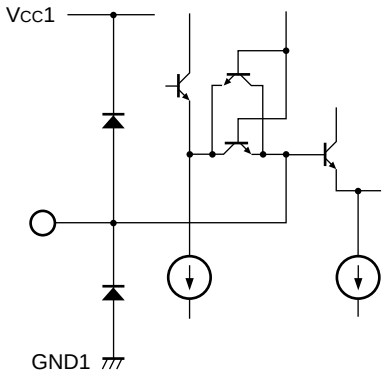

· f_{SC}-IN

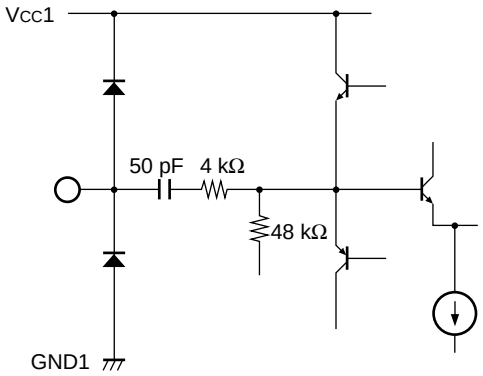

· NTSC/$\overline{\text{PAL}}$-IN, $\overline{\text{CSYNC}}$-IN

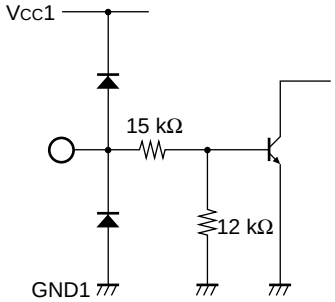

· Y-TRAP

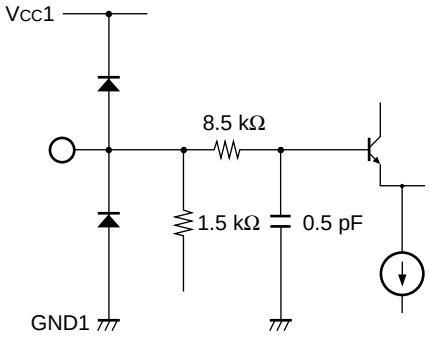

· CROMA-OUT, VIDEO-OUT,
Y-OUT, B-OUT, G-OUT, R-OUT

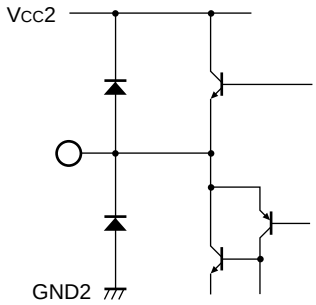

■ USAGE PRECAUTIONS

1. Analog RGB signal input

The analog RGB signal must be input with 1.0 Vp-p or lower at a sufficiently low impedance.

2. Subcarrier input

The subcarrier input to the MB3516A supports both of a sine wave from 1.0 to 5.0 Vp-p and a pulse.

3. Board pattern design

The noise limiting capacitors to be inserted to the Vcc1 and Vcc2 pins must be connected to the GND1 and GND2 pins as closely to the pins as possible.
The patterns to be connected to the GND1 and GND2 pins must be as wide as possible to reduce parasitic impedance.

■ ORDERING INFORMATION

Part number	Package	Remarks
MB3516APF	24-pin plastic SOP (FPT-24P-M01)	

■ PACKAGE DIMENSION

24-pin plastic SOP
(FPT-24P-M01)

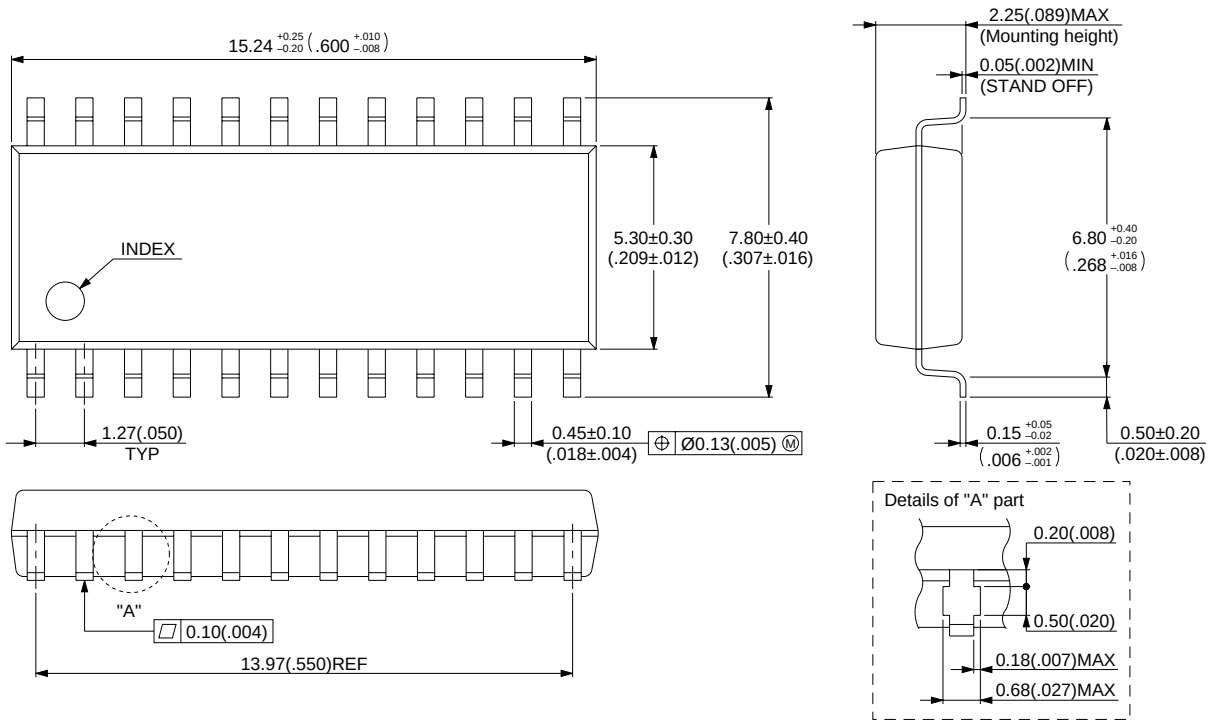

Dimensions in mm (inches)

© 1994 FUJITSU LIMITED F24007S-3C-4

FUJITSU LIMITED

For further information please contact:

Japan
FUJITSU LIMITED
Corporate Global Business Support Division
Electronic Devices
KAWASAKI PLANT, 4-1-1, Kamikodanaka,
Nakahara-ku, Kawasaki-shi,
Kanagawa 211-8588, Japan
Tel: +81-44-754-3763
Fax: +81-44-754-3329

http://www.fujitsu.co.jp/

North and South America
FUJITSU MICROELECTRONICS, INC.
3545 North First Street,
San Jose, CA 95134-1804, USA
Tel: +1-408-922-9000
Fax: +1-408-922-9179

Customer Response Center
Mon. - Fri.: 7 am - 5 pm (PST)
Tel: +1-800-866-8608
Fax: +1-408-922-9179

http://www.fujitsumicro.com/

Europe
FUJITSU MICROELECTRONICS EUROPE GmbH
Am Siebenstein 6-10,
D-63303 Dreieich-Buchschlag,
Germany
Tel: +49-6103-690-0
Fax: +49-6103-690-122

http://www.fujitsu-fme.com/

Asia Pacific
FUJITSU MICROELECTRONICS ASIA PTE LTD
#05-08, 151 Lorong Chuan,
New Tech Park,
Singapore 556741
Tel: +65-281-0770
Fax: +65-281-0220

http://www.fmap.com.sg/

F0003
© FUJITSU LIMITED Printed in Japan

All Rights Reserved.

The contents of this document are subject to change without notice.
Customers are advised to consult with FUJITSU sales representatives before ordering.

The information and circuit diagrams in this document are presented as examples of semiconductor device applications, and are not intended to be incorporated in devices for actual use. Also, FUJITSU is unable to assume responsibility for infringement of any patent rights or other rights of third parties arising from the use of this information or circuit diagrams.

The contents of this document may not be reproduced or copied without the permission of FUJITSU LIMITED.

FUJITSU semiconductor devices are intended for use in standard applications (computers, office automation and other office equipments, industrial, communications, and measurement equipments, personal or household devices, etc.).
CAUTION:
Customers considering the use of our products in special applications where failure or abnormal operation may directly affect human lives or cause physical injury or property damage, or where extremely high levels of reliability are demanded (such as aerospace systems, atomic energy controls, sea floor repeaters, vehicle operating controls, medical devices for life support, etc.) are requested to consult with FUJITSU sales representatives before such use. The company will not be responsible for damages arising from such use without prior approval.

Any semiconductor devices have inherently a certain rate of failure. You must protect against injury, damage or loss from such failures by incorporating safety design measures into your facility and equipment such as redundancy, fire protection, and prevention of over-current levels and other abnormal operating conditions.

If any products described in this document represent goods or technologies subject to certain restrictions on export under the Foreign Exchange and Foreign Trade Control Law of Japan, the prior authorization by Japanese government should be required for export of those products from Japan.