Rev 2; 7/05

MAXQ2000 Evaluation Kit

Evaluates: MAXQ2000

General Description

The MAXQ2000 evaluation kit (EV kit) is a proven platform to conveniently evaluate the capabilities of the MAXQ2000 low-power LCD microcontroller. The kit contains the MAXQ2000 with pins brought out to headers, a JTAG programming interface, fixed and adjustable power supplies, a DB-9 serial connector, an LCD display, and switches and LEDs to control and display board operation. With the included software, serial-to-JTAG interface board, and an RS-232 cable connected to a personal computer, the kit provides a completely functional system ideal for evaluating the capabilities of the MAXQ2000.

Evaluation Kit Contents

- **MAXQ2000 Evaluation Kit Board with Processor and 13.5MHz Crystal Installed**
- **Serial-to-JTAG Interface Board and JTAG Cable**
- **MAXQ2000 LCD Display Daughterboard**
- **MAXQ2000 Evaluation Kit CD-ROM**

Ordering Information

PART	DESCRIPTION
MAXQ2000-KIT	MAXQ2000 EV Kit Board

MAXQ is a registered trademark of Maxim Integrated Products, Inc.
1-Wire is a registered trademark of Dallas Semiconductor Corp.
SPI is a trademark of Motorola, Inc.

Features

- **Easily Loads Code Using Bootstrap Loader and Serial-to-JTAG Interface Board**
- **JTAG Interface Provides In-Application Debugging Features**
  - **Step-by-Step Execution Tracing**
  - **Breakpointing by Code Address, Data Memory Address, or Register Access**
  - **Data Memory View and Edit**
- **Removable, Static, 4-1/2 Digit LCD Display**
- **DB-9 RS-232 Serial Connector and Level Translator**
- **On-Board 3.6V, 2.5V and Adjustable 1.8V to 3.6V Power-Supply Regulators**
- **Evaluation Kit Board can be Powered Directly over JTAG Interface**
- **Processor Clock can be run from Crystal or Programmable Oscillator**
- **Serial EEPROM**
- **DS2433 1-Wire® EEPROM Demonstrates Use of 1-Wire Interface**
- **MAX1407 ADC/DAC Demonstrates Use of SPI™ Interface**
- **Optional LED Display of Port 0 Logic Levels**
- **Pushbutton Switches for Reset and Interrupt Generation**
- **32kHz Crystal for Real-Time Clock Oscillator Use**
- **Prototyping Area Including V_{DDIO} and V_{DD} Voltage Rails**
- **Test/Expansion Header Includes All Device GPIO and LCD Pins**
- **Configuration DIP Switches Connect/Disconnect All Demonstration Circuitry from Port Pins**
- **Board Schematics Provide a Convenient Reference Design**

For pricing, delivery, and ordering information, please contact Maxim Direct at 1-888-629-4642, or visit Maxim's website at www.maxim-ic.com.

MAXQ2000 Evaluation Kit

Component List—Evaluation Kit Board

DESIGNATION	QTY	DESCRIPTION	SUPPLIER	PART
C1, C3, C4, C19	4	10µF, 10V tantalum capacitors	Panasonic	ECS-T1AX106R
C2, C5, C6	3	10µF, 16V capacitors (1210)	Panasonic	ECJ3YF1C106Z
C7, C8, C11–C16, C20–C24	13	100nF 10%, 10V capacitors (0805)	Generic	—
C9, C10	2	10pF 5%, 50V capacitors (0805)	Panasonic	ECJ2VC1H100D
C17	1	18nF 10%, 10V capacitor (0805)	Generic	—
C18	1	4.7µF 10%, 10V capacitor (0805)	Generic	—
JU1, JU2, JU3	3	1 x 3, 0.1” spaced jumpers	3M	929834-02-03
JU4–JU11	8	1 x 2, 0.1” spaced jumpers	3M	929834-02-02
J1	1	Male 2mm power connector	CUI Inc.	PJ-002A
J2	1	2 x 36, 0.1” spaced header	3M	929836-02-36
J3	1	2 x 26, 0.1” spaced header	3M	929836-02-26
J4	1	2 x 5, 0.1” spaced header	3M	929836-02-05
J5	1	Female RS-232 DB9 connector	Amp/Tyco	745781-4
J6	1	DS9094F surface-mount iButton® clip	Dallas Semiconductor	DS9094FS
J7	1	1 x 8, 0.1” spaced header	3M	929834-02-08
RN1	1	1kΩ SIP-9 resistor pack	CTS	770-10-1-102
R1, R4, R5	3	25.5kΩ 1%, 1/8W resistors (0805)	Generic	—
R2	1	50kΩ potentiometer resistor	Panasonic	EVN-D2AA03B54
R3, R6	2	13.0kΩ 1%, 1/8 W resistors (0805)	Generic	—
R7	1	23.7kΩ 1%, 1/8 W resistor (0805)	Generic	—
R8	1	10kΩ potentiometer resistor	Panasonic	EVN-D2AA03B14
R9–R13	5	1kΩ, 1/8W resistors (0805)	Generic	—
R14–R20	7	10kΩ, 1/8 W resistors (0805)	Generic	—
R21	1	Empty resistor footprint (0805)	—	—
SW1, SW3, SW6	3	DIP switches x 8	C & K	SDA08H1KD
SW2, SW4, SW5	3	SPST N/O pushbutton	Omron	B3FS-1000
TP1—TP4	4	1 x 2, 0.100” spaced test points	3M	929834-02-02
U1, U2, U3	3	MAX1658 350mA linear regulator	Maxim	MAX1658ESA
U4	1	MAXQ2000 low-power LCD micro	Maxim	MAXQ2000-RAX
U5	1	DS1077L 3V EconOscillator™	Dallas Semiconductor	DS1077LZ-40
U6	1	MAX3387E 3V RS-232 transceiver	Maxim	MAX3387ExUG
U7	1	DS2433 4kB 1-Wire EEPROM	Dallas Semiconductor	DS2433S
U8	1	MAX1407 16-bit multi-ADC/DAC	Maxim	MAX1407CAI
U9	1	AT24C32A 1.8V I^2C EEPROM	Atmel	AT24C32AN-10SI-1.8
U10	1	74VHC541 octal buffer	Fairchild	74VHC541MTC
U11	1	10-segment bar graph red LED	Fairchild	MV57164
Y1	1	13.5MHz, 18pF crystal	Citizen	HC49US13.500MABJ
Y2, Y3	2	32kHz, 6pF crystals	Epson	C-002RX32.768K-E

iButton is a registered trademark of Dallas Semiconductor Corp.
EconOscillator is a trademark of Dallas Semiconductor Corp.

Component List—LCD Display Daughterboard

DESIGNATION	QTY	DESCRIPTION	SUPPLIER	PART
C1–C4	4	Empty capacitor footprint (0805)	—	—
J1	1	2 x 26, 0.1" spaced socket	3M	929975-01-26
R1–R3	3	Empty resistor footprint (0805)	—	—
U1	1	Static, 3V, 4-1/2 digit display LCD	Varitronix	VI-502-DP-RC-S

Detailed Description

This evaluation kit must be used with the following documents:

- MAXQ2000 Data Sheet (**www.maxim-ic.com/MAXQ2000**)
- MAXQ Family User's Guide (**www.maxim-ic.com/MAXQUG**)
- MAXQ Family User's Guide: MAXQ2000 Supplement (**www.maxim-ic.com/MAXQ2k_sup**)

The MAXQ2000 EV kit board and LCD display daughterboard are fully defined in the schematics provided in this document. However, a short description of the major components and connectors of the boards follows.

Power Supplies

There are three different ways to set up power supplies when using the MAXQ2000 EV kit. The two boards that require power supplies are the MAXQ2000 EV kit board and the serial-to-JTAG interface board. The LCD daughterboard simply plugs into the MAXQ2000 EV kit board and does not require its own power supply.

Two different types of power supplies (which are not included with the MAXQ2000 EV kit) are required to set up the configurations listed below.

- 5V, ±5% 300mA DC regulated supply (25mm, center-post, positive female connector) to power the serial-to-JTAG interface board.
- 6V to 9V, 300mA DC supply (2.5mm, center-post, positive female connector) to power the MAXQ2000 EV kit board.

Running Both Boards from Separate Power Supplies

To run each of the boards from its own power supply, connect supplies as follows.

- Connect a 5V, ±5% regulated DC wall supply to the J2 power plug of the serial-to-JTAG interface board.
- Connect a 6V to 9V DC wall supply (center post positive, at least 300mA capacity) to the J1 power plug of the MAXQ2000 EV kit board.

Note: When using two power supplies in this manner, the JU11 jumper on the MAXQ2000 EV kit board must be DISCONNECTED.

Running Both Boards from a Single Power Supply

If the serial-to-JTAG interface board is being used, a single power supply can be used to power both boards as follows.

- Connect a 5V, ±5% regulated DC wall supply to the J2 power plug of the serial-to-JTAG interface board.
- Connect the JH3 jumper on the serial-to-JTAG interface board.
- Connect the JU11 jumper on the MAXQ2000 EV kit board.

Note: Do not connect a power supply to the J1 plug on the MAXQ2000 EV kit when powering the boards in this manner.

Running the MAXQ2000 EV KIT Board from a Single Power Supply

If the MAXQ2000 has already been programmed using the JTAG interface, it is possible to disconnect the serial-to-JTAG board and power up the MAXQ2000 Evaluation Kit board on its own. This simply executes the previously loaded firmware, with no possibility of in-application load or debugging.

- Connect a 6V to 9V DC wall supply (center post positive, at least 300mA capacity) to the J1 power plug of the MAXQ2000 EV kit board.

MAXQ2000 Evaluation Kit

Internal Power Rails

The MAXQ2000 EV kit board generates three internal power rails from the DC input power supply (from J1 or the serial-to-JTAG board). Each of these supplies may be used to support up to 100mA of additional circuitry in the prototyping area. (Note: Test point TP1 is board ground.)

- The **adjustable** power supply, which can be measured at test point TP2, provides an adjustable voltage between +1.8V and +3.6V. The level of this supply can be adjusted manually by turning potentiometer R2 with a screwdriver.
- The **3.6V fixed** power supply can be measured at test point TP3. This voltage level can be used for V_{DDIO} or V_{LCD}, but not V_{DD}.
- The **2.5V fixed** power supply can be measured at test point TP4. This voltage level can be used for V_{DDIO}, V_{LCD}, or V_{DD}.

Table 1 shows how the jumpers connect the MAXQ2000 power rails to the on-board power supplies.

Using the LCD Display

To use the LCD daughterboard, it should be installed on the J3 connector of the MAXQ2000 EV kit board. Pin 1 on J3 should line up with pin 1 of the LCD daughterboard J1 connector. Note that when the LCD daughterboard is installed correctly, it hangs off the top edge of the MAXQ2000 EV kit board. When the LCD display is in use, V_{LCD} should be connected to +3.6V.

The LCD display on the LCD daughterboard is a static, 4-1/2 digit display. Figure 4 shows how the segments are mapped. If the LCD display is not needed, it can be removed to free up port pins P0.0–P0.7, P1.0–P1.7, P2.0–P2.7, and P3.0–P3.7 for other uses.

Additional Hardware Features

Most of the additional hardware on the MAXQ2000 EV kit board, such as the serial port, the MAX1407, and the 1-Wire interface, can be enabled or disabled by setting jumpers or DIP switches. Disabling unused hardware frees up the associated port pins for other uses.

Table 1. Power-Supply Jumper Settings

JUMPER	SETTING	EFFECT
JU1	(No jumper)	V_{DD} is floating (drive from bench supply)*
JU1	Pins 1 and 2 connected	V_{DD} is driven by +2.5V fixed supply
JU1	Pins 2 and 3 connected	V_{DD} is driven by adjustable supply*
JU2	(No jumper)	V_{DDIO} is floating (drive from bench supply)
JU2	Pins 1 and 2 connected	V_{DDIO} is driven by +3.6V fixed supply
JU2	Pins 2 and 3 connected	V_{DDIO} is driven by adjustable supply
JU3	(No jumper)	V_{LCD} is floating (drive from bench supply)
JU3	Pins 1 and 2 connected	V_{LCD} is driven by +3.6V fixed supply
JU3	Pins 2 and 3 connected	V_{LCD} is driven by adjustable supply

** Refer to the MAXQ2000 data sheet for the allowable range of the V_{DD} supply.*

Table 2. Other Jumper and DIP Switch Settings

JUMPER/ SWITCH	WHEN OPEN/OFF	WHEN CLOSED/ON
JU4	HFXIN is driven by the socketed crystal	HFXIN is connected to HFXADJ
JU5	No effect	P6.0 is connected to DS1077 SCL
JU6	No effect	P6.1 is connected to DS1077 SDA
SW1 #1	No effect	RS-232 DTR/CTS connected (loopback test)
SW1 #2	No effect	RS-232 RTS/DSR connected (loopback test)
SW1 #3	No effect	RTS flow control input connected to P5.2
SW1 #4	No effect	Serial receive connected to P7.1 (RXD0)
SW1 #5	No effect	DTR flow control input connected to P5.3
SW1 #6	No effect	DSR flow control output connected to P6.4
SW1 #7	No effect	Serial transmit connected to P7.0 (TXD0)
SW1 #8	No effect	CTS flow control output connected to P6.5
JU7	No effect	DS2433 data line connected to 1-Wire bus
JU8	No effect	P6.2 (OWOUT) connected to 1-Wire bus
JU9	No effect	P6.3 (OWIN) connected to 1-Wire bus
JU10	No effect	HFXADJ is driven by DS1077L output
JU11	Kit board is powered from J1 supply	Kit board will be powered over JTAG
SW3 #1	No effect	MAX1407 $\overline{\text{RESET}}$ connected to P6.4
SW3 #2	No effect	HFXADJ is driven by MAX1407 FOUT
SW3 #3	No effect	MAX1407 $\overline{\text{CS}}$ connected to P5.4 (SSEL)
SW3 #4	No effect	MAX1407 SCLK connected to P5.6 (SCLK)
SW3 #5	No effect	MAX1407 DIN connected to P5.5 (MOSI)
SW3 #6	No effect	MAX1407 DOUT connected to P5.7 (MISO)
SW3 #7	No effect	MAX1407 $\overline{\text{INT}}$ connected to P6.0
SW3 #8	No effect	MAX1407 $\overline{\text{DRDY}}$ connected to P6.1
SW6 #1	No effect	MAX1407 $\overline{\text{WU1}}$ connected to P6.5
SW6 #2	No effect	SW4 pulls P5.2 to ground when pressed (Note 1)
SW6 #3	No effect	SW4 pulls P5.3 to ground when pressed (Note 1)
SW6 #4	No effect	SW5 pulls P7.0 to ground when pressed (Note 2)
SW6 #5	No effect	SW5 pulls P7.1 to ground when pressed (Note 2)
SW6 #6	No effect	EEPROM SCL connected to P6.0
SW6 #7	No effect	EEPROM SDA connected to P6.1
SW6 #8	No effect	LED bar graph displays Port 0 logic levels

Note 1: If both SW6 #2 and #3 are closed, P5.2 and P5.3 will be shorted together.
Note 2: If both SW6 #4 and #5 are closed, P7.0 and P7.1 will be shorted together.

MAXQ2000 Evaluation Kit

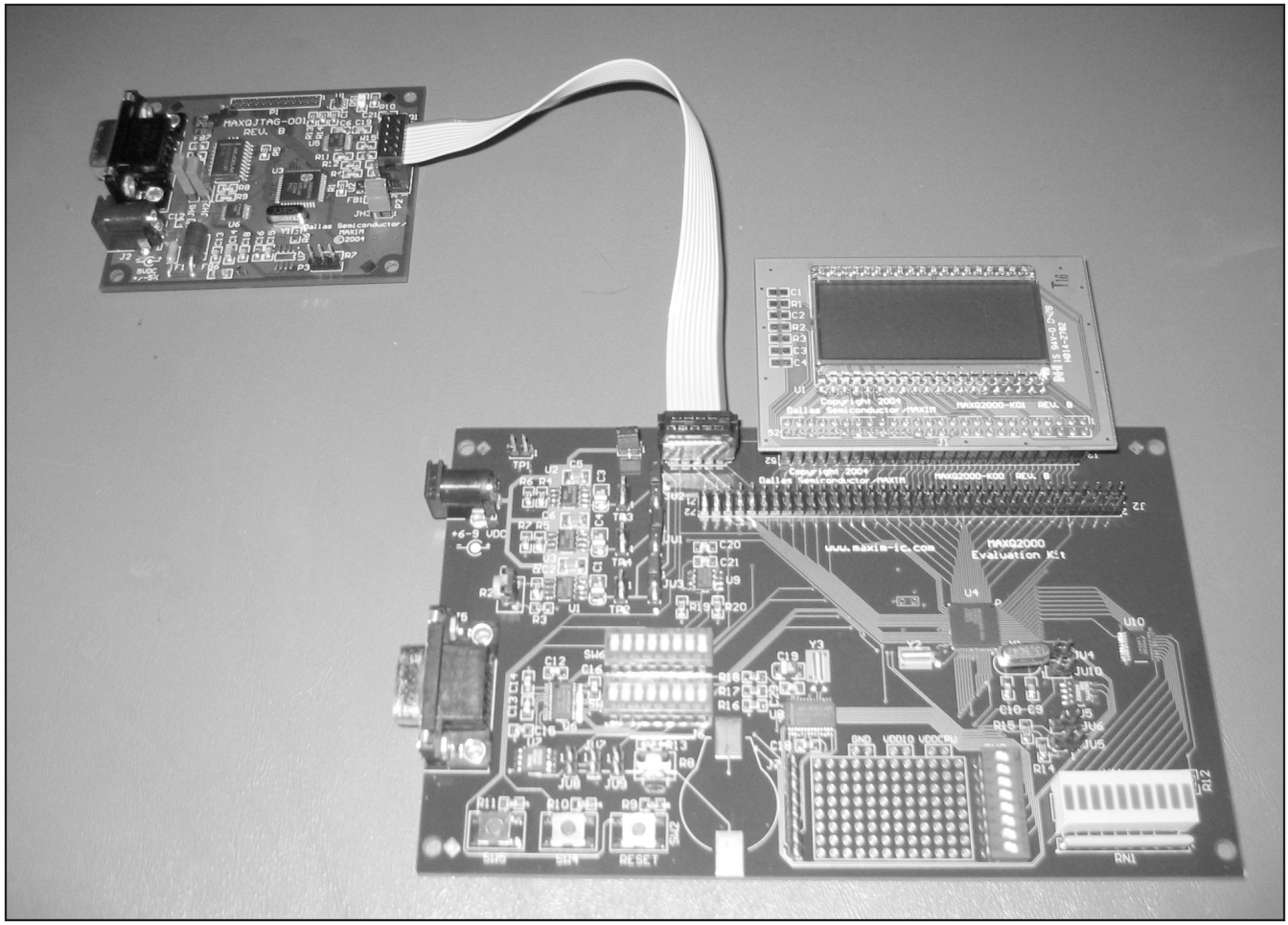

Figure 1. MAXQ2000 Evaluation Kit Setup

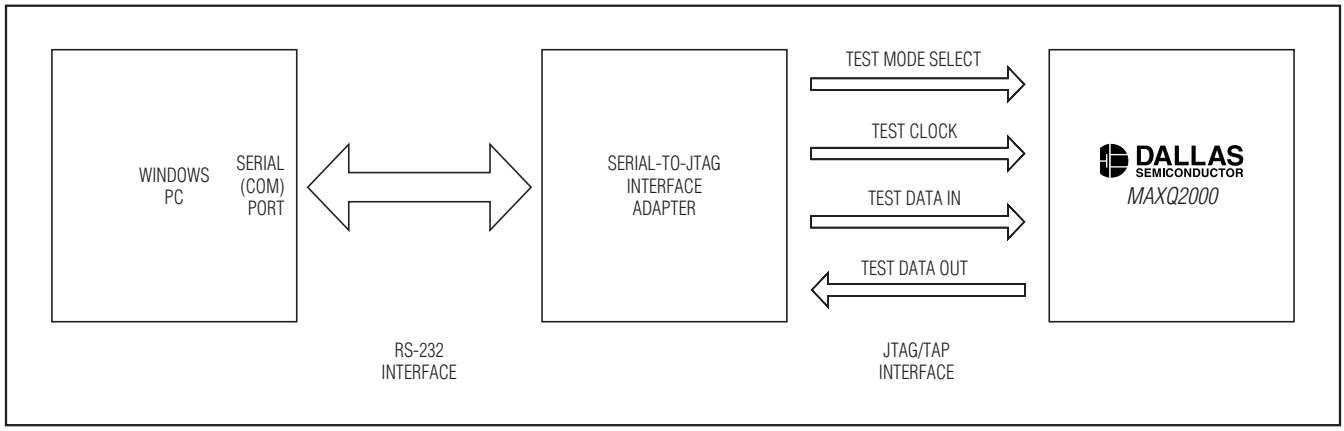

Figure 2. MAXQ2000 Serial-to-JTAG Interface

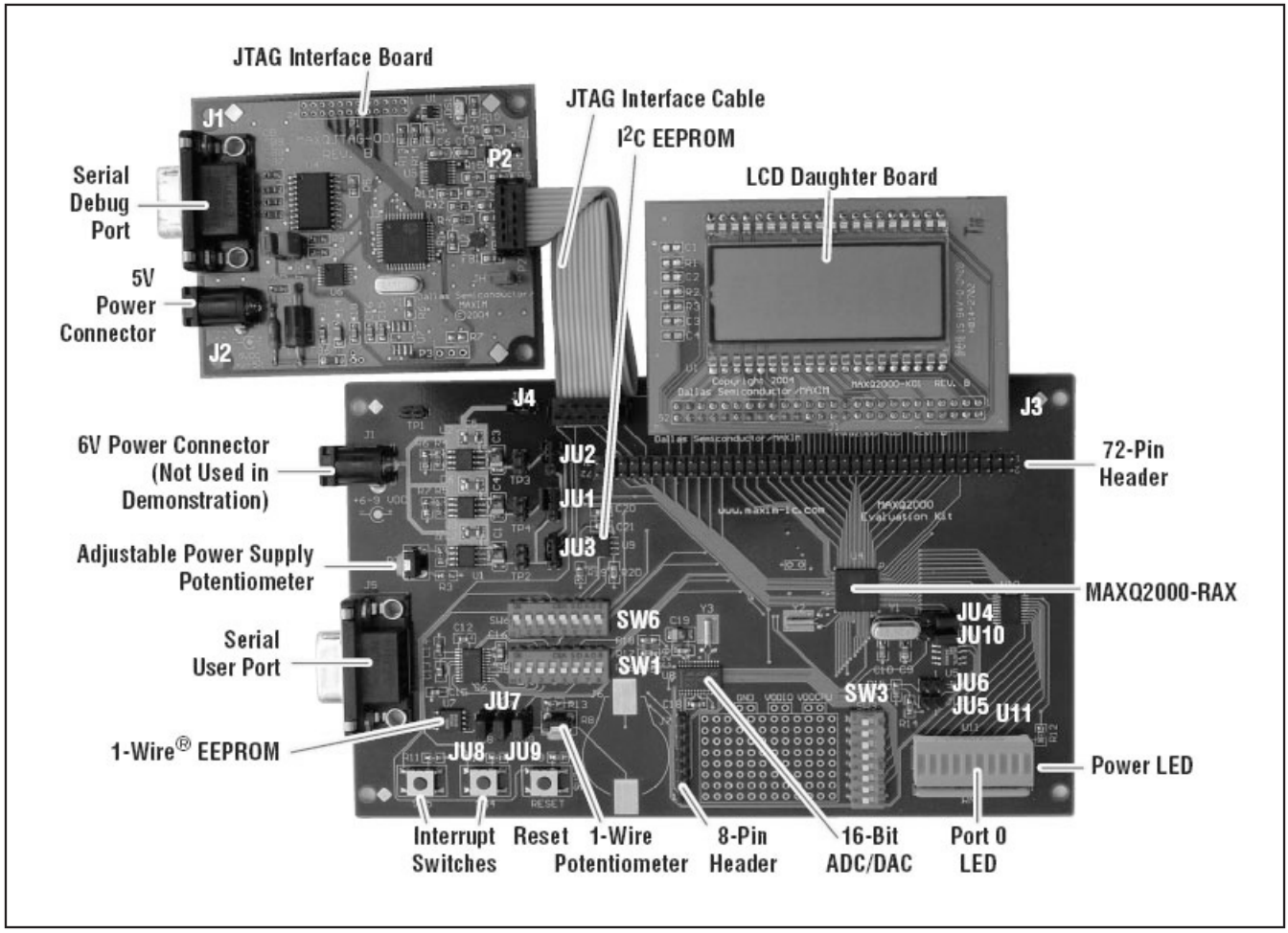

Figure 3. MAXQ2000 Evaluation Kit Functional Layout

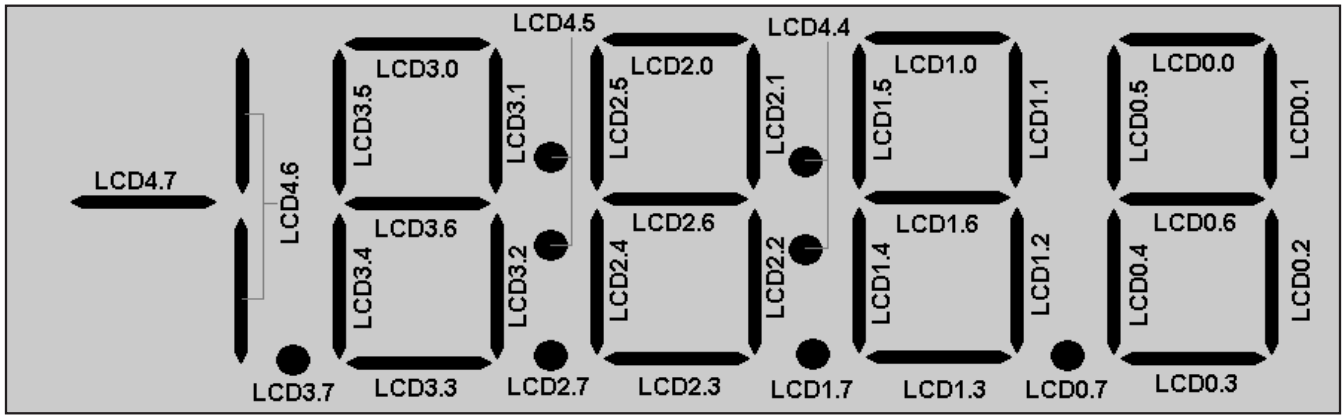

Figure 4. LCD Daughterboard Display Memory Mapping

MAXQ2000 Evaluation Kit

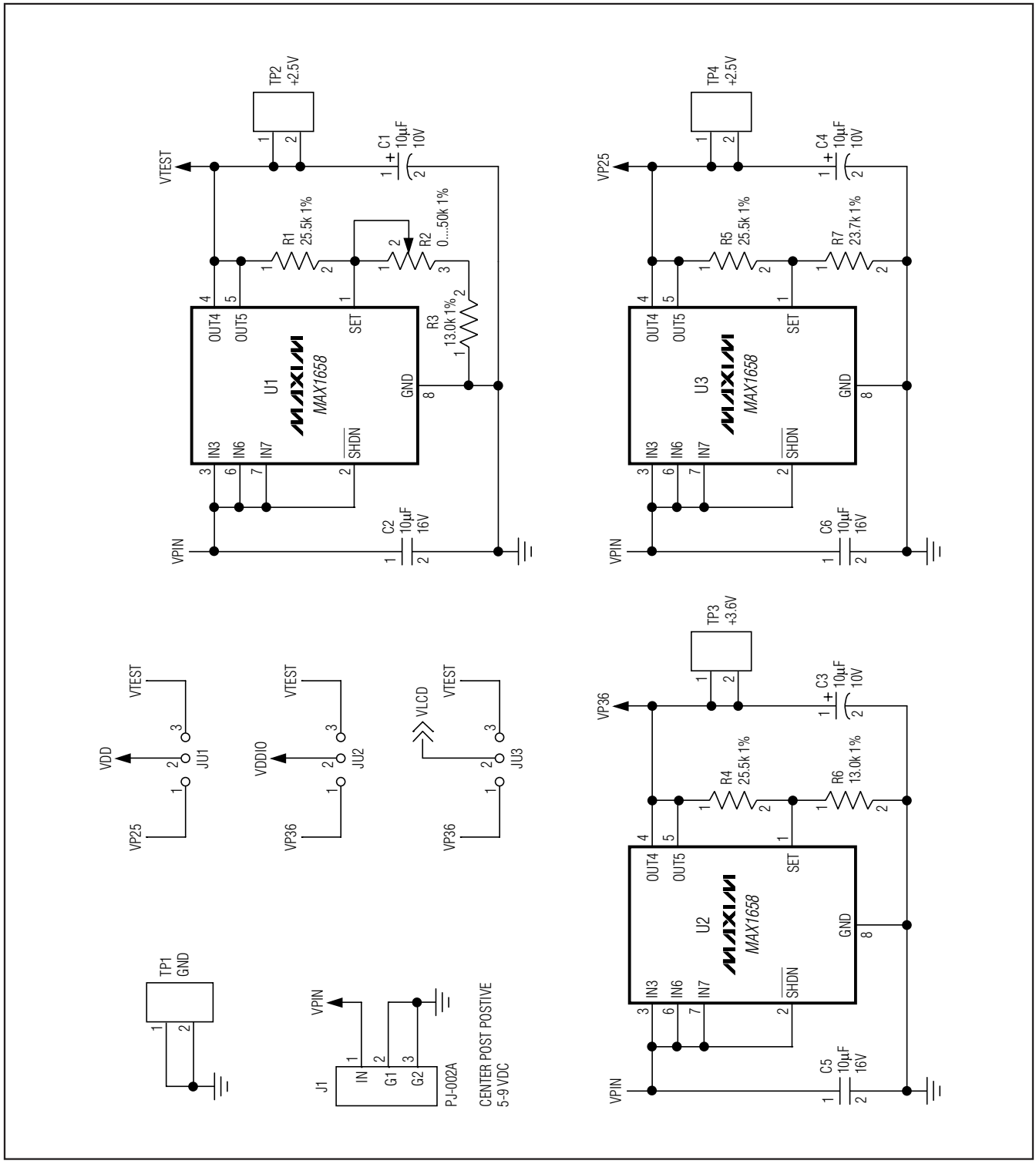

Figure 5. MAXQ2000 Evaluation Kit Power Schematics—Power (1 of 6)

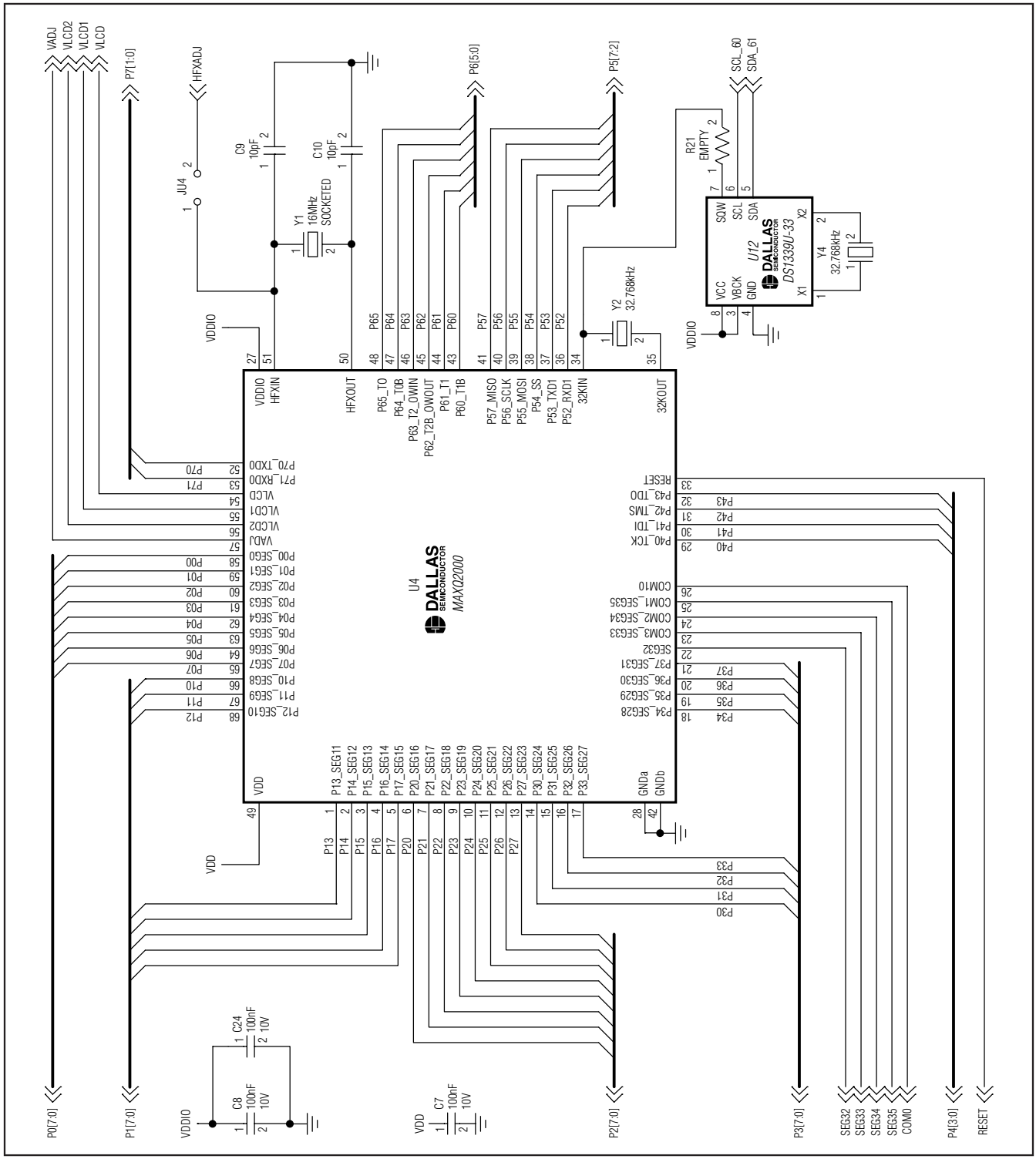

Figure 5. MAXQ2000 Evaluation Kit Power Schematics—Processor (2 of 6)

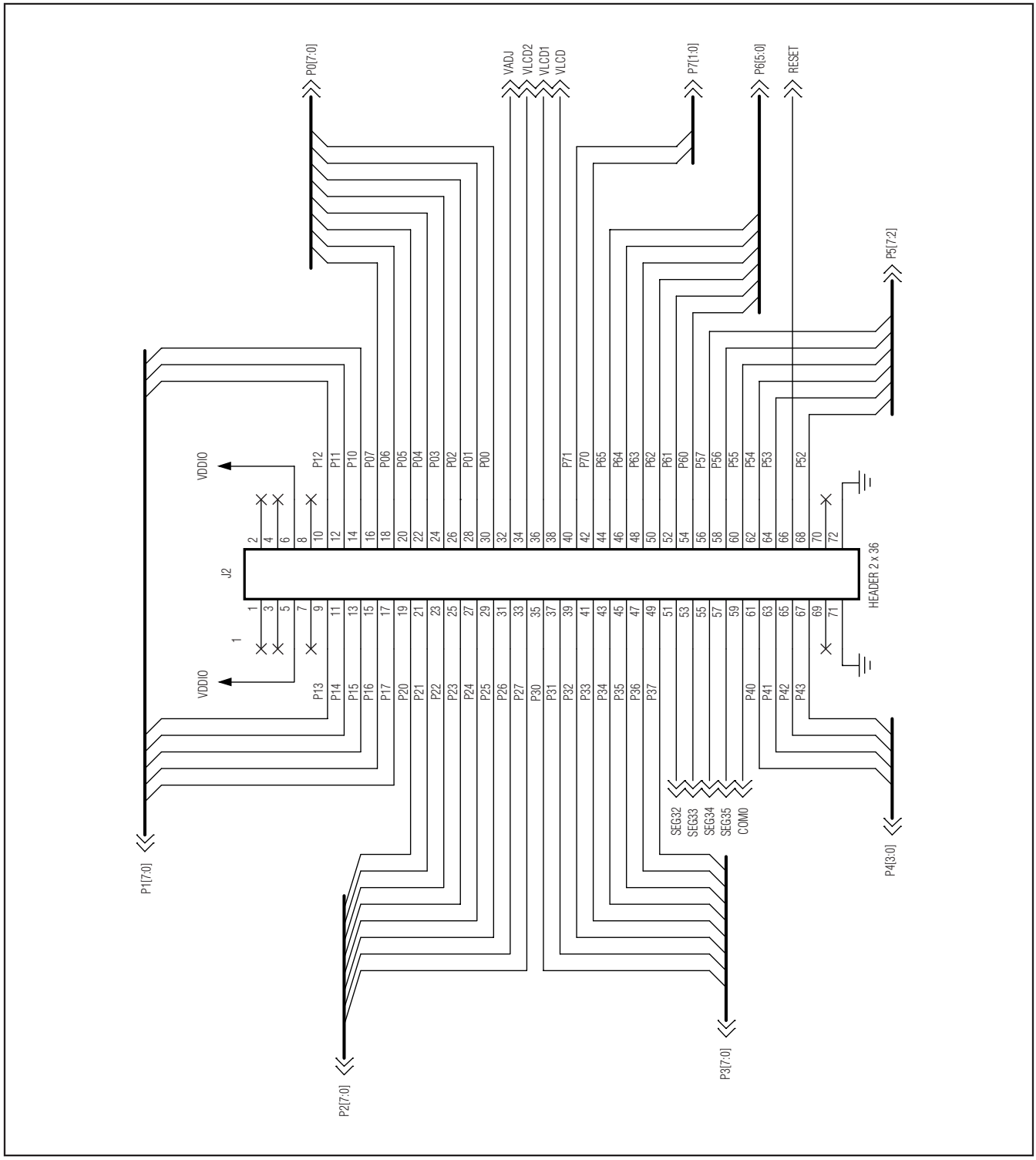

Figure 5. MAXQ2000 Evaluation Kit Power Schematics—ICE Interface/Header (3 of 6)

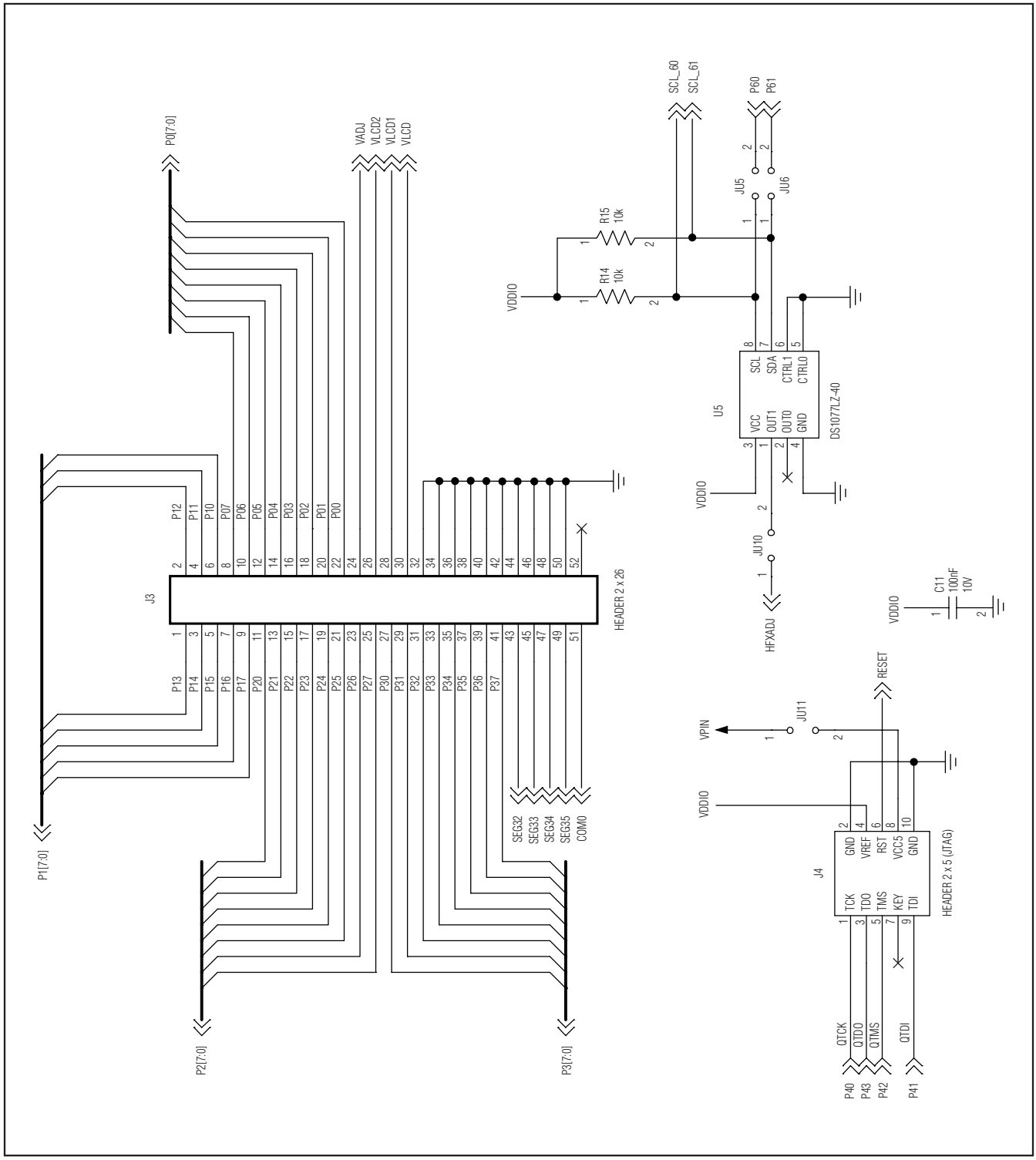

Figure 5. MAXQ2000 Evaluation Kit Power Schematics—LCD/Clock/JTAG (4 of 6)

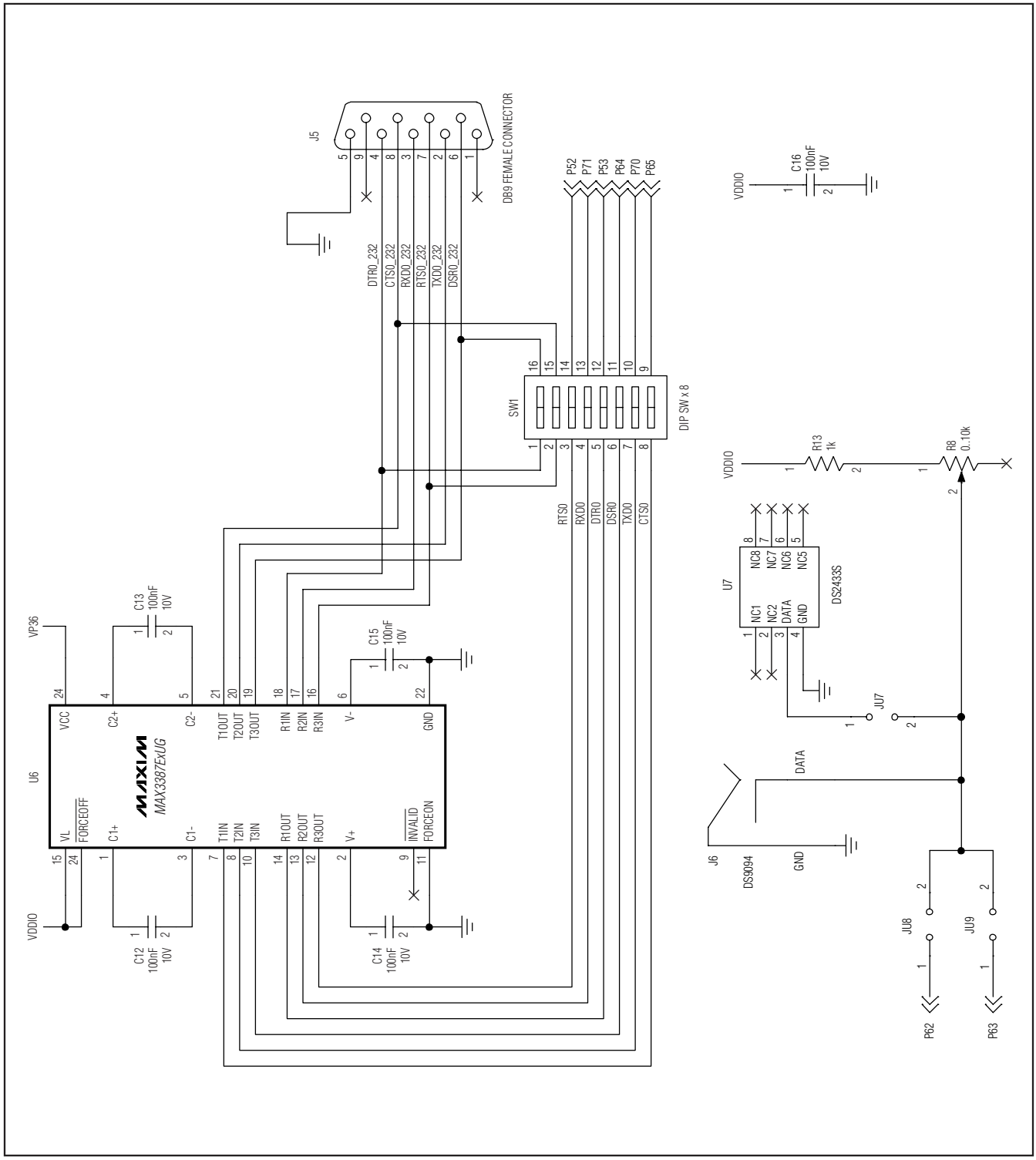

Figure 5. MAXQ2000 Evaluation Kit Power Schematics—Serial/1-Wire (5 of 6)

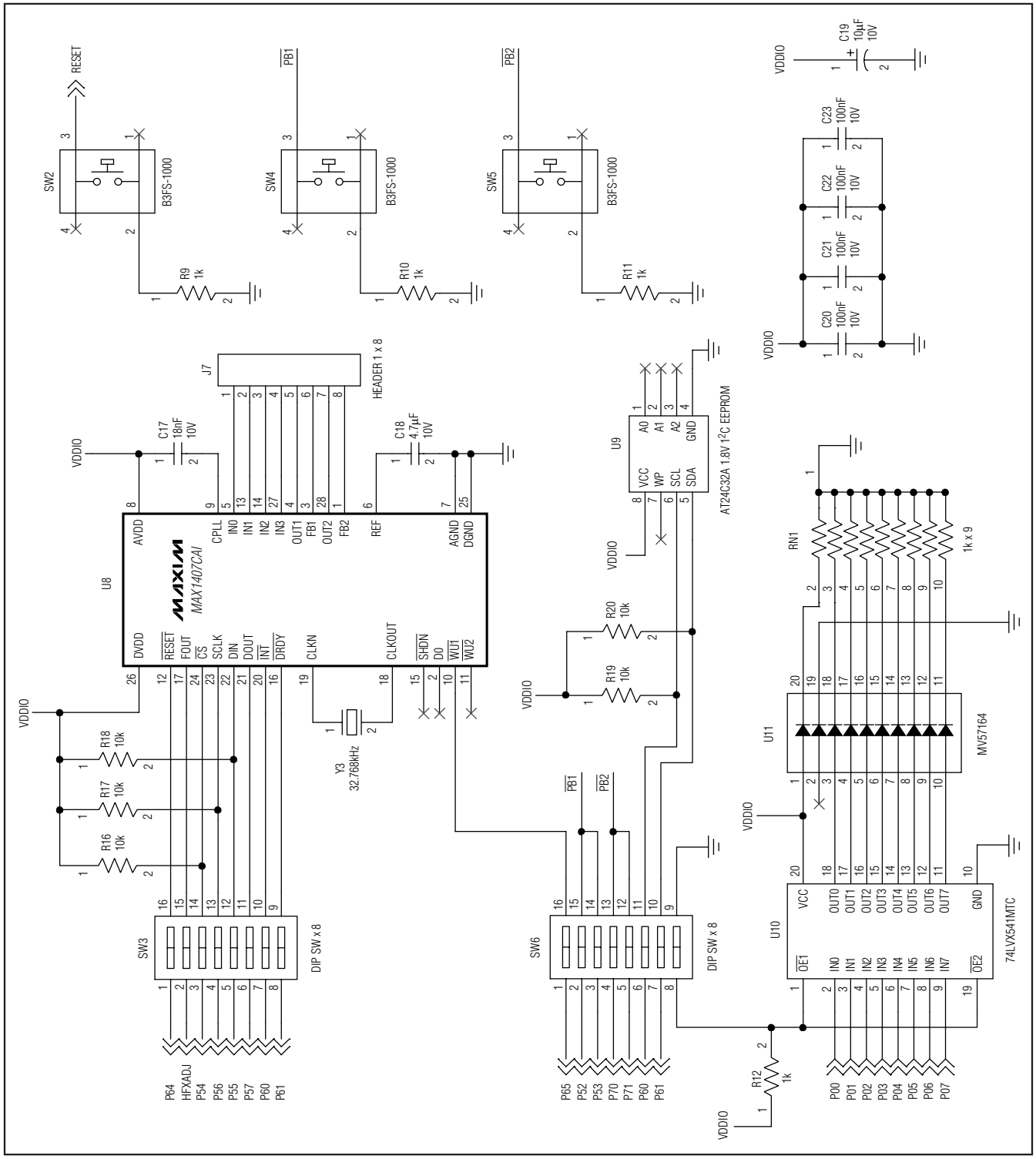

Figure 5. MAXQ2000 Evaluation Kit Power Schematics—MAX1407 (6 of 6)

MAXQ2000 Evaluation Kit

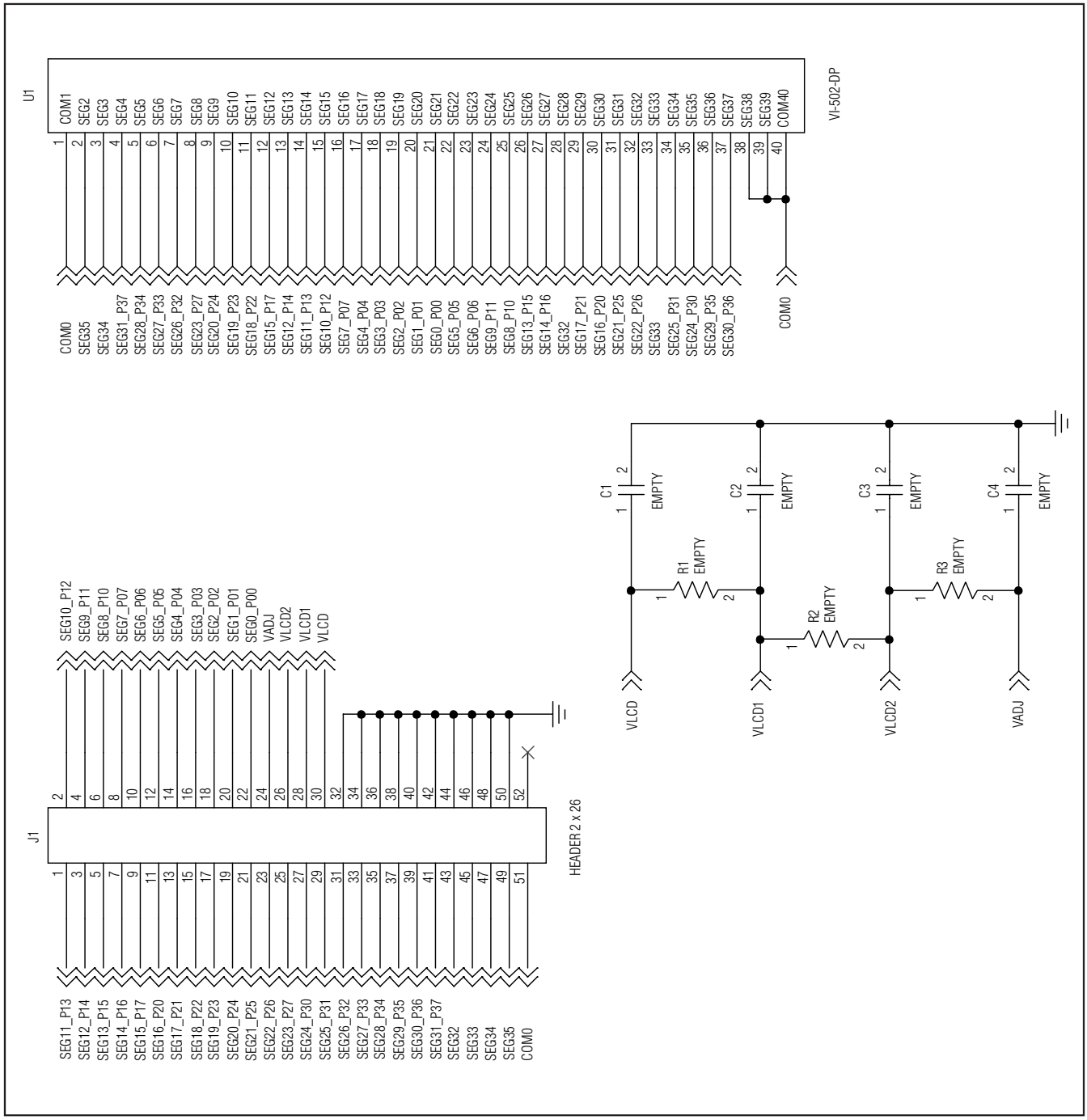

Figure 6. MAXQ2000 Evaluation Kit LCD Daughterboard Schematic

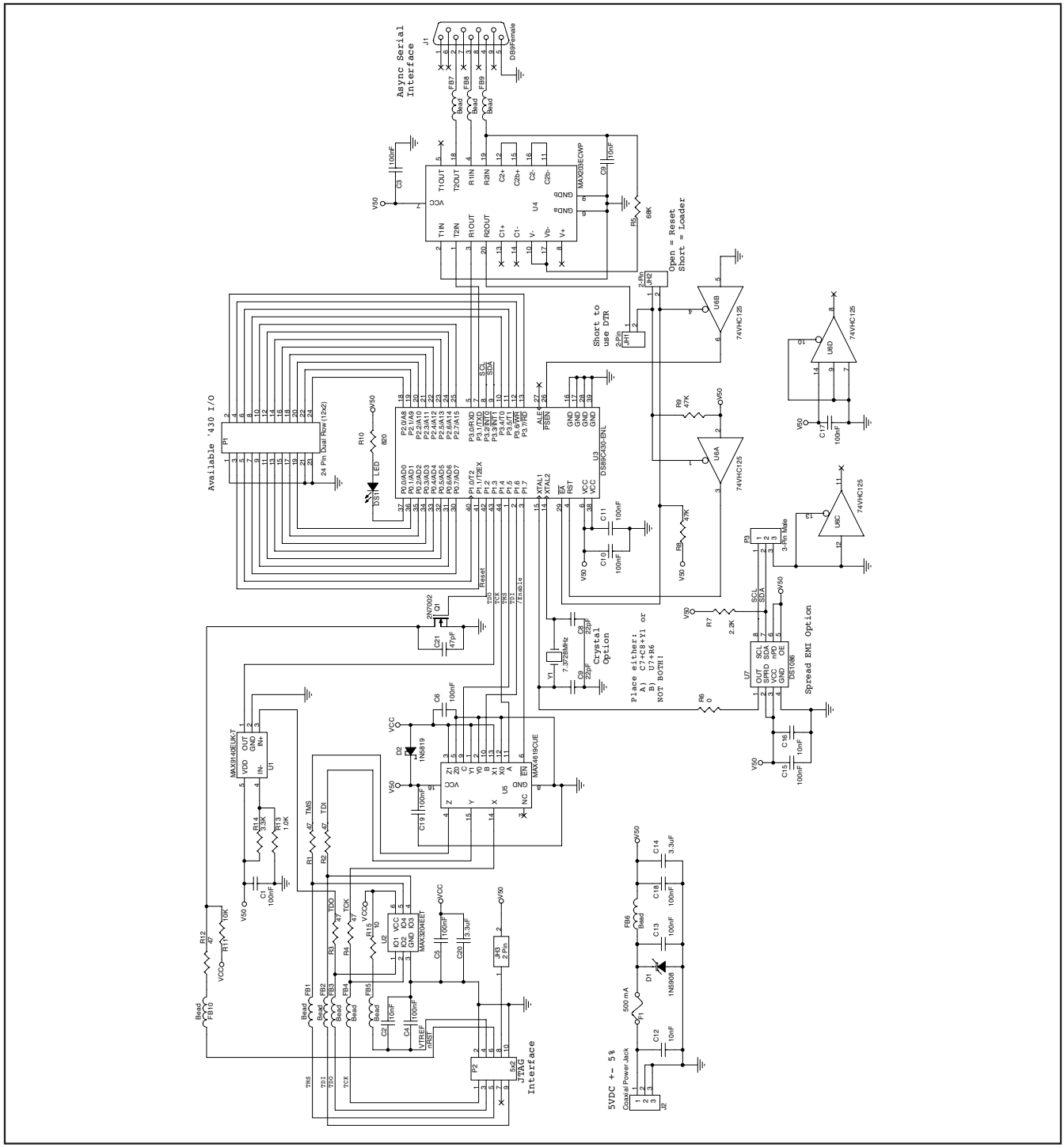

Figure 7. MAXQ2000 Evaluation Kit JTAG Board Schematic

Maxim cannot assume responsibility for use of any circuitry other than circuitry entirely embodied in a Maxim product. No circuit patent licenses are implied. Maxim reserves the right to change the circuitry and specifications without notice at any time.

© 2005 Maxim Integrated Products MAXIM is a registered trademark of Maxim Integrated Products, Inc.

DALLAS SEMICONDUCTOR is a registered trademark of Dallas Semiconductor Corporation.