19-0604; Rev 1; 2/09

EVALUATION KIT AVAILABLE

# CVBS Video Filter Amplifier with SmartSleep and Bidirectional Video Support



## General Description

The MAX9513 CVBS video filter amplifier with SmartSleep and bidirectional video support is ideal for portable DVD players and portable media players (PMPs). The input can be directly connected to the digital-to-analog converter (DAC) output. The reconstruction filter removes high-frequency signals above 6.75MHz. The amplifiers have 6dB of gain, and the outputs can be DC-coupled to a load of 75Ω, which is equivalent to two video loads, or can be AC-coupled to a load of 150Ω.

The SmartSleep circuitry intelligently reduces power consumption based on the presence of the input signal and the output loads. When the MAX9513 does not detect the presence of sync on the input video signal, the supply current is reduced to less than 7µA. The device only enables a video amplifier when there is an active video input signal and an attached load. The video amplifier remains on while a load is connected. If the load is disconnected, the video amplifier is turned off.

The MAX9513 contains one reconstruction filter, two video amplifiers, and a pulldown switch at one of the two CVBS outputs. The MAX9513 has the ability to control the bidirectional video signals at the CVBS video connections without the need for separate switches or relays. This feature is particularly useful for portable DVD players, which often use the same connector to drive a composite video output and to accept an external video signal to display on the LCD panel.

The MAX9513 operates from a 2.7V to 3.6V single supply and is offered in a small 16-pin TQFN (3mm x 3mm) package. The device is specified over the -40°C to +125°C automotive temperature range.

## Applications

Portable DVD Players

Portable Set-Top Boxes

Personal Video Recorders (PVRs)

Portable Media Players (PMPs)

Portable Video

## Features

- **SmartSleep Feature Detects Input Signal and Output Load Status to Reduce Power Consumption**
- **Standard-Definition Video Reconstruction Filter with 6.75MHz Passband**
- **Two Composite Inputs and Outputs**
- **Integrated Support for a Bidirectional Composite Video Signal**
- **Supports Two Video Loads at Each Output (DC-Coupled)**
- **2.7V to 3.6V Single-Supply Operation**

## Ordering Information

| PART | PIN-PACKAGE | TOP MARK |
|---|---|---|
| MAX9513ATE+ | 16 TQFN-EP* (3mm x 3mm) | AFC |

***Note:*** *The device is specified over the -40°C to +125°C operating temperature range.*
*+Denotes lead(Pb)-free/RoHS-compliant package.*
**EP = Exposed pad.*

## Block Diagrams

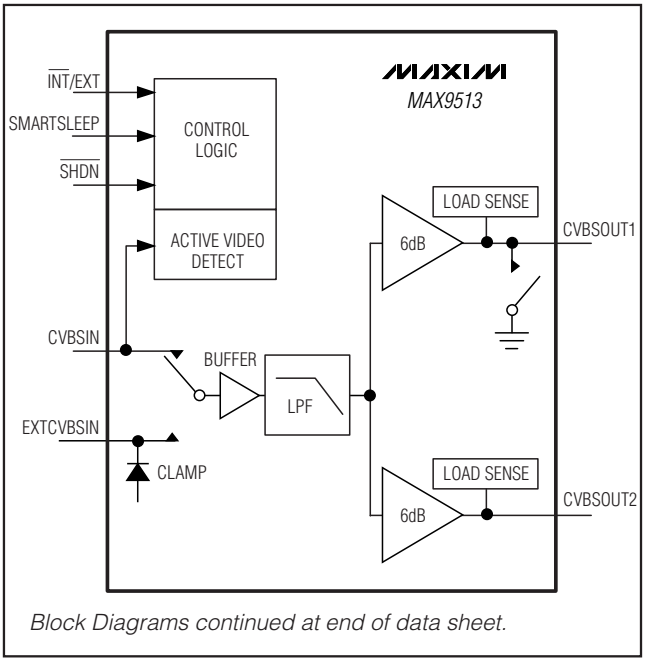


*Block Diagrams continued at end of data sheet.*



***For pricing, delivery, and ordering information, please contact Maxim Direct at 1-888-629-4642, or visit Maxim's website at www.maxim-ic.com.***

# CVBS Video Filter Amplifier with SmartSleep and Bidirectional Video Support

## ABSOLUTE MAXIMUM RATINGS

(Voltages with respect to GND.)
$V_{DD}$ .....-0.3V to +4V
SMARTSLEEP, $\overline{SHDN}$, $\overline{INT}$/EXT, CVBSIN, EXTCVBSIN .....-0.3V to +4V
Duration of Short Circuit to $V_{DD}$ or GND (CVBSOUT1, CVBSOUT2).....Continuous
Continuous Input Current
EXTCVBSIN, CVBSIN, SMARTSLEEP, $\overline{SHDN}$, $\overline{INT}$/EXT .....±20mA

Continuous Power Dissipation ($T_A$ = +70°C)
16-Pin TQFN (derate 15.6mW/°C above +70°C).....1250mW
Operating Temperature Range .....-40°C to +125°C
Junction Temperature.....+150°C
Storage Temperature Range .....-65°C to +150°C
Lead Temperature (soldering, 10s) .....+300°C

*Stresses beyond those listed under "Absolute Maximum Ratings" may cause permanent damage to the device. These are stress ratings only, and functional operation of the device at these or any other conditions beyond those indicated in the operational sections of the specifications is not implied. Exposure to absolute maximum rating conditions for extended periods may affect device reliability.*

## ELECTRICAL CHARACTERISTICS

($V_{DD}$ = $V_{\overline{SHDN}}$ = 3.3V, $V_{SMARTSLEEP}$ = $V_{\overline{INT}/EXT}$ = $V_{GND}$ = 0V, $R_L$ = no load. $T_A$ = $T_{MIN}$ to $T_{MAX}$, unless otherwise noted. Typical values are at $T_A$ = +25°C.) (Note 1)

| PARAMETER | SYMBOL | CONDITIONS | | MIN | TYP | MAX | UNITS |
|---|---|---|---|---|---|---|---|
| Supply Voltage Range | $V_{DD}$ | Guaranteed by PSRR | | 2.7 | | 3.6 | V |
| Supply Current | $I_{DD}$ | $\overline{INT}$/EXT = GND, $V_{CVBSIN}$ = 0.3V | | | 13 | 16 | mA |
| | | $\overline{INT}$/EXT = $V_{DD}$, EXTCVBSIN is unconnected | | | 4.3 | 6 | |
| | | SMARTSLEEP = $V_{DD}$, CVBSIN has no active video signal | | | 7 | 14 | µA |
| | | SMARTSLEEP = $V_{DD}$, CVBSIN has a black-burst video signal with sync tip at GND (Note 2) | | | 17 | | |
| Shutdown Supply Current | $I_{SHDN}$ | $\overline{SHDN}$ = GND | | | 0.01 | 10 | µA |
| **SMARTSLEEP CHARACTERISTICS** | | | | | | | |
| Minimum Line Frequency | | CVBSIN | | 14.3 | | | kHz |
| Sync Slice Level | | CVBSIN | | 4.1 | | 5.2 | % $V_{DD}$ |
| Output Load Detect Threshold | | Sync pulse present, $R_L$ to GND | | | | 200 | Ω |
| **DC CHARACTERISTICS** | | | | | | | |
| Input Voltage Range | $V_{IN}$ | CVBSIN, guaranteed by output voltage swing | 2.7V < $V_{DD}$ < 3.6V | 0 | | 1.05 | V |
| | | | 3.0V < $V_{DD}$ < 3.6V | 0 | | 1.2 | |
| Input Current | $I_{IN}$ | $V_{CVBSIN}$ = 0V | | | 2 | 5 | µA |
| Input Resistance | $R_{IN}$ | CVBSIN | | | 20 | | MΩ |

## ELECTRICAL CHARACTERISTICS (continued)

($V_{DD}$ = $V_{\overline{SHDN}}$ = 3.3V, $V_{SMARTSLEEP}$ = $V_{\overline{INT}/EXT}$ = $V_{GND}$ = 0V, $R_L$ = no load. $T_A$ = $T_{MIN}$ to $T_{MAX}$, unless otherwise noted. Typical values are at $T_A$ = +25°C.) (Note 1)

| PARAMETER | SYMBOL | CONDITIONS | | MIN | TYP | MAX | UNITS |
|---|---|---|---|---|---|---|---|
| Sync-Tip Clamp Level | $V_{CLP}$ | EXTCVBSIN | | 0.25 | | 0.37 | V |
| Input Clamping Current | | EXTCVBSIN = 500mV + $V_{CLP}$ | | 0.5 | 1 | 1.5 | µA |
| EXTCVBSIN Input Voltage Range | | Guaranteed by output voltage swing | 2.7V < $V_{DD}$ < 3.6V | | | 1.05 | $V_{P-P}$ |
| | | | 3.0V < $V_{DD}$ < 3.6V | | | 1.2 | |
| Sync Crush | | EXTCVBSIN, percentage reduction in sync pulse (0.3$V_{P-P}$), guaranteed by input clamping current measurement, measured at input | | | | 2 | % |
| Maximum Input Source Resistance | | EXTCVBSIN | | | 300 | | Ω |
| DC Voltage Gain | $A_V$ | $R_L$ = 150Ω to $V_{DD}$ / 2, 0V ≤ $V_{IN}$ ≤ 1.05V, $V_{DD}$ = 2.7V | | 5.7 | 6 | 6.3 | dB |
| DC Gain Matching | | $R_L$ = 150Ω to $V_{DD}$ / 2, 0V ≤ $V_{IN}$ ≤ 1.05V, $V_{DD}$ = 2.7V | | -0.2 | 0 | +0.2 | dB |
| Output Level | | $V_{CVBSIN}$ = 0V, $\overline{INT}$/EXT = GND, $R_L$ = 150Ω to GND | | 0.21 | 0.3 | 0.38 | V |
| | | $C_{EXTCVBSIN}$ = 0.1µF to GND, $\overline{INT}$/EXT = $V_{DD}$, $R_L$ = 150Ω to GND | | 0.21 | 0.27 | 0.38 | |
| Output Voltage Swing | | Measured at output, $V_{DD}$ = 2.7V, 0V ≤ $V_{IN}$ ≤ 1.05V, $R_L$ = 150Ω to -0.2V | $T_A$ = -40°C to +85°C | 2.027 | 2.1 | 2.163 | $V_{P-P}$ |
| | | | $T_A$ = -40°C to +125°C | 2.006 | | 2.163 | |
| | | Measured at output, $V_{DD}$ = 2.7V, 0V ≤ $V_{IN}$ ≤ 1.05V, $R_L$ = 150Ω to $V_{DD}$ / 2 | | 2.027 | 2.1 | 2.163 | |
| | | Measured at output, $V_{DD}$ = 3V, 0V ≤ $V_{IN}$ ≤ 1.2V, $R_L$ = 150Ω to -0.2V | $T_A$ = -40°C to +85°C | 2.316 | 2.4 | 2.472 | |
| | | | $T_A$ = -40°C to +125°C | 2.292 | | 2.472 | |
| | | Measured at output, $V_{DD}$ = 3V, 0V ≤ $V_{IN}$ ≤ 1.2V, $R_L$ = 150Ω to $V_{DD}$ / 2 | | 2.316 | 2.4 | 2.472 | |
| | | Measured at output, $V_{DD}$ = 3.135V, 0V ≤ $V_{IN}$ ≤ 1.05V, $R_L$ = 75Ω to -0.2V | | 2.027 | 2.1 | 2.163 | |
| Output Resistance | $R_{OUT}$ | $V_{OUT}$ = 1.3V, -5mA ≤ $I_{LOAD}$ ≤ +5mA | | | 0.47 | | Ω |

# CVBS Video Filter Amplifier with SmartSleep and Bidirectional Video Support

## ELECTRICAL CHARACTERISTICS (continued)

($V_{DD}$ = $V_{\overline{SHDN}}$ = 3.3V, $V_{SMARTSLEEP}$ = $V_{\overline{INT}/EXT}$ = $V_{GND}$ = 0V, $R_L$ = no load. $T_A$ = $T_{MIN}$ to $T_{MAX}$, unless otherwise noted. Typical values are at $T_A$ = +25°C.) (Note 1)

| PARAMETER | SYMBOL | CONDITIONS | MIN | TYP | MAX | UNITS |
|---|---|---|---|---|---|---|
| Power-Supply Rejection Ratio | PSRR | 2.7V ≤ $V_{DD}$ ≤ 3.6V, input referred, $R_L$ = 150Ω to GND | 48 | | | dB |
| Output Pulldown Resistance | $R_{PD}$ | $\overline{INT}$/EXT = $V_{DD}$, CVBSOUT1 | | 3.7 | | Ω |
| Output Shutdown Impedance | | | | 28 | | kΩ |
| **LOGIC INPUTS (SMARTSLEEP, $\overline{SHDN}$, $\overline{INT}$/EXT)** | | | | | | |
| Logic-Low Threshold | $V_{IL}$ | | | | 0.3 x $V_{DD}$ | V |
| Logic-High Threshold | $V_{IH}$ | | 0.7 x $V_{DD}$ | | | V |
| Logic Input Current | $I_{IL}$ / $I_{IH}$ | $V_I$ = 0V or $V_{DD}$ | | 0.01 | 10 | µA |

## AC ELECTRICAL CHARACTERISTICS

($V_{DD}$ = $V_{\overline{SHDN}}$ = 3.3V, $V_{SMARTSLEEP}$ = $V_{\overline{INT}/EXT}$ = $V_{GND}$ = 0V, $R_L$ = 150Ω to GND. $T_A$ = $T_{MIN}$ to $T_{MAX}$, unless otherwise noted. Typical values are at $T_A$ = +25°C.) (Note 1)

| PARAMETER | SYMBOL | CONDITIONS | | MIN | TYP | MAX | UNITS |
|---|---|---|---|---|---|---|---|
| Standard-Definition Reconstruction Filter | | Inputs are $1V_{P-P}$, reference frequency is 1MHz | f = 5.5MHz | | -0.1 | | dB |
| | | | f = 6.75MHz | -1 | -0.3 | +1 | |
| | | | f = 11MHz | | -3 | | |
| | | | f = 27MHz | -33 | -41 | | |
| Differential Gain | DG | DC-coupled output, 5-step modulated staircase | f = 3.58MHz or 4.43MHz | | 0.2 | | % |
| | | AC-coupled output, 5-step modulated staircase | f = 3.58MHz or 4.43MHz | | 0.4 | | |
| Differential Phase | DP | DC-coupled output, 5-step modulated staircase | f = 3.58MHz | | 0.62 | | Degrees |
| | | | f = 4.43MHz | | 0.75 | | |
| | | AC-coupled output, 5-step modulated staircase | f = 3.58MHz | | 0.78 | | |
| | | | f = 4.43MHz | | 1.01 | | |
| 2T Pulse Response | | 2T = 200ns or 250ns | | | 0.2 | | K% |
| 2T Bar Response | | Bar time is 18µs, the beginning 2.5% and the ending 2.5% of the bar time are ignored, 2T = 200ns or 250ns | | | 0.2 | | K% |
| 2T Pulse-to-Bar K Rating | | Bar time is 18µs, the beginning 2.5% and the ending 2.5% of the bar time are ignored, 2T = 200ns or 250ns | | | 0.3 | | K% |

## AC ELECTRICAL CHARACTERISTICS (continued)

($V_{DD}$ = $V_{\overline{SHDN}}$ = 3.3V, $V_{SMARTSLEEP}$ = $V_{\overline{INT}/EXT}$ = $V_{GND}$ = 0V, $R_L$ = 150Ω to GND. $T_A$ = $T_{MIN}$ to $T_{MAX}$, unless otherwise noted. Typical values are at $T_A$ = +25°C.) (Note 1)

| PARAMETER | SYMBOL | CONDITIONS | MIN | TYP | MAX | UNITS |
|---|---|---|---|---|---|---|
| Nonlinearity | | 5-step staircase | | 0.1 | | % |
| Group Delay Distortion | | 100kHz ≤ f ≤ 5MHz, inputs are $1V_{P-P}$ | | 10 | | ns |
| Peak Signal to RMS Noise | | 100kHz ≤ f ≤ 5MHz, inputs are $1V_{P-P}$ | | 67 | | dB |
| Power-Supply Rejection Ratio | | f = 100kHz, $200mV_{P-P}$, input referred | | 43 | | dB |
| Output Impedance | | f = 5MHz | | 6 | | Ω |
| Enable Time | | CVBSIN = 1V, output settled to within 1% of the final voltage, $R_L$ = 150Ω to GND | | 13 | | µs |
| Disable Time | | CVBSIN = 1V, output settled to within 1% of the final voltage, $R_L$ = 150Ω to GND | | 1.1 | | µs |
| **CROSSTALK** | | | | | | |
| All Hostile Output Crosstalk | | f = 4.43MHz | | -70 | | dB |
| All Hostile Input Crosstalk | | f = 4.43MHz, $\overline{SHDN}$ = GND, input termination resistors are 75Ω | | -69 | | dB |

**Note 1:** All devices are 100% production tested at $T_A$ = +25°C. Specifications over temperature limits are guaranteed by design.
**Note 2:** Specified current is an average over time.

# CVBS Video Filter Amplifier with SmartSleep and Bidirectional Video Support

## Typical Operating Characteristics

($V_{DD}$ = $V_{\overline{SHDN}}$ = +3.3V, $V_{SMARTSLEEP}$ = $V_{\overline{INT}/EXT}$ = $V_{GND}$ = 0V. $R_L$ = 150Ω to GND. $T_A$ = +25°C, unless otherwise noted.)

**SMALL-SIGNAL GAIN vs. FREQUENCY**

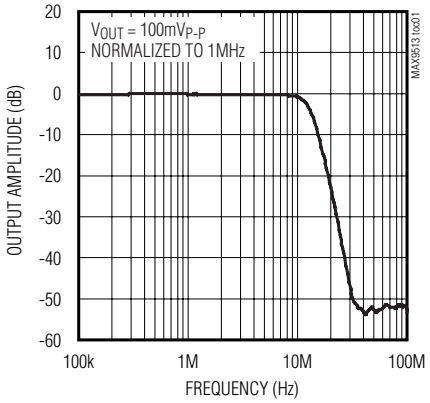


**SMALL-SIGNAL GAIN FLATNESS vs. FREQUENCY**

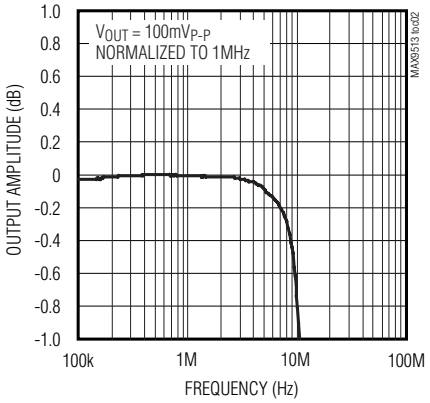


**LARGE-SIGNAL GAIN vs. FREQUENCY**

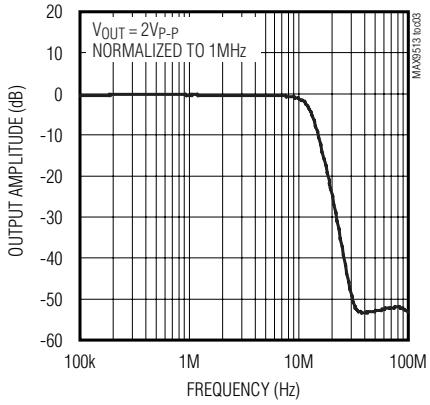


**LARGE-SIGNAL GAIN FLATNESS vs. FREQUENCY**

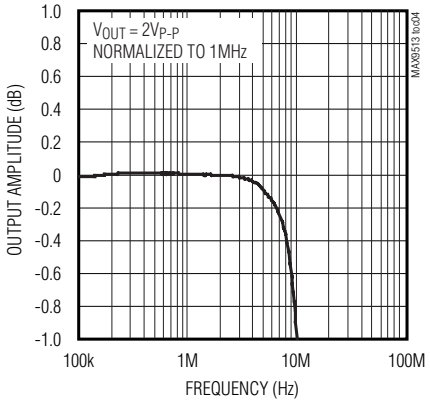


**GROUP DELAY**

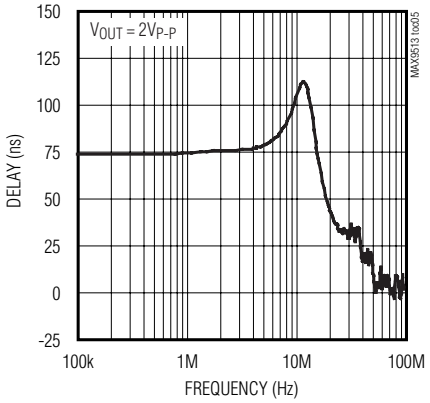


**POWER-SUPPLY REJECTION RATIO vs. FREQUENCY**

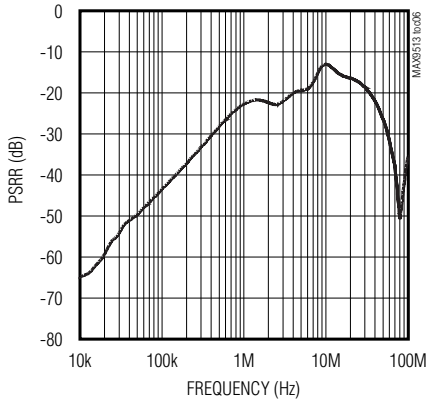


**QUIESCENT SUPPLY CURRENT vs. TEMPERATURE**

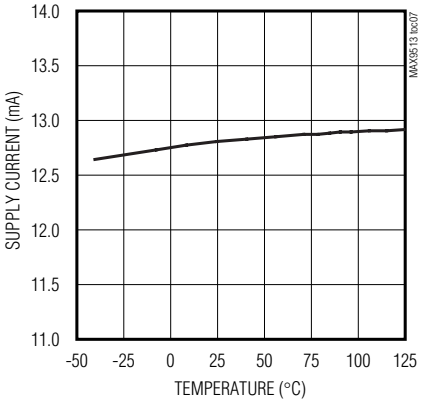


**VOLTAGE GAIN vs. TEMPERATURE**

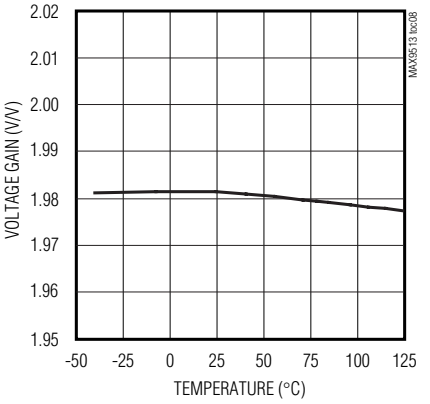


**OUTPUT VOLTAGE vs. INPUT VOLTAGE**

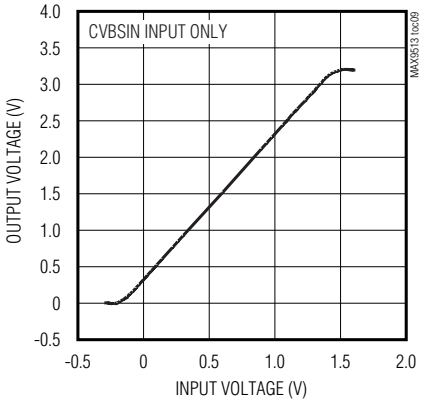

# CVBS Video Filter Amplifier with SmartSleep and Bidirectional Video Support

## Typical Operating Characteristics (continued)

($V_{DD}$ = $V_{\overline{SHDN}}$ = +3.3V, $V_{SMARTSLEEP}$ = $V_{\overline{INT}/EXT}$ = $V_{GND}$ = 0V. $R_L$ = 150Ω to GND. $T_A$ = +25°C, unless otherwise noted.)

**DIFFERENTIAL GAIN AND PHASE**

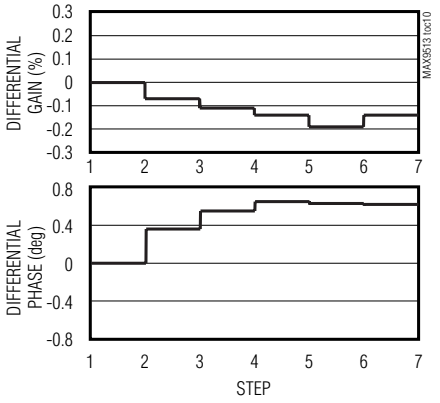


**2T RESPONSE**

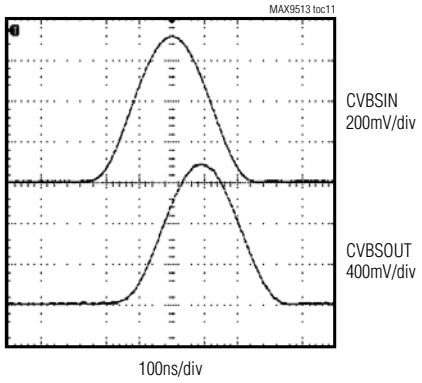


**12.5T RESPONSE**

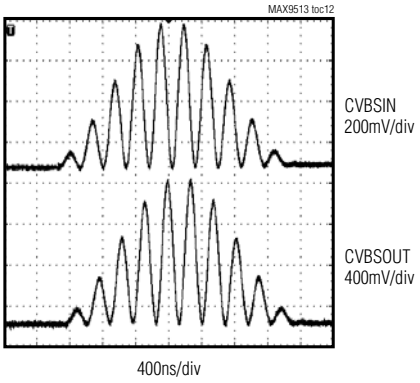


**NTC-7 VIDEO TEST SIGNAL ON CVBS OUTPUTS**

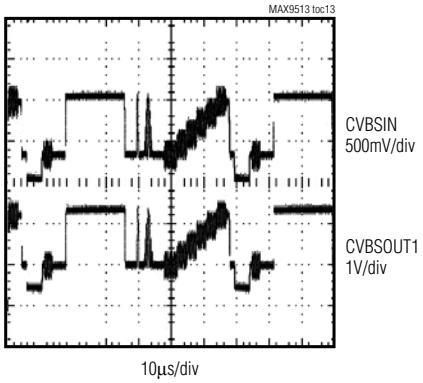


**PAL MULTIBURST RESPONSE**

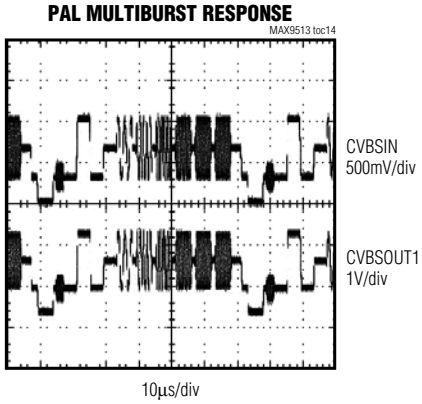


**PAL COLOR BARS**

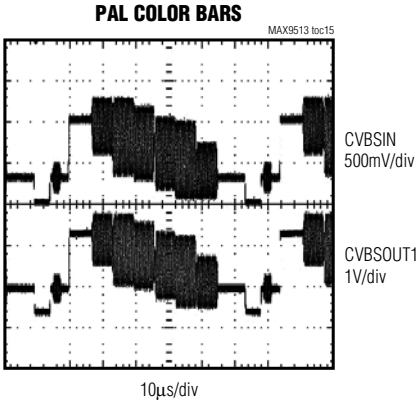

# CVBS Video Filter Amplifier with SmartSleep and Bidirectional Video Support

## Typical Operating Characteristics (continued)

($V_{DD}$ = $V_{\overline{SHDN}}$ = +3.3V, $V_{SMARTSLEEP}$ = $V_{\overline{INT}/EXT}$ = $V_{GND}$ = 0V. $R_L$ = 150Ω to GND. $T_A$ = +25°C, unless otherwise noted.)

**FIELD SQUARE-WAVE RESPONSE**

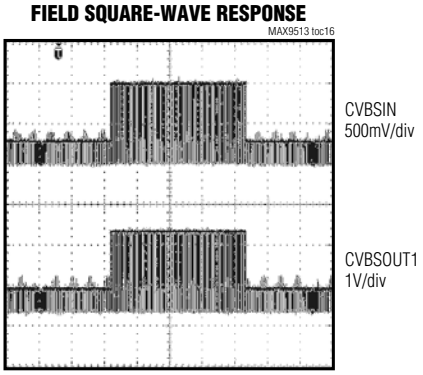


**ENABLE TIME**

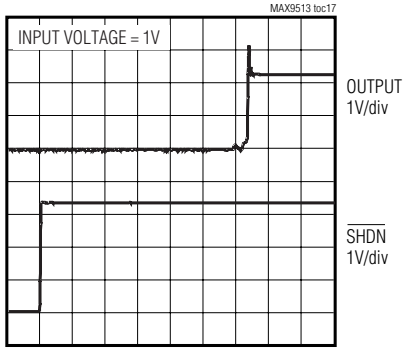


**DISABLE TIME**

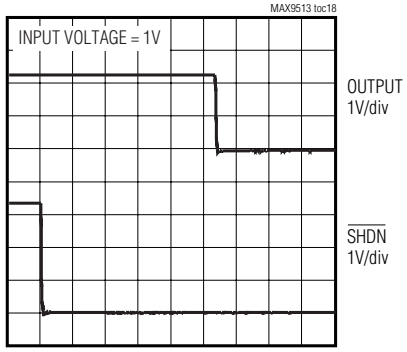


**PULLDOWN RESISTANCE DISTRIBUTION**

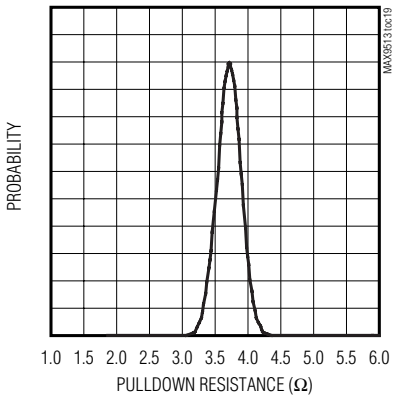


**PULLDOWN RESISTANCE vs. TEMPERATURE**

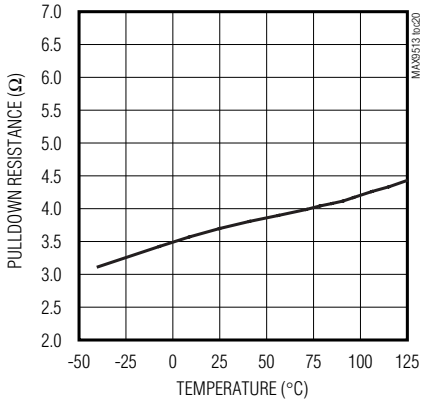


**FREQUENCY RESPONSE AT 6.75MHz DISTRIBUTION**

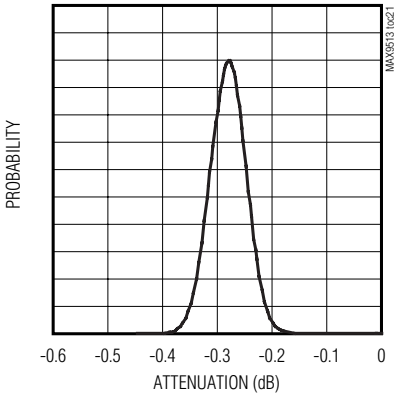

# CVBS Video Filter Amplifier with SmartSleep and Bidirectional Video Support

## Typical Operating Characteristics (continued)

($V_{DD}$ = $V_{\overline{SHDN}}$ = +3.3V, $V_{SMARTSLEEP}$ = $V_{\overline{INT}/EXT}$ = $V_{GND}$ = 0V. $R_L$ = 150Ω to GND. $T_A$ = +25°C, unless otherwise noted.)

**FREQUENCY RESPONSE AT 27MHz DISTRIBUTION**

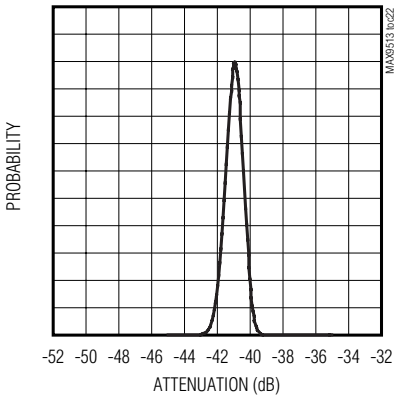


**INPUT-TO-INPUT CROSSTALK vs. FREQUENCY**

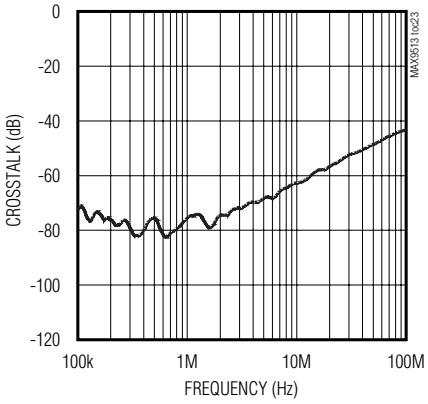


**OUTPUT IMPEDANCE vs. FREQUENCY**

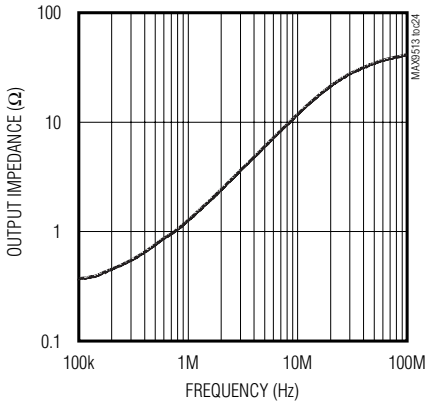


## Pin Description

| PIN | NAME | FUNCTION |
|---|---|---|
| 1, 13 | $V_{DD}$ | Power Supply. Bypass $V_{DD}$ with a 0.1µF capacitor to ground. |
| 2, 3, 8, 16 | GND | Ground |
| 4 | CVBSIN | Internal CVBS Signal Input. Directly connect this input to the video DAC output. |
| 5 | EXTCVBSIN | External CVBS Signal Input. AC-couple the signal through a 0.1µF capacitor to this input. |
| 6 | $\overline{SHDN}$ | Active-Low Shutdown Logic Input. Connect to logic-low to place device in shutdown. Connect to logic-high for normal operation. |
| 7, 11, 12 | N.C. | No Connection. Connect to GND. |
| 9 | CVBSOUT2 | CVBS Output 2 |
| 10 | CVBSOUT1 | CVBS Output 1. CVBSOUT1 is actively pulled to GND when $\overline{INT}$/EXT is logic-high. |
| 14 | $\overline{INT}$/EXT | Internal/External CVBS Logic Input. Connect $\overline{INT}$/EXT low to process CVBS video signals from CVBSIN input. Connect $\overline{INT}$/EXT high to process CVBS video signals from EXTCVBSIN input. |
| 15 | SMARTSLEEP | SmartSleep Logic Input. Connect to logic-high to activate SmartSleep operation. |
| — | EP | Exposed Pad. Connect EP to GND. EP is also internally connected to GND. |

# CVBS Video Filter Amplifier with SmartSleep and Bidirectional Video Support

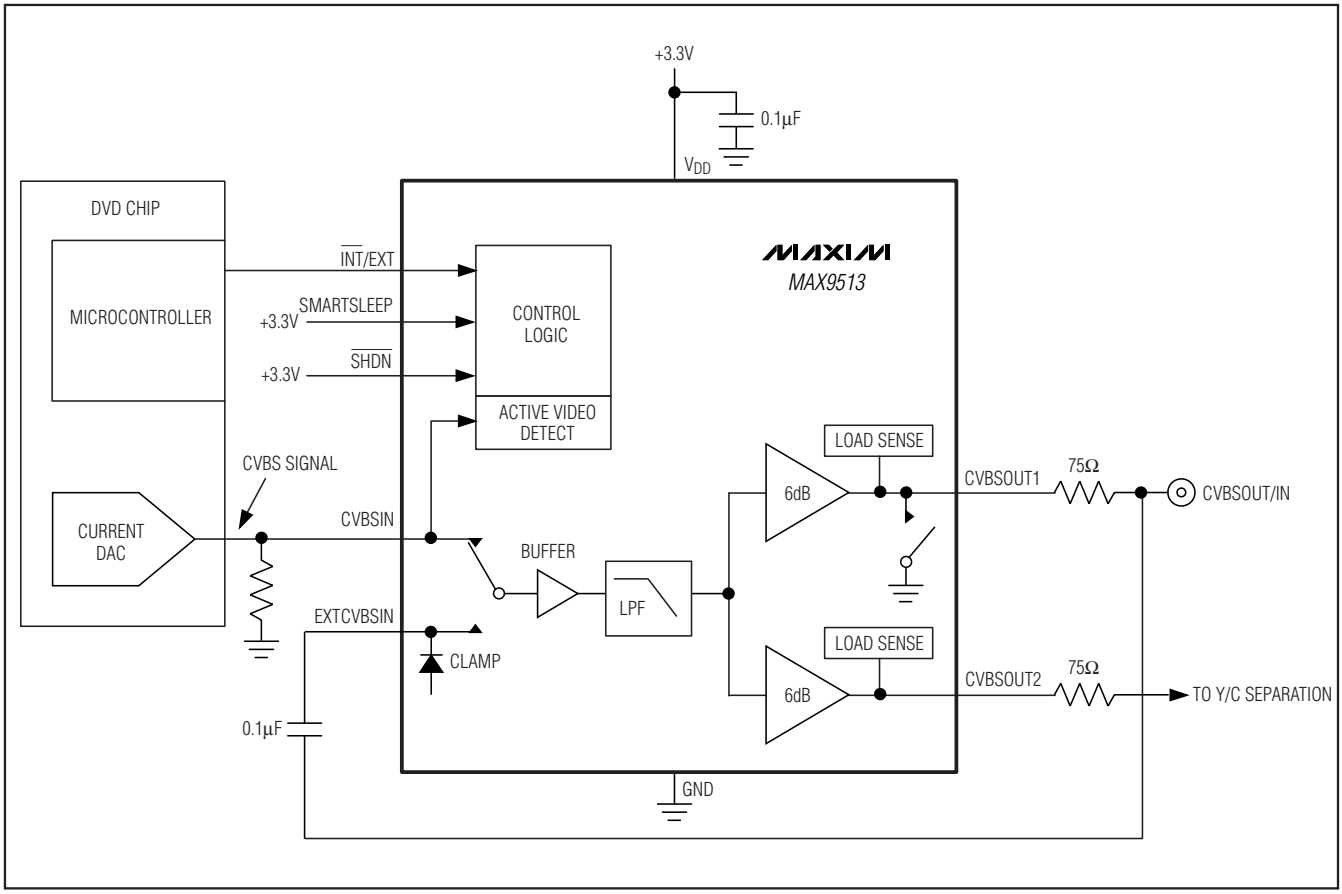


*Figure 1. Typical Application Circuit for Portable DVD Player*

## Detailed Description

In the typical application circuit shown in Figure 1, the current DAC generates an internal video signal. When the internal signal source is selected, the MAX9513 filters the signal and then drives the video connectors through a 75Ω back termination resistor. When the external video source is selected, the MAX9513 selects the external video signal (EXTCVBSIN), then clamps, filters, and amplifies it. The output stage of the amplifier connected to CVBSOUT1 becomes high impedance. The n-channel switch at CVBSOUT1 turns on, thereby converting the back termination resistor into an input termination resistor.

### SmartSleep Feature

The SmartSleep feature is activated when the SMARTSLEEP input is connected to logic-high. The SmartSleep feature provides intelligent power management by selectively disabling the filters and output amplifiers based on the presence of video signals or loads attached to the outputs. If the SmartSleep feature is not activated and the part is not in shutdown, the filters and output amplifiers completely turn on, regardless of whether there is a video signal at the CVBSIN input and whether there are loads connected at the outputs. SmartSleep only works with DC-coupled loads.

### Standby Mode

In standby mode, the filter and output amplifiers are off, and only the active video detect circuit is operational. Quiescent current consumption is approximately 7µA (Figure 2). The active video detect circuit checks whether sync is present on the CVBSIN signal. If no sync is detected, the device remains in standby mode.

### Active-Detect Mode

The active video detect circuit slices the CVBSIN signal at 4.7% of the power supply (155mV for a 3.3V supply). If the transitions occur at a rate of 14.3kHz or higher, a video signal is present. When the MAX9513 detects a video signal with sync at the CVBSIN input, the control logic enters the active-detect mode and enables the load-sense circuitry (Figure 3). The supply current is typically 17µA.

If an output load is not connected to any amplifier, the MAX9513 remains in active-detect mode. Eight times per second, each load-sense circuit checks for a load by connecting an internal 15kΩ pullup resistor to the output for 1ms. If the output is pulled up, no load is present. If the output stays low, a load is connected.

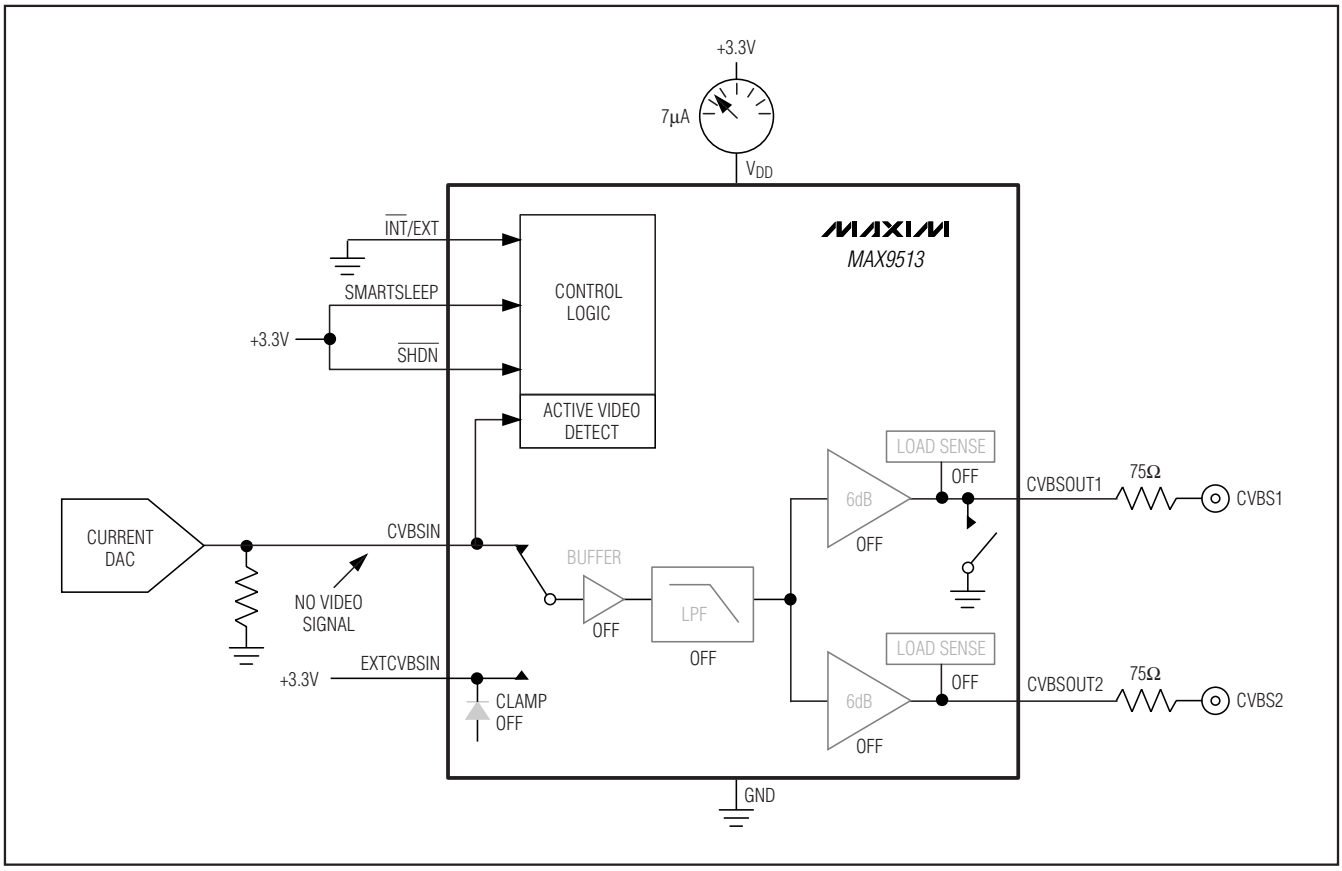


*Figure 2. Standby Mode*

# CVBS Video Filter Amplifier with SmartSleep and Bidirectional Video Support

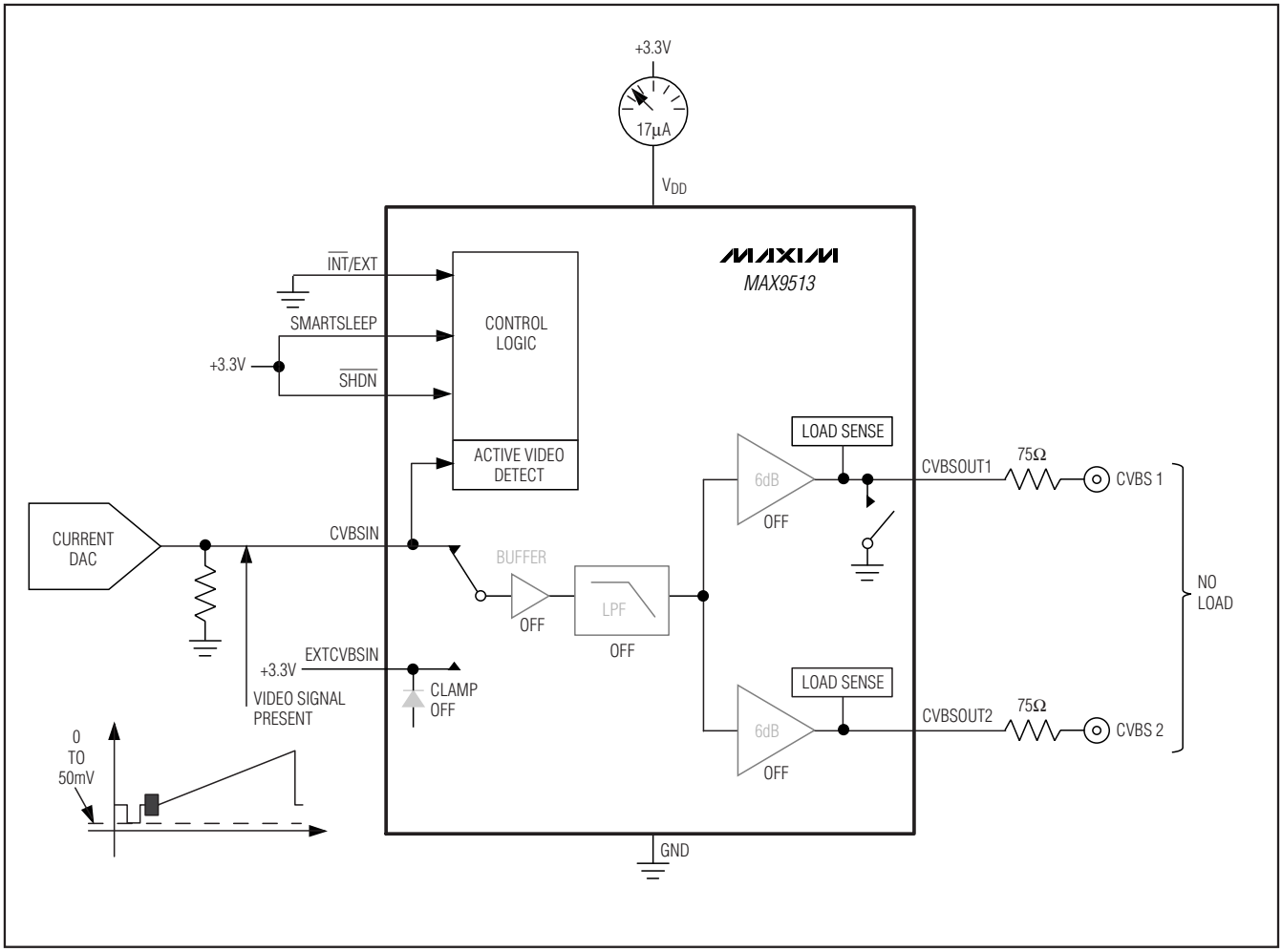


*Figure 3. Active-Detect Mode with No Output Loads*

### *Full-Operation Mode*

If a load is connected to an output, the corresponding filter and amplifier turn on and remain on until the output load is disconnected. In full-operation mode, SmartSleep intelligently reduces the supply current based on the input signal presence and output loading. Figures 4, 5, and 6 show which portions of the MAX9513 turn on and which remain off with different load configurations.

When an amplifier is on, it continually checks if the load has been disconnected by detecting if the amplifier output is sourcing current during a horizontal line time. If no sourcing current is detected within one horizontal line time (approximately 64µs), the load has been disconnected and the amplifier returns to active-detect mode. If, at any time, the input video signal is removed, the MAX9513 returns to standby mode.

If the SmartSleep feature is not activated and the part is not in shutdown, the filters and amplifiers completely turn on, regardless of whether there is a video signal at the CVBSIN input and whether there are loads connected at the outputs.

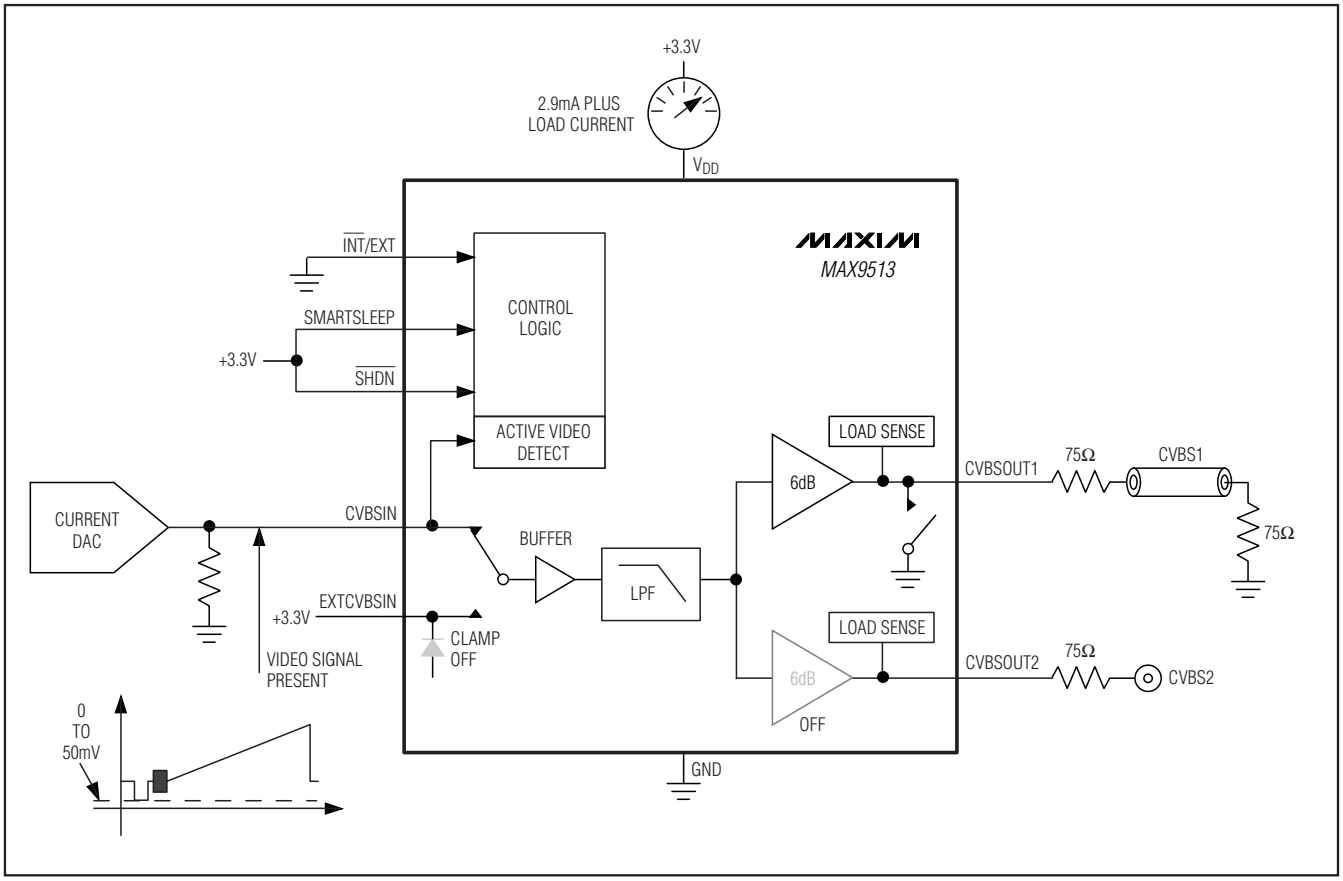


*Figure 4. Full-Operation Mode with CVBSOUT1 Loaded*

# CVBS Video Filter Amplifier with SmartSleep and Bidirectional Video Support

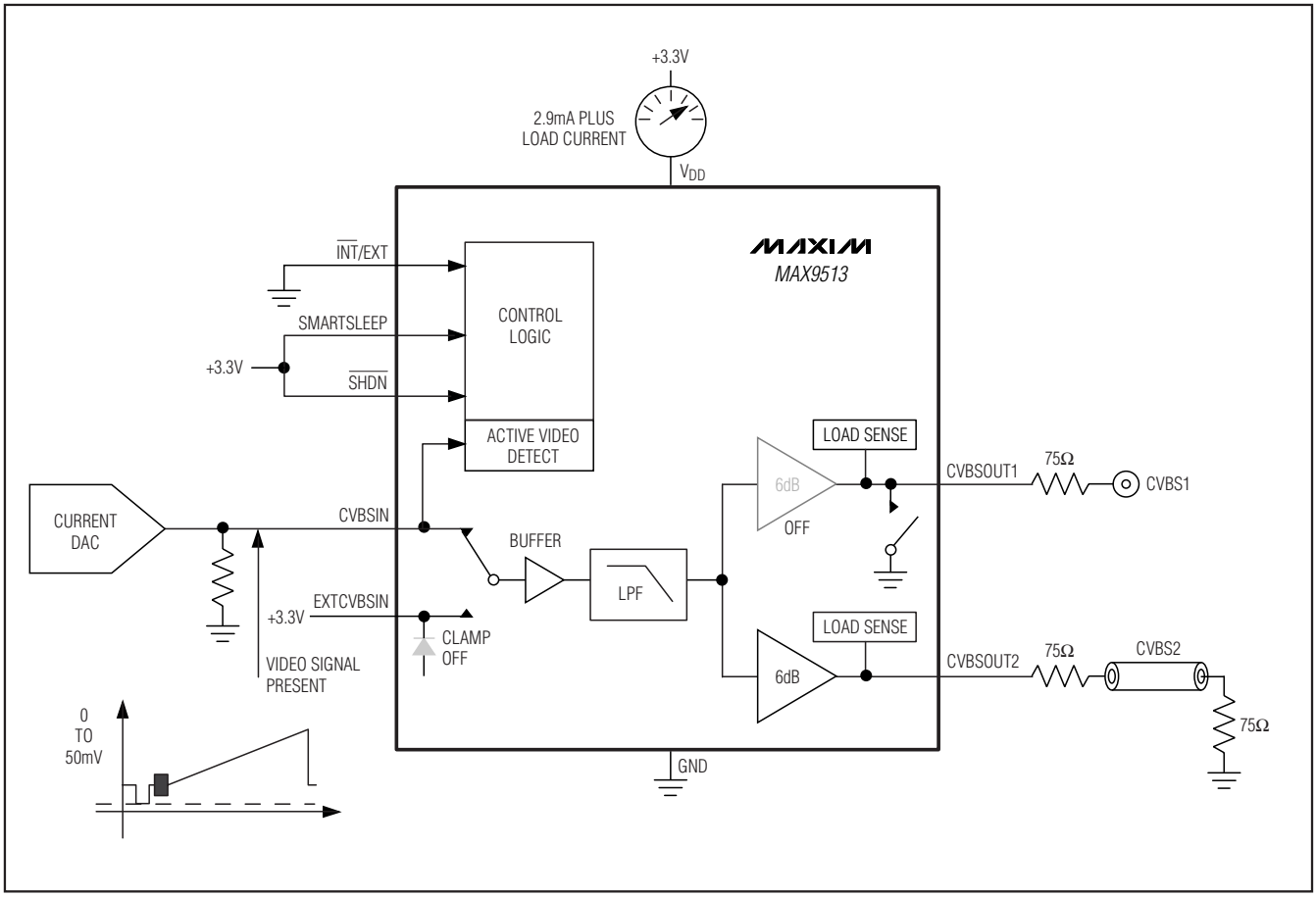


*Figure 5. Full-Operation Mode with CVBSOUT2 Loaded*

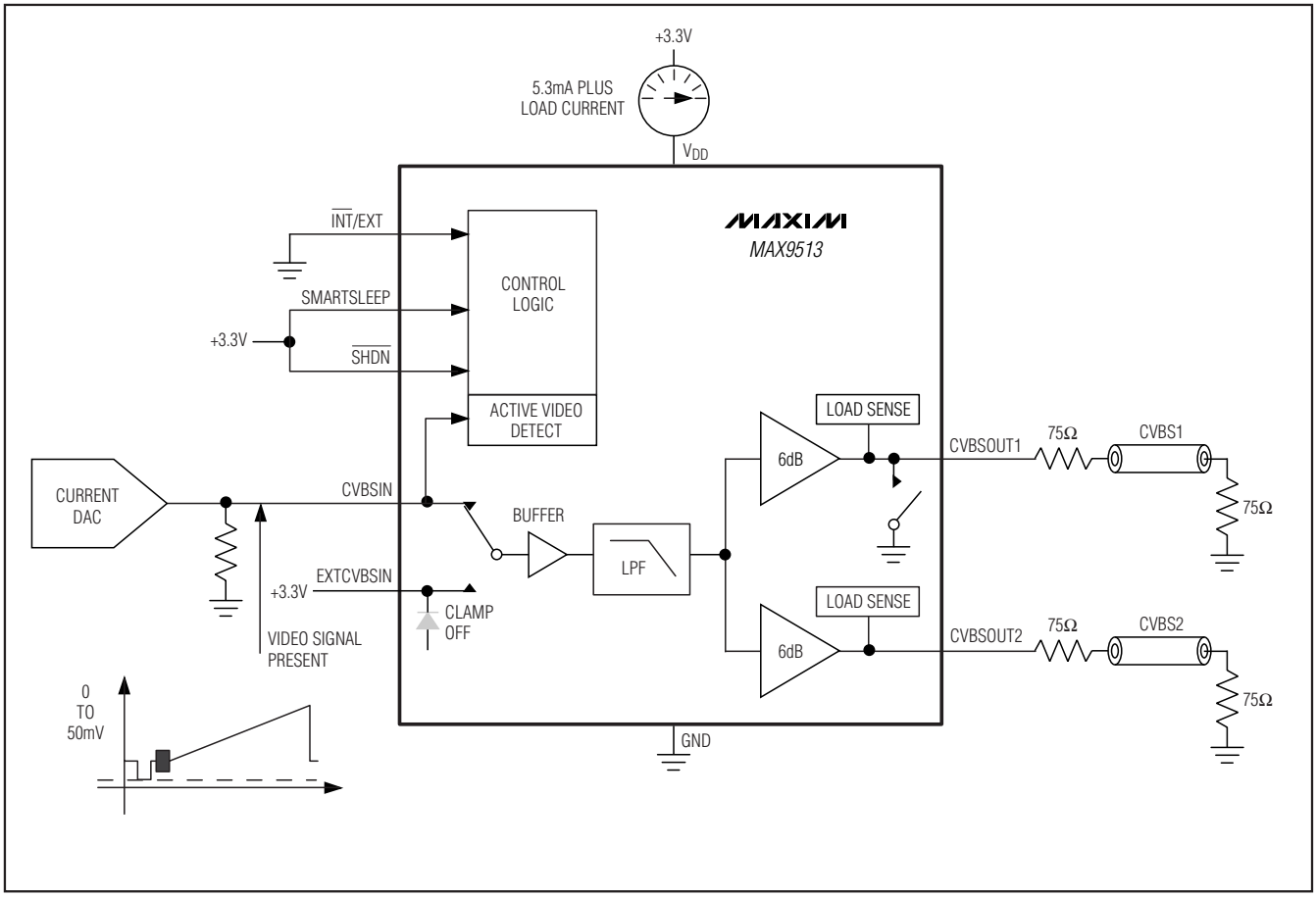


*Figure 6. Full-Operation Mode with Both Outputs Loaded*

# CVBS Video Filter Amplifier with SmartSleep and Bidirectional Video Support

### Internal Mode Versus External Mode

#### Internal Mode

Set the $\overline{INT}$/EXT control input low for internal mode. The MAX9513 processes video signals from an internal source such as a DVD chip (Figure 7). The 2:1 multiplexer selects the video signal on CVBSIN. The EXTCVBSIN video signal is ignored.

#### External Mode

Set the $\overline{INT}$/EXT control input high for external mode. The 2:1 multiplexer selects the video signal on EXTCVBSIN (Figure 8). The CVBSIN signal is ignored. The block drawing of the MAX9513 in Figure 8 shows which circuits are off while in external mode. SmartSleep does not function in external mode, and the SMARTSLEEP input is ignored.

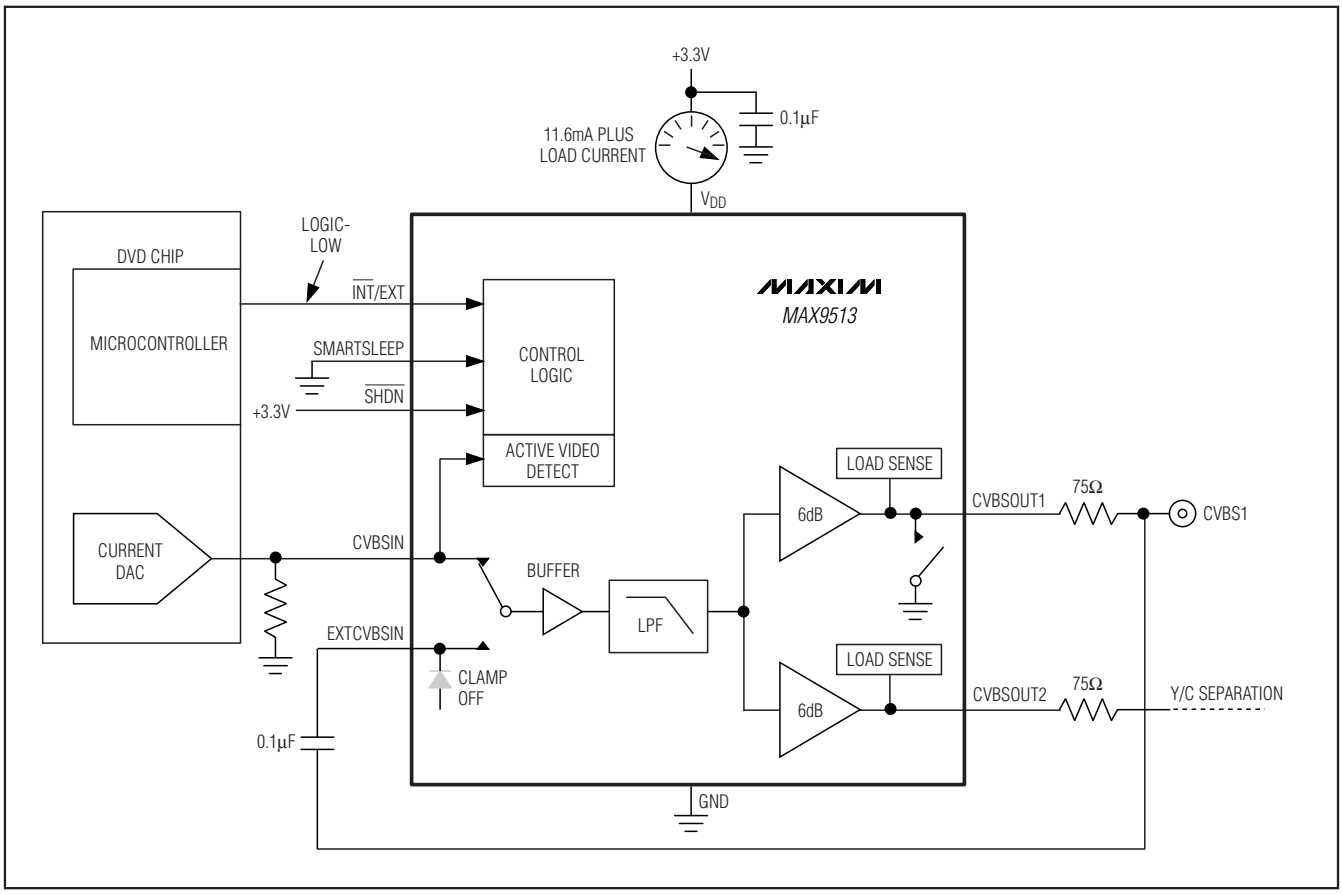


*Figure 7. Internal Mode Operation for Portable DVD Application*

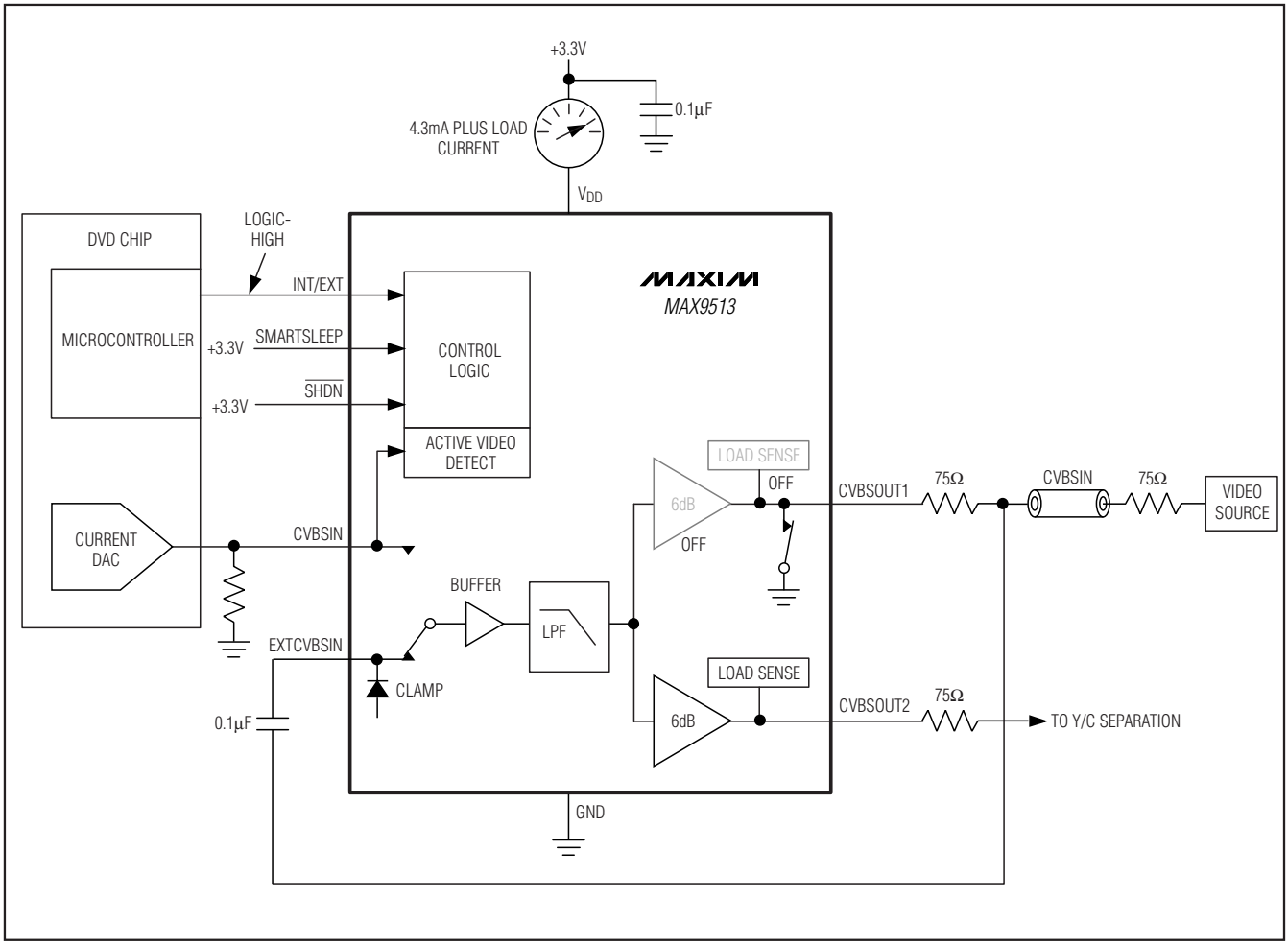


*Figure 8. External Mode Operation for Portable DVD Application*

# CVBS Video Filter Amplifier with SmartSleep and Bidirectional Video Support

### Inputs

The MAX9513 CVBSIN input should be directly connected to the output of the video current DAC. DC-coupling ensures that the input signals are ground referenced such that the sync tip of CVBSIN is within 50mV of ground.

The EXTCVBSIN input can only handle signals with a sync pulse, such as composite video and luma. Because the DC level of an external video input signal is unknown, the external video signal is AC-coupled through a 0.1µF capacitor, and a sync tip clamp sets the internal DC level of the MAX9513. A 2:1 multiplexer under the control of the $\overline{INT}$/EXT input selects either the signal at CVBSIN or EXTCVBSIN.

### Video Reconstruction Filter

The MAX9513 filter passband is 6.75MHz, which makes the device suitable for the higher bandwidth video signals from a DVD chip. Broadcast video signals actually require less bandwidth because of channel limitations: NTSC signals have a 4.2MHz bandwidth, and PAL signals have a 5MHz bandwidth. Video signals from a DVD player are not channel limited; therefore, the bandwidth of DVD video signals can push right against the Nyquist limit of 6.75MHz. (Recommendation ITU-R BT.601-5 specifies 13.5MHz as the sampling rate for standard-definition video). Therefore, the maximum bandwidth of the signal is 6.75MHz. To reduce the filtering requirements, most modern video systems oversample the input by two times, thus clocking the video current DAC at 27MHz.

### Outputs

The video output amplifiers can both source and sink load current, allowing output loads to be DC- or AC-coupled. The amplifier output stage needs approximately 300mV of headroom from either supply rail. The MAX9513 has an internal level-shift circuit that positions the sync tip at approximately 300mV at the output.

If the supply voltage is greater than 3.135V (5% below a 3.3V supply), each amplifier can drive two DC-coupled video loads to ground. If the supply is less than 3.135V, each amplifier can drive only one DC-coupled or AC-coupled video load.

### Shutdown

When $\overline{SHDN}$ is low, the MAX9513 typically draws less than 10nA supply current. All the amplifier outputs become high impedance. The effective output resistance at the video outputs is 28kΩ, due to the internal feedback resistors to ground.

## Applications Information

### Reducing Power Consumption in the Video DACs

CVBSIN has a high-impedance input buffer and can work with source resistances as high as 300Ω. To reduce power dissipation in the video DACs, the DAC output resistor can be scaled up in value. The reference resistor that sets the reference current inside the video DACs must also be similarly scaled up. For instance, if the output resistor is 37.5Ω, the DAC must source 26.7mA when the output is 1V. If the output resistor is increased to 300Ω, the DAC only needs to source 3.33mA when the output is 1V.

There is parasitic capacitance from the DAC output to ground. That capacitance in parallel with the DAC output resistor forms a pole that can potentially roll off the frequency response of the video signal. For example, 300Ω in parallel with 50pF creates a pole at 10.6MHz. To minimize this capacitance, reduce the area of the signal trace attached to the DAC output as much as possible, and place the MAX9513 as close to the video DAC outputs as possible.

### AC-Coupling the Outputs

The outputs can be AC-coupled since the output stage can source and sink current as shown in Figure 9. Coupling capacitors should be 220µF or greater to keep the highpass filter formed by the 150Ω equivalent resistance of the video transmission line to a corner frequency of 4.8Hz or below. The frame rate of PAL systems is 25Hz, and the frame rate of NTSC systems is 30Hz. The corner frequency should be well below the frame rate. SmartSleep only works with DC-coupled loads.

### Power-Supply Bypassing and Ground

The MAX9513 operates from a single-supply voltage down to 2.7V, allowing for low-power operation. Bypass $V_{DD}$ to GND with a 0.1µF capacitor. Place all external components as close as possible to the device.

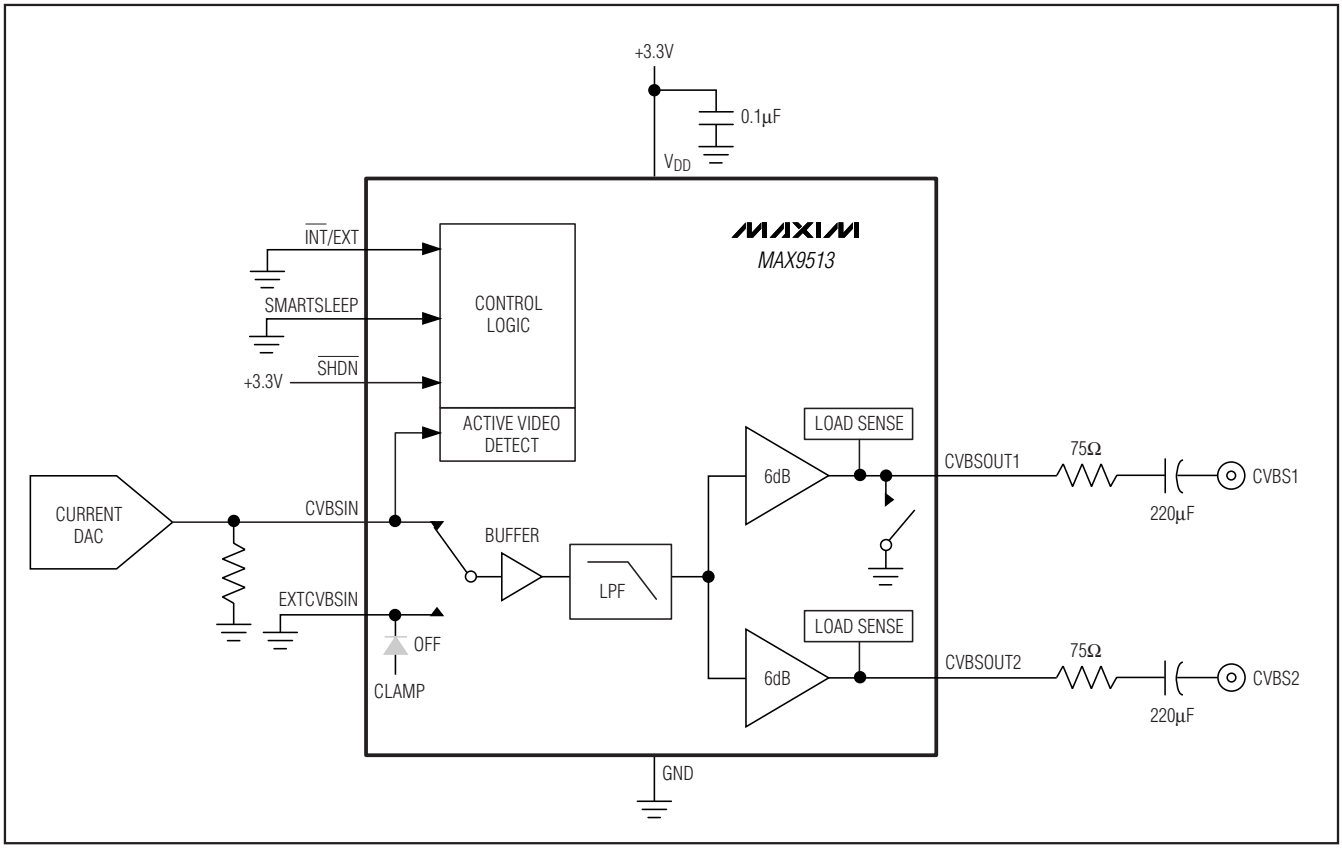


*Figure 9. AC-Coupled Outputs*

# CVBS Video Filter Amplifier with SmartSleep and Bidirectional Video Support

## Pin Configuration

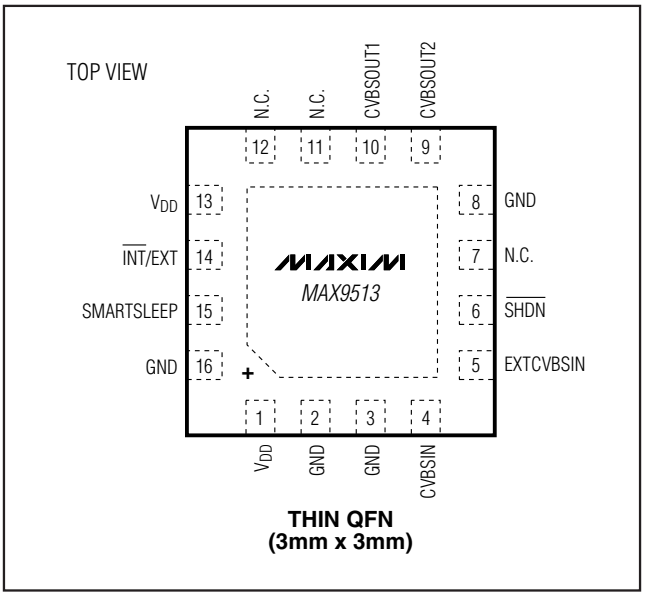


## Block Diagrams (continued)

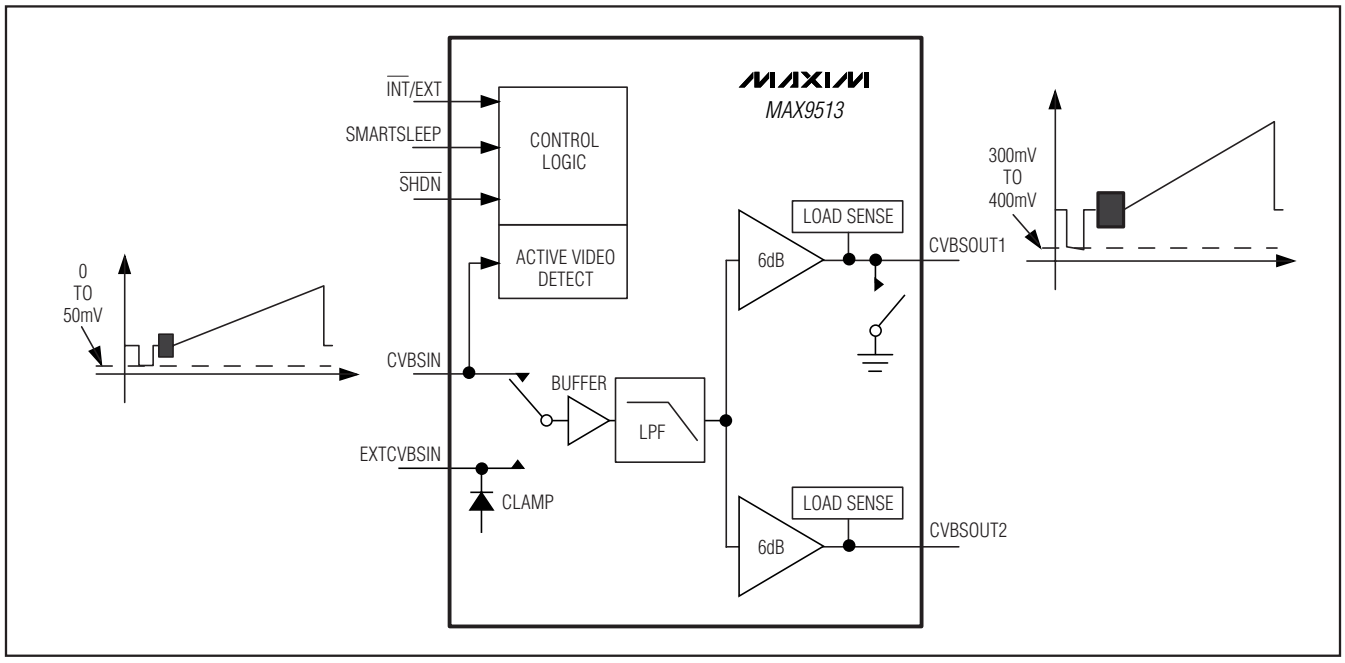


## Chip Information

PROCESS: BiCMOS

## Package Information

For the latest package outline information and land patterns, go to **www.maxim-ic.com/packages**.

| PACKAGE TYPE | PACKAGE CODE | DOCUMENT NO. |
|---|---|---|
| 16 TQFN-EP | T1633-4 | **21-0136** |

12x16L QFN THIN.EPS

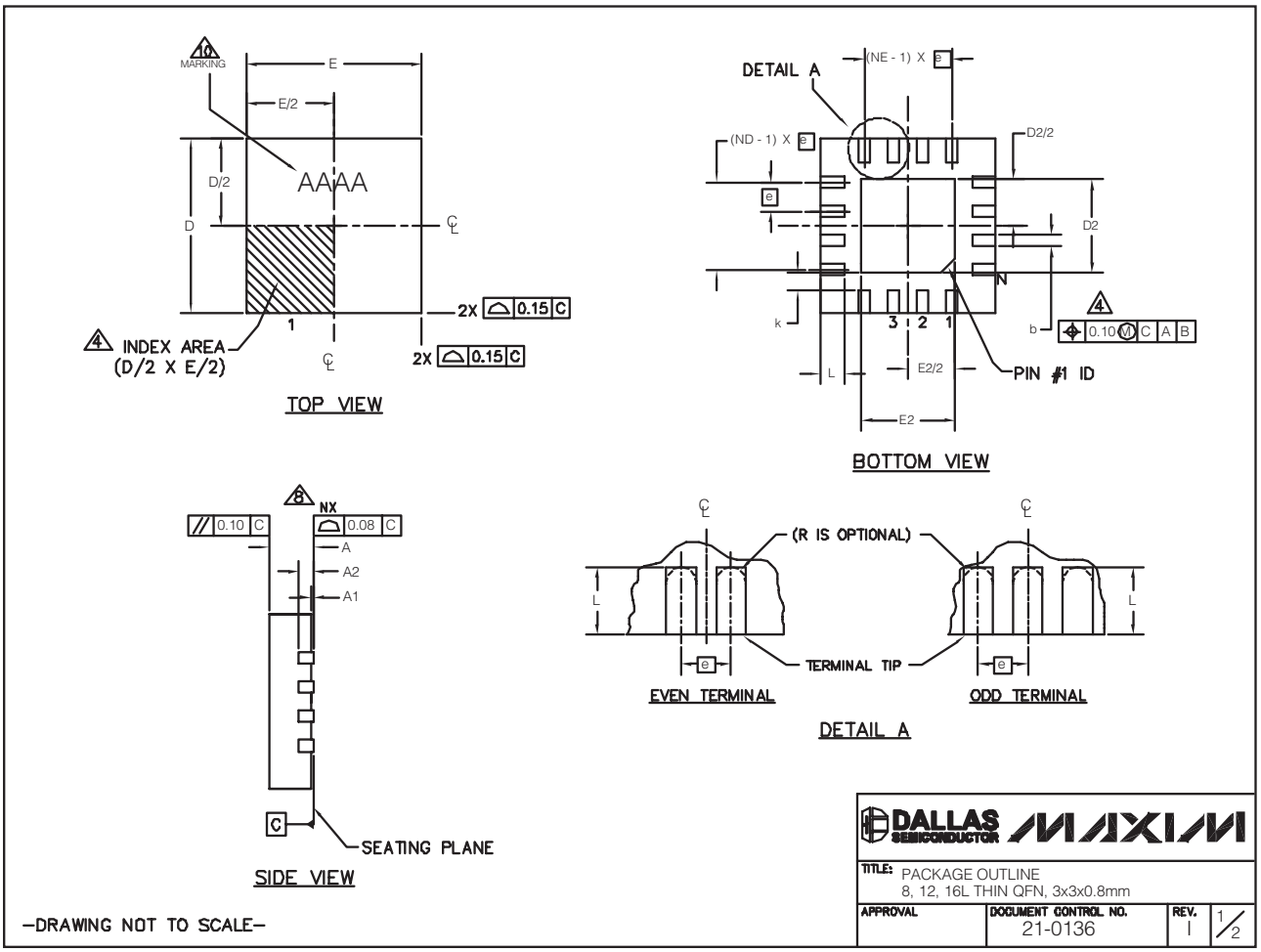

# CVBS Video Filter Amplifier with SmartSleep and Bidirectional Video Support

## Package Information (continued)

For the latest package outline information and land patterns, go to **www.maxim-ic.com/packages**.

| PKG | 8L 3x3 | | | 12L 3x3 | | | 16L 3x3 | | |
|---|---|---|---|---|---|---|---|---|---|
| REF. | MIN. | NOM. | MAX. | MIN. | NOM. | MAX. | MIN. | NOM. | MAX. |
| A | 0.70 | 0.75 | 0.80 | 0.70 | 0.75 | 0.80 | 0.70 | 0.75 | 0.80 |
| b | 0.25 | 0.30 | 0.35 | 0.20 | 0.25 | 0.30 | 0.20 | 0.25 | 0.30 |
| D | 2.90 | 3.00 | 3.10 | 2.90 | 3.00 | 3.10 | 2.90 | 3.00 | 3.10 |
| E | 2.90 | 3.00 | 3.10 | 2.90 | 3.00 | 3.10 | 2.90 | 3.00 | 3.10 |
| e | 0.65 BSC. | | | 0.50 BSC. | | | 0.50 BSC. | | |
| L | 0.35 | 0.55 | 0.75 | 0.45 | 0.55 | 0.65 | 0.30 | 0.40 | 0.50 |
| N | 8 | | | 12 | | | 16 | | |
| ND | 2 | | | 3 | | | 4 | | |
| NE | 2 | | | 3 | | | 4 | | |
| A1 | 0 | 0.02 | 0.05 | 0 | 0.02 | 0.05 | 0 | 0.02 | 0.05 |
| A2 | 0.20 REF | | | 0.20 REF | | | 0.20 REF | | |
| k | 0.25 | - | - | 0.25 | - | - | 0.25 | - | - |

| EXPOSED PAD VARIATIONS | | | | | | | | |
|---|---|---|---|---|---|---|---|---|
| PKG. CODES | D2 | | | E2 | | | PIN ID | JEDEC |
| | MIN. | NOM. | MAX. | MIN. | NOM. | MAX. | | |
| TQ833-1 | 0.25 | 0.70 | 1.25 | 0.25 | 0.70 | 1.25 | 0.35 x 45° | WEEC |
| T1233-1 | 0.95 | 1.10 | 1.25 | 0.95 | 1.10 | 1.25 | 0.35 x 45° | WEED-1 |
| T1233-3 | 0.95 | 1.10 | 1.25 | 0.95 | 1.10 | 1.25 | 0.35 x 45° | WEED-1 |
| T1233-4 | 0.95 | 1.10 | 1.25 | 0.95 | 1.10 | 1.25 | 0.35 x 45° | WEED-1 |
| T1633-2 | 0.95 | 1.10 | 1.25 | 0.95 | 1.10 | 1.25 | 0.35 x 45° | WEED-2 |
| T1633F-3 | 0.65 | 0.80 | 0.95 | 0.65 | 0.80 | 0.95 | 0.225 x 45° | WEED-2 |
| T1633FH-3 | 0.65 | 0.80 | 0.95 | 0.65 | 0.80 | 0.95 | 0.225 x 45° | WEED-2 |
| T1633-4 | 0.95 | 1.10 | 1.25 | 0.95 | 1.10 | 1.25 | 0.35 x 45° | WEED-2 |
| T1633-5 | 0.95 | 1.10 | 1.25 | 0.95 | 1.10 | 1.25 | 0.35 x 45° | WEED-2 |

NOTES:

1. DIMENSIONING & TOLERANCING CONFORM TO ASME Y14.5M-1994.
2. ALL DIMENSIONS ARE IN MILLIMETERS. ANGLES ARE IN DEGREES.
3. N IS THE TOTAL NUMBER OF TERMINALS.
4. THE TERMINAL #1 IDENTIFIER AND TERMINAL NUMBERING CONVENTION SHALL CONFORM TO JESD 95-1 SPP-012. DETAILS OF TERMINAL #1 IDENTIFIER ARE OPTIONAL, BUT MUST BE LOCATED WITHIN THE ZONE INDICATED. THE TERMINAL #1 IDENTIFIER MAY BE EITHER A MOLD OR MARKED FEATURE.
5. DIMENSION b APPLIES TO METALLIZED TERMINAL AND IS MEASURED BETWEEN 0.20 mm AND 0.25 mm FROM TERMINAL TIP.
6. ND AND NE REFER TO THE NUMBER OF TERMINALS ON EACH D AND E SIDE RESPECTIVELY.
7. DEPOPULATION IS POSSIBLE IN A SYMMETRICAL FASHION.
8. COPLANARITY APPLIES TO THE EXPOSED HEAT SINK SLUG AS WELL AS THE TERMINALS .
9. DRAWING CONFORMS TO JEDEC MO220 REVISION C.
10. MARKING IS FOR PACKAGE ORIENTATION REFERENCE ONLY.
11. NUMBER OF LEADS SHOWN ARE FOR REFERENCE ONLY.
12. WARPAGE NOT TO EXCEED 0.10mm.

–DRAWING NOT TO SCALE–

DALLAS SEMICONDUCTOR MAXIM

| TITLE: PACKAGE OUTLINE 8, 12, 16L THIN QFN, 3x3x0.8mm | | | |
|---|---|---|---|
| APPROVAL | DOCUMENT CONTROL NO. 21-0136 | REV. I | 2/2 |

# CVBS Video Filter Amplifier with SmartSleep and Bidirectional Video Support

## Revision History

| REVISION NUMBER | REVISION DATE | DESCRIPTION | PAGES CHANGED |
|---|---|---|---|
| 0 | 7/06 | Initial release | — |
| 1 | 2/09 | Removed QSOP package | 1, 2, 9, 20 |

*Maxim cannot assume responsibility for use of any circuitry other than circuitry entirely embodied in a Maxim product. No circuit patent licenses are implied. Maxim reserves the right to change the circuitry and specifications without notice at any time.*



© 2009 Maxim Integrated Products Maxim is a registered trademark of Maxim Integrated Products, Inc.