19-3688; Rev 3; 6/08

EVALUATION KIT AVAILABLE

1x/1.5x/2x White LED Charge Pump with Two LDOs in 4mm x 4mm Thin QFN

General Description

The MAX8631X/Y charge pump drives up to eight white LEDs with regulated constant current for uniform intensity. The main group of LEDs (M1–M4) can be driven up to 30mA per LED for backlighting. The flash group of LEDs (F1–F4) is independently controlled and can be driven up to 100mA per LED (or 400mA total). Two 200mA LDOs are on-board to provide power for camera functions. The LDOs' output voltages are pin-programmable to meet different camera-module requirements. By utilizing adaptive 1x/1.5x/2x charge-pump modes and very-low-dropout current regulators, the MAX8631X/Y achieves high efficiency over the full 1-cell lithium-battery voltage range. The 1MHz fixed-frequency switching allows for tiny external components, and the regulation scheme is optimized to ensure low EMI and low input ripple.

The MAX8631X/Y is available in a 28-pin thin QFN, 4mm x 4mm lead-free package (0.8mm max height).

Applications

Camera Phones and Smartphones

Backlighting and Flash

PDAs, Digital Cameras, and Camcorders

Features

- **Powers Up to 8 LEDs**
  - **Up to 30mA/LED Drive for Backlight**
  - **Up to 400mA Total Drive for Flash**
- **Two Internal Low-Noise 200mA LDOs**
- **94% Max/85% Avg Efficiency (P_{LED}/P_{BATT}) over Li+ Battery Discharge**
- **0.2% Typical LED Current Matching**
- **Adaptive 1x/1.5x/2x Mode Switchover**
- **Single-Wire Serial Pulse Interface for Brightness Control (32 Steps)**
- **Thermal T_A Derating Function**
- **Low Input Ripple and EMI**
- **2.7V to 5.5V Supply Voltage Range**
- **Soft-Start, Overvoltage, and Thermal-Shutdown Protection**
- **28-Pin Thin QFN, 4mm x 4mm Package**

Typical Operating Circuit

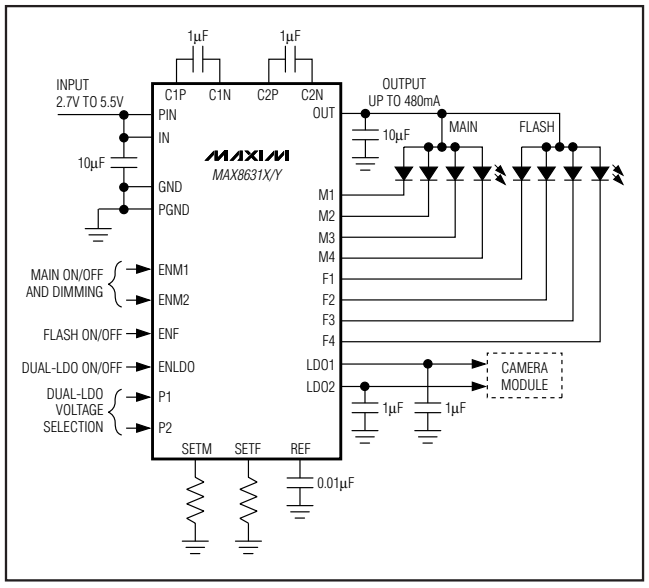

Ordering Information

PART	TEMP RANGE	PIN-PACKAGE
MAX8631XETI+	-40°C to +85°C	28 Thin QFN-EP* 4mm x 4mm (T2844-1)
MAX8631YETI+	-40°C to +85°C	28 Thin QFN-EP* 4mm x 4mm (T2844-1)

*EP = Exposed pad.
+Denotes a lead-free package.

Pin Configuration appears at end of data sheet.

For pricing, delivery, and ordering information, please contact Maxim/Dallas Direct! at 1-888-629-4642, or visit Maxim's website at www.maxim-ic.com.

1x/1.5x/2x White LED Charge Pump with Two LDOs in 4mm x 4mm Thin QFN

ABSOLUTE MAXIMUM RATINGS

PIN, IN, OUT, REFBP to GND.....-0.3V to +6.0V
SETF, SETM, ENLDO, ENM1, ENM2, ENF,
P1, P2, LDO1, LDO2 to GND.....-0.3V to (V_{IN} + 0.3V)
M1, M2, M3, M4, F1, F2, F3, F4 to GND...-0.3V to (V_{OUT} + 0.3V)
C1N, C2N to GND ..... -0.3V to (V_{IN} + 1V)
C1P, C2P
to GND..... -0.3V to greater of (V_{OUT} + 1V) or (V_{IN} + 1V)
PGND to GND .....-0.3V to +0.3V
OUT, LDO1, LDO2 Short-Circuit to GND .....Continuous

Continuous Power Dissipation (T_A = +70°C)
28-Pin Thin QFN 4mm X 4mm
(derate 20.8mW/°C above +70°C).....1666mW
Operating Temperature Range .....-40°C to +85°C
Junction Temperature.....+150°C
Storage Temperature Range .....-65°C to +150°C
Lead Temperature (soldering, 10s) .....+300°C

Stresses beyond those listed under "Absolute Maximum Ratings" may cause permanent damage to the device. These are stress ratings only, and functional operation of the device at these or any other conditions beyond those indicated in the operational sections of the specifications is not implied. Exposure to absolute maximum rating conditions for extended periods may affect device reliability.

ELECTRICAL CHARACTERISTICS

(V_{IN} = 3.6V, V_{GND} = V_{PGND} = 0V, ENM1 = ENM2 = ENF = IN, R_{SETM} = R_{SETF} = 6.8kΩ, P1 = P2 = unconnected, C_{REF} = 0.01µF, **T_A = -40°C to +85°C**, unless otherwise noted. Typical values are at T_A = +25°C.) (Note 1)

PARAMETER	CONDITIONS		MIN	TYP	MAX	UNITS
IN Operating Voltage			2.7		5.5	V
Undervoltage-Lockout Threshold	V_{IN} rising or falling		2.25	2.45	2.60	V
Undervoltage-Lockout Hysteresis				130		mV
Supply Current	1MHz switching, no load, 1.5x or 2x mode			4.0	5.5	mA
	1x mode 10% setting, ENF = GND, V_{ENLDO} = V_{IN}, I_{LDO1} = I_{LDO2} = 0A			0.4		mA
	ENM1 = ENM2 = ENF = GND, V_{ENLDO} = V_{IN}, I_{LDO1} = I_{LDO2} = 0A			110		µA
Shutdown Supply Current	ENM1 = ENM2 = ENF = ENLDO = GND	T_A = +25°C		0.01	5	µA
		T_A = +85°C		0.1		µA
EN_ High Voltage	V_{IN} = 2.7V to 5.5V		1.4			V
EN_ Low Voltage	V_{IN} = 2.7V to 5.5V				0.4	V
EN_ Input Current	$V_{EN_}$ = 0V or 5.5V	T_A = +25°C		0.01	1	µA
		T_A = +85°C		0.1		µA
ENM_ or ENF Low Shutdown Delay t_{SHDN}	See Figure 2		2.5			ms
ENM_ or ENF t_{LO}	See Figure 2		0.5		250.0	µs
ENM_ or ENF t_{HI}	See Figure 2		0.5			µs
Initial ENM_ or ENF t_{HI}	Only required for first ENM_ or ENF pulse, see Figure 2		200			µs
P1, P2 Shutdown Input Current				1		µA
P1, P2 Input Impedance				150		kΩ
Thermal-Shutdown Threshold	Temperature rising			+160		°C
Thermal-Shutdown Hysteresis				20		°C
CHARGE PUMP						
Overvoltage-Protection Threshold	V_{OUT} rising			5		V
Soft-Start Time				2		ms

ELECTRICAL CHARACTERISTICS (continued)

(V_{IN} = 3.6V, V_{GND} = V_{PGND} = 0V, ENM1 = ENM2 = ENF = IN, R_{SETM} = R_{SETF} = 6.8kΩ, P1 = P2 = unconnected, C_{REF} = 0.01µF, **T_A = -40°C to +85°C**, unless otherwise noted. Typical values are at T_A = +25°C.) (Note 1)

PARAMETER	CONDITIONS		MIN	TYP	MAX	UNITS
1x to 1.5x or 1.5x to 2x Mode Transition Threshold			90	100	110	mV
Input Voltage-Mode Transition Hysteresis				150		mV
Charge-Pump Maximum OUT Current	V_{IN} ≥ 3.15V, V_{OUT} = 3.9V		580			mA
Open-Loop OUT Resistance	1x mode, (V_{IN} - V_{OUT}) / I_{OUT}			0.3	1.0	Ω
	1.5x mode, (1.5V_{IN} - V_{OUT}) / I_{OUT}			1.1	4.0	
	2x mode, (2V_{IN} - V_{OUT}) / I_{OUT}			1.5	4.14	
Charge-Pump Short-Circuit Current	V_{OUT} < 1.25V			500		mA
Switching Frequency				1		MHz
OUT Pulldown Resistance in Shutdown	ENM_ = ENF = GND			5		kΩ
LED DRIVER						
SET_ Bias Voltage	T_A = +25°C			0.6		V
SET_ Leakage in Shutdown	ENM_ = ENF = GND	T_A = +25°C		0.01	1	µA
		T_A = +85°C		0.1		
SET_ Current Range			10		145	µA
SETM-to-Main LED Current Ratio ($I_{M_}/I_{SETM}$)	100% setting, M1–M4			230		A/A
SETF-to-Flash LED Current Ratio ($I_{F_}/I_{SETF}$)	100% setting, F1–F4			690		A/A
M_, F_ Current Accuracy	T_A = +25°C		-1.25		+1.25	%
	T_A = -40°C to current derating start temperature		-4		+4	
Maximum Main LED Sink Current	R_{SETM} = 4.6kΩ, for each M_			30		mA
Maximum Flash LED Sink Current	R_{SETF} = 4.12kΩ, I_{F1} + I_{F2} + I_{F3} + I_{F4}			400		mA
Current-Derating-Function Start Temperature				+40		°C
Current-Derating-Function Slope	T_A = +40°C to +85°C			-1.7		%/°C
Dropout Voltage	(Note 2)			40	90	mV
1.5x and 2x Regulation Voltage				150		mV
M_, F_ Leakage in Shutdown	ENM_ = ENF = GND	T_A = +25°C		0.01	1	µA
		T_A = +85°C		0.1		
LDO_						
Output Voltage Accuracy	$I_{LDO_}$ = 150mA, relative to $V_{OUT(NOM)}$ (Note 3)		-1.7	0	+1.7	%
Output Current Range			0		200	mA
Current Limit	$V_{LDO_}$ = 0V		280	475	750	mA
Soft-Start Current Limit				160		mA

1x/1.5x/2x White LED Charge Pump with Two LDOs in 4mm x 4mm Thin QFN

ELECTRICAL CHARACTERISTICS (continued)

(V_{IN} = 3.6V, V_{GND} = V_{PGND} = 0V, ENM1 = ENM2 = ENF = IN, R_{SETM} = R_{SETF} = 6.8kΩ, P1 = P2 = unconnected, C_{REF} = 0.01µF, **T_A = -40°C to +85°C**, unless otherwise noted. Typical values are at T_A = +25°C.) (Note 1)

PARAMETER	CONDITIONS	MIN	TYP	MAX	UNITS
Soft-Start Done Time			100		µs
Dropout Voltage	$I_{LDO_}$ = 200mA (Note 4)		120	320	mV
Load Regulation	V_{IN} = 3.7V, 100µA < $I_{LDO_}$ < 200mA			1.3	%
Power-Supply Rejection $\Delta V_{OUT}/\Delta V_{IN}$	10Hz to 10kHz, $C_{LDO_}$ = 1µF, $I_{LDO_}$ = 10µA		-60		dB
Output Noise Voltage (RMS)	10Hz to 100kHz, $C_{LDO_}$ = 1µF, $I_{LDO_}$ = 10mA		40		μV_{RMS}

Note 1: All devices are 100% production tested at T_A = +25°C. Limits over the operating temperature range are guaranteed by design.

Note 2: LED dropout voltage is defined as the M_ or F_ to GND voltage at which current into M_ or F_ drops 10% from the value at M_ or F_ = 0.2V.

Note 3: (Greater of 2.7V or ($V_{LDO_}$ + 0.5V)) ≤ V_{IN} ≤ 5.5V.

Note 4: LDO dropout voltage is defined as V_{IN} - V_{OUT} when V_{OUT} is 100mV below the value of V_{OUT} measured when V_{IN} = $V_{OUT(NOM)}$ + 1V. Since the minimum input voltage is 2.7V, this specification is only meaningful when $V_{OUT(NOM)}$ > 2.5V.

Typical Operating Characteristics

(V_{IN} = $V_{EN_}$ = 3.6V, circuit of Figure 1, T_A = +25°C, unless otherwise noted.)

EFFICIENCY vs. Li+ BATTERY VOLTAGE DRIVING FOUR MAIN LEDs

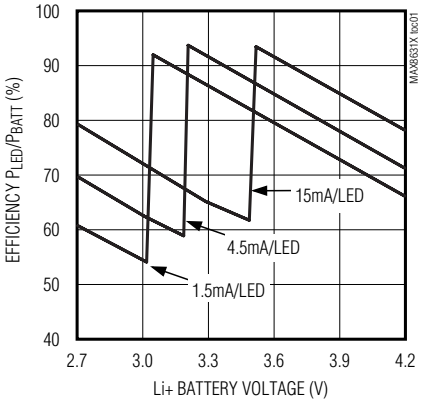

EFFICIENCY vs. Li+ BATTERY VOLTAGE DRIVING FLASH LED MODULE

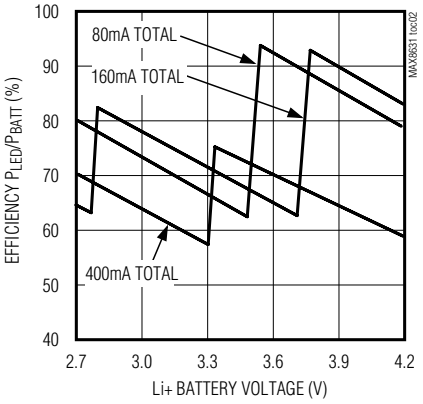

BATTERY CURRENT vs. SUPPLY VOLTAGE DRIVING FOUR MAIN LEDs

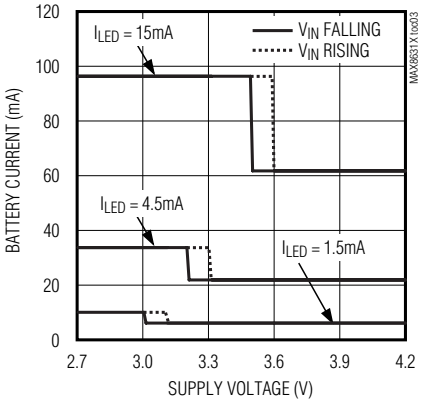

Typical Operating Characteristics (continued)

(V_{IN} = $V_{EN_}$ = 3.6V, circuit of Figure 1, T_A = +25°C, unless otherwise noted.)

BATTERY CURRENT vs. SUPPLY VOLTAGE DRIVING FLASH

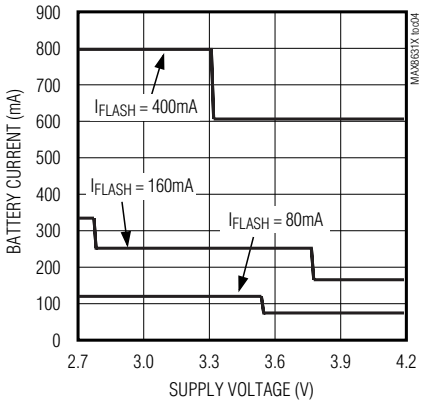

LDO GROUND PIN SUPPLY CURRENT vs. SUPPLY VOLTAGE

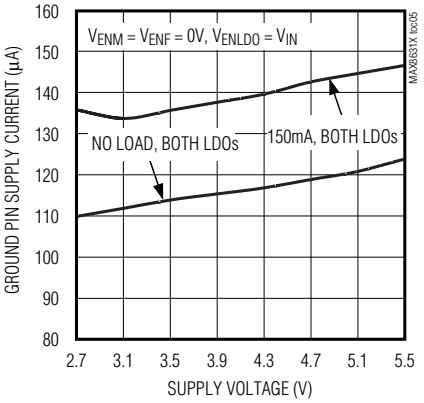

INPUT RIPPLE VOLTAGE vs. SUPPLY VOLTAGE WITH FOUR MAIN LEDs

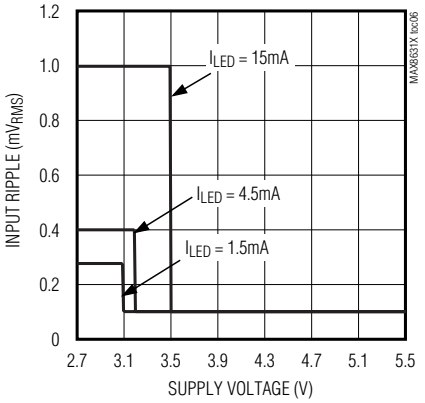

INPUT RIPPLE VOLTAGE vs. SUPPLY VOLTAGE WITH FLASH AND MAIN LEDs

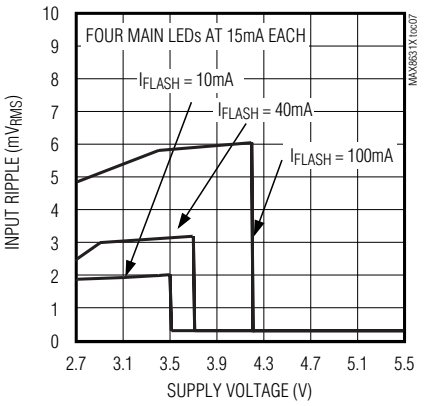

LED CURRENT MATCHING vs. SUPPLY VOLTAGE WITH FOUR MAIN LEDs

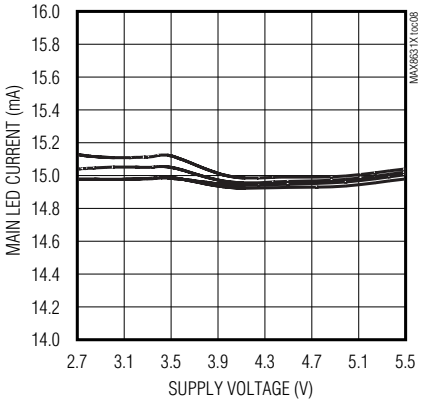

LED CURRENT MATCHING vs. SUPPLY VOLTAGE WITH FOUR FLASH LEDs

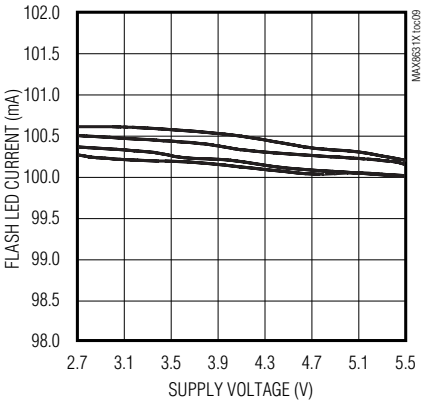

LED CURRENT vs. AMBIENT TEMPERATURE WITH FOUR MAIN LEDs

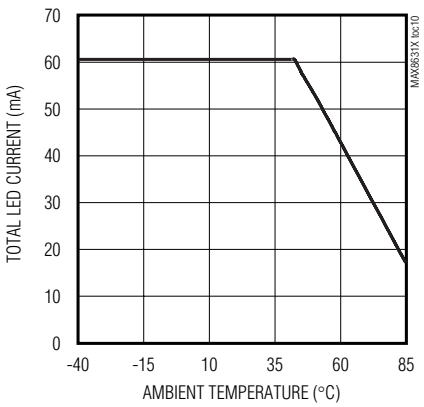

LED CURRENT vs. AMBIENT TEMPERATURE WITH FLASH

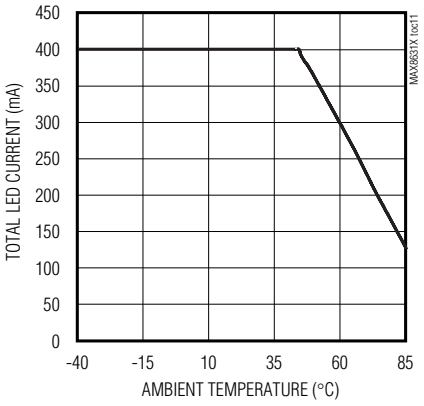

INDIVIDUAL MAIN LED CURRENT vs. R_{SETM}

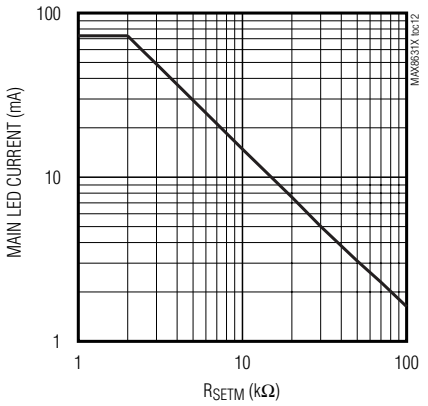

1x/1.5x/2x White LED Charge Pump with Two LDOs in 4mm x 4mm Thin QFN

Typical Operating Characteristics (continued)

(V_{IN} = $V_{EN_}$ = 3.6V, Circuit of Figure 1, T_A = +25°C, unless otherwise noted.)

INDIVIDUAL FLASH LED CURRENT vs. R_{SETF}

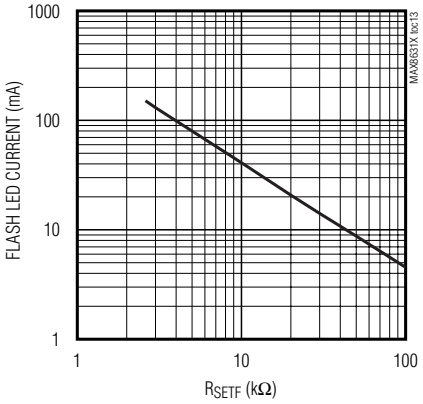

OPERATING WAVEFORMS (1x MODE)

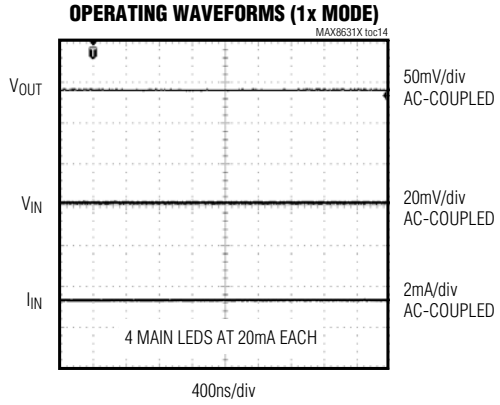

OPERATING WAVEFORMS (1.5x MODE)

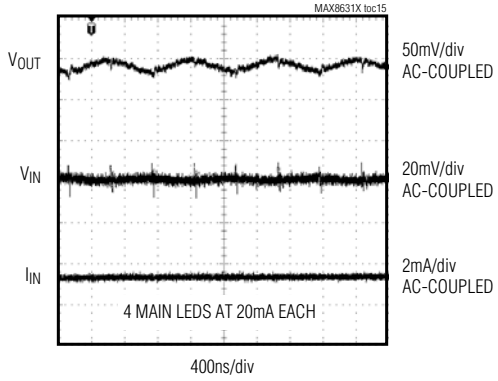

OPERATING WAVEFORMS (2x MODE)

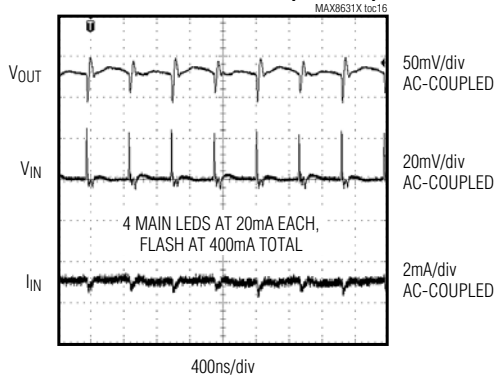

STARTUP AND SHUTDOWN MAIN LED RESPONSE

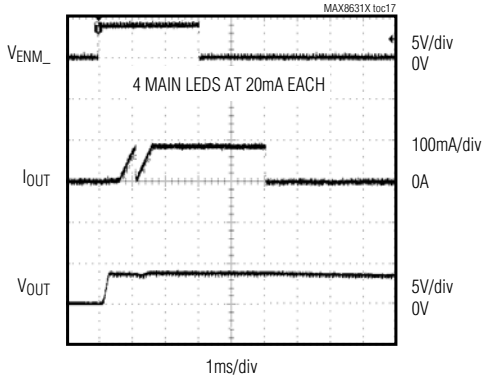

STARTUP AND SHUTDOWN FLASH LED RESPONSE

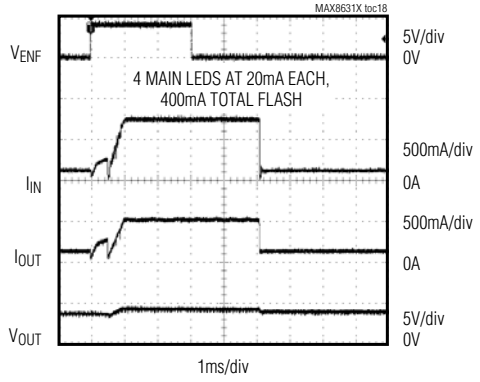

Typical Operating Characteristics (continued)

(V_{IN} = $V_{EN_}$ = 3.6V, circuit of Figure 1, T_A = +25°C, unless otherwise noted.)

SINGLE-WIRE DIMMING RESPONSE

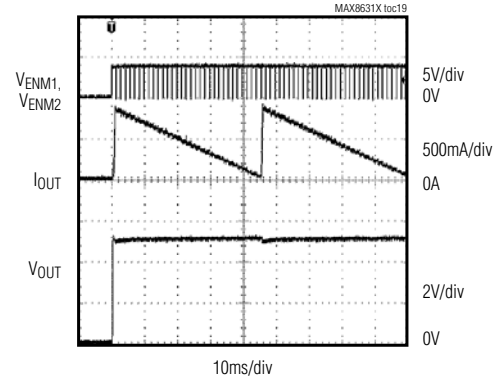

LDO DROPOUT VOLTAGE vs. OUTPUT CURRENT

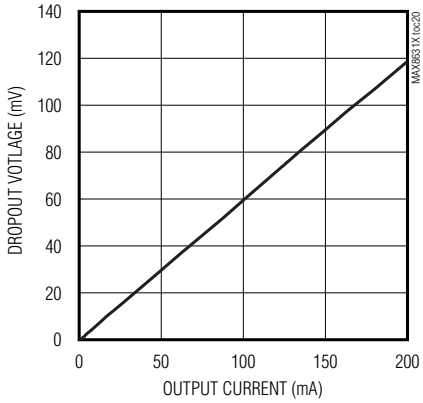

LDO OUTPUT VOLTAGE ACCURACY vs. OUTPUT CURRENT

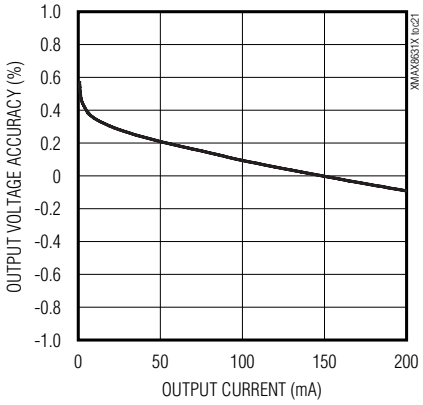

LOAD-TRANSIENT RESPONSE

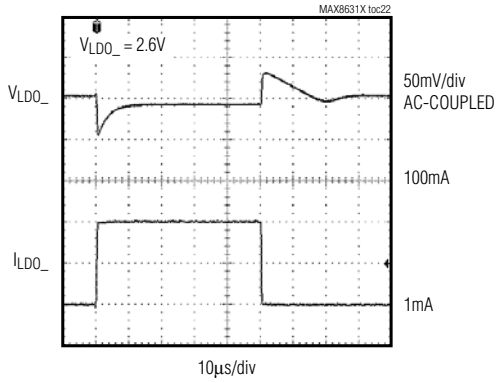

LOAD-TRANSIENT RESPONSE NEAR DROPOUT

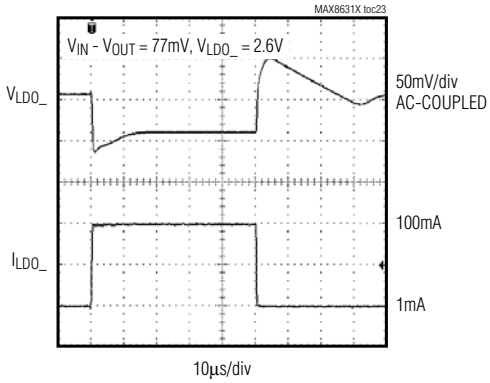

1x/1.5x/2x White LED Charge Pump with Two LDOs in 4mm x 4mm Thin QFN

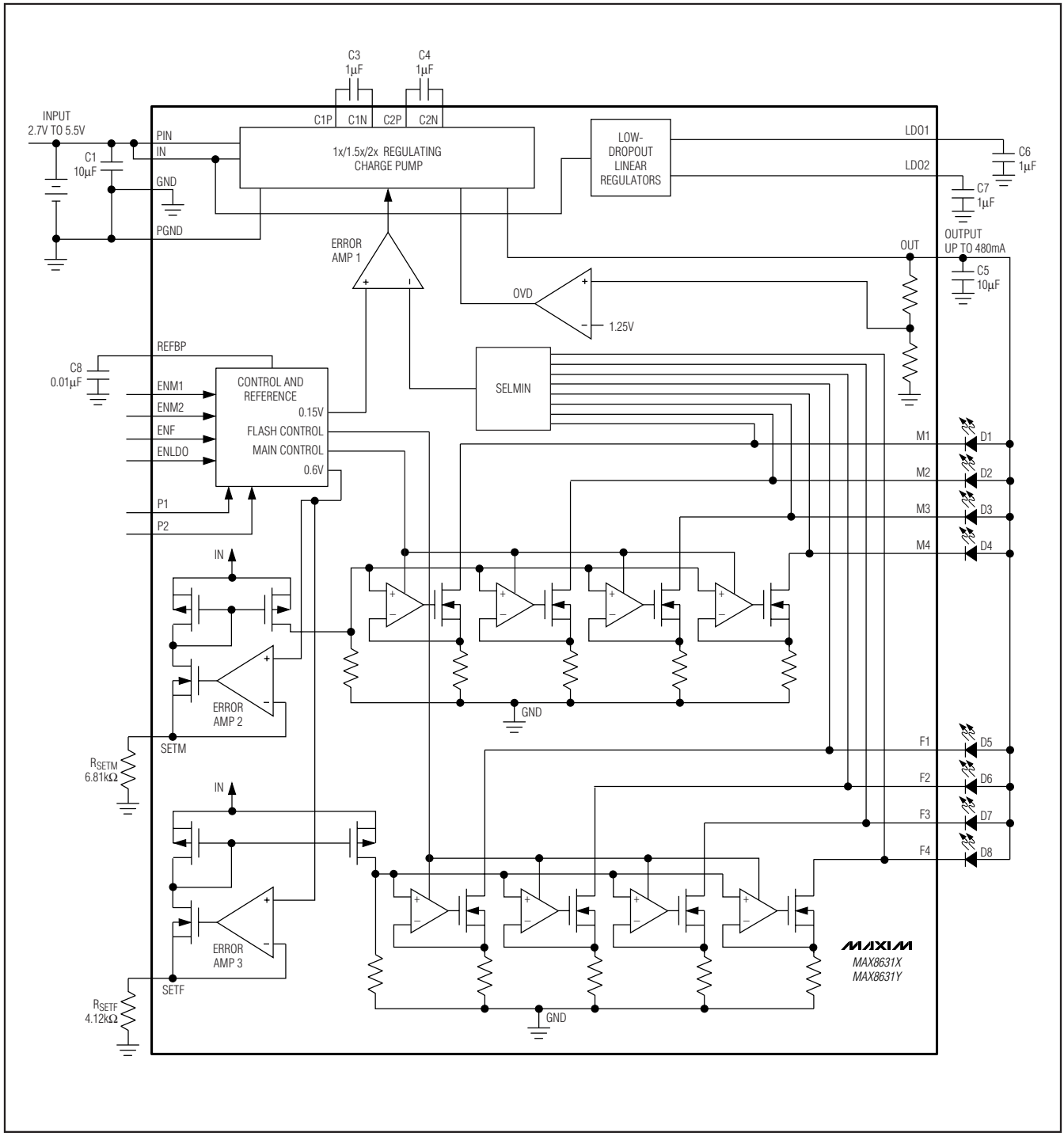

Figure 1. Functional Diagram and Application Circuit

Pin Description

PIN	NAME	FUNCTION
1	PIN	Supply Voltage Input. Bypass to PGND with a 10µF ceramic capacitor. The input voltage range is 2.7V to 5.5V. PIN is high impedance during shutdown.
2	IN	Chip Supply Voltage Input. Bypass to GND with a 10µF ceramic capacitor as close to the IC as possible. The input voltage range is 2.7V to 5.5V. IN is high impedance during shutdown.
3	GND	Ground. Connect GND to system ground and the input bypass capacitor as close to the IC as possible.
4	LDO1	LDO1 Output. Bypass with a 1µF ceramic capacitor to GND. LDO1 is pulled to ground through an internal 400kΩ during shutdown.
5	LDO2	LDO2 Output. Bypass with a 1µF ceramic capacitor to GND. LDO2 is pulled to ground through an internal 400kΩ during shutdown.
6	REFBP	Reference Filter. Bypass REFBP with a 0.01µF ceramic capacitor to GND.
7	SETF	Bias Current Set Input for F1–F4. The current flowing out of SETF sets the maximum (100%) bias current into each LED. V_{SETF} is internally biased to 0.6V. Connect a resistor (R_{SETF}) from SETF to GND to set the flash current. $R_{SETF} = 414 / I_{LED(MAX)}$. SETF is high impedance during shutdown.
8	SETM	Bias Current Set Input for M1–M4. The current flowing out of SETM sets the maximum (100%) bias current into each LED. V_{SETM} is internally biased to 0.6V. Connect a resistor (R_{SETM}) from SETM to GND to set the main LED current. $R_{SETM} = 138 / I_{LED(MAX)}$. SETM is high impedance during shutdown.
9–12	F4–F1	400mA Combined Current Flash LED Cathode Connection and Charge-Pump Feedback. Current flowing into F_ is based on I_{SETF} . The charge pump regulates the lowest F_ voltage to 0.15V. Grounding any F_ input forces OUT to operate at approximately 5V. Connect F_ to OUT if this LED is not populated.
13–16	M4–M1	30mA Main LED Cathode Connection and Charge-Pump Feedback. Current flowing into M_ is based on the EN_ configuration and I_{SETM}. The charge pump regulates the lowest M_ input voltage to 0.15V. Grounding any M_ forces OUT to operate at approximately 5V. Connect M_ to OUT if this LED is not populated.
17	P2	Default Output-Voltage Select Input. P1 and P2 set the LDO1 and LDO2 voltages to one of nine combinations (Table 2). P2 is high impedance in an off condition and shortly after an on condition.
18	ENLDO	LDO Output Enable. Drive to a logic-level high to turn on both LDOs. Drive to a logic-level low to turn off both LDOs.
19	ENM2	Enable and Dimming Control for M1–M4. Drive both ENM1 and ENM2 to a logic-level high to turn on the main LEDs. Drive both ENM1 and ENM2 to a logic-level low to turn off the main LEDs. The dimming technique is discussed in the *Applications Information* section.
20	ENM1	Enable and Dimming Control for M1–M4. Drive both ENM1 and ENM2 to a logic-level high to turn on the main LEDs. Drive both ENM1 and ENM2 to a logic-level low to turn off the main LEDs. The dimming technique is discussed in the *Applications Information* section.
21	ENF	Enable and Dimming Control for F1–F4. Drive ENF to a logic-level high to turn on the flash LEDs. Drive ENF to a logic-level low to turn off the flash LEDs. The dimming technique is discussed in the *Applications Information* section.
22	C1N	Transfer Capacitor 1 Negative Connection. Connect a 1µF ceramic capacitor between C1P and C1N. C1N is internally shorted to IN during shutdown.

1x/1.5x/2x White LED Charge Pump with Two LDOs in 4mm x 4mm Thin QFN

Pin Description (continued)

PIN	NAME	FUNCTION
23	C1P	Transfer Capacitor 1 Positive Connection. Connect a 1µF ceramic capacitor between C1P to C1N. During shutdown, if OUT > IN, C1P is shorted to OUT. If OUT < IN, C1P is shorted to IN.
24	PGND	Power Ground. Connect PGND to system ground. PGND is used for charge-pump switching currents.
25	OUT	Charge-Pump Output. Bypass OUT to GND with a 10µF ceramic capacitor. Connect to the anodes of all the LEDs. OUT is internally pulled to ground through a 5kΩ resistor during shutdown.
26	C2P	Transfer Capacitor 2 Positive Connection. Connect a 1µF ceramic capacitor between C2P to C2N. During shutdown, if OUT > IN, C2P is shorted to OUT. If OUT < IN, C2P is shorted to IN.
27	C2N	Transfer Capacitor 2 Negative Connection. Connect a 1µF ceramic capacitor between C2P and C2N. C2N is internally shorted to IN during shutdown.
28	P1	Default Output-Voltage Select Input. P1 and P2 set the LDO1 and LDO2 voltages to one of nine combinations (Table 2). P1 is high impedance in an off condition and shortly after an on condition.
—	EP	Exposed Paddle. Connect to GND and PGND.

Detailed Description

The MAX8631X/Y charge pump drives up to 4 white LEDs in the main display for backlighting and up to 4 white LEDs for flash, all with regulated constant current for uniform intensity. By utilizing adaptive 1x/1.5x/2x charge-pump modes and very-low-dropout current regulators, it achieves high efficiency over the 1-cell lithium-battery input voltage range. 1MHz fixed-frequency switching allows for tiny external components and low input ripple. Two on-board 200mA programmable-output-voltage LDOs are provided to meet camera-module requirements.

1x to 1.5x Switchover

When V_{IN} is higher than V_{OUT}, the MAX8631X/Y operates in 1x mode and V_{OUT} is pulled up to V_{IN}. The internal current regulators regulate the LED current. As V_{IN} drops, $V_{M_}$ (or $V_{F_}$) eventually falls below the switchover threshold of 100mV and the MAX8631X/Y starts switching in 1.5x mode. When the input voltage rises above V_{OUT} by approximately 50mV, the MAX8631X/Y switches back to 1x mode.

1.5x to 2x Switchover

When V_{IN} is less than V_{OUT} but greater than two-thirds V_{OUT}, the MAX8631X/Y operates in 1.5x mode. The internal current regulators regulate the LED current. As V_{IN} drops, $V_{M_}$ (or $V_{F_}$) eventually falls below the switchover threshold of 100mV, and the MAX8631X/Y starts switching in 2x mode. When the input voltage rises above two-thirds V_{OUT} by approximately 50mV, the MAX8631X/Y switches back to 1.5x mode.

True Shutdown is a trademark of Maxim Integrated Products, Inc.

Soft-Start

The MAX8631X/Y includes soft-start circuitry to limit inrush current at turn-on. Once the input voltage is applied, the output capacitor is charged directly from the input with a ramped current source (with no charge-pump action) until the output voltage approaches the input voltage. Once the output capacitor is charged, the charge pump determines if 1x, 1.5x, or 2x mode is required. In the case of 1x mode, the soft-start is terminated and normal operation begins. In the case of 1.5x or 2x mode, soft-start operates until the lowest voltage of M1–M4 and F1–F4 reaches regulation. If the output is shorted to ground or is pulled to less than 1.25V, the output current is limited by soft-start.

True Shutdown™ Mode

When ENM1, ENM2, and ENF are simultaneously held low for 2.5ms or longer, the MAX8631X/Y is shut down and put in a low-current shutdown mode, and the input is isolated from the output. OUT is internally pulled to GND with 5kΩ during shutdown.

Thermal Derating

The MAX8631X/Y limits the maximum LED current depending on the die temperature. The maximum LED current is set by the R_{SETM} and R_{SETF} resistors. Once the temperature reaches +43°C, the LED current decreases by 1.7%/°C. Due to the package's exposed paddle, the die temperature is always very close to the PC board temperature.

The temperature derating function allows the LED current to be safely set higher at normal operating temperatures, thereby allowing either a brighter display or fewer LEDs to be used for normal display brightness.

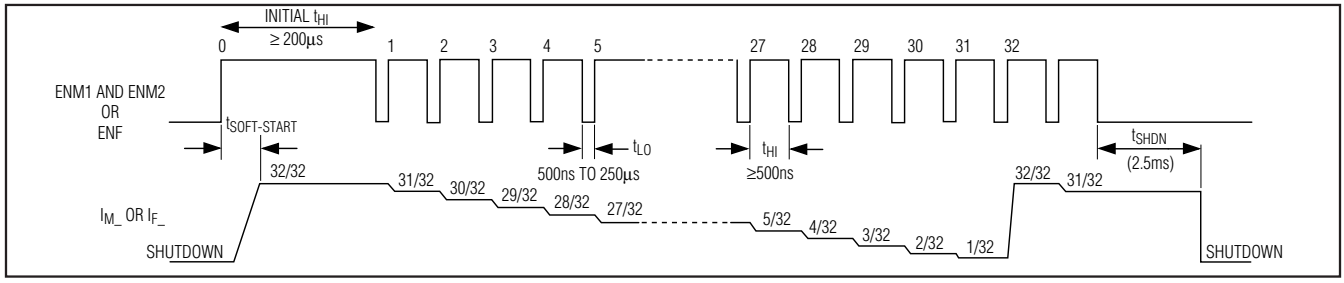

Figure 2. ENM_ and ENF Timing Diagram

Thermal Shutdown

The MAX8631X/Y includes a thermal-limit circuit that shuts down the IC at approximately +160°C. Turn-on occurs after the IC cools by approximately 20°C.

Applications Information

Setting the Main Output Current

SETM controls M1–M4 regulation current. Current flowing into M1, M2, M3, and M4 is a multiple of the current flowing out of SETM:

$$I_{M1} = I_{M2} = I_{M3} = I_{M4} = K \times (0.6V / R_{SETM})$$

where K = 230, and R_{SETM} is the resistor connected between SETM and GND (see the *Typical Operating Circuit*).

Table 1. ENM1/ENM2 States

ENM1/ENM2 STATES	BRIGHTNESS	M1–M4 CURRENT
ENM1 = low, ENM2 = low	Shutdown	0
ENM1 = high, ENM2 = high	Full brightness	230 x I_{SETM}

Setting the Flash Output Current

SETF controls the F1–F4 regulation current. Current flowing into F1, F2, F3, and F4 is a multiple of the current flowing out of SETF.

$$I_{F1} = I_{F2} = I_{F3} = I_{F4} = N \times (0.6V / R_{SETF})$$

where N = 690.

Single-Wire Pulse Dimming

For more dimming flexibility or to reduce the number of control traces, the MAX8631X/Y supports serial pulse dimming. Connect ENM1 and ENM2 together to enable single-wire pulse dimming of the main LEDs (or ENF only for single-wire pulse dimming of the flash LEDs). See Figure 3. When ENM1 and ENM2 (or ENF) go high simultaneously, the main (or flash) LEDs are enabled at full brightness. Each subsequent low-going pulse (500ns to 250µs pulse width) reduces the LED current by 3.125% (1/32), so after one pulse the LED current is 96.9% (or 31/32) x I_{LED}. The 31st pulse reduces the current to 0.03125 x I_{LED}. The 32nd pulse sets the LED current back to I_{LED}. Figure 2 shows a timing diagram for single-wire pulse dimming. Because soft-start is longer than the initial t_{HI}, apply dimming pulses quickly upon startup (after initial t_{HI}) to avoid LED current transitioning through full brightness.

Simple On/Off Control

If dimming control is not required, connect ENM1 to ENM2 for simple on/off control. Drive both ENM1 and ENM2 to a logic-level high to turn on the main LEDs. Drive both ENM1 and ENM2 to a logic-level low to turn off the main LEDs. ENF is the simple on/off control for the flash LEDs. Drive ENF to a logic-level high to turn on the flash LEDs. Drive ENF to a logic-level low to turn off the flash LEDs. In this case, LED current is set by the values of R_{SETM} and R_{SETF}.

Driving Fewer than 8 LEDs

When driving fewer than 8 LEDs, two different connection schemes can be used. The first scheme is shown in Figure 4 where LED drivers are connected together. This method allows increased current through the LED and effectively allows total LED current to be I_{LED} multiplied by the number of connected drivers. The second method of connection is shown in Figure 5 where standard white LEDs are used and fewer than 8 are connected. This scheme does not alter current through each LED but ensures that the unused LED driver is properly disabled.

Input Ripple

For LED drivers, input ripple is more important than output ripple. Input ripple is highly dependent on the source supply's impedance. Adding a lowpass filter to the input further reduces input ripple. Alternately, increasing C_{IN} to 22µF cuts input ripple in half with only a small increase in footprint. The 1x mode always has very low input ripple.

1x/1.5x/2x White LED Charge Pump with Two LDOs in 4mm x 4mm Thin QFN

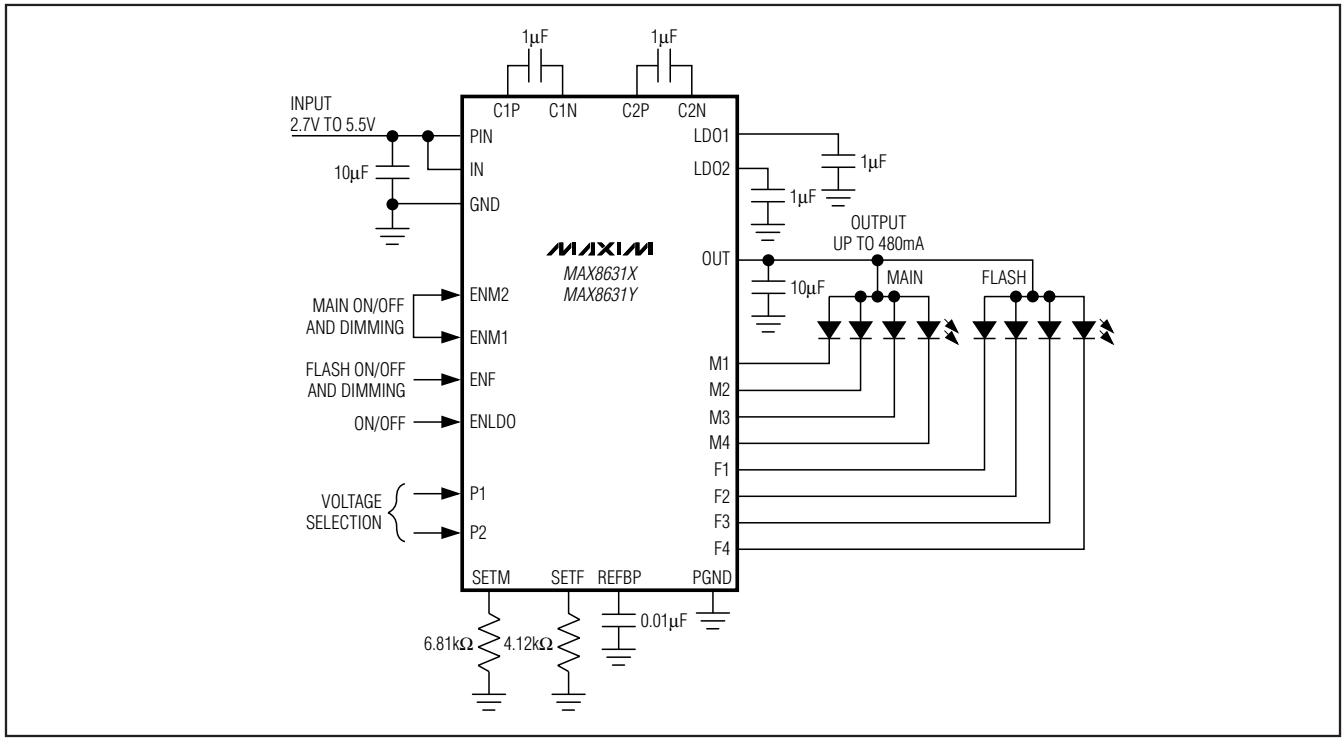

Figure 3. Dimming Using Single-Wire, Serial-Pulse Interface

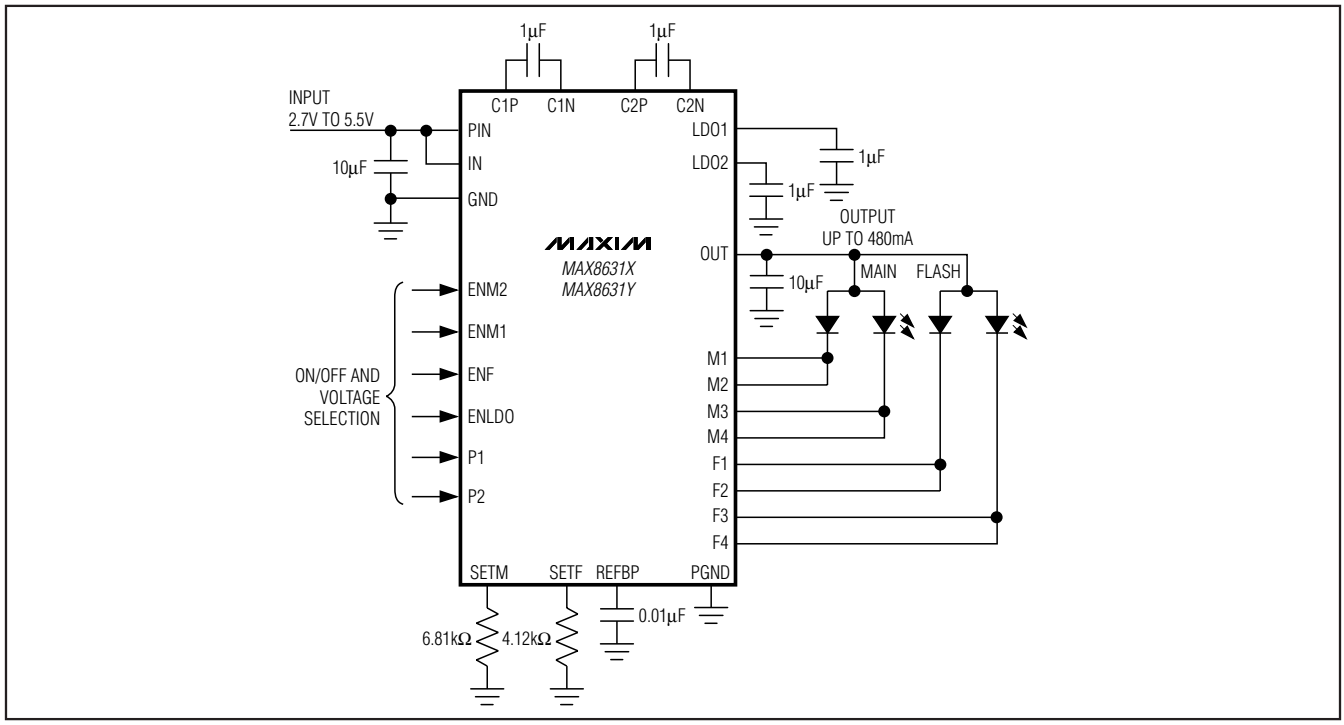

Figure 4. Providing Increased LED Current per LED

1x/1.5x/2x White LED Charge Pump with Two LDOs in 4mm x 4mm Thin QFN

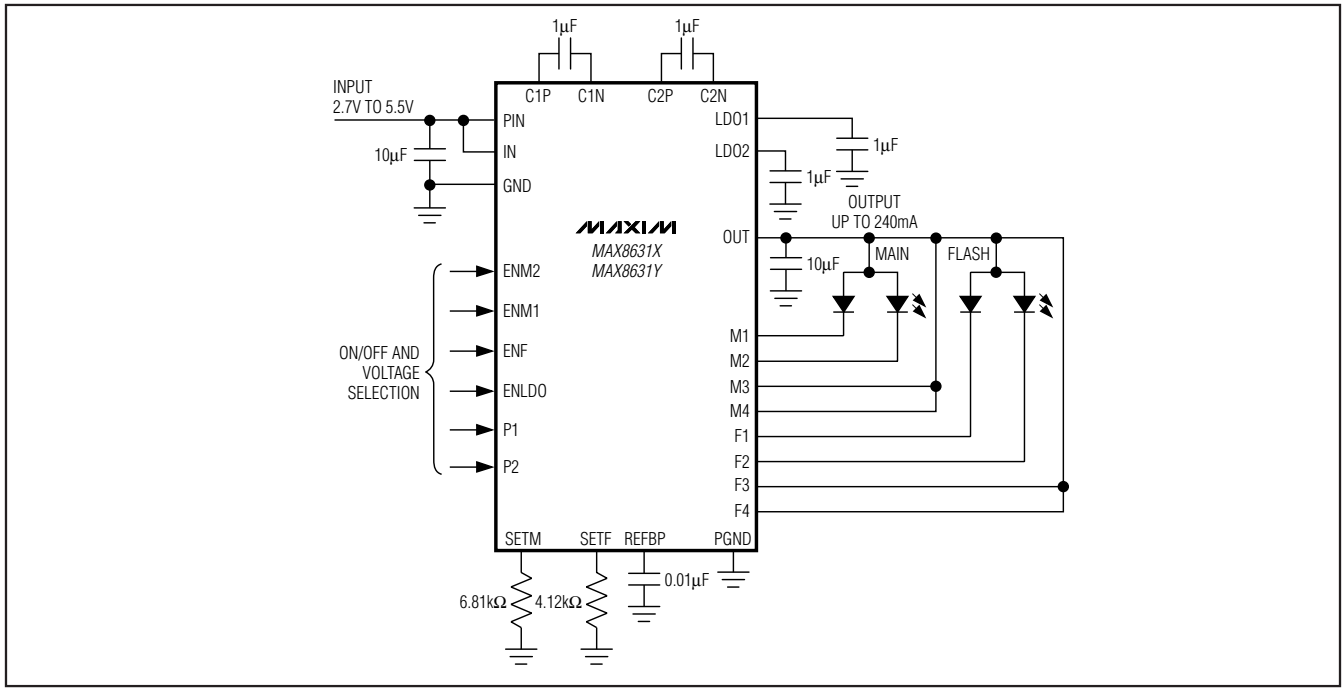

Figure 5. Schematic for When Fewer than 8 LEDs Is Acceptable

Typical operating waveforms shown in the *Typical Operating Characteristics* show input ripple current in 1x, 1.5x, and 2x mode.

LDO Output Voltage Selection (P1 and P2)

As shown in Table 2, the LDO output voltages, LDO1 and LDO2 are pin-programmable by the logic states of P1 and P2. P1 and P2 are tri-level inputs: IN, open, and GND. The input voltage, V_{IN}, must be greater than the selected LDO1 and LDO2 voltages. The logic states of P1 and P2 can be programmed only during ENLDO low. Once the LDO_ voltages are programmed, their values do not change by changing P1 or P2 during ENLDO high.

Component Selection

Use only ceramic capacitors with an X5R, X7R, or better dielectric. See Table 3 for a list of recommended parts.

Connect a 1µF ceramic capacitor between LDO1 and GND, and a second 1µF ceramic capacitor between LDO2 and GND for 200mA applications. The LDO output capacitor's (C_{LDO}) equivalent series resistance (ESR) affects stability and output noise. Use output capacitors with an ESR of 0.1Ω or less to ensure stability and optimum transient response. Connect $C_{LDO_}$ as close to the MAX8631X/Y as possible to minimize the impact of PC board trace inductance.

Table 2. P1 and P2, LDO Output Voltage Selection

P1	P2	MAX8631X		MAX8631Y	
		LDO1 (V)	LDO2 (V)	LDO1 (V)	LDO2 (V)
IN	IN	3.3	1.8	2.8	2.6
IN	OPEN	3.0	1.5	2.8	2.8
IN	GND	2.8	1.5	2.9	1.5
OPEN	IN	3.3	1.5	2.6	1.9
OPEN	OPEN	2.6	1.8	2.6	2.6
OPEN	GND	2.6	1.5	2.8	1.9
GND	IN	3.0	1.8	2.9	1.8
GND	OPEN	2.8	1.8	2.9	1.9
GND	GND	2.5	1.8	2.9	2.9

PC Board Layout and Routing

The MAX8631X/Y is a high-frequency switched-capacitor voltage regulator. For best circuit performance, use a solid ground plane and place C_{IN}, C_{OUT}, C3, and C4 as close to the MAX8631X/Y as possible. There should be no vias on C_{IN}. Connect GND and PGND to the exposed paddle directly under the IC. Refer to the MAX8631X/Y evaluation kit for an example.

1x/1.5x/2x White LED Charge Pump with Two LDOs in 4mm x 4mm Thin QFN

Table 3. Recommended Components for Figure 1

DESIGNATION	VALUE	MANUFACTURER	PART NUMBER	DESCRIPTION
C1, C5	10µF	TDK	C2012X5R0J106M	10µF ±20%, 6.3V X5R ceramic capacitors (0805)
C3, C4, C6, C7	1µF	TDK	C1005X5R0J105M	1µF ±20%, 6.3V X5R ceramic capacitors (0402)
C8	0.01µF	TDK	C1005X7R1E103K	0.01µF ±10%, 25V X7R ceramic capacitor (0402)
D1–D4	—	Nichia	NSCW215T	White LEDs
D5 (D5–D8)	—	Nichia	NBCW011T	White LEDs, 4 LEDs in one package
R_{SETM}, R_{SETF}	As Required	Panasonic Vishay	—	1% resistor

Chip Information

PROCESS: BiCMOS

Package Information

For the latest package outline information and land patterns, go to **www.maxim-ic.com/packages**.

PACKAGE TYPE	PACKAGE CODE	DOCUMENT NO.
28 TQFN-EP	T2844-1	**21-0139**

Pin Configuration

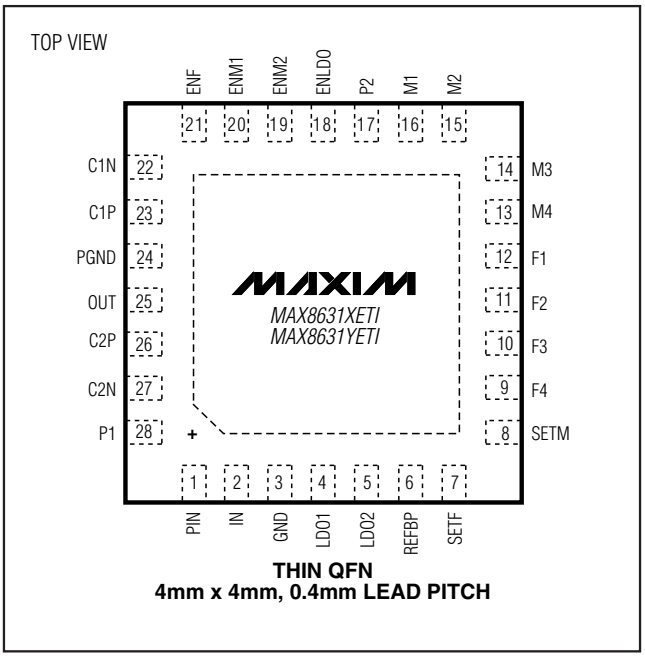

THIN QFN
4mm x 4mm, 0.4mm LEAD PITCH

1x/1.5x/2x White LED Charge Pump with Two LDOs in 4mm x 4mm Thin QFN

Revision History

REVISION NUMBER	REVISION DATE	DESCRIPTION	PAGES CHANGED
3	6/08	Removed PWM dimming control feature and updated ENM_ and ENF low shutdown delay EC values	1, 2, 9–12, 14

Maxim cannot assume responsibility for use of any circuitry other than circuitry entirely embodied in a Maxim product. No circuit patent licenses are implied. Maxim reserves the right to change the circuitry and specifications without notice at any time.

© 2008 Maxim Integrated Products MAXIM is a registered trademark of Maxim Integrated Products, Inc.