19-0825; Rev 0; 5/07

EVALUATION KIT AVAILABLE

125mA 1x/1.5x Charge Pumps for 5 White LEDs in 3mm x 3mm TDFN

General Description

The MAX8630W/MAX8630X charge pumps drive up to 5 white LEDs with regulated constant current up to 125mA total. By utilizing adaptive 1x/1.5x charge-pump modes and very low-dropout current regulators, they achieve high efficiency over the full 1-cell Li+ battery input voltage range. The 1MHz fixed-frequency switching allows for tiny external components, and the regulation scheme is optimized to ensure low EMI and low input ripple. An integrated derating function protects the LEDs from overheating during high ambient temperatures.

The MAX8630W/MAX8630X are factory trimmed for full-scale LED current options of 15mA, 18mA, 20mA, and 25mA. The MAX8630X uses two enable inputs (ENM for 3 main LEDs and ENS for 2 sub LEDs) for simple on/off control and single-wire, serial-pulse dimming in 32 linear steps. The MAX8630W uses a single direct PWM input (PWM) to control all 5 LEDs with DC current proportional to the PWM duty cycle. If both ENM and ENS (or PWM) are kept low for more than 4ms, the MAX8630_ enters shutdown. The MAX8630W/MAX8630X are available in a 14-pin, 3mm x 3mm TDFN package (0.8mm max height).

Applications

Display Backlight (Up to 5 LEDs)

Main (3 LEDs) + Sub (2 LEDs) Displays

Cell Phones and Smartphones

PDAs, Digital Cameras, and Camcorders

Features

- **93% Max/85% Avg. Efficiency (P_{LED}/P_{BATT}) Over Li+ Battery Discharge**
- **1% LED Current Accuracy**
- **125mA Total Drive Capability**
- **Adaptive 1x/1.5x Mode Switchover**
- **Single-Wire, Serial-Pulse Dimming (MAX8630X) Independent On/Off/Dimming for Main and Sub Linear—Full, 31/32nd, 30/32nd, … 1/32nd**
- **Direct-PWM Dimming (MAX8630W)**
- **15, 18, 20, and 25mA Full-Scale Versions**
- **Low 0.1µA Shutdown Current**
- **Soft-Start Eliminates Inrush Current**
- **Output Overvoltage Protection**
- **Thermal-Derating Function Protects LEDs**
- **14-Pin, 3mm x 3mm TDFN Package**

Ordering Information

PART	PIN-PACKAGE	TOP MARK	PKG CODE
MAX8630WETD15+T	14 TDFN-14 (3mm x 3mm)	ADQ	T1433-2

Note: *All devices are specified to operate over the -40°C to +85°C operating temperature range.*

+Denotes a lead-free package.
T = Tape and reel.

Ordering Information continued at end of data sheet.

Selector Guide appears at end of data sheet.

Typical Operating Circuit

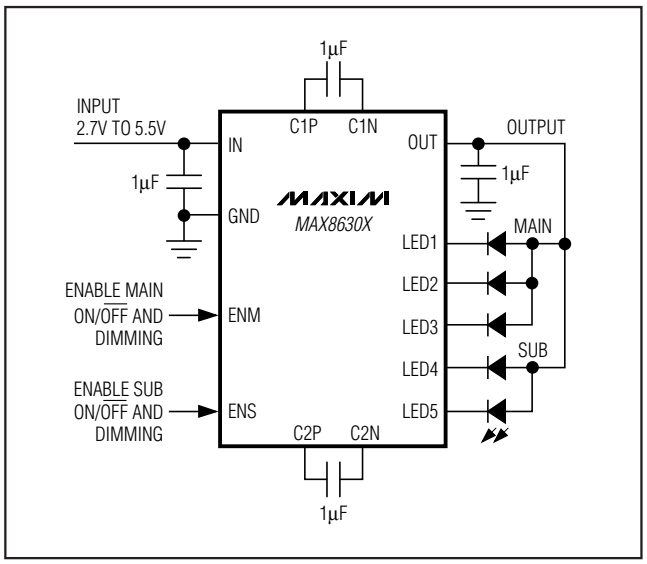

Pin Configuration

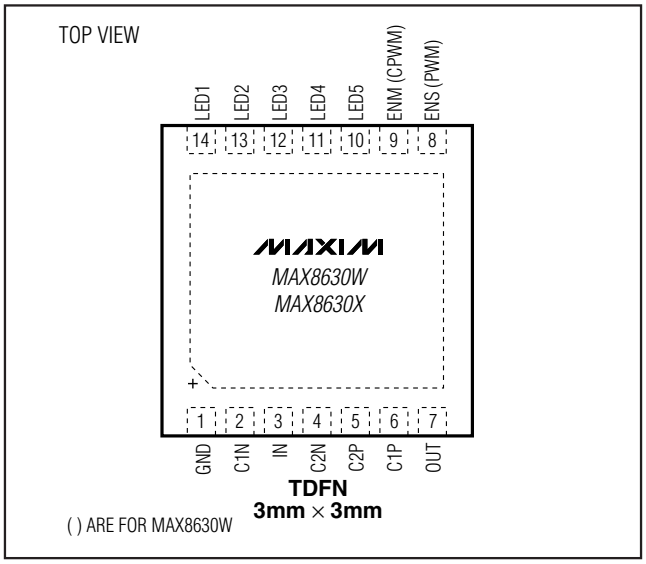

For pricing, delivery, and ordering information, please contact Maxim/Dallas Direct! at 1-888-629-4642, or visit Maxim's website at www.maxim-ic.com.

125mA 1x/1.5x Charge Pumps for 5 White LEDs in 3mm x 3mm TDFN

ABSOLUTE MAXIMUM RATINGS

IN, OUT to GND .....-0.3V to +6.0V
C1N, C2N, ENM, CPWM, ENS, PWM to GND .....-0.3V to (V_{IN} + 0.3V)
LED_ to GND .....-0.3V to (V_{OUT} + 0.3V)
C1P, C2P to GND ...-0.3V to greater of (V_{OUT} + 1V) or (V_{IN} + 1V)
OUT Short Circuit to GND .....Continuous

Continuous Power Dissipation (T_A = +70°C)
14-Pin TDFN 3mm x 3mm
(derate 18.2mW/°C above +70°C) 1454mW
Junction Temperature .....+150°C
Storage Temperature Range .....-65°C to +150°C
Lead Temperature (soldering, 10s) .....+300°C

Stresses beyond those listed under "Absolute Maximum Ratings" may cause permanent damage to the device. These are stress ratings only, and functional operation of the device at these or any other conditions beyond those indicated in the operational sections of the specifications is not implied. Exposure to absolute maximum rating conditions for extended periods may affect device reliability.

ELECTRICAL CHARACTERISTICS

(V_{IN} = 3.6V, V_{GND} = 0V, EN_ (PWM) = IN, T_A = -40°C to +85°C, unless otherwise noted. Typical values are at T_A = +25°C.) (Note 1)

PARAMETER	CONDITIONS		MIN	TYP	MAX	UNITS
IN Operating Voltage			2.7		5.5	V
Undervoltage-Lockout Threshold	V_{IN} rising or falling		2.20	2.45	2.65	V
Undervoltage-Lockout Hysteresis				100		mV
Output Overvoltage Protection Threshold	V_{OUT} rising, any LED_ = GND			5		V
No-Load Supply Current	1/32nd setting, 1.5x mode			1.4		mA
	1/32nd setting, 1x mode			0.35		
Shutdown Supply Current	ENM = ENS (PWM) = GND	T_A = +25°C		0.01	2	µA
		T_A = +85°C		0.1		
Soft-Start Time ($t_{SOFT-START}$)				2		ms
Full-Scale LED Current	MAX8630_ETD15			15		mA
	MAX8630_ETD18			18		
	MAX8630_ETD20			20		
	MAX8630_ETD25			25		
Full-Scale LED Current Accuracy	T_A = +25°C		-1	±0.3	+1	%
	T_A = -40°C to derating function start temperature		-3.5	±0.3	+3.5	
Derating Function Start Temperature				40		°C
Derating Function Slope	T_A = +40°C to +85°C			-1.67		%/°C
LED_ Dropout Voltage	100% LED setting (Note 2)			40	75	mV
1x to 1.5x Mode Transition Threshold	$V_{LED_}$ falling			88		mV
Input Voltage Mode Transition Hysteresis				70		mV
1.5x Mode Regulation Voltage	Minimum of $V_{LED_}$			122		mV
OUT Pulldown Resistance in Shutdown	ENM = ENS (PWM) = GND			5		kΩ

ELECTRICAL CHARACTERISTICS (continued)

(V_{IN} = 3.6V, V_{GND} = 0V, EN_ (PWM) = IN, T_A = -40°C to +85°C, unless otherwise noted. Typical values are at T_A = +25°C.) (Note 1)

PARAMETER	CONDITIONS		MIN	TYP	MAX	UNITS
Open-Loop OUT Resistance	1x mode, (V_{IN} - V_{OUT}) / I_{OUT}			0.8	1.5	Ω
	1.5x mode, (1.5V_{IN} - V_{OUT}) / I_{OUT}			3.2	7.2	
Maximum OUT Current	V_{IN} ≥ 3.2V, V_{OUT} = 3.9V		125			mA
OUT Short-Circuit Current Limit	V_{OUT} < 1.25V			57		mA
Switching Frequency				1		MHz
Direct-PWM Dimming Filter Corner Frequency (MAX8630W)	C_{CPWM} = 0.1µF, (PWM frequency of 900Hz to 200kHz recommended)			10		Hz
EN_ (PWM) High Voltage	V_{IN} = 2.7V to 5.5V		1.4			V
EN_ (PWM) Low Voltage	V_{IN} = 2.7V to 5.5V				0.4	V
EN_ (PWM) Minimum Input Slew Rate	V_{IN} = 2.7V to 5.5V (recommended minimum slew rate)			1		V/µs
EN_ (PWM) Input Current	$V_{EN_(PWM)}$ = 0V or 5.5V	T_A = +25°C		0.01	1	µA
		T_A = +85°C		0.1		
EN_ (PWM) Low Shutdown Delay (t_{SHDN})			4			ms
EN_ t_{LO} (See Figure 4)			0.5		500.0	µs
EN_ t_{HI} (See Figure 4)			0.5			µs
Initial EN_ t_{HI} (See Figure 4)	First EN_ (PWM) high pulse		50			µs
Thermal Shutdown				+160		°C
Thermal-Shutdown Hysteresis				20		°C

Note 1: Limits are 100% production tested at T_A = +25°C. Limits over the operating temperature range are guaranteed by design.
Note 2: Dropout voltage is defined as the LED_ to GND voltage at which current into LED_ drops 10% from the value at $V_{LED_}$ = 0.2V.

Typical Operating Characteristics

(V_{IN} = 3.6V, ENM = ENS = IN, T_A = +25°C, unless otherwise noted.)

EFFICIENCY vs. INPUT VOLTAGE DRIVING 5 LEDs

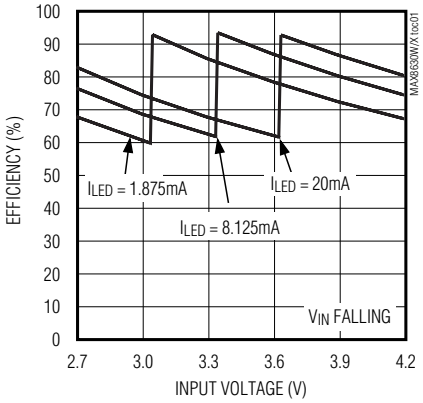

INPUT CURRENT vs. INPUT VOLTAGE DRIVING 5 LEDs

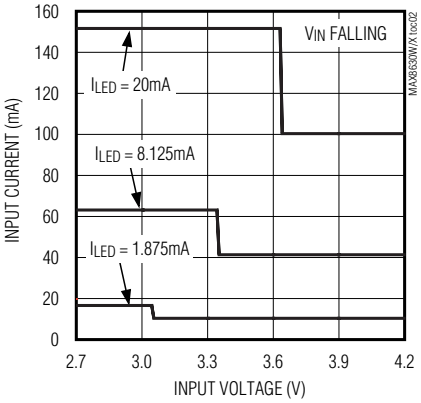

INPUT CURRENT vs. INPUT VOLTAGE DRIVING 3 MAIN LEDs

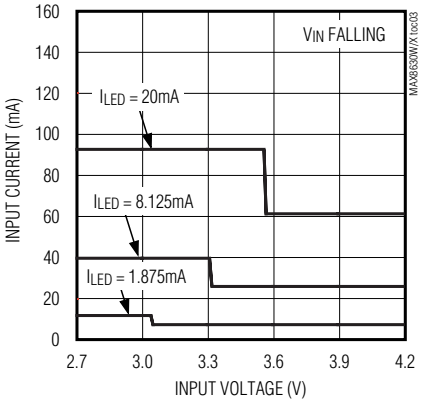

125mA 1x/1.5x Charge Pumps for 5 White LEDs in 3mm x 3mm TDFN

Typical Operating Characteristics (continued)

(V_{IN} = 3.6V, ENM = ENS = IN, T_A = +25°C, unless otherwise noted.)

INPUT CURRENT vs. INPUT VOLTAGE DRIVING 2 SUB LEDs

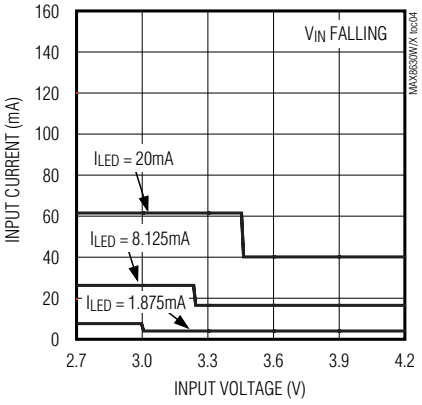

INPUT RIPPLE VOLTAGE vs. SUPPLY VOLTAGE DRIVING 5 WHITE LEDs

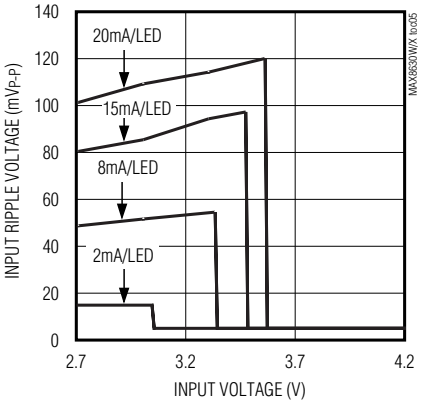

LED CURRENT MATCHING vs. INPUT VOLTAGE (25mA/LED)

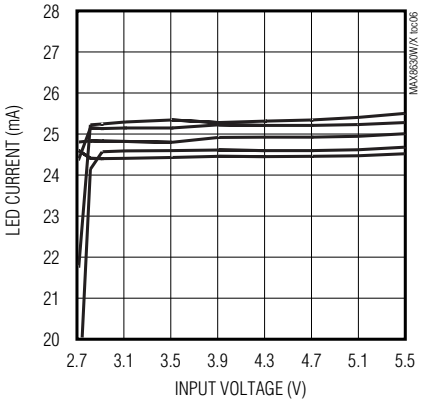

LED CURRENT MATCHING vs. INPUT VOLTAGE (2.5mA/LED)

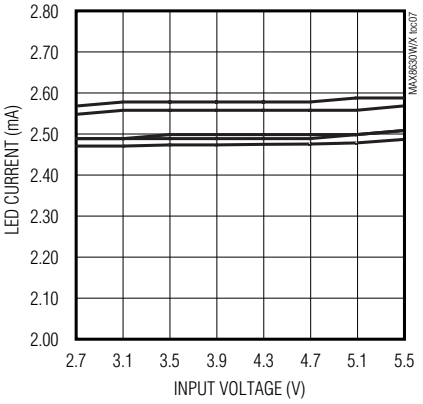

OUTPUT CURRENT vs. TEMPERATURE (5 LEDs AT 25mA EACH)

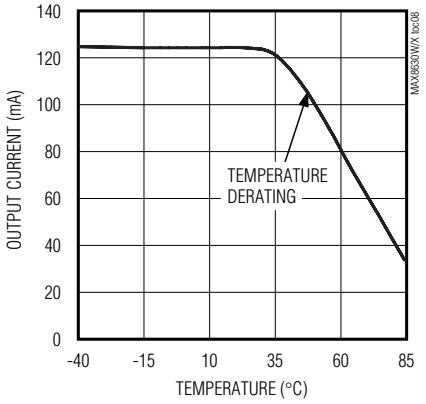

1x MODE OPERATING WAVEFORMS (V_{IN} = 4.0V)

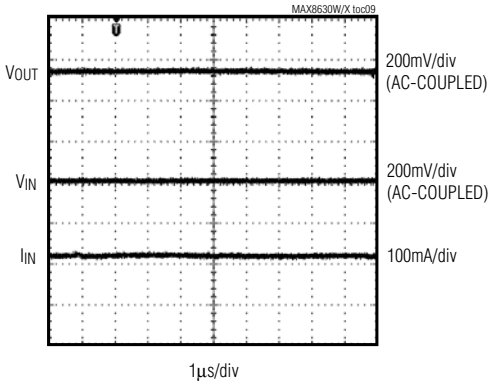

1.5x MODE OPERATING WAVEFORMS (V_{IN} = 3.6V)

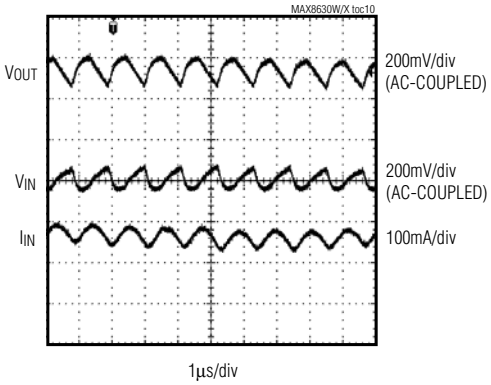

Typical Operating Characteristics (continued)

(V_{IN} = 3.6V, ENM = ENS = IN, T_A = +25°C, unless otherwise noted.)

STARTUP AND SHUTDOWN

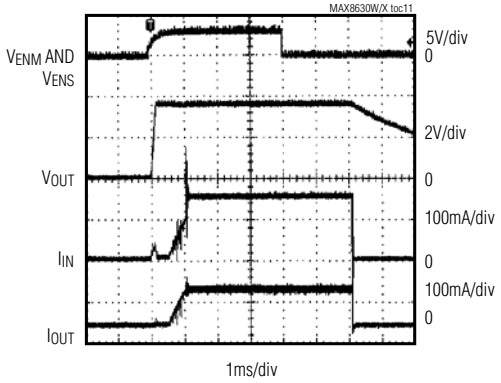

MAIN STARTUP AND SHUTDOWN WITH SUB ENABLED

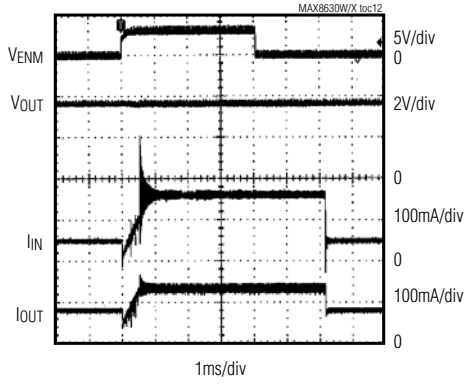

STARTUP AND DIMMING

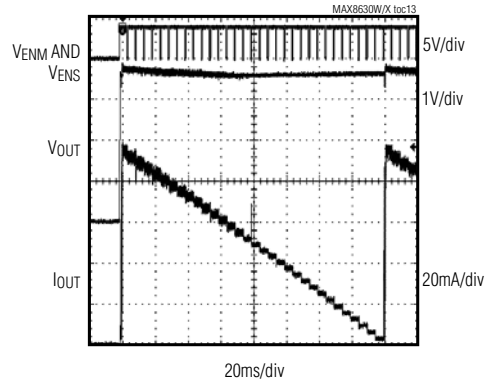

LINE-TRANSIENT RESPONSE WITH MODE CHANGE (V_{IN} = 3.8V TO 3.2V TO 3.8V)

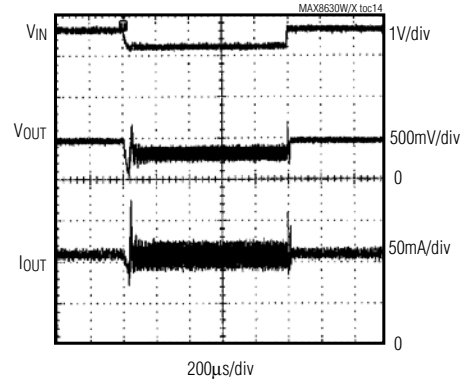

Pin Description

PIN		NAME	FUNCTION
MAX8630X	MAX8630W		
1	1	GND	Ground. Connect GND to system ground and the input bypass capacitor as close to the IC as possible. Connect GND to the exposed pad directly under the IC.
2	2	C1N	Transfer Capacitor 1 Negative Connection. Connect a 1µF ceramic capacitor from C1P to C1N.
3	3	IN	Supply Voltage Input. Connect a 1µF ceramic capacitor from IN to GND. The input voltage range is 2.7V to 5.5V.
4	4	C2N	Transfer Capacitor 2 Negative Connection. Connect a 1µF ceramic capacitor from C2P to C2N.

125mA 1x/1.5x Charge Pumps for 5 White LEDs in 3mm x 3mm TDFN

Pin Description (continued)

PIN		NAME	FUNCTION
MAX8630X	MAX8630W		
5	5	C2P	Transfer Capacitor 2 Positive Connection. Connect a 1µF ceramic capacitor from C2P to C2N.
6	6	C1P	Transfer Capacitor 1 Positive Connection. Connect a 1µF ceramic capacitor from C1P to C1N.
7	7	OUT	Output. Connect a 1µF ceramic capacitor from OUT to GND. Connect OUT to the anodes of all the LEDs. In shutdown, OUT is pulled down by an internal 5kΩ resistor.
8	—	ENS	Enable and Dimming Control for Sub LEDs (LED4 and LED5). Drive ENS logic-low for greater than 4ms to disable the sub LEDs. Drive both ENM and ENS logic-low for greater than 4ms to shut down the IC. Drive ENS logic-high to begin soft-start and enable maximum (100%) sub LED current. Subsequent pulses on ENS cause the sub LED current to decrease in 32 linear steps. Because of the soft-start delay, it is possible to turn on the IC and quickly set a dim level so the sub LED current never transitions through the maximum setting. See the *ENM/ENS Dimming Control* section.
9	—	ENM	Enable and Dimming Control for Main LEDs (LED1, LED2, and LED3). Drive ENM logic-low for greater than 4ms to disable the main LEDs. Drive both ENM and ENS logic-low for greater than 4ms to shut down the IC. Drive ENM logic-high to begin soft-start and enable maximum (100%) main LED current. Subsequent pulses on ENM cause the main LED current to decrease in 32 linear steps. Because of the soft-start delay, it is possible to turn on the IC and quickly set a dim level so the main LED current never transitions through the maximum setting. See the *ENM/ENS Dimming Control* section.
—	8	PWM	Direct PWM input. PWM controls output current as a percentage of full-scale current in proportion to PWM signal duty cycle. The frequency range is 900Hz to 200kHz.
—	9	CPWM	PWM Filter Capacitor Connection. Connect a capacitor from CPWM to GND to form a filter with the internal 150kΩ resistor. The recommended capacitor for 10Hz corner is 0.1µF.
10	10	LED5	Sub LED Cathode Connections and Charge-Pump Feedback. Current flowing into LED_ is based on the ENS (or PWM) description above. The charge pump regulates the lowest LED_ voltage to 0.12V. Connect LED_ to OUT if the corresponding LED is not populated.
11	11	LED4	
12	12	LED3	Main LED Cathode Connections and Charge-Pump Feedback. Current flowing into LED_ is based on the ENM (or PWM) description above. The charge pump regulates the lowest LED_ voltage to 0.12V. Connect LED_ to OUT if the corresponding LED is not populated.
13	13	LED2	
14	14	LED1	
—	—	EP	Exposed Paddle. Connect to GND directly under the IC.

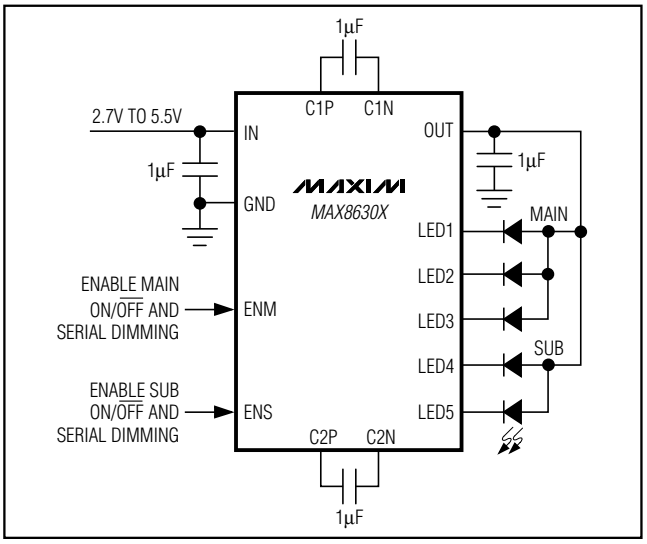

Figure 1. Typical Applications Circuit with the MAX8630X

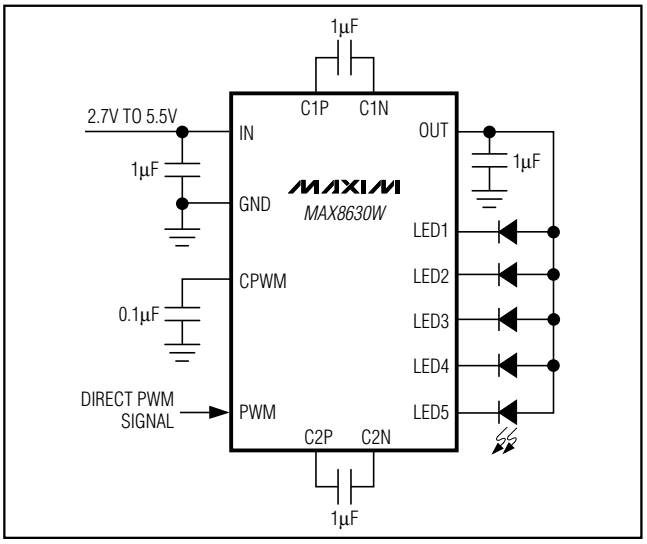

Figure 2. Typical Applications Circuit with the MAX8630W

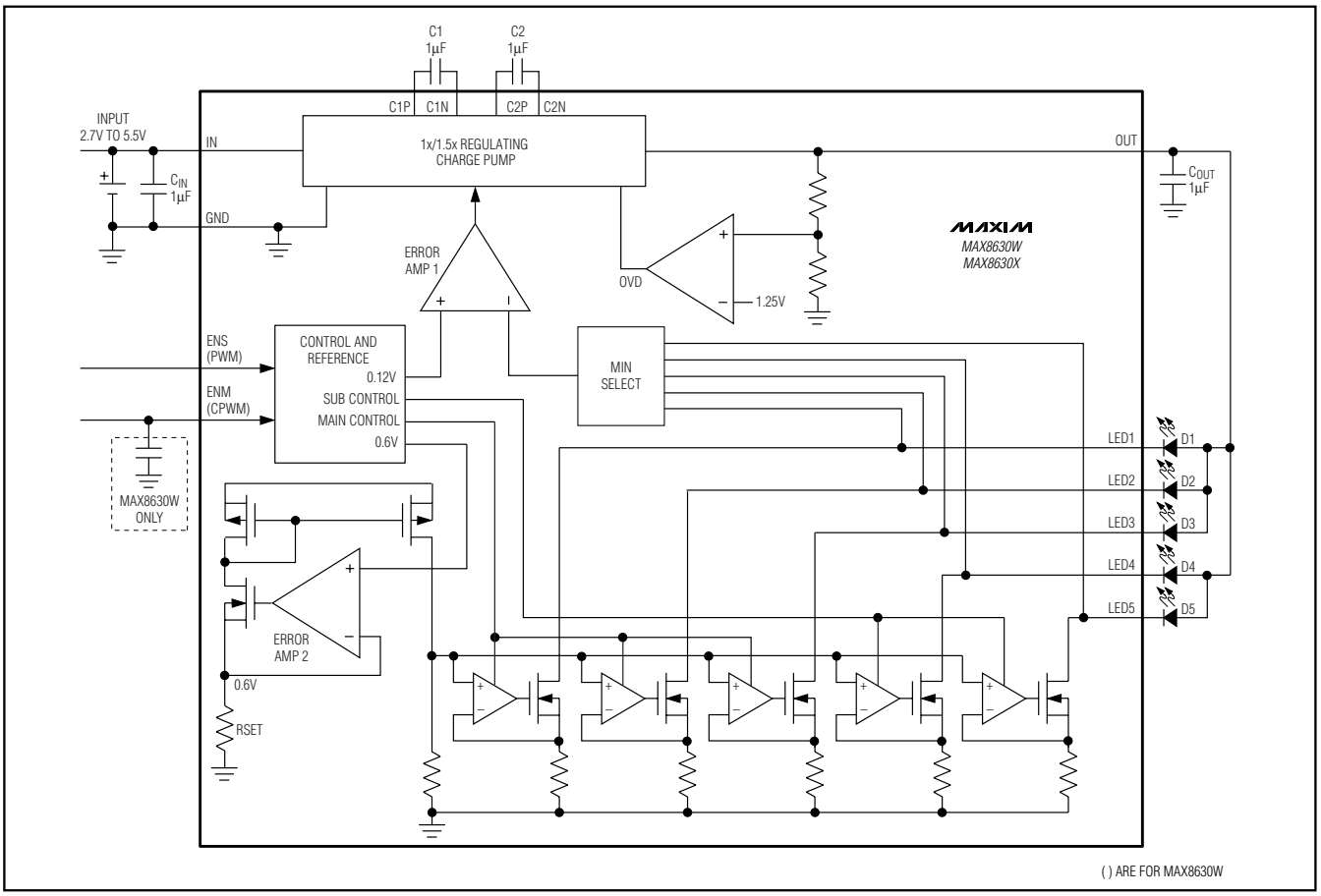

Figure 3. Functional Diagram

125mA 1x/1.5x Charge Pumps for 5 White LEDs in 3mm x 3mm TDFN

Detailed Description

The MAX8630_ charge pump drives up to 5 white LEDs (3 main LEDs and 2 sub LEDs) with regulated constant current for uniform intensity. By utilizing adaptive 1x/1.5x charge-pump modes and very low-dropout current regulators, it achieves 125mA guaranteed output-drive capability and high efficiency over the 1-cell Li+ battery input voltage range. 1MHz fixed-frequency switching allows for tiny external components and the regulation scheme is optimized to ensure low EMI and low input ripple. The MAX8630X provides independent on/off/dimming control for main and sub displays (see Figure 1). The MAX8630W allows direct-PWM dimming of all five LEDs together (see Figure 2). A functional diagram for the MAX8630X/MAX8630W is shown in Figure 3.

1x to 1.5x Switchover

When V_{IN} is higher than V_{OUT}, the MAX8630_ operates in 1x mode and V_{OUT} is pulled up to V_{IN}. The internal current regulators regulate the LED current. As V_{IN} drops, $V_{LEDMIN_}$ eventually falls below the switchover threshold of 88mV, and the MAX8630_ starts switching in 1.5x mode, and V_{LEDMIN} is regulated to 122mV by the charge pump. To switch back to 1x mode, the MAX8630_ determines if V_{IN} - V_{OUT} is sufficient to keep V_{LEDMIN} greater than 88mV. The comparator that makes this judgment is adaptive and matches the switchover for the conditions.

Soft-Start

The MAX8630_ includes soft-start circuitry to eliminate inrush current at turn-on. When starting up, the output capacitor is charged directly from the input with a ramped current source (with no charge-pump action) until the output voltage approaches the input voltage. Once this occurs, the charge pump enters 1x mode, and the LED output current is then ramped up in 32 linear steps. If the current regulators are in dropout at the end of this time, the charge pump switches to 1.5x mode. If the output is shorted to ground (V_{OUT} < 1.25V), the part stays in the initial soft-start stage and output current is limited by the ramped current source. Additionally, when the main or sub LED current rolls over from 1/32 to full, the LED current regulators soft-start again to eliminate input current spikes.

ENM/ENS Dimming Control (MAX8630X)

When the LEDs are enabled (by driving EN_ high), the MAX8630X goes through soft-start and brings the LED current up in 32 linear steps. Dim the MAX8630X by pulsing EN_ low (500ns to 500µs pulse width). Each pulse reduces the LED current by 1/32nd. After 31 pulses, the current reaches 1/32, and the next pulse restores the current to 100%. Figure 4 shows a timing diagram for EN_.

If dimming control is not required, ENM and ENS work as simple on/off controls. Drive ENM/ENS high to enable the LEDs, or drive ENM/ENS low for shutdown. The LEDs operate at 100% brightness under these simple on/off conditions.

PWM Dimming Control (MAX8630W)

Dim the MAX8630W by applying a direct-PWM logic-level signal to PWM. An internal resistor combined with the capacitor at CPWM forms a lowpass filter that converts the PWM signal to DC LED current that is proportional to the PWM signal's duty cycle. All five LEDS are controlled together on the MAX8630W. The PWM frequency range is 900Hz to 200kHz.

If dimming control is not required, PWM works as a simple on/off control. Drive PWM high to enable the LEDs, or drive PWM low for shutdown.

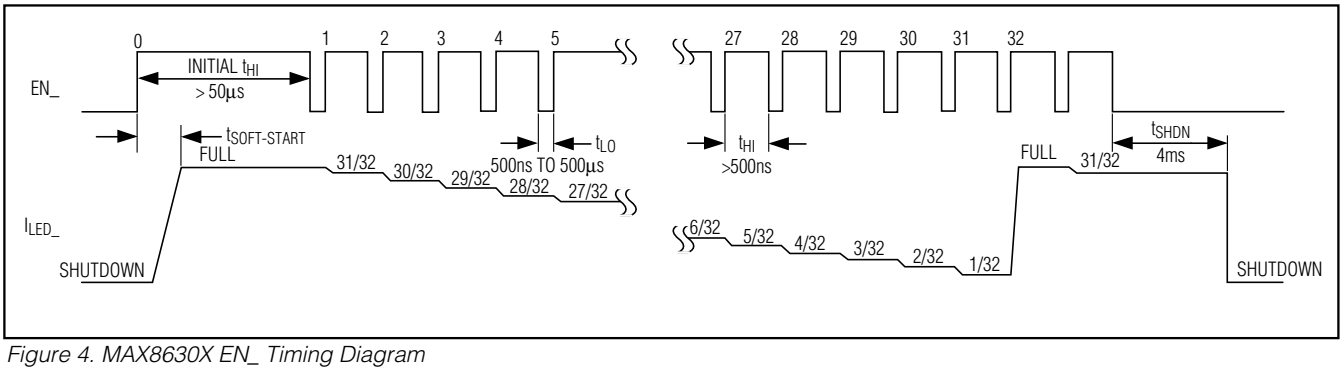

Figure 4. MAX8630X EN_ Timing Diagram

Shutdown Mode

When both ENM and ENS (or PWM) are held low for 4ms or longer, the MAX8630_ is shut down and put in a low-current mode. OUT is internally pulled to GND with 5kΩ during shutdown.

Overvoltage Protection

If any LED fails as an open circuit, the corresponding $V_{LED_}$ goes to 0V, and the output voltage is limited to about 5V by gating on/off the charge pump. In case any LED_ is floating or grounded, the MAX8630_ operates in the same overvoltage protection mode. To avoid overvoltage protection mode when using fewer than five LEDs, connect any unused LED_ to OUT. The MAX8630_ contains special circuitry to detect this condition and disables the corresponding current regulator to avoid wasting battery current.

Thermal Shutdown

The MAX8630_ includes a thermal-protection circuit that shuts down the IC when the die temperature reaches about +160°C. The part turns on after the IC cools by approximately 20°C.

Temperature Derating Function

The MAX8630 contains a derating function that automatically limits the LED current at high temperatures in accordance with the recommended derating curve of popular white LEDs. The derating function enables the safe usage of higher LED currents at room temperature, thus reducing the number of LEDs required to backlight the display. The derating circuit protects the LEDs from overheating at high PCB temperatures. The derating circuit limits the LED current by reducing the internal 600mV reference voltage above +40°C at approximately -1.67%/°C. The typical derating function characteristic is shown in the *Typical Operating Characteristics*.

Applications Information

Driving Fewer than 5 LEDs

To avoid overvoltage protection mode when using fewer than five LEDs, connect any unused LED_ to OUT. The MAX8630_ contains special circuitry to detect this condition and disables the corresponding current regulator to avoid wasting battery current.

Input Ripple

For LED drivers, input ripple is more important than output ripple. Input ripple depends on the source supply's output impedance. Adding a lowpass filter to the input of the MAX8630_ further reduces input ripple. Alternatively, increasing C_{IN} to 2.2µF (or 4.7µF) cuts input ripple in half (or in fourth) with only a small increase in footprint. The 1x mode always has very low input ripple.

Component Selection

Ceramic capacitors are recommended due to their small size, low cost, and low ESR. Select ceramic capacitors that maintain their capacitance over temperature and DC bias. Capacitors with X5R or X7R temperature characteristics generally perform well. See Table 1 for a list of recommended components. Using a larger value input capacitor helps to reduce input ripple (see the *Input Ripple* section).

PCB Layout and Routing

The MAX8630_ is a high-frequency, switched-capacitor voltage regulator. For best circuit performance, use a solid ground plane and place C_{IN}, C_{OUT}, C1, and C2 as close to the MAX8630_ as possible. See the MAX8630_ evaluation kit for an example layout.

Chip Information

PROCESS: BiCMOS

Table 1. Recommended Components

DESIGNATION	VALUE	MANUFACTURER	PART NUMBER	DESCRIPTION
C_{IN}, C_{OUT}, C1, C2	1µF	Taiyo Yuden	JMK105 BJ105MV	1µF ±20%, 6.3V X5R ceramic capacitors (0402)
		TDK	C1005X5R0J105M	1µF ±20%, 6.3V X5R ceramic capacitors (0402)
D1–D5	—	Nichia	NSCW215T	White LEDs

125mA 1x/1.5x Charge Pumps for 5 White LEDs in 3mm x 3mm TDFN

Ordering Information (continued)

PART	PIN-PACKAGE	TOP MARK	PKG CODE
MAX8630WETD18+T	14 TDFN-14 (3mm x 3mm)	ADR	T1433-2
MAX8630WETD20+T	14 TDFN-14 (3mm x 3mm)	ADS	T1433-2
MAX8630WETD25+T	14 TDFN-14 (3mm x 3mm)	ADT	T1433-2
MAX8630XETD15+T	14 TDFN-14 (3mm x 3mm)	ADU	T1433-2
MAX8630XETD18+T	14 TDFN-14 (3mm x 3mm)	ADV	T1433-2
MAX8630XETD20+T	14 TDFN-14 (3mm x 3mm)	ADW	T1433-2
MAX8630XETD25+T	14 TDFN-14 (3mm x 3mm)	ADX	T1433-2

Note: *All devices are specified to operate over the -40°C to +85°C operating temperature range.*

+Denotes a lead-free package.

T = Tape and reel.

Selector Guide

PART	FULL-SCALE CURRENT (mA)	DIMMING INTERFACE
MAX8630WETD15	15	Direct PWM
MAX8630WETD18	18	Direct PWM
MAX8630WETD20	20	Direct PWM
MAX8630WETD25	25	Direct PWM
MAX8630XETD15	15	Serial Pulse
MAX8630XETD18	18	Serial Pulse
MAX8630XETD20	20	Serial Pulse
MAX8630XETD25	25	Serial Pulse

125mA 1x/1.5x Charge Pumps for 5 White LEDs in 3mm x 3mm TDFN

Package Information

(The package drawing(s) in this data sheet may not reflect the most current specifications. For the latest package outline information go to **www.maxim-ic.com/packages**.)

6, 8, &10L, DFN THIN.EPS

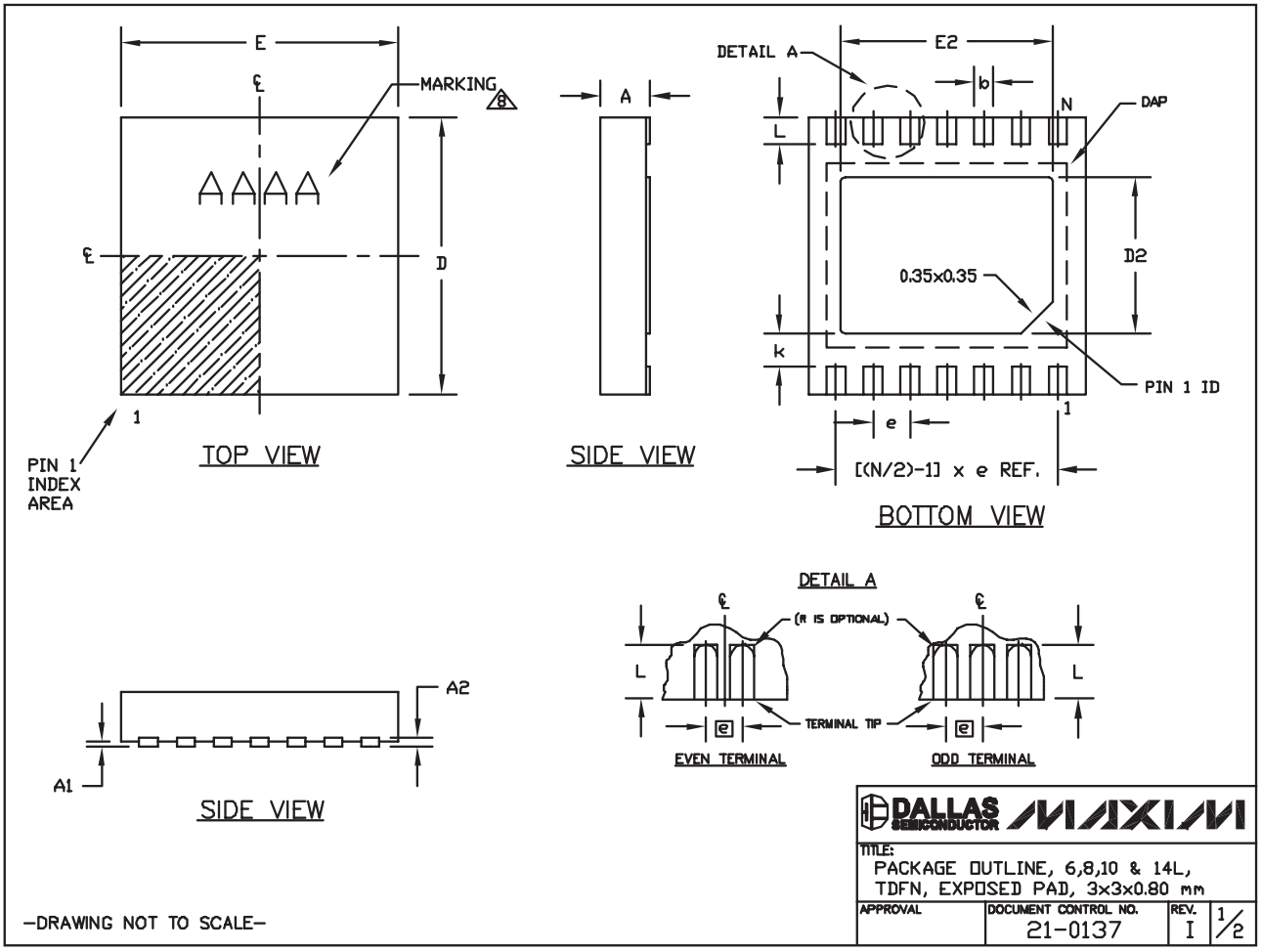

125mA 1x/1.5x Charge Pumps for 5 White LEDs in 3mm x 3mm TDFN

Package Information (continued)

(The package drawing(s) in this data sheet may not reflect the most current specifications. For the latest package outline information go to **www.maxim-ic.com/packages**.)

COMMON DIMENSIONS		
SYMBOL	MIN.	MAX.
A	0.70	0.80
D	2.90	3.10
E	2.90	3.10
A1	0.00	0.05
L	0.20	0.40
k	0.25 MIN.	
A2	0.20 REF.	

PACKAGE VARIATIONS							
PKG. CODE	N	D2	E2	e	JEDEC SPEC	b	[(N/2)-1] x e
T633-2	6	1.50±0.10	2.30±0.10	0.95 BSC	MO229 / WEEA	0.40±0.05	1.90 REF
T833-2	8	1.50±0.10	2.30±0.10	0.65 BSC	MO229 / WEEC	0.30±0.05	1.95 REF
T833-3	8	1.50±0.10	2.30±0.10	0.65 BSC	MO229 / WEEC	0.30±0.05	1.95 REF
T1033-1	10	1.50±0.10	2.30±0.10	0.50 BSC	MO229 / WEED-3	0.25±0.05	2.00 REF
T1033-2	10	1.50±0.10	2.30±0.10	0.50 BSC	MO229 / WEED-3	0.25±0.05	2.00 REF
T1433-1	14	1.70±0.10	2.30±0.10	0.40 BSC	- - - -	0.20±0.05	2.40 REF
T1433-2	14	1.70±0.10	2.30±0.10	0.40 BSC	- - - -	0.20±0.05	2.40 REF

NOTES:
1. ALL DIMENSIONS ARE IN mm. ANGLES IN DEGREES.
2. COPLANARITY SHALL NOT EXCEED 0.08 mm.
3. WARPAGE SHALL NOT EXCEED 0.10 mm.
4. PACKAGE LENGTH/PACKAGE WIDTH ARE CONSIDERED AS SPECIAL CHARACTERISTIC(S).
5. DRAWING CONFORMS TO JEDEC MO229, EXCEPT DIMENSIONS "D2" AND "E2", AND T1433-1 & T1433-2.
6. "N" IS THE TOTAL NUMBER OF LEADS.
7. NUMBER OF LEADS SHOWN ARE FOR REFERENCE ONLY.
8. MARKING IS FOR PACKAGE ORIENTATION REFERENCE ONLY.

DALLAS SEMICONDUCTOR MAXIM

TITLE: PACKAGE OUTLINE, 6,8,10 & 14L, TDFN, EXPOSED PAD, 3x3x0.80 mm

APPROVAL	DOCUMENT CONTROL NO.	REV.	
	21-0137	I	2/2

-DRAWING NOT TO SCALE-

Maxim cannot assume responsibility for use of any circuitry other than circuitry entirely embodied in a Maxim product. No circuit patent licenses are implied. Maxim reserves the right to change the circuitry and specifications without notice at any time.

© 2007 Maxim Integrated Products MAXIM is a registered trademark of Maxim Integrated Products, Inc.