19-3329; Rev 2; 8/09

EVALUATION KIT AVAILABLE

High-Efficiency LCD Boost with True Shutdown

General Description

The MAX8570 family of LCD step-up converters uses an internal n-channel switch and an internal p-channel output isolation switch. These converters operate from a 2.7V to 5.5V supply voltage and deliver up to 28V at the output.

A unique control scheme provides the highest efficiency over a wide range of load conditions. The internal MOSFET switch reduces external component count and a high switching frequency (up to 800kHz) allows for tiny surface-mount components. Three current-limit options are available. The MAX8570 and MAX8572 use a 110mA current limit to reduce ripple and component size in low-current applications. For high-power requirements, the MAX8574 and MAX8575 use a 500mA current limit and supply up to 20mA at 20V. The MAX8571 and MAX8573 use a 250mA current limit for a compromise between ripple and power. Built-in safety features protect the internal switch and down-stream components from fault conditions.

Additional features include a low quiescent current and a True Shutdown™ mode to save power. The MAX8570/MAX8571/MAX8574 allow the user to set the output voltage between 3V and 28V, and the MAX8572/MAX8573/MAX8575 have a preset 15V output. These step-up converters are ideal for small LCD panels with low current requirements, but can also be used in other applications. The MAX8571 evaluation kit is available to help reduce design time.

Applications

LCD Bias Generators

Polymer LEDs (OLED)

Cellular or Cordless Phones

Palmtop Computers

Personal Digital Assistants (PDAs)

Organizers

Handy Terminals

Pin Configurations

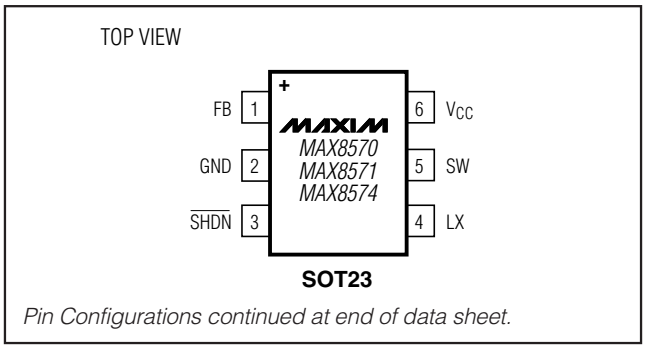

Pin Configurations continued at end of data sheet.

True Shutdown is a trademark of Maxim Integrated Products, Inc.

Features

- **15V or Adjustable Output Voltage Up to 28V**
- **Safety Features Protect Against Output Faults**
- **20mA at 20V from a Single Li+ Battery**
- **True Shutdown**
- **87% Efficiency**
- **Up to 800kHz Switching Frequency**
- **Small, 6-Pin SOT23 and µDFN (MAX8570 Only) Packages**

Ordering Information

PART	TEMP RANGE	PIN-PACKAGE	TOP MARK
MAX8570ELT+T	-40°C to +85°C	6L µDFN	ACW
MAX8570EUT+T	-40°C to +85°C	6 SOT23	ABTJ
MAX8571EUT+T	-40°C to +85°C	6 SOT23	ABTK
MAX8572EUT+T	-40°C to +85°C	6 SOT23	ABTL
MAX8573EUT+T	-40°C to +85°C	6 SOT23	ABTM
MAX8574EUT+T	-40°C to +85°C	6 SOT23	ABTN
MAX8575EUT+T	-40°C to +85°C	6 SOT23	ABTO

+Denotes a lead(Pb)-free RoHS-compliant package.

T = Tape and reel.

Selector Guide

PART	CURRENT LIMIT	OUTPUT VOLTAGE
MAX8570	110mA	Adjustable
MAX8571	250mA	Adjustable
MAX8572	110mA	15V
MAX8573	250mA	15V
MAX8574	500mA	Adjustable
MAX8575	500mA	15V

Typical Operating Circuit

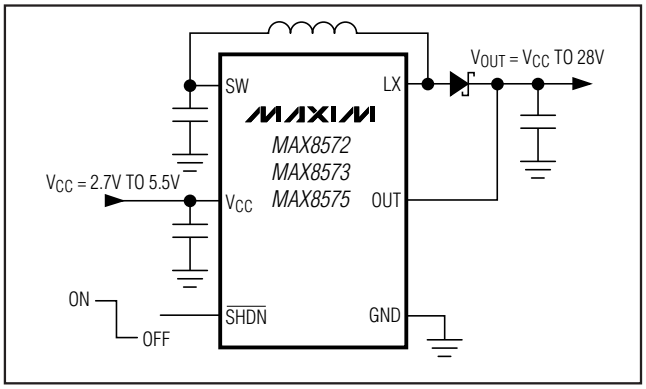

For pricing, delivery, and ordering information, please contact Maxim Direct at 1-888-629-4642, or visit Maxim's website at www.maxim-ic.com

High-Efficiency LCD Boost with True Shutdown

ABSOLUTE MAXIMUM RATINGS

V_{CC}, $\overline{SHDN}$ to GND .....-0.3V to +6V
SW to GND .....-0.3V to (V_{CC} + 0.3V)
FB to GND (MAX8570/MAX8571/MAX8574).....-0.3V to (V_{CC} + 0.3V)
OUT to GND (MAX8572/MAX8573/MAX8575).....-0.3V to +30V
LX to GND .....-0.3V to +30V
I_{LX}, I_{CC} 600mA

Continuous Power Dissipation (T_A = +70°C)
µDFN (derate 4.5 mW/°C above +70°C).....357.8mW
SOT23-6 (derate 8.7 mW/°C above +70°C).....695.7mW
Operating Temperature Range .....-40°C to +85°C
Junction Temperature.....+150°C
Storage Temperature Range .....-65°C to +150°C
Lead Temperature (soldering, 10s) .....+300°C

Stresses beyond those listed under "Absolute Maximum Ratings" may cause permanent damage to the device. These are stress ratings only, and functional operation of the device at these or any other conditions beyond those indicated in the operational sections of the specifications is not implied. Exposure to absolute maximum rating conditions for extended periods may affect device reliability.

ELECTRICAL CHARACTERISTICS

(V_{CC} = $V_{\overline{SHDN}}$ = 3.6V, SW open, V_{FB} = 1.3V (MAX8570/MAX8571/MAX8574) or V_{OUT} = 16V (MAX8572/MAX8573/MAX8575), T_A = -40°C to +85°C, unless otherwise noted. Typical values are at T_A = +25°C.) (Note 1)

PARAMETER	CONDITIONS		MIN	TYP	MAX	UNITS
V_{CC} Input Voltage Range			2.70		5.50	V
V_{CC} Undervoltage Lockout	V_{CC} rising, 50mV typical hysteresis		2.33	2.5	2.65	V
V_{CC} Supply Current				25	35	µA
V_{CC} Shutdown Current	$\overline{SHDN}$ = GND, V_{CC} = 5.5V	T_A = +25°C		0.05	1	µA
		T_A = -40°C to +85°C		0.05		
Line Regulation	Circuit of Figure 3, V_{OUT} = 15V, I_{LOAD} = 5mA, V_{CC} = 2.7V to 5.5V			0.1		%/V
Load Regulation	Circuit of Figure 3, V_{OUT} = 15V, I_{LOAD} = 0 to 5mA			0.1		%/mA
FB Regulation Voltage	T_A = 0°C to +85°C		1.216	1.226	1.236	V
	T_A = -40°C to +85°C		1.2137		1.2383	
FB Input Bias Current			-50	-4	+50	nA
OUT Regulation Voltage	T_A = 0°C to +85°C		14.85	15	15.15	V
	T_A = -40°C to +85°C		14.813		15.187	
OUT Input Bias Current	V_{OUT} = 15V			2.4	4.4	µA
LX Voltage Range					28	V
LX Switch Current Limit (Note 2)	MAX8571/MAX8573		0.217	0.241	0.267	A
	MAX8570/MAX8572		0.088	0.101	0.108	
	MAX8574/MAX8575		0.425	0.484	0.540	
LX On-Resistance	MAX8571/MAX8573/MAX8574/MAX8575, I_{LX} = 100mA			0.9	1.5	Ω
	MAX8570/MAX8572, I_{LX} = 50mA			1.5	2.4	
LX Leakage Current	V_{LX} = 28V	T_A = +25°C		0.01	2	µA
		T_A = -40°C to +85°C		0.05		
Maximum LX On-Time			8	11	14	µs
Minimum LX Off-Time	V_{FB} > 1V or V_{OUT} > 12.2V		0.8	1	1.2	µs
	V_{FB} = 0.25V or V_{OUT} = 3.4V		4.0	5	6.0	
Current-Limit Propagation Delay				55		ns
$\overline{SHDN}$ Low Level (V_{IL})	2.7V ≤ V_{CC} ≤ 5.5V				0.7	V
$\overline{SHDN}$ High Level (V_{IH})	4.2V ≤ V_{CC} ≤ 5.5V		1.5			V
	2.7V ≤ V_{CC} < 4.2V		1.4			
$\overline{SHDN}$ Leakage Current			-1		+1	µA

ELECTRICAL CHARACTERISTICS (continued)

(V_{CC} = $V_{\overline{SHDN}}$ = 3.6V, SW open, V_{FB} = 1.3V (MAX8570/MAX8571/MAX8574) or V_{OUT} = 16V (MAX8572/MAX8573/MAX8575), T_A = -40°C to +85°C, unless otherwise noted. Typical values are at T_A = +25°C.) (Note 1)

PARAMETER	CONDITIONS		MIN	TYP	MAX	UNITS
SW PMOS Current Limit	V_{CC} = 3.6V, V_{SW} = 0V, V_{FB} = 0V, I_{CC} (peak)		0.45	0.75	1.10	A
	V_{CC} = 3.6V, V_{SW} = 0V, V_{FB} = 0V, I_{CC} (average)		0.15	0.30	0.60	
SW PMOS On-Resistance	V_{CC} = 2.7V, V_{FB} = 0V, I_{SW} = 100mA			1.5	2.5	Ω
SW PMOS Leakage Current	SW = GND, V_{CC} = 5.5V, V_{FB} = 0V	T_A = +25°C		0.01	1	µA
		T_A = -40°C to +85°C		0.02		
SW Soft-Start Time	V_{CC} = 2.7V, C_{SW} = 4.7µF			0.2	1	ms

Note 1: Parameters are production tested at T_A = +25°C. Limits over temperature are guaranteed by design.

Note 2: Specified currents are measured at DC. Actual LX current limits are slightly higher in circuit due to current-limit comparator delay. Actual currents (with 2µH) are 110mA (MAX8570/MAX8572), 250mA (MAX8571/MAX8573), and 500mA (MAX8574/MAX8575).

Typical Operating Characteristics

(MAX8571, V_{CC} = 3.6V, V_{OUT} = 18V, Circuit of Figure 2, T_A = +25°C, unless otherwise noted.)

OUTPUT VOLTAGE vs. SUPPLY VOLTAGE (MAX8571)

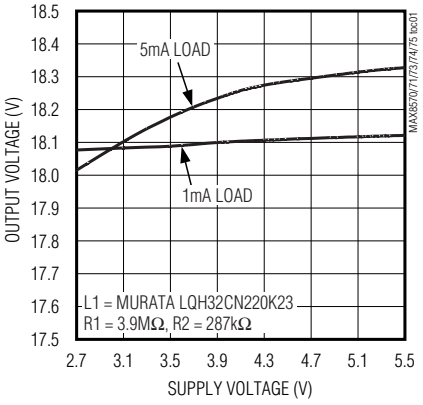

OUTPUT VOLTAGE vs. SUPPLY VOLTAGE (FIGURE 3, MAX8573)

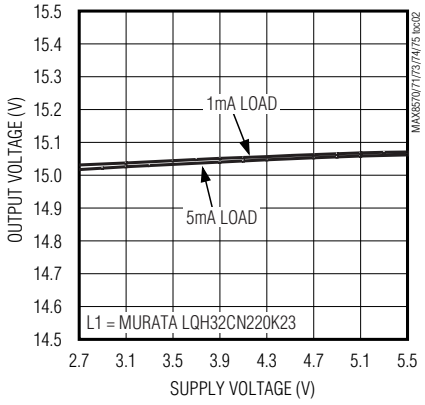

OUTPUT VOLTAGE vs. SUPPLY VOLTAGE (MAX8574)

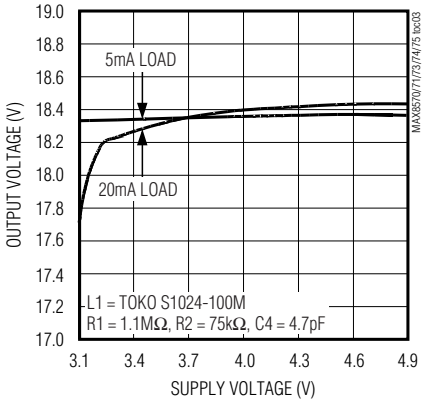

OUTPUT VOLTAGE vs. LOAD CURRENT

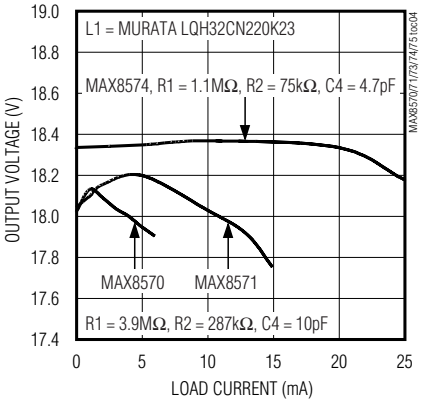

OUTPUT VOLTAGE vs. TEMPERATURE

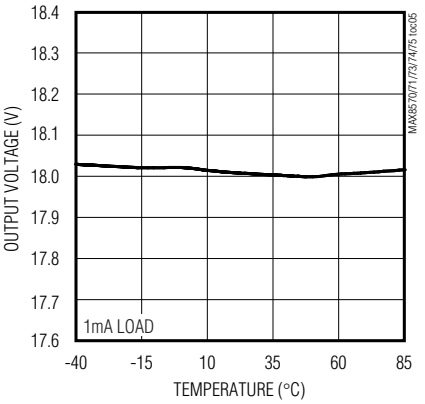

EFFICIENCY vs. SUPPLY VOLTAGE

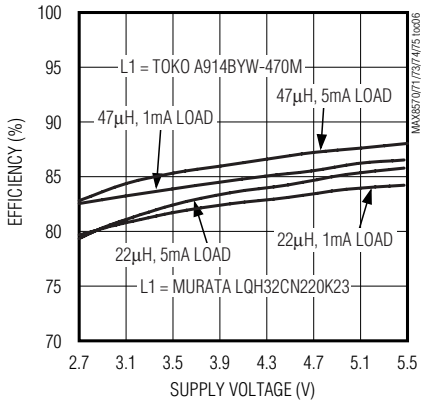

High-Efficiency LCD Boost with True Shutdown

Typical Operating Characteristics (continued)

(MAX8571, V_{CC} = 3.6V, V_{OUT} = 18V, Circuit of Figure 2, T_A = +25°C, unless otherwise noted.)

EFFICIENCY vs. BATTERY VOLTAGE (FIGURE 4)

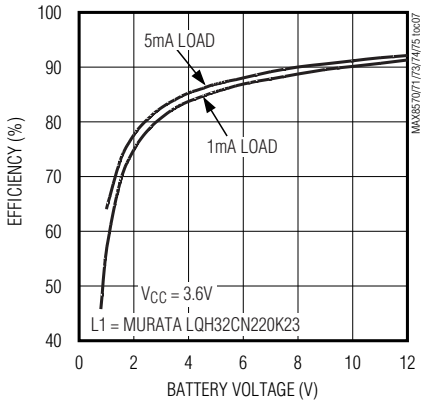

EFFICIENCY vs. LOAD CURRENT WITH 22µH INDUCTOR

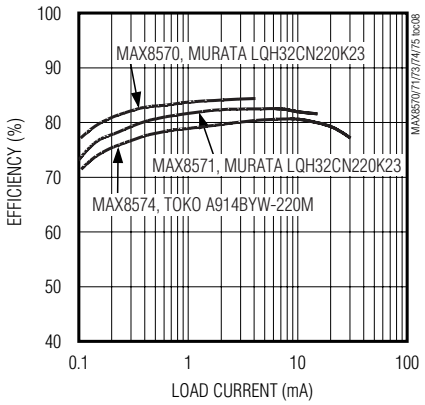

EFFICIENCY vs. LOAD CURRENT WITH 47µH INDUCTOR

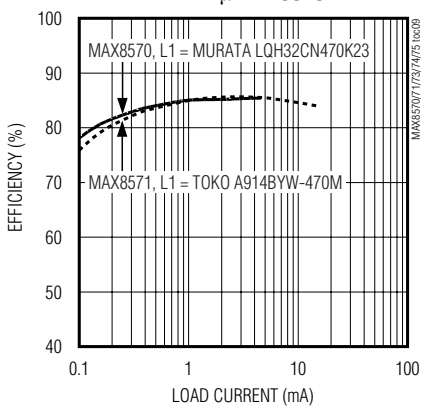

PEAK INDUCTOR CURRENT LIMIT vs. SUPPLY VOLTAGE

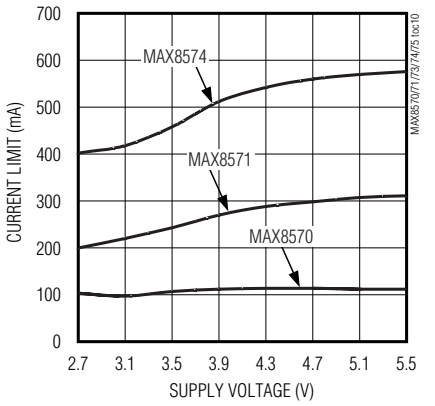

SUPPLY CURRENT vs. LOAD CURRENT

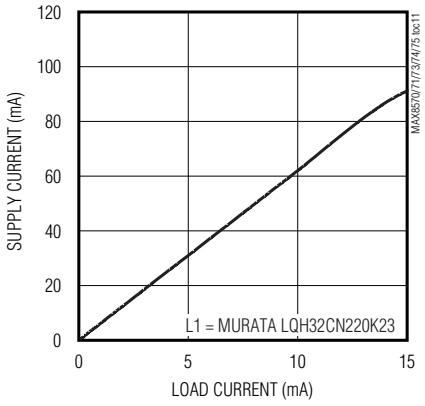

NO-LOAD CURRENT vs. SUPPLY VOLTAGE

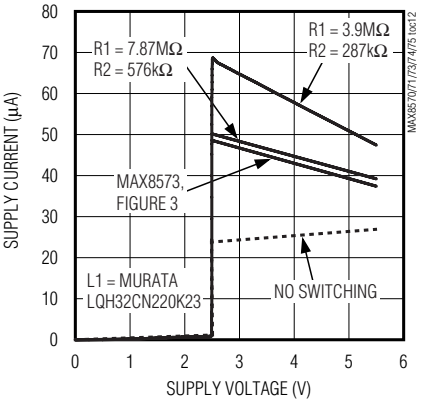

LINE TRANSIENT 3V TO 5.5V (MAX8571)

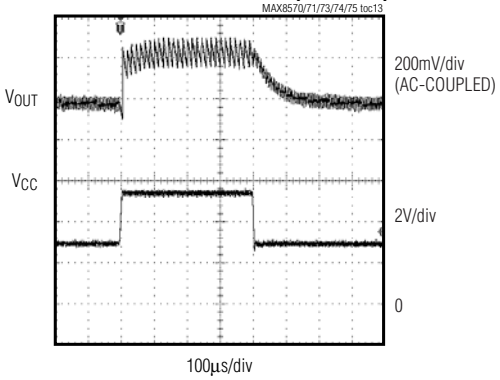

3.6kΩ LOAD, R1 = 3.9MΩ, R2 = 287kΩ

LINE TRANSIENT 3V TO 5.5V (FIGURE 3, MAX8573)

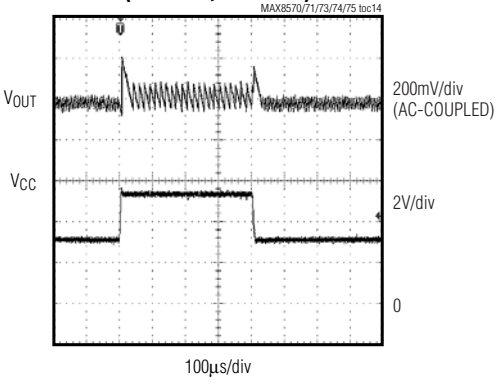

3kΩ LOAD

Typical Operating Characteristics (continued)

(MAX8571, V_{CC} = 3.6V, V_{OUT} = 18V, Circuit of Figure 2, T_A = +25°C, unless otherwise noted.)

LOAD TRANSIENT

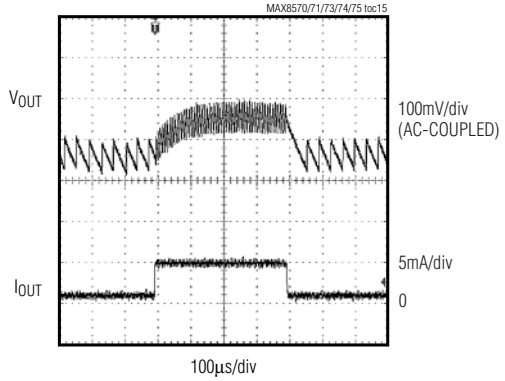

STARTUP AND SHUTDOWN WAVEFORMS

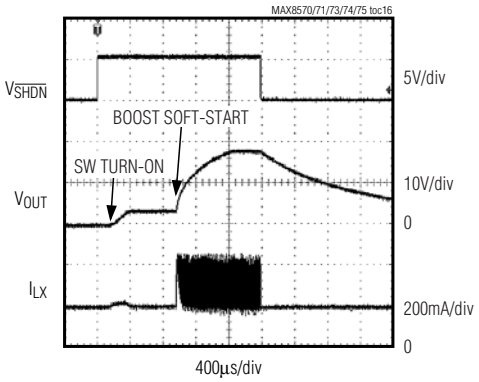

Pin Description

PIN			NAME	FUNCTION
MAX8570 (µDFN)	MAX8570/ MAX8571/ MAX8574 (SOT23)	MAX8572/ MAX8573/ MAX8575 (SOT23)		
3	1	—	FB	Feedback for Setting the Output Voltage. Connect FB to the center of a resistor voltage-divider from the output to GND to set positive output voltages.
—	—	1	OUT	Output. The output voltage is preset to 15V. Connect a 1µF ceramic capacitor from OUT to GND. In shutdown, OUT is pulled to GND by an internal 7.5mΩ resistor.
2	2	2	GND	Ground
1	3	3	$\overline{SHDN}$	Shutdown Input. A logic-low at $\overline{SHDN}$ places the part in low-power shutdown mode. Pull $\overline{SHDN}$ high or connect to V_{CC} for normal operation.
6	4	4	LX	Inductor Switching Connection
5	5	5	SW	Isolation Switch Output. Internally connected to the drain of a p-channel MOSFET used to isolate the output from the input during shutdown. Connect a 4.7µF ceramic capacitor from SW to GND. If true shutdown is not required, SW can be left open with the input supply connected directly to the inductor.
4	6	6	V_{CC}	Input Voltage Supply. Connect a 2.7V to 5.5V input supply to V_{CC}. Connect a 1µF ceramic capacitor from V_{CC} to GND.

High-Efficiency LCD Boost with True Shutdown

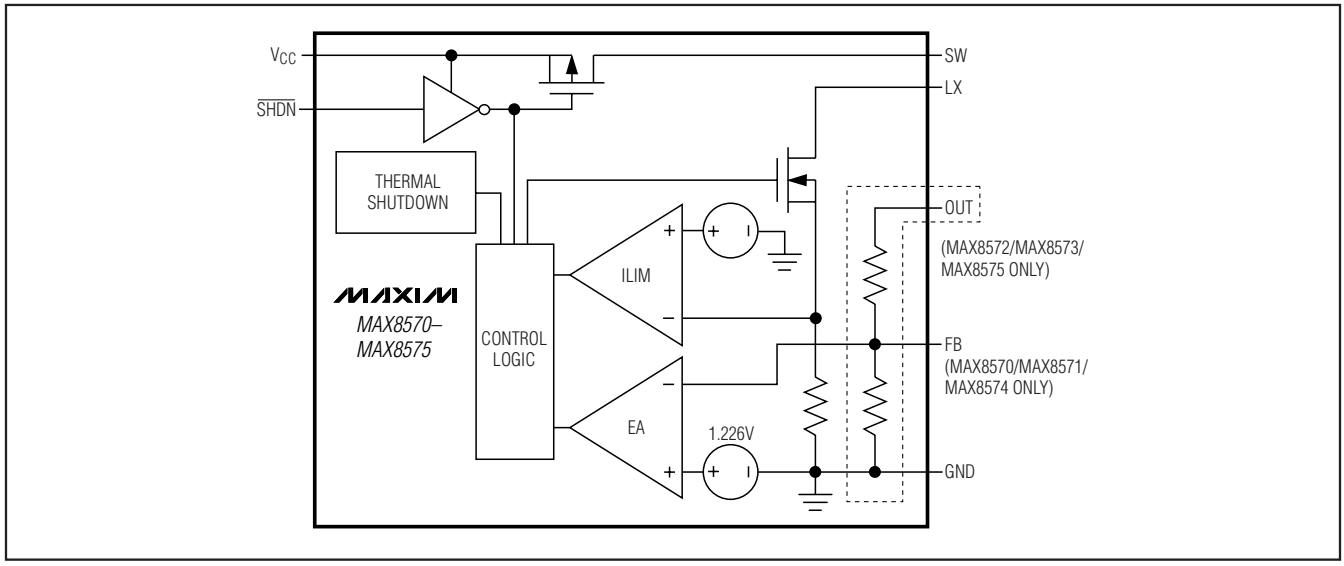

Figure 1. Functional Diagram

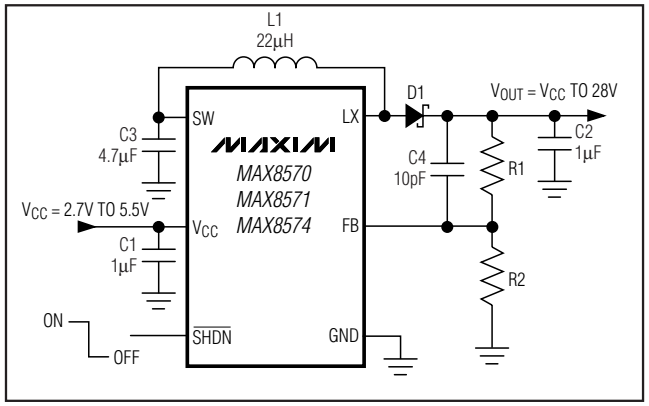

Figure 2. Typical Application Circuit with Adjustable Output Voltage

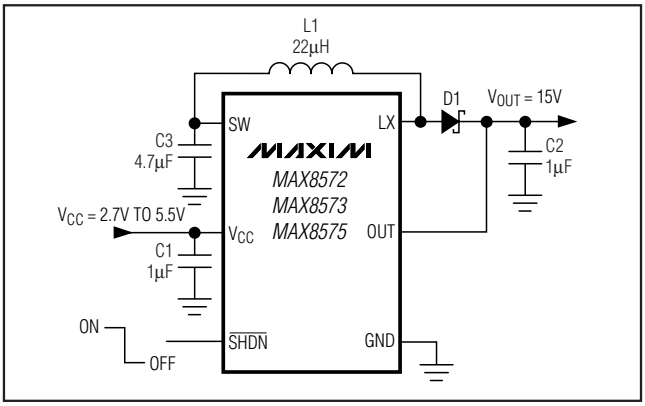

Figure 3. Typical Application Circuit with 15V Preset Output Voltage

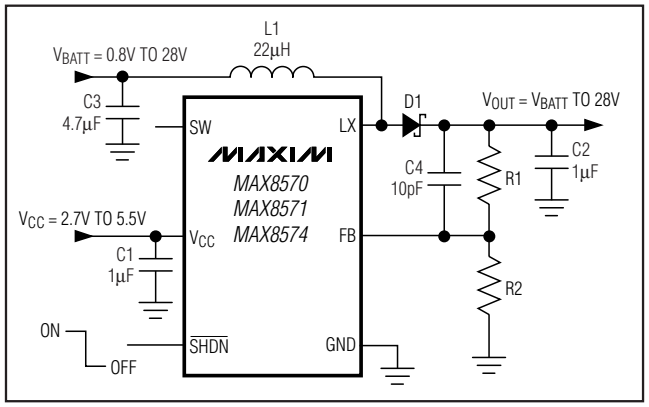

Figure 4. Using a Separate Input Supply for the Inductor

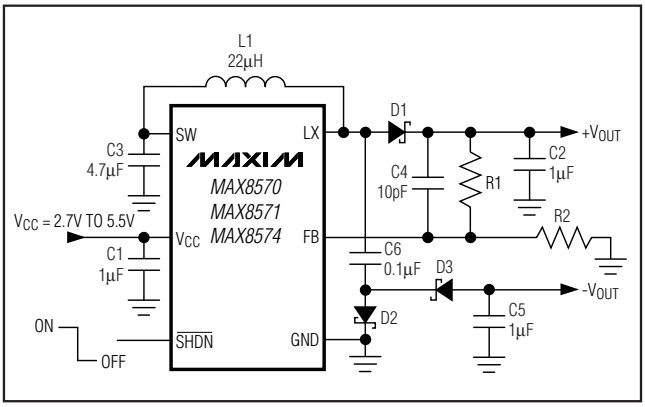

Figure 5. Negative Output Voltage for LCD Bias

Detailed Description

The MAX8570 family of compact, step-up DC-DC converters operate from a 2.7V to 5.5V supply. Consuming only 25µA of supply current, these ICs include an internal MOSFET switch with a low on-resistance. A true-shutdown feature disconnects the battery from the load and reduces the supply current to 0.05µA (typ). These DC-DC converters are available with either a fixed 15V output or are adjustable up to 28V. Three current-limit options are available: 110mA, 250mA, and 500mA. See the *Selector Guide* on page 1.

Control Scheme

The MAX8570 family features a minimum off-time current-limited control scheme operating in discontinuous mode. An internal p-channel MOSFET switch connects V_{CC} to SW to provide power to the inductor when the converter is operating. When the converter is shut down, this switch disconnects the input supply from the inductor (see Figure 1).

To boost the output voltage, an n-channel MOSFET switch turns on and allows current to ramp up in the inductor. Once this current reaches the current limit, the switch turns off and the inductor current flows through D1 to supply the output. The switching frequency varies depending on the load and input voltage and can be up to 800kHz.

Setting the Output Voltage

The output voltage of the MAX8570, MAX8571, and MAX8574 is adjustable from V_{CC} to 28V by using a resistor voltage-divider (see Figure 2). Select R2 from 10kΩ to 600kΩ and calculate R1 with the following equation:

$$R1 = R2\left(\frac{V_{OUT}}{V_{FB}} - 1\right)$$

where V_{FB} = 1.226V and V_{OUT} can range from V_{CC} to 28V. For best accuracy, ensure that the bias current through the feedback resistors is at least 2µA.

The MAX8572, MAX8573, and MAX8575 have a fixed 15V output. When using these parts, connect OUT directly to the output (see Figure 3).

Shutdown ($\overline{SHDN}$)

Drive $\overline{SHDN}$ low to enter shutdown. During shutdown the supply current drops to 0.05µA (typ), the output is disconnected from the input, and LX enters a high-impedance state. The capacitance and load at the output determine the rate at which V_{OUT} decays. $\overline{SHDN}$ can be pulled as high as 6V regardless of the input and output voltages.

With a typical step-up converter circuit, the output remains connected to the input through the inductor and output rectifier, holding the output voltage to one diode drop below V_{CC} when the converter is shut down and allowing the output to draw power from the input. The MAX8570 family features true-shutdown mode, disconnecting the output from the input with an internal p-channel MOSFET switch when shut down. This eliminates power draw from the input during shutdown.

Soft-Start

The MAX8570 family uses two soft-start mechanisms. When the true-shutdown feature is used (SW is connected as in Figure 2 and Figure 3), the gate of the internal high-side p-channel switch turns on slowly to prevent inrush current. This takes approximately 200µs. When SW is fully turned on, the internal n-channel switch begins boosting the input to set the output voltage. When V_{FB} is less than 0.5V (with or without the use of true shutdown), the minimum off-time of the internal n-channel switch increases from 1µs to 5µs to control inrush current.

Separate Power for Inductor

Separate power supplies can be used for the IC and the inductor. This allows power to be used from a battery or supply with a voltage as low as 0.8V, or higher than the V_{CC} operating range of the converter. When using a separate inductor supply, SW is left unconnected and the supply is connected directly to the inductor (see Figure 4). Note that in this configuration the output is no longer disconnected from the input during shutdown. In shutdown the output voltage goes to a diode drop below the inductor supply voltage.

Protection Features

The MAX8570 family has protection features designed to make it extremely robust to application errors (see Table 1). If the output capacitor in the application is missing, the MAX8570 family protects the internal switch from being damaged. If the top feedback resistor or the external diode is disconnected, the converter stops switching and the output is resistively loaded to ground. Similarly, if the external diode polarity is reversed, the converter discontinues switching. If the bottom feedback resistor is missing, the output stays at a diode drop less than the inductor supply voltage or 1.226V (whichever is greater). In fact, in response to most fault conditions, the MAX8570 family protects not only itself, but also the downstream circuitry.

High-Efficiency LCD Boost with True Shutdown

Table 1. Protection Features

COMMON APPLICATION FAULTS	RESULT WITH COMPETING STEP-UP CONVERTERS	RESULT WITH MAX8570 FAMILY
OUT to FB resistor missing or disconnected.	OUT voltage rises until the output capacitor is destroyed and/or downstream components are damaged.	Converter stops switching.
Output cap missing and FB open.	OUT voltage rises until the output capacitor is destroyed and/or downstream components are damaged.	LX may boost one or two times before the FB voltage exceeds the trip point. In the rare case where the capacitive loading and external loading on OUT is small enough that the energy in one cycle can slew it more than 50V, the internal MOSFET will clamp between 35V and 70V (nondestructively).
FB shorted to GND.	OUT voltage rises until the output capacitor is destroyed and/or downstream components are damaged.	Converter stops switching and OUT is resistively loaded to GND.
Diode missing or disconnected. Diode reverse polarity.	Inductor energy forces LX node high, possibly damaging the internal switch.	OUT is resistively loaded to GND and the converter stops switching.
FB node open.	Unpredictable, possibly boosting output voltage beyond acceptable design range.	FB node driven above its regulation point, the converter stops switching, and OUT is resistively loaded to GND.
OUT shorted to ground.	Current ramps up through inductor and diode, generally destroying one of the devices.	True off-switch detects short, opens when current reaches pMOS current limit, and restarts soft-start. This protects the inductor and diode.

Design Procedure

Inductor Selection

Smaller inductance values typically offer smaller physical size for a given series resistance or saturation current. Circuits using larger inductance values may provide more output power. The inductor's saturation current rating should be greater than the peak switching current. Recommended inductor values range from 10µH to 100µH.

Selecting the Current Limit

The peak LX current limit ($I_{LX(MAX)}$) required for the application is calculated from the following equation:

$$I_{LX(MAX)} \geq 1.25 \times \frac{P_{OUT(MAX)}}{V_{BATT(MIN)}} + \sqrt{\left(1.25 \times \frac{P_{OUT(MAX)}}{V_{BATT(MIN)}}\right)^2 + 3\mu s \times \frac{P_{OUT(MAX)}}{L}}$$

where $P_{OUT(MAX)}$ is the maximum output power required by the load and $V_{BATT(MIN)}$ is the minimum supply voltage used to supply the inductor (this is V_{CC} unless a separate supply is used for the inductor). The IC current limit must be greater than this calculated value. See the *Selector Guide* on page 1 for selecting the IC with the correct current limit.

Diode Selection

The high switching frequency of up to 800kHz requires a high-speed rectifier. Schottky diodes are recommended due to their low forward-voltage drop. To maintain high efficiency, the average current rating of the diode should be greater than the peak switching current. Choose a reverse breakdown voltage greater than the output voltage.

Capacitors

Small ceramic surface-mount capacitors with X7R or X5R temperature characteristics are recommended due to their small size, low cost, low equivalent series resistance (ESR), and low equivalent series inductance (ESL). If nonceramic capacitors are used, it is important that they have low ESR to reduce the output ripple voltage and peak-peak load-transient voltage.

For most applications, use a 1µF ceramic capacitor for the output and V_{CC} bypass capacitors. For SW or the inductor supply, a 4.7µF or greater ceramic capacitor is recommended.

For the MAX8570/MAX8571/MAX8574 a feed-forward capacitor (C4 in Figures 2 and 3) connected from the output to FB improves stability over a wide range of battery voltages. A 10pF capacitor is recommended for the MAX8571 and MAX8574. A 10pF to 47pF capacitor is recommended for the MAX8570. Note that increasing C4 degrades line and load regulation.

Applications Information

Negative Output Voltage for LCD Bias

A negative output voltage can be generated by adding a diode/capacitor charge pump as shown in Figure 5. In this configuration, the negative output is lower in magnitude than the positive output by a forward diode drop. If there is little or no load on the positive output, the negative output drifts from its nominal voltage. To prevent this, it may be necessary to preload the positive output with a few hundred microamps, which can be done by selecting lower than normal values of R1 and R2.

PC Board Layout

Careful printed circuit layout is important for minimizing ground bounce and noise. Keep the GND pin and ground pads for the input and output capacitors as close together as possible. Keep the connection to LX as short as possible. Locate the feedback resistors as close as possible to the FB pin and keep the feedback traces routed away from noisy areas such as LX. Refer to the MAX8571EVKIT for a layout example.

High-Efficiency LCD Boost with True Shutdown

Pin Configurations (continued)

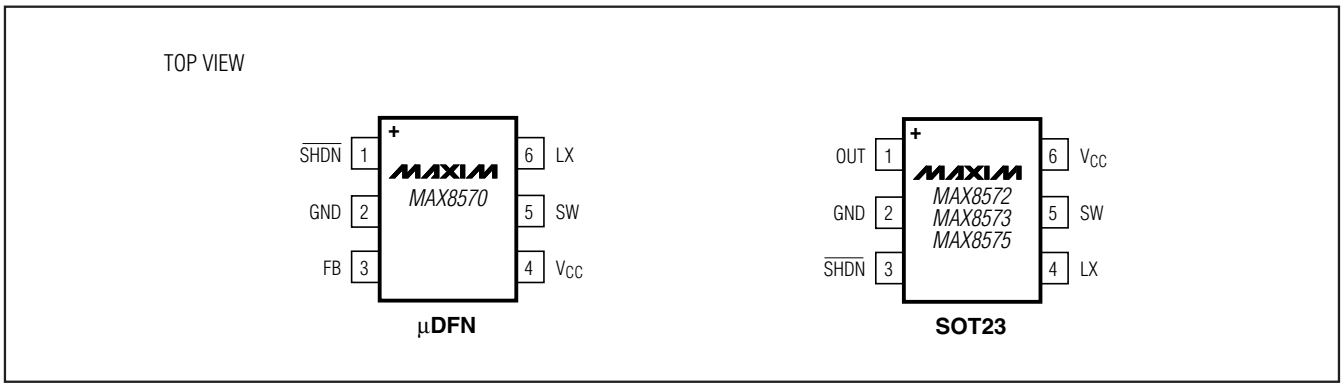

Chip Information

PROCESS: BiCMOS

Package Information

For the latest package outline information and land patterns, go to **www.maxim-ic.com/packages**.

PACKAGE TYPE	PACKAGE CODE	DOCUMENT NO.
6L µDFN	L622+1	**21-0164**
6 SOT23	U6SN+1	**21-0058**

Revision History

REVISION NUMBER	REVISION DATE	DESCRIPTION	PAGES CHANGED
2	8/09	Added µDFN package	1, 2, 5, 9, 10

Maxim cannot assume responsibility for use of any circuitry other than circuitry entirely embodied in a Maxim product. No circuit patent licenses are implied. Maxim reserves the right to change the circuitry and specifications without notice at any time.

© 2009 Maxim Integrated Products Maxim is a registered trademark of Maxim Integrated Products, Inc.