19-2803; Rev 1; 8/07

MAX7443 Evaluation Kit

Evaluates: MAX7443/MAX7444

General Description

The MAX7443 evaluation kit (EV kit) evaluates the MAX7443, a low-cost triple-channel video reconstruction filter for composite and S-video applications. The EV kit operates from a single 5V supply. The MAX7443 EV kit can also be used to evaluate the MAX7444, a similar device with a high-frequency boost option.

Component List

DESIGNATION	QTY	DESCRIPTION
C1	1	1µF ±20%, 6.3V X5R ceramic capacitor (0603) Murata GRM188R60J106K TDK C1608X5R0J105K
C2, C6, C7	3	0.1µF ±10%, 16V X7R ceramic capacitors (0603) Murata GRM188R71C104K TDK C1608X7R1C104KT
C3, C4, C5	3	220µF ±20%, 6.3V aluminum electrolytic capacitors (6.3mm x 6.0mm) SANYO 6EV220AX
JU1, JU2, JU3	3	3-pin headers
JU4, JU5	2	2-pin headers
R1–R5	5	75Ω ±1% resistors (0603)
R6, R7	2	200Ω ±1% resistors (0603)
R8, R9	2	162Ω ±1% resistors (0603)
U1	1	Maxim triple-channel video reconstruction filter and buffer for composite and Y/C outputs MAX7443ESA+ (8-pin SO-EP)
YIN, CIN, YOUT, CVOUT, COUT	5	BNC PCB mount connectors
—	5	Shunts
—	1	PCB: MAX7443 Evaluation Kit+

Features

- **5V Single Supply**
- **Compatible with Standard Video Test Equipment**
- **Surface-Mount Construction**
- **Fully Assembled and Tested**

Ordering Information

PART	TYPE
MAX7443EVKIT+	EV Kit

+Denotes lead-free and RoHS-compliant.

Note: *To evaluate the other device in the family, the MAX7444, request a free MAX7444ESA+ sample with the MAX7443 EV kit.*

Quick Start

Recommended equipment

Before beginning, the following equipment is needed:

- Single 5V DC power supply
- Video signal generator (e.g., Tektronix TG 2000)
- Video measurement equipment (e.g., Tektronix VM 700A)

Procedure

The MAX7443 EV kit is a fully assembled and tested surface-mount board. Utilize the following steps to verify the board operation. **Caution: Do not turn on the power supply until all connections are completed:**

1) Verify that there are shunts installed on JU1 and JU3 (pins 1-2) and JU2 (pins 2-3).
2) Verify that there are shunts across jumpers JU4 and JU5.
3) Connect the luma output from the video signal generator to the YIN BNC connector on the EV kit.
4) Connect the chroma output from the video signal generator to the CIN BNC connector on the EV kit.
5) Connect the input of the video measurement equipment to the YOUT, COUT, or CVOUT BNC connectors on the EV kit.

Component Suppliers

SUPPLIER	PHONE	WEBSITE
Murata Mfg. Co., Ltd.	770-436-1300	www.murata.com
SANYO NA Corp.	619-661-6322	www.sanyo.com
TDK Corp.	847-803-6100	www.component.tdk.com

Note: *Indicate that you are using the MAX7443/MAX7444 when contacting these component suppliers.*

For pricing, delivery, and ordering information, please contact Maxim Direct at 1-888-629-4642, or visit Maxim's website at www.maxim-ic.com.

6) Connect the 5V supply to the PCB pad labeled VCC. Connect the pad labeled GND to the ground of the power supply.
7) Set the signal generator for the desired video signal, such as multiburst.
8) Turn on the 5V DC power supply.
9) Analyze any of the output signals with the VM700A video measurement.

Detailed Description

Jumper Selection

The MAX7443 EV kit provides options for evaluation with a video signal generator output or a current output video DAC (encoder). Table 1 lists the jumper settings for selecting the input from either a video generator or a DAC (encoder). When interfacing to a video DAC or encoder output, the 200Ω termination resistor is provided on the board and selected by changing jumpers JU1 and JU3. A typical DAC termination resistor is 200Ω. If the full-scale DAC output current is different than ≈5mA, change the 200Ω resistor accordingly to get 1V at the input of the MAX7443.

The MAX7443 EV kit incorporates jumper JU2 to control the gain setting. Table 2 lists the JU2 functions.

Evaluating MAX7444

The MAX7443 EV kit can be also used to evaluate the MAX7444. To evaluate the MAX7444, replace the MAX7443ESA+ with a MAX7444ESA+.

Table 1. Jumpers JU1, JU3, JU4, and JU5 Functions

JU1 SHUNT POSITION	JU3 SHUNT POSITION	INPUT TERMINATION (Ω)
1-2*	1-2*	75
2-3	2-3	200
All other combinations		Undefined

**Default position.*

Note: *To emulate a 200Ω DAC source resistor when driving from a 75Ω generator, remove jumpers JU4 and JU5. The 162Ω resistor added to the standard 75Ω termination equals approximately 200Ω.*

Table 2. JU2 Functions

JU2 SHUNT POSITION	GSET PIN	GAIN (dB)
1-2	Connected to VCC	9.5
2-3	Connected to GND	6
Not installed	Not connected	12

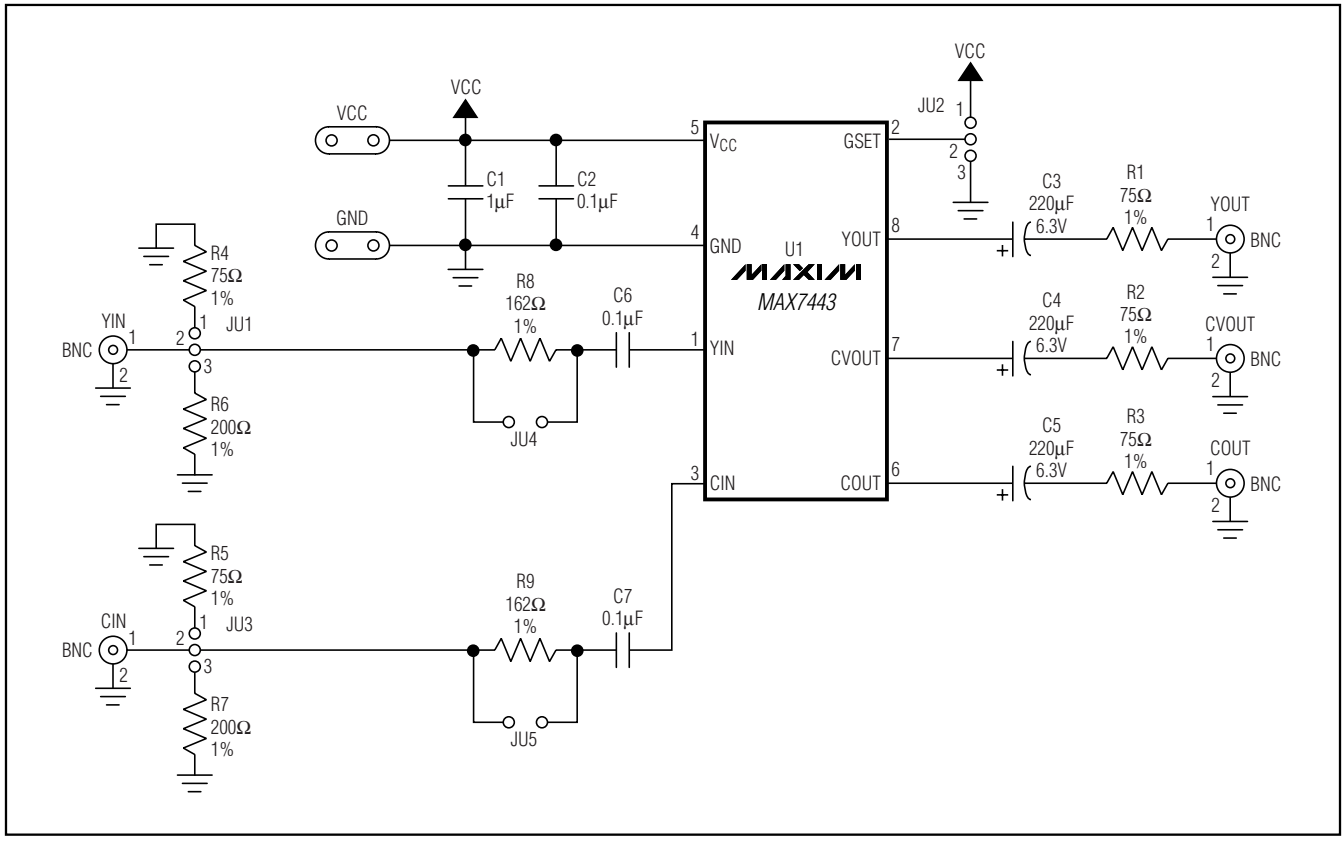

Figure 1. MAX7443 EV Kit Schematic

MAX7443 Evaluation Kit

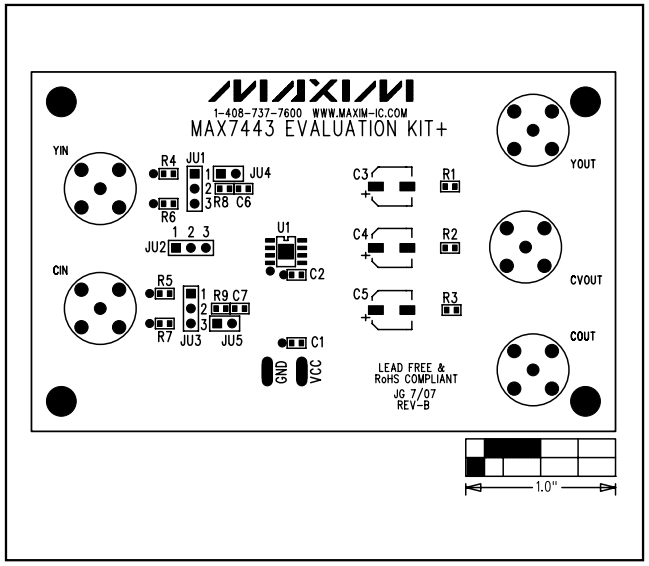

Figure 2. MAX7443 EV Kit Component Placement Guide—Top Silkscreen

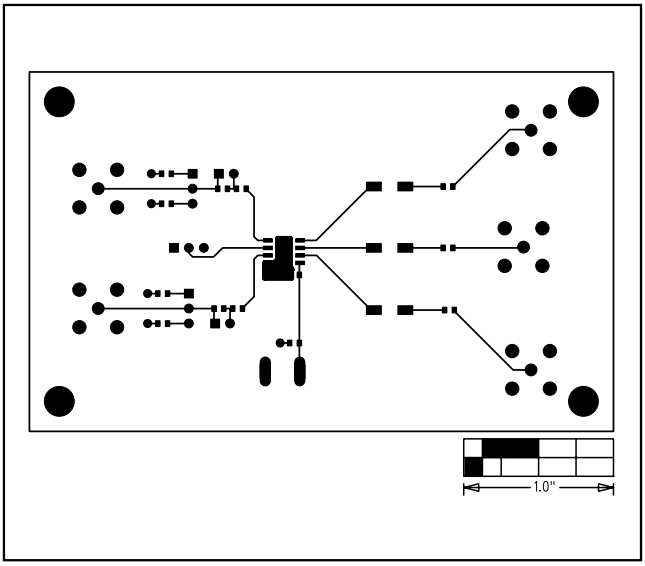

Figure 3. MAX7443 EV Kit PCB Layout—Component Side

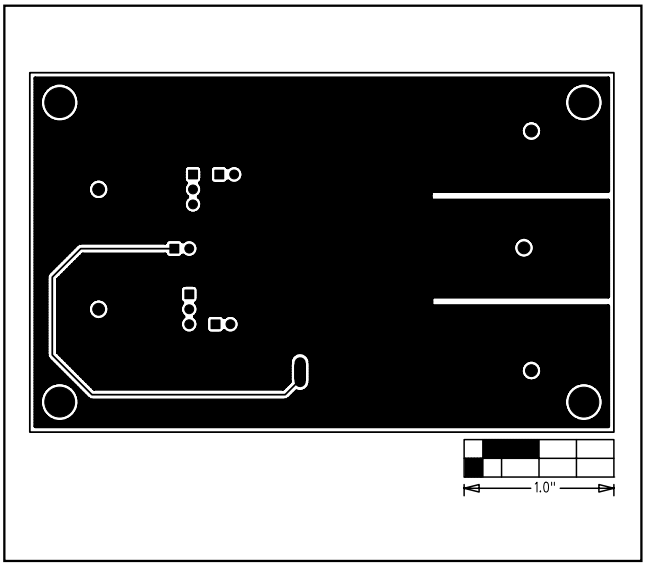

Figure 4. MAX7443 EV Kit PCB Layout—Solder Side

Revision History

Pages changed at Rev 1: 1–4

Maxim cannot assume responsibility for use of any circuitry other than circuitry entirely embodied in a Maxim product. No circuit patent licenses are implied. Maxim reserves the right to change the circuitry and specifications without notice at any time.

© 2007 Maxim Integrated Products MAXIM is a registered trademark of Maxim Integrated Products, Inc.