Click here for production status of specific part numbers.

MAX7360

I²C-Interfaced Key-Switch Controller and LED Driver/GPIOs with Integrated ESD Protection

General Description

The MAX7360 I²C-interfaced peripheral provides microprocessors with management of up to 64 key switches, with an additional eight LED drivers/GPIOs that feature constant-current, PWM intensity control, and rotary switch control options.

The key-switch drivers interface with metallic or resistive switches with on-resistances up to 5kΩ. Key inputs are monitored statically, not dynamically, to ensure low-EMI operation. The MAX7360 features autosleep and autowake modes to further minimize the power consumption of the device. The autosleep feature puts the device in a low-power state (1µA, typ) after a sleep timeout period. The autowake feature configures the MAX7360 to return to normal operating mode from sleep upon a keypress.

The key controller debounces and maintains a FIFO of keypress and release events (including autorepeat, if enabled). An interrupt ($\overline{INTK}$) output can be configured to alert keypresses, as they occur, or at maximum rate.

There are eight open-drain I/O ports, which can be used to drive LEDs. The maximum constant-current level for each open-drain port is 20mA. The intensity of the LED on each open-drain port can be individually adjusted through a 256-step PWM control. An input port pair (PORT6, PORT7) can be configured to accept 2-bit gray code inputs from a rotary switch. In addition, if not used for key-switch control, up to six column pins can be used as general-purpose open-drain outputs (GPOs) for LED drive or logic control.

The MAX7360 is offered in a 40-pin (5mm x 5mm) thin QFN package with an exposed pad, and a small 36-bump wafer level package (WLP) for cell phones, pocket PCs, and other portable consumer electronic applications. The MAX7360 operates over the -40°C to +85°C extended temperature range.

Applications

- Cell Phones
- PDAs
- Handheld Games
- Portable Consumer Electronics
- Printers
- Instrumentation

Features

- Integrated ESD Protection
  - ±8kV IEC 61000-4-2 Contact Discharge
  - ±15kV IEC 61000-4-2 Air-Gap Discharge
- +14V Tolerant, Open-Drain I/O Ports Capable of Constant-Current LED Drive
- Rotary Switch-Capable Input Pair (PORT6, PORT7)
- 256-Step PWM Individual LED Intensity Control
- Individual LED Blink Rates and Common LED Fade In/Out Rates from 256ms to 4096ms
- FIFO Queues Up to 16 Debounced Key Events
- User-Configurable Key Debounce (9ms to 40ms)
- Keyscan Uses Static Matrix Monitoring for Low EMI Operation
- +1.62V to +3.6V Operation
- Monitors Up to 64 Keys
- Key-Switch Interrupt (INTK) on Each Debounced Event/FIFO Level, or End of Definable Time Period
- Port Interrupt (INTI) for Input Ports for Special-Key Functions
- 400kbps, +5.5V Tolerant 2-Wire Serial Interface with Selectable Bus Timeout
- Four I²C Address Choices

Ordering Information

PART	TEMP RANGE	PIN-PACKAGE
MAX7360ETL+	-40°C to +85°C	40 TQFN-EP*
MAX7360EWX+	-40°C to +85°C	36 WLP

+Denotes a lead(Pb)-free/RoHS-compliant package.
**EP = Exposed pad.*

Simplified Block Diagram

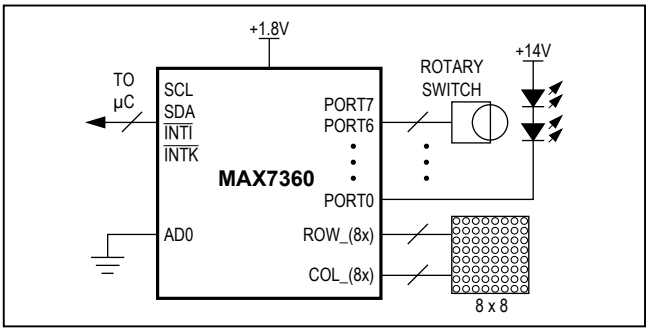

Absolute Maximum Ratings

V_{CC} to GND .....-0.3V to +4V
COL0–COL7, ROW0–ROW7 to GND .....-0.3V to +4V
SDA, SCL, AD0, INTI, INTK to GND.....-0.3V to +6V
PORT0–PORT7 to GND .....-0.3V to +16V
All Other Pins to GND .....-0.3V to (V_{CC} + 0.3V)
DC Current on PORT0–PORT7, COL2–COL7 .....25mA
GND Current 80mA
Continuous Power Dissipation (T_A = +70°C)
TQFN (derate 22.2mW/NC above +70°C) 1777mW
WLP (derate 21.7mW/NC above +70°C) 1739mW
Operating Temperature Range..... -40°C to +85°C
Junction Temperature.....+150°C
Storage Temperature Range..... -65°C to +150°C
ESD Protection
Human Body Model (R_D = 1.5kΩ, C_S = 100pF)
All Pins.....±2kV
IEC 61000-4-2 (R_D = 330Ω, C_S = 150pF)
Contact Discharge
ROW0–ROW7, COL0–COL7, PORT0–PORT7 to GND ....±8kV
Air-Gap Discharge
ROW0–ROW7, COL0–COL7, PORT0–PORT7 to GND ...±15kV
Lead Temperature (TQFN only; soldering, 10s).....+300°C
Soldering Temperature (reflow).....+260°C

Stresses beyond those listed under "Absolute Maximum Ratings" may cause permanent damage to the device. These are stress ratings only, and functional operation of the device at these or any other conditions beyond those indicated in the operational sections of the specifications is not implied. Exposure to absolute maximum rating conditions for extended periods may affect device reliability.

Package Thermal Characteristics (Note 1)

TQFN
Junction-to-Ambient Thermal Resistance (θ_{JA}) .....45°C/W
Junction-to-Case Thermal Resistance (θ_{JC}).....2°C/W

WLP
Junction-to-Ambient Thermal Resistance (θ_{JA})WLP .... 46°C/W

Note 1: Package thermal resistances were obtained using the method described in JEDEC specification JESD51-7, using a four-layer board. For detailed information on package thermal considerations, refer to **www.maximintegrated.com/thermal-tutorial**.

Electrical Characteristics

(V_{CC} = +1.62V to +3.6V, T_A = -40°C to +85°C, unless otherwise noted. Typical values are at V_{CC} = +3.3V, T_A = +25°C.) (Notes 2, 3)

PARAMETER	SYMBOL	CONDITIONS	MIN	TYP	MAX	UNITS
Operating Supply Voltage	V_{CC}		1.62	3.3	3.6	V
External Supply Voltage PORT0–PORT7	$V_{PORT_}$				14	V
Operating Supply Current	I_{CC}	All key switches open, oscillator running, COL2–COL7 configured as key switches, $V_{PORT_}$ = V_{CC}		34	50	µA
		N keys pressed		34 + 20 x N		
Sleep-Mode Supply Current	I_{SL}			1.3	3	µA
Key-Switch Source Current	I_{KEY}			20	35	µA
Key-Switch Source Voltage	V_{KEY}			0.43	0.5	V
Key-Switch Resistance	R_{KEY}	(Note 4)			5	kΩ
Startup Time from Shutdown	t_{START}			2	2.4	ms
Output Low Voltage COL2–COL7	V_{OL}	I_{SINK} = 10mA			0.5	V
Oscillator Frequency (PWM Clock)	f_{OSC}	T_A = +25°C, V_{CC} = +2.61V	125	128	131	kHz
		T_A = T_{MIN} to T_{MAX}, V_{CC} ≤ 3.6V	102		164	
Oscillator Frequency Variation	Δf_{OSC}	T_A = +25°C	-7		+14	%
Key-Scan Frequency	f_{KEY}	Derived from oscillator clock		64		kHz

Electrical Characteristics (continued)

(V_{CC} = +1.62V to +3.6V, T_A = -40°C to +85°C, unless otherwise noted. Typical values are at V_{CC} = +3.3V, T_A = +25°C.) (Notes 2, 3)

PARAMETER	SYMBOL	CONDITIONS	MIN	TYP	MAX	UNITS
GPIO SPECIFICATIONS						
Input High Voltage PORT0–PORT7	V_{IH}		0.7 x V_{CC}			V
Input Low Voltage PORT0–PORT7	V_{IL}				0.3 x V_{CC}	V
Input Leakage Current PORT0–PORT7	I_{IN}	$V_{IN} \le V_{CC}$	-0.25		+0.25	µA
		$V_{CC} < V_{IN}$	-1		+5	
Output Low Voltage PORT0–PORT7	V_{OL}	I_{SINK} < 20mA			0.6	V
Input Capacitance PORT0–PORT7				20		pF
10mA Port Sinking Current PORT0–PORT7		V_{CC} = +1.62V to +3.6V, T_A = +25°C	8.55		11.52	mA
		V_{CC} = +3.3V, V_{OL} = +1V	8.67	9.76	10.51	
20mA Port Sinking Current PORT0–PORT7		V_{CC} = +1.62V to +3.6V, T_A = +25°C	19.40		21.33	mA
		V_{CC} = +3.3V, V_{OL} = +1V	19.55	20	20.69	
Port Sink Current Variation		V_{CC} = +3.3V, V_{OL} = +1V, T_A = +25°C, 20mA output mode		±1.5	±2.4	%
Output Logic-Low Voltage $\overline{INT1}$, $\overline{INTK}$		I_{SINK} = 10mA			0.6	V
PWM Frequency	f_{PWM}	Derived from oscillator clock		500		Hz
SERIAL-INTERFACE SPECIFICATIONS						
Input High Voltage SDA, SCL, AD0	V_{IH}		0.7 x V_{CC}			V
Input Low Voltage SDA, SCL, AD0	V_{IL}				0.3 x V_{CC}	V
Input Leakage Current SDA, SCL, AD0	I_{IN}	$V_{IN} \le V_{CC}$	-0.25		+0.25	µA
		$V_{IN} > V_{CC}$	-0.5		+0.5	
Output Low Voltage SDA	V_{OL}	I_{SINK} = 6mA			0.6	V
Input Capacitance SDA, SCL, AD0	C_{IN}			10		pF
I²C TIMING SPECIFICATIONS						
SCL Serial-Clock Frequency	f_{SCL}	Bus timeout disabled	0		400	kHz
Bus Free Time Between a STOP and START Condition	t_{BUF}		1.3			µs
Hold Time (Repeated) START Condition	$t_{HD, STA}$		0.6			µs
Repeated START Condition Setup Time	$t_{SU, STA}$		0.6			µs
STOP Condition Setup Time	$t_{SU, STO}$		0.6			µs

Electrical Characteristics (continued)

(V_{CC} = +1.62V to +3.6V, T_A = -40°C to +85°C, unless otherwise noted. Typical values are at V_{CC} = +3.3V, T_A = +25°C.) (Notes 2, 3)

PARAMETER	SYMBOL	CONDITIONS	MIN	TYP	MAX	UNITS
Data Hold Time	$t_{HD, DAT}$	(Note 5)			0.9	µs
Data Setup Time	$t_{SU, DAT}$		100			ns
SCL Clock Low Period	t_{LOW}		1.3			µs
SCL Clock High Period	t_{HIGH}		0.7			µs
Rise Time of Both SDA and SCL Signals, Receiving	t_R	(Notes 4, 6)		$20 + 0.1C_b$	300	ns
Fall Time of Both SDA and SCL Signals, Receiving	t_F	(Notes 4, 6)		$20 + 0.1C_b$	300	ns
Fall Time of SDA Signal, Transmitting	$t_{F, TX}$	(Notes 4, 7)		$20 + 0.1C_b$	250	ns
Pulse Width of Spike Suppressed	t_{SP}	(Notes 4, 8)		50		ns
Capacitive Load for Each Bus Line	C_b	(Note 4)			400	pF

Note 2: All parameters are tested at T_A = +25°C. Specifications over temperature are guaranteed by design.
Note 3: All digital inputs at V_{CC} or GND.
Note 4: Guaranteed by design.
Note 5: A master device must provide a hold time of at least 300ns for the SDA signal (referred to V_{IL} of the SCL signal) to bridge the undefined region of SCL's falling edge.
Note 6: C_b = total capacitance of one bus line in pF. t_R and t_F measured between $+0.3V_{CC}$ and $+0.7V_{CC}$.
Note 7: $I_{SINK} \le 6mA$.
Note 8: Input filters on the SDA, SCL, and AD0 inputs suppress noise spikes less than 50ns.

Typical Operating Characteristics

(V_{CC} = +2.5V, T_A = +25°C, unless otherwise noted.)

GPO OUTPUT LOW VOLTAGE vs. SINK CURRENT (COL2–COL7)

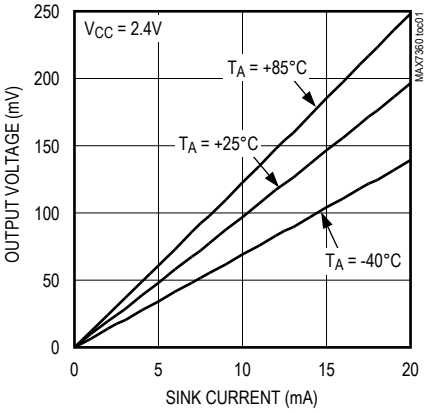

GPO OUTPUT LOW VOLTAGE vs. SINK CURRENT (COL2–COL7)

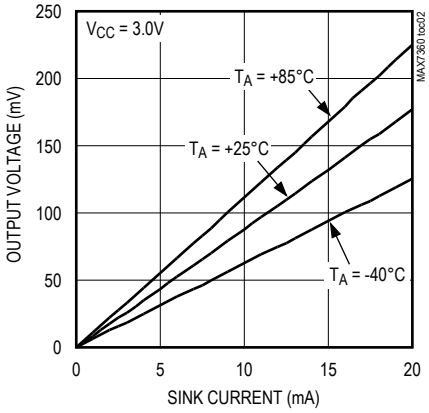

GPO OUTPUT LOW VOLTAGE vs. SINK CURRENT (COL2–COL7)

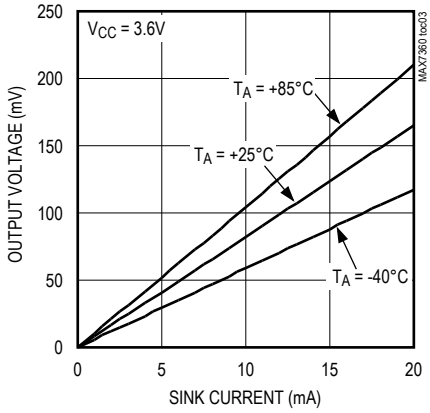

SUPPLY CURRENT vs. SUPPLY VOLTAGE

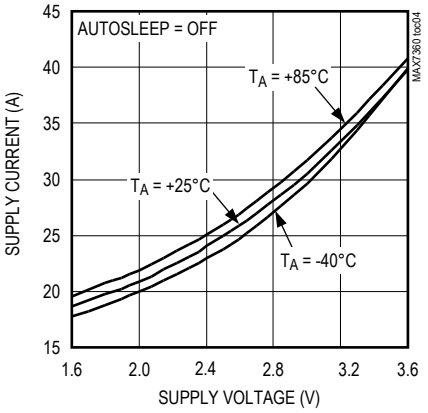

KEY-SWITCH SOURCE CURRENT vs. SUPPLY VOLTAGE

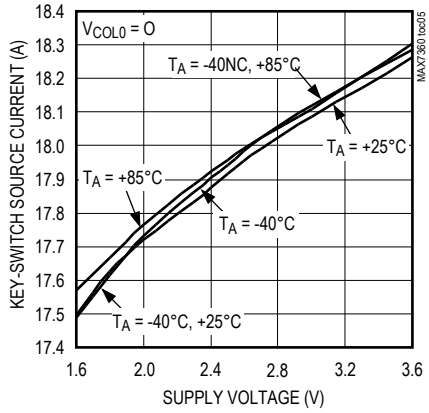

SHUTDOWN SUPPLY CURRENT vs. SUPPLY VOLTAGE

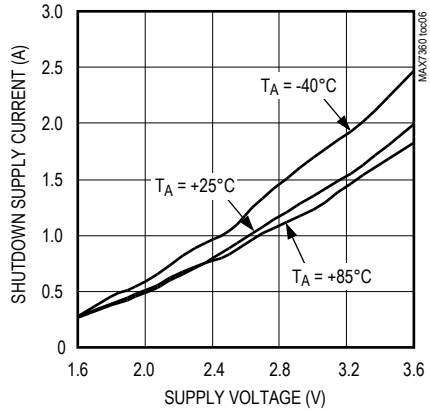

CONSTANT-CURRENT GPIO OUTPUT SINK CURRENT vs. OUTPUT VOLTAGE

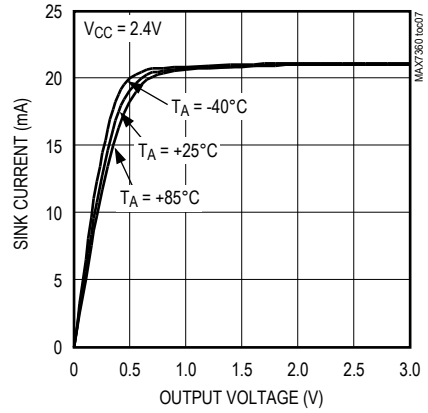

CONSTANT-CURRENT GPIO OUTPUT SINK CURRENT vs. OUTPUT VOLTAGE

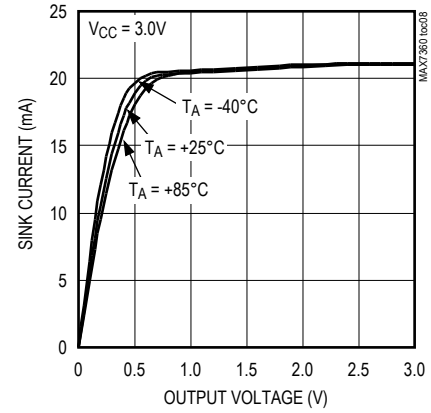

CONSTANT-CURRENT GPIO OUTPUT SINK CURRENT vs. OUTPUT VOLTAGE

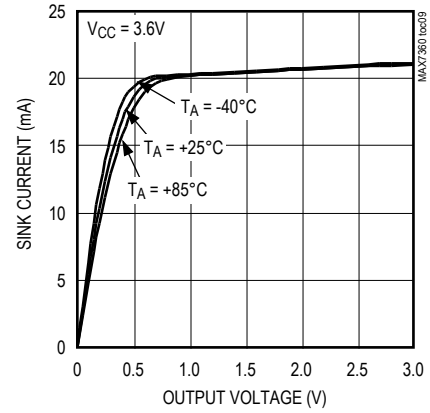

Pin Configurations

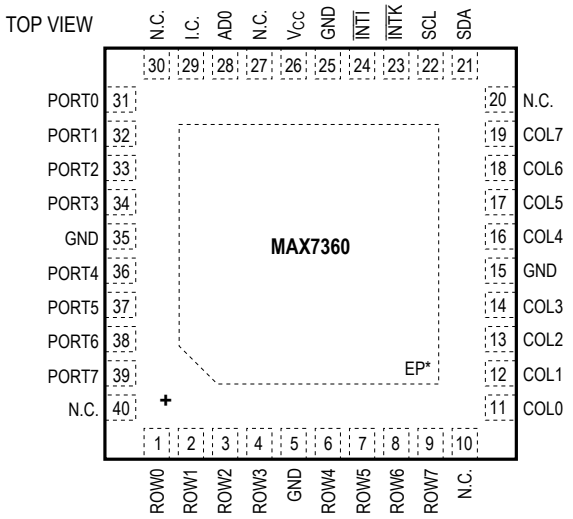

TQFN

*EP = EXPOSED PAD, CONNECT EP TO GROUND.

TOP VIEW
BUMP IN BOTTOM

MAX7360

ROW0 A1	PORT6 A2	PORT4 A3	PORT3 A4	PORT1 A5	PORT0 A6
ROW1 B1	PORT7 B2	PORT5 B3	GND B4	PORT2 B5	AD0 B6
ROW3 C1	GND C2	ROW2 C3	I.C. C4	N.C. C5	V_{CC} C6
ROW4 D1	ROW5 D2	COL2 D3	$\overline{INTK}$ D4	GND D5	$\overline{INTI}$ D6
ROW6 E1	COL0 E2	GND E3	COL5 E4	COL7 E5	SCL E6
ROW7 F1	COL1 F2	COL3 F3	COL4 F4	COL6 F5	SDA F6

WLP
(2.6mm x 2.6mm)

Pin Description

PIN		NAME	FUNCTION
TQFN	WLP		
1	A6	ROW0	Row Input from Key Matrix. Leave ROW0 unconnected or connect to GND if unused.
2	B6	ROW1	Row Input from Key Matrix. Leave ROW1 unconnected or connect to GND if unused.
3	C4	ROW2	Row Input from Key Matrix. Leave ROW2 unconnected or connect to GND if unused.
4	C6	ROW3	Row Input from Key Matrix. Leave ROW3 unconnected or connect to GND if unused.
5, 15, 25, 35	B4, C5, D2, E4	GND	Ground
6	D6	ROW4	Row Input from Key Matrix. Leave ROW4 unconnected or connect to GND if unused.
7	D5	ROW5	Row Input from Key Matrix. Leave ROW5 unconnected or connect to GND if unused.
8	E6	ROW6	Row Input from Key Matrix. Leave ROW6 unconnected or connect to GND if unused.
9	D4	ROW7	Row Input from Key Matrix. Leave ROW7 unconnected or connect to GND if unused.
10, 20, 27, 30, 40	C2	N.C.	No Connection. Not internally connected. Leave unconnected.
11	F6	COL0	Column Output to Key Matrix. Leave COL0 unconnected if unused.
12	E5	COL1	Column Output to Key Matrix. Leave COL1 unconnected if unused.
13	F5	COL2	Column Output to Key Matrix. Leave COL2 unconnected if unused. COL2 can be configured as a GPO (see Table 9 in the *Register Tables* section).
14	F4	COL3	Column Output to Key Matrix. Leave COL3 unconnected if unused. COL3 can be configured as a GPO (see Table 9 in the *Register Tables* section).
16	F3	COL4	Column Output to Key Matrix. Leave COL4 unconnected if unused. COL4 can be configured as a GPO (see Table 9 in the *Register Tables* section).
17	E3	COL5	Column Output to Key Matrix. Leave COL5 unconnected if unused. COL5 can be configured as a GPO (see Table 9 in the *Register Tables* section).
18	F2	COL6	Column Output to Key Matrix. Leave COL6 unconnected if unused. COL6 can be configured as a GPO (see Table 9 in the *Register Tables* section).
19	F1	COL7	Column Output to Key Matrix. Leave COL7 unconnected if unused. COL7 can be configured as a GPO (see Table 9 in the *Register Tables* section).
21	E2	SDA	I²C-Compatible, Serial-Data I/O
22	E1	SCL	I²C-Compatible, Serial-Clock Input
23	D3	$\overline{INTK}$	Active-Low Key-Switch Interrupt Output. $\overline{INTK}$ is open drain and requires a pullup resistor.
24	D1	$\overline{INTI}$	Active-Low GPI Interrupt Output. $\overline{INTI}$ is open drain and requires a pullup resistor.
26	C1	V_{CC}	Positive Supply Voltage. Bypass V_{CC} to GND with a 0.1µF or higher ceramic capacitor.
28	B1	AD0	Address Input. AD0 selects up to four device slave addresses (Table 3).
29	A1	I.C.	Internally Connected. Connect to GND for normal operation.
31	B2	PORT0	GPIO Port. Open-drain I/O rated at +14V. PORT0 can be configured as a constant-current output.
32	A2	PORT1	GPIO Port. Open-drain I/O rated at +14V. PORT1 can be configured as a constant-current output.
33	B3	PORT2	GPIO Port. Open-drain I/O rated at +14V. PORT2 can be configured as a constant-current output.
34	A3	PORT3	GPIO Port. Open-drain I/O rated at +14V. PORT3 can be configured as a constant-current output.

Pin Description (continued)

PIN		NAME	FUNCTION
TQFN	WLP		
36	A4	PORT4	GPIO Port. Open-drain I/O rated at +14V. PORT4 can be configured as a constant-current output.
37	C3	PORT5	GPIO Port. Open-drain I/O rated at +14V. PORT5 can be configured as a constant-current output.
38	A5	PORT6	GPIO Port. Open-drain I/O rated at +14V. PORT6 can be configured as a constant-current output, or a rotary switch input.
39	B5	PORT7	GPIO Port. Open-drain I/O rated at +14V. PORT7 can be configured as a constant-current output, or a rotary switch input.
—	—	EP	Exposed Pad (TQFN only). EP is internally connected to GND. Connect EP to a ground plane to increase thermal performance.

Functional Block Diagram

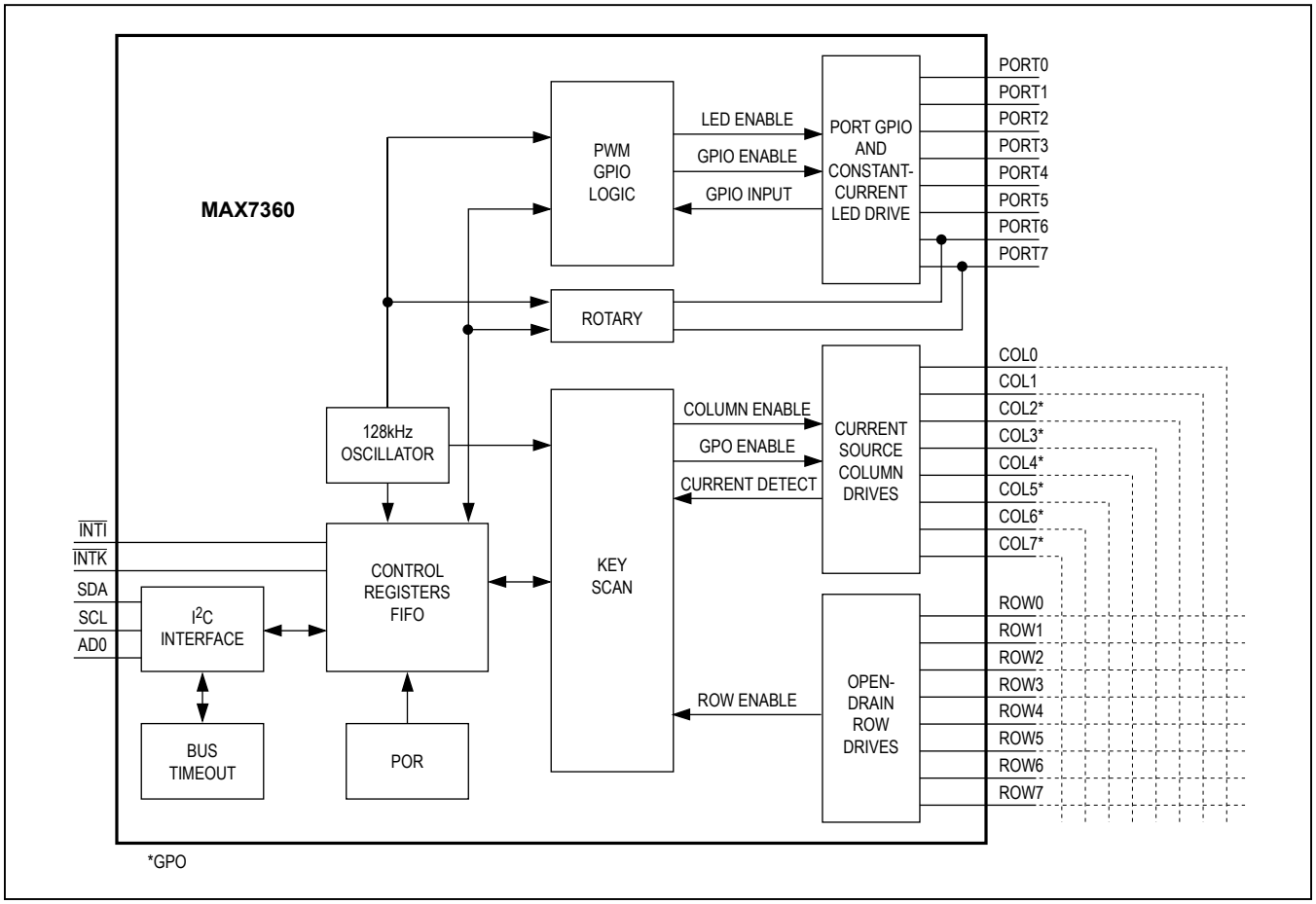

Detailed Description

The MAX7360 is a microprocessor peripheral low-noise key-switch controller that monitors up to 64 key switches with optional autorepeat, and key events that are presented in a 16-byte FIFO. The MAX7360 also features eight open-drain GPIOs configured for digital I/O or constant-current output for LED applications up to +14V.

The MAX7360 features an automatic sleep mode and automatic wakeup that further reduce supply current consumption. The MAX7360 can be configured to enter sleep mode after a programmable time following a key event. The FIFO content is maintained and can be read in sleep mode. The MAX7360 does not enter autosleep when a key is held down. The autowake feature takes the MAX7360 out of sleep mode following a keypress event. Enable/disable autosleep and autowake through the configuration register (Table 8).

To prevent overloading the microprocessor with too many interrupts, interrupt requests are issued on a programmable number of FIFO entries, and/or after a set period of time (Table 10). The key-switch status is checked by reading the key-switch FIFO. A 1-byte read access returns both the next key event in the FIFO (if there is one) and the FIFO status. $\overline{INTK}$ functions as an open-drain general-purpose output (GPO) capable of driving an LED if key-switch interrupts are not required.

Up to six of the key-switch outputs function as open-drain GPOs capable of driving additional LEDs when the application requires fewer keys to be scanned. For each key-switch output used as a GPO, the number of monitored key switches reduces by eight.

Initial Power-Up

On power-up, all control registers are set to power-up values and the MAX7360 is in sleep mode (Table 1).

Table 1. Register Address Map and Power-Up Condition

ADDRESS CODE (hex)	READ/ WRITE	POWER-UP VALUE (hex)	REGISTER FUNCTION	DESCRIPTION
0x00	Read only	0x3F	Keys FIFO	Read FIFO key-scan data out
0x01	R/$\overline{W}$	0x0A	Configuration	Power-down, key-release enable, autowakeup, and I²C timeout enable
0x02	R/$\overline{W}$	0xFF	Debounce	Key debounce time settling and GPO enable
0x03	R/$\overline{W}$	0x00	Interrupt	Key-switch interrupt $\overline{INTK}$ frequency setting
0x04	R/$\overline{W}$	0xFE	GPO	COL2–COL7 and $\overline{INTK}$ GPO control
0x05	R/$\overline{W}$	0x00	Key repeat	Delay and frequency for key repeat
0x06	R/$\overline{W}$	0x07	Sleep	Idle time to autosleep
0x40	R/$\overline{W}$	0x00	GPIO global configuration	Rotary switch, GPIO standby, GPIO reset, fade
0x41	R/$\overline{W}$	0x00	GPIO control	PORT0–PORT7 input/output control
0x42	R/$\overline{W}$	0x00	GPIO debounce	PORT0–PORT7 debounce time setting
0x43	R/$\overline{W}$	0xC0	GPIO constant-current setting	PORT0–PORT7 constant-current output setting
0x44	R/$\overline{W}$	0x00	GPIO output mode	PORT0–PORT7 output mode control
0x45	R/$\overline{W}$	0x00	Common PWM	Common PWM duty-cycle setting
0x46	R/$\overline{W}$	0x00	Rotary switch configuration	Rotary switch interrupt frequency and debounce time setting
0x48	Read only	0x00	I²C timeout flag	I²C timeout since last POR
0x49	Read only	0xFF	GPIO input register	PORT0–PORT7 input values
0x4A	Read only	0x00	Rotary switch count	Switch cycles since last read
0x50	R/$\overline{W}$	0x00	PORT0 PWM	PORT0 individual duty-cycle setting
0x51	R/$\overline{W}$	0x00	PORT1 PWM	PORT1 individual duty-cycle setting
0x52	R/$\overline{W}$	0x00	PORT2 PWM	PORT2 individual duty-cycle setting
0x53	R/$\overline{W}$	0x00	PORT3 PWM	PORT3 individual duty-cycle setting
0x54	R/$\overline{W}$	0x00	PORT4 PWM	PORT4 individual duty-cycle setting
0x55	R/$\overline{W}$	0x00	PORT5 PWM	PORT5 individual duty-cycle setting
0x56	R/$\overline{W}$	0x00	PORT6 PWM	PORT6 individual duty-cycle setting
0x57	R/$\overline{W}$	0x00	PORT7 PWM	PORT7 individual duty-cycle setting
0x58	R/$\overline{W}$	0x00	PORT0 configuration	PORT0 interrupt, PWM mode control and blink period setting
0x59	R/$\overline{W}$	0x00	PORT1 configuration	PORT1 interrupt, PWM mode control and blink period setting
0x5A	R/$\overline{W}$	0x00	PORT2 configuration	PORT2 interrupt, PWM mode control and blink period setting
0x5B	R/$\overline{W}$	0x00	PORT3 configuration	PORT3 interrupt, PWM mode control and blink period setting
0x5C	R/$\overline{W}$	0x00	PORT4 configuration	PORT4 interrupt, PWM mode control and blink period setting
0x5D	R/$\overline{W}$	0x00	PORT5 configuration	PORT5 interrupt, PWM mode control and blink period setting
0x5E	R/$\overline{W}$	0x00	PORT6 configuration	PORT6 interrupt, PWM mode control and blink period setting
0x5F	R/$\overline{W}$	0x00	PORT7 configuration	PORT7 interrupt, PWM mode control and blink period setting

Table 2. Key-Switch Mapping

PIN	COL0	COL1	COL2*	COL3*	COL4*	COL5*	COL6*	COL7*
ROW0	KEY 0	KEY 8	KEY 16	KEY 24	KEY 32	KEY 40	KEY 48	KEY 56
ROW1	KEY 1	KEY 9	KEY 17	KEY 25	KEY 33	KEY 41	KEY 49	KEY 57
ROW2	KEY 2	KEY 10	KEY 18	KEY 26	KEY 34	KEY 42	KEY 50	KEY 58
ROW3	KEY 3	KEY 11	KEY 19	KEY 27	KEY 35	KEY 43	KEY 51	KEY 59
ROW4	KEY 4	KEY 12	KEY 20	KEY 28	KEY 36	KEY 44	KEY 52	KEY 60
ROW5	KEY 5	KEY 13	KEY 21	KEY 29	KEY 37	KEY 45	KEY 53	KEY 61
ROW6	KEY 6	KEY 14	KEY 22	KEY 30	KEY 38	KEY 46	KEY 54	KEY 62
ROW7	KEY 7	KEY 15	KEY 23	KEY 31	KEY 39	KEY 47	KEY 55	KEY 63

**These columns can be configured as GPOs.*

Key-Scan Controller

Key inputs are scanned statically, not dynamically, to ensure low-EMI operation. As inputs only toggle in response to switch changes, the key matrix can be routed closer to sensitive circuit nodes.

The key-scan controller debounces and maintains a FIFO of keypress and release events (including autorepeated keypresses, if autorepeat is enabled). Table 2 shows the key-switch order. The user-programmable key-switch debounce time, and autosleep timer, is derived from the 64kHz clock, which in turn is derived from the 128kHz oscillator. Time delay for autorepeat and key-switch interrupt is based on the key-switch debounce time.

Keys FIFO Register (0x00)

The keys FIFO register contains the information pertaining to the status of the keys FIFO, as well as the key events that have been debounced (see Table 7 in the *Register Tables* section). Bits D0–D5 denote which of the 64 keys have been debounced and the keys are numbered as in Table 2.

D7 indicates if there is more data in the FIFO, except when D5:D0 indicate key 63 or key 62. When D5:D0 indicate key 63 or key 62, the host should read one more time to determine whether there is more data in the FIFO. Use key 62 and key 63 for rarely used keys. D6 indicates if it is a keypress or release event, except when D5:D0 indicate key 63 or key 62.

Reading the key-scan FIFO clears the interrupt $\overline{INTK}$ depending on the setting of bit D5 in the configuration register (0x01).

Configuration Register (0x01)

The configuration register controls the I²C bus timeout feature, enables key-release detection, enables autowake, and determines how $\overline{INTK}$ is deasserted. Write to bit D7 to put the MAX7360 into sleep mode or operating mode. Autosleep and autowake, when enabled, also change the status of D7 (see Table 8 in the *Register Tables* section).

Debounce Register (0x02)

The debounce register sets the time for each debounce cycle, as well as setting whether the GPO ports are enabled or disabled. Bits D0–D4 set the debounce time in increments of 1ms starting at 9ms and ending at 40ms (see Table 9 in the *Register Tables* section). Bits D5, D6, and D7 set which of the GPO ports is enabled. Note the GPO ports are enabled only in the combinations shown in Table 9, from all disabled to all enabled.

Key-Switch Interrupt Register (0x03)

The interrupt register contains information related to the settings of the interrupt request function, as well as the status of the $\overline{INTK}$ output, which can also be configured as a GPO. If bits D0–D7 are set to 0x00, the $\overline{INTK}$ output is configured as a GPO that is controlled by bit D1 in the port register. There are two types of interrupts, the FIFO-based interrupt and time-based interrupt. Set bits D0–D4 to assert interrupts at the end of the selected number of debounce cycles following a key event (see Table 10 in the *Register Tables* section). This number ranges from 1–31 debounce cycles. Setting bits D7, D6, and D5 set the FIFO-based interrupt when there are 2–14 key events stored in the FIFO. Both interrupts can be configured simultaneously and $\overline{INTK}$ asserts depending on which condition is met first. $\overline{INTK}$ deasserts depending on the status of bit D5 in the configuration register.

Ports Register (0x04)

The ports register sets the values of PORT2–PORT7 and the $\overline{INTK}$ port, when configured, as open-drain GPOs.

The settings in this register are ignored for ports not configured as GPOs, and a read from this register returns the values stored in the register (see Table 11 in the *Register Tables* section).

Autorepeat Register (0x05)

The MAX7360 autorepeat feature notifies the host that at least one key has been pressed for a continuous period. The autorepeat register enables or disables this feature, sets the time delay after the last key event before the key repeat code (0x7E) is entered into the FIFO, and sets the frequency at which the key-repeat code is entered into the FIFO thereafter. Bit D7 specifies whether the autorepeat function is enabled with 0 denoting autorepeat disabled, and 1 denoting autorepeat enabled. Bits D0–D3 specify the autorepeat delay in terms of debounce cycles ranging from 8–128 debounce cycles (see *Table 12* in the *Register Tables* section). Bits D4, D5, and D6 specify the autorepeat rate or frequency ranging from 4–32 debounce cycles.

When autorepeat is enabled, holding the key pressed results in a key-repeat event that is denoted by 0x7E. The key being pressed does not show up again in the FIFO.

Only one autorepeat code is entered into the FIFO, regardless of the number of keys pressed. The autorepeat code continues to be entered in the FIFO at the frequency set by bits D[4:6] until another key event is recorded. Following the key-release event, if any keys are still pressed, the MAX7360 restarts the autorepeat sequence.

Autosleep Register (0x06)

Autosleep puts the MAX7360 in sleep mode to draw minimal current. When enabled, the MAX7360 enters sleep mode if no keys are pressed for the autosleep time (see *Table 13* in the *Register Tables* section).

Key-Switch Sleep Mode

In sleep mode, the MAX7360 draws minimal current. Switch-matrix current sources are turned off and pulled up to V_{CC}. When autosleep is enabled, key-switch inactivity for a period longer than the autosleep time puts the part into sleep mode (FIFO data is maintained). Writing a 1 to D7 in the configuration register, or a keypress, can take the MAX7360 out of sleep mode. Bit D7 in the configuration register gives the sleep-mode status and can be read any time. The FIFO data is maintained while in sleep mode.

Autowake

Keypresses initiate autowake and the MAX7360 goes into operating mode. Keypresses that autowake the MAX7360 are not lost. When a key is pressed while the MAX7360 is in sleep mode, all analog circuitry, including switch-matrix current sources, turn on in 2ms. The initial key needs to be pressed for 2ms plus the debounce time to be stored in the FIFO. Write a 0 to D1 in the configuration register (0x01) to disable autowakeup.

GPIOs

The MAX7360 has eight GPIO ports with LED control functions. The ports can be used as logic inputs, logic outputs, or constant-current PWM LED drivers. In addition, PORT7 and PORT6 can function as a rotary switch input pair. When in PWM mode, the ports are set up to start their PWM cycle in 45N phase increments. This prevents large current spikes on the LED supply voltage when driving multiple LEDs.

GPIO Global Configuration Register (0x40)

The GPIO global configuration register controls the main settings for the eight GPIOs (see Table 14 in the *Register Tables* section).

Bit D7 enables PORT[7:6] as inputs for a rotary switch. Bit D5 enables interrupt generation for I²C timeouts. D4 is the main enable/shutdown bit for the GPIOs. D3 functions as a software reset for the GPIO registers (0x40 to 0x5F). Bits D[2:0] set the fade in/out time for the GPIOs configured as constant-current sinks.

GPIO Control Register (0x41)

The GPIO control register configures each port as either an input or an output (see Table 15 in the *Register Tables* section). All GPIOs allow individual configurations, and power up as inputs. Enabling rotary switch mode automatically sets D7 and D6 as inputs. The ports consume additional current if their inputs are left undriven.

GPIO Debounce Configuration Register (0x42)

The GPIO debounce configuration register sets the amount of time a GPIO must be held for the MAX7360 to register a logic transition (see Table 16 in the *Register Tables* section). The GPIO debounce setting is independent of the key-switch debounce setting. Five bits (D[4:0]) set 32 possible debounce times from 9ms up to 40ms.

GPIO Constant-Current Setting Register (0x43)

The GPIO constant-current setting register sets the global constant-current amount (see Table 17 in the *Register Tables* section). Bits D1 and D0 set the global current values from 5mA up to 20mA.

GPIO Output Mode Register (0x44)

The GPIO output mode register sets an output as either a constant-current or non-constant-current output for PORT[7:0] (see Table 18 in the *Register Tables* section). Outputs are configured as constant-current outputs by default to prevent accidental loading of an LED across an unregulated output. The constant-current circuits automatically turn off when not in use to reduce current consumption.

Common PWM Register (0x45)

The common PWM register stores the common constant-current output PWM duty cycle (see Table 19 in the *Register Tables* section). The values stored in this register translate over to a PWM duty cycle in the same manner as the individual PWM registers (0x50 to 0x57). Ports can use their own individual PWM value, or the common PWM value. Write to this register to change the duty cycle of several ports at once.

Rotary Switch Configuration Register (0x46)

The rotary switch configuration register stores rotary switch settings for PORT7 and PORT6 (see Table 20 in the *Register Tables* section). D7 determines whether switch counts or a time delay will trigger an interrupt if enabled. D[6:4] set the count or time amount to wait before sending an interrupt. Bits D[3:0] set the debounce cycle time for the rotary switch inputs. Debounce time ranges from 0 to 15ms.

I²C Timeout Flag Register (0x48) (Read Only)

The I²C timeout flag register contains a single bit (D0), which indicates if an I²C timeout has occurred (see Table 21 in the *Register Tables* section). Read this register to clear an I²C timeout initiated interrupt.

GPIO Input Register (0x49) (Read Only)

The GPIO input register contains the input data for all of the GPIOs (see Table 22 in the *Register Tables* section). Ports configured as outputs are read as high. There is one debounce period delay prior to detecting a transition on the input port. This prevents a false interrupt from occurring when changing a port from an output to an input. The GPIO input register reports the state of all input ports regardless of any interrupt mask settings. Ports configured as an input have a 2µA internal pullup to V_{CC} for PORT[5:0] and a 10µA internal pullup to V_{CC} for PORT[7:6].

Rotary Switch Count Register (0x4A) (Read Only)

The MAX7360 keeps a count of the rotary switch rotations in two's compliment format (see Table 23 in the *Register Tables* section). The register values wrap around as the count value switches from a positive to a negative value and back again. The count resets to zero after an I²C read to this register.

PORT0–PORT7 Individual PWM Ratio Registers (0x50 to 0x57)

Each port has an individual PWM ratio register (0x50 to 0x57, see Table 24 in the *Register Tables* section). Use values 0x00 to 0xFE in these registers to configure the number of cycles out of 256 the output sinks current (LED is on), from 0 cycles to 254 cycles. Use 0xFF to have an output continuously sink current (always on). For applications requiring multiple ports to have the same intensity, program a particular port's configuration register (0x58 to 0x5F) to use the common PWM register (0x45). New PWM settings take place at the beginning of a PWM cycle, to allow changes from common intensity to individual intensity with no interruption in the PWM cycle.

PORT0–PORT7 Configuration Registers (0x58 to 0x5F)

Registers 0x58 to 0x5F set individual configurations for each port (see Table 25 in the *Register Tables* section). Bits D7 and D6 determine the interrupt settings for the inputs. Interrupts can assert upon detection of a logic transition, a rising edge, or not at all. D5 sets the port's PWM setting to either the common or individual PWM setting. Bits D[4:2] enable and set the ports' individual blink period from 0 to 4096ms. Bits D1 and D0 set a port's blink duty cycle.

Fading

Set the fade cycle time in the GPIO global configuration register (0x40) to a non-zero value to enable fade in/out (see Table 14 in the *Register Tables* section). Fade in increases an LED's PWM intensity in 16 even steps from zero to its stored value. Fade out decreases an LED's PWM intensity in 16 even steps from its current value to zero. Fading occurs automatically in any of the following scenarios:

1) Change the common PWM register value from any value to zero to cause all ports using the common PWM register settings to fade out. No ports using individual PWM settings are affected.
2) Change the common PWM register value to any value from zero to cause all ports using the common PWM register settings to fade in. No ports using individual PWM settings are affected.

3) Put the part out of shutdown to cause all ports to fade in. Changing an individual PWM intensity during fade in automatically cancels that port's fade and immediately output at its newly programmed intensity.
4) Put the part into shutdown to cause all ports to fade out. Changing an individual PWM intensity during fade out automatically cancels that port's fade and immediately turns off.

Blink

Each port has its own blink control settings through registers 0x58 to 0x5F (see Table 25 in the *Register Tables* section). The blink period ranges from 0 (blink disabled) to 4.096s. Settable blink duty cycles range from 6.25% to 50%. All blink periods start at the same PWM cycle for synchronized blinking between multiple ports.

When the blink setting is changed, the internal controller waits until the current blink period finishes before applying the change. As a result, the change in blink period may not always be instantaneous.

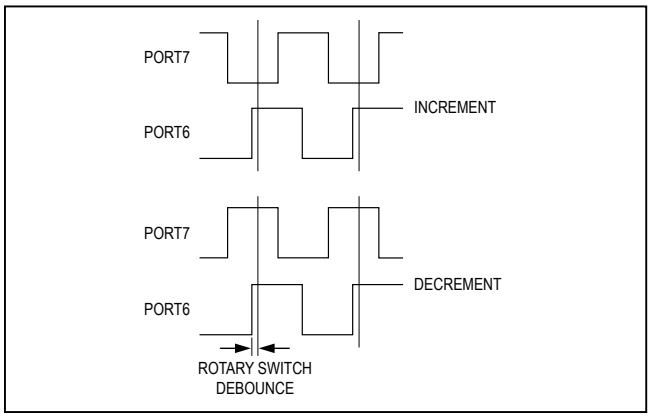

Figure 1. Rotary Switch Input Signal Timing

GPIO Port Interrupts ($\overline{INTI}$)

Three possible sources generate $\overline{INTI}$: I²C timeout, GPIOs configured as inputs, and the rotary switch (registers 0x48, 0x49, and 0x4A). Read the respective data/status registers for each type of interrupt to clear $\overline{INTI}$.

Set register 0x46 for rotary switch-based interrupts. Set registers 0x58 to 0x5F for individual GPI-based interrupts. If multiple sources generate the interrupt, all the related status registers must be read to clear $\overline{INTI}$.

Rotary Switch

The MAX7360 can accept a 2-bit rotary switch inputs on PORT6 and PORT7. Rotation of the switch in a clockwise direction increments the count. Enable rotary switch mode from the GPIO global configuration register (0x40). Several settings for PORT6 and PORT7 occur during rotary switch mode:

1) Each port has a 10µA pullup to V_{CC}.
2) Register 0x46 sets the debounce time.
3) A debounced rising edge on PORT6 while PORT7 is high decreases the count.
4) A debounced rising edge on PORT6 while PORT7 is low increases the count.

For more details, see Figure 1.

Serial Interface

Figure 2 shows the 2-wire serial interface timing details.

Serial Addressing

The MAX7360 operates as a slave that sends and receives data through an I²C-compatible 2-wire interface. The interface uses a serial-data line (SDA) and a serial-clock line (SCL) to achieve bidirectional communication

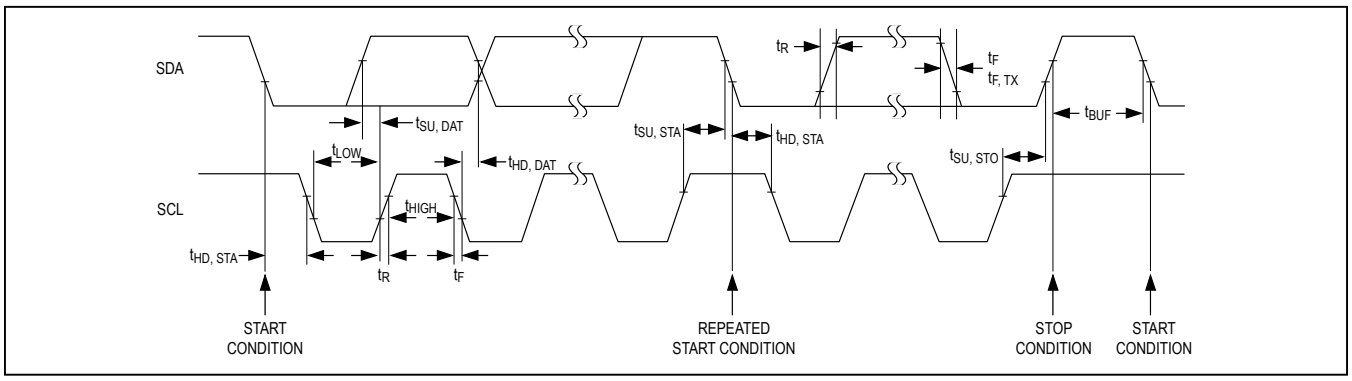

Figure 2. 2-Wire Serial Interface Timing Details

between master(s) and slave(s). A master (typically a microcontroller) initiates all data transfers to and from the MAX7360 and generates the SCL clock that synchronizes the data transfer.

The MAX7360's SDA line operates as both an input and an open-drain output. A pullup resistor, typically 4.7kΩ, is required on SDA. The MAX7360's SCL line operates only as an input. A pullup resistor is required on SCL if there are multiple masters on the 2-wire interface, or if the master in a single-master system has an open-drain SCL output.

Each transmission consists of a START (S) condition (Figure 3) sent by a master, followed by the MAX7360 7-bit slave address plus R/$\overline{W}$ bit, a register address byte, one or more data bytes, and finally, a STOP (P) condition.

START and STOP Conditions

Both SCL and SDA remain high when the interface is not busy. A master signals the beginning of a transmission with a START condition by transitioning SDA from high to low while SCL is high. When the master has finished communicating with the slave, it issues a STOP condition by transitioning SDA from low to high while SCL is high. The bus is then free for another transmission.

Bit Transfer

One data bit is transferred during each clock pulse (Figure 4). The data on SDA must remain stable while SCL is high.

Acknowledge

The acknowledge bit is a clocked 9th bit (Figure 5), which the recipient uses to handshake receipt of each byte of data. Thus, each byte transferred effectively requires 9 bits. The master generates the 9th clock pulse, and the recipient pulls down SDA during the acknowledge clock pulse; therefore, the SDA line is stable low during the high period of the clock pulse. When the master is transmitting to the MAX7360, the MAX7360 generates the acknowledge bit because the MAX7360 is the recipient. When the MAX7360 is transmitting to the master, the master generates the acknowledge bit because the master is the recipient.

Table 3. 2-Wire Interface Address Map

PIN AD0	DEVICE ADDRESS							
	A7	A6	A5	A4	A3	A2	A1	A0
GND	0	1	1	1	0	0	0	R/$\overline{W}$
V_{CC}	0	1	1	1	0	1	0	R/$\overline{W}$
SDA	0	1	1	1	1	0	0	R/$\overline{W}$
SCL	0	1	1	1	1	1	0	R/$\overline{W}$

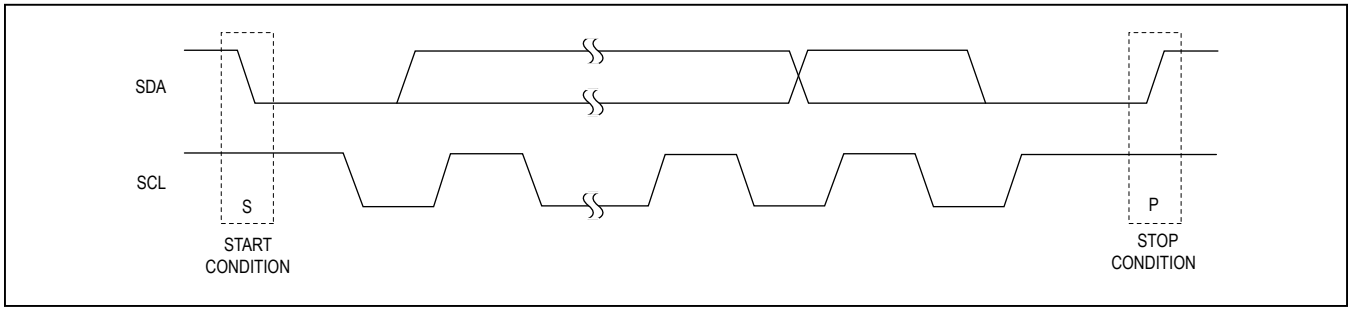

Figure 3. START and STOP Conditions

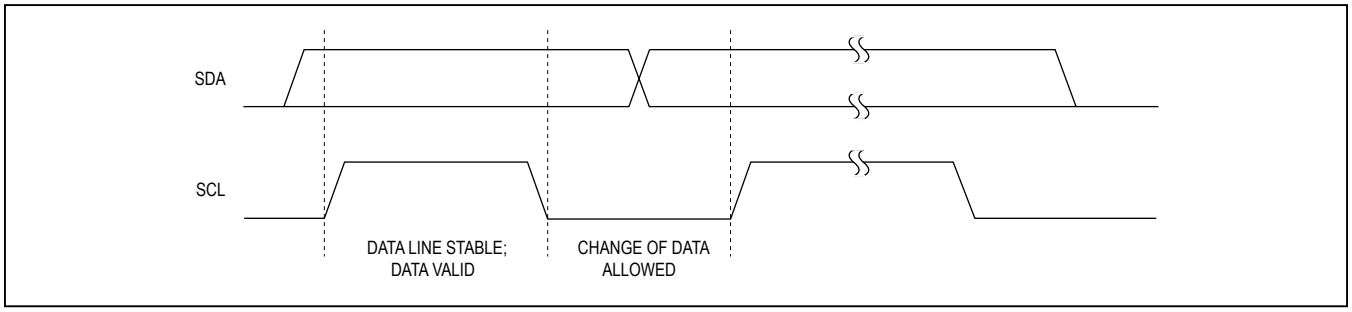

Figure 4. Bit Transfer

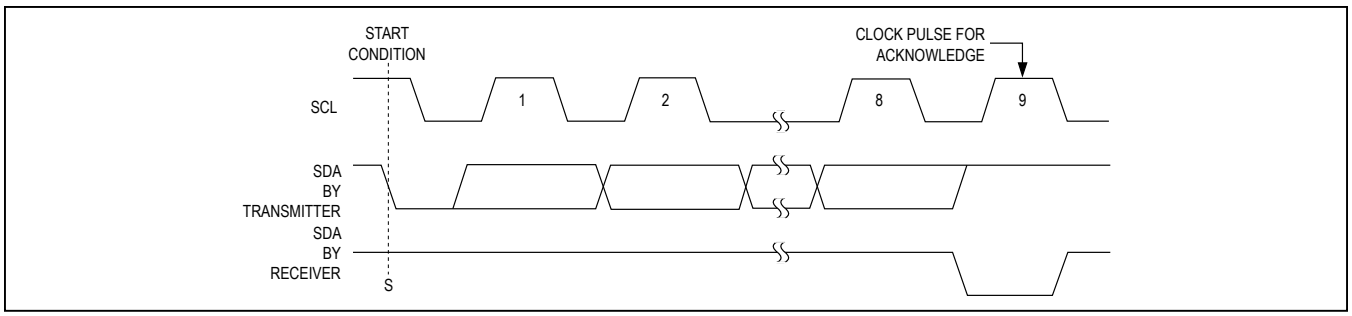

Figure 5. Acknowledge

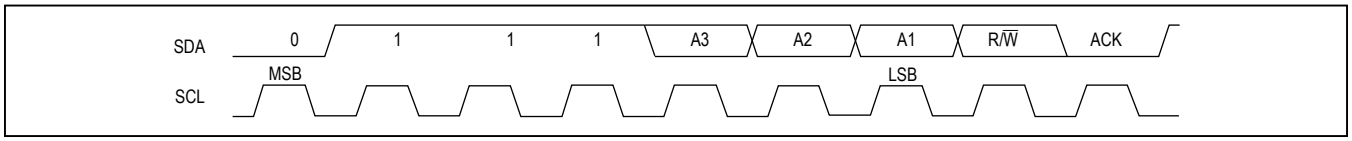

Figure 6. Slave Address

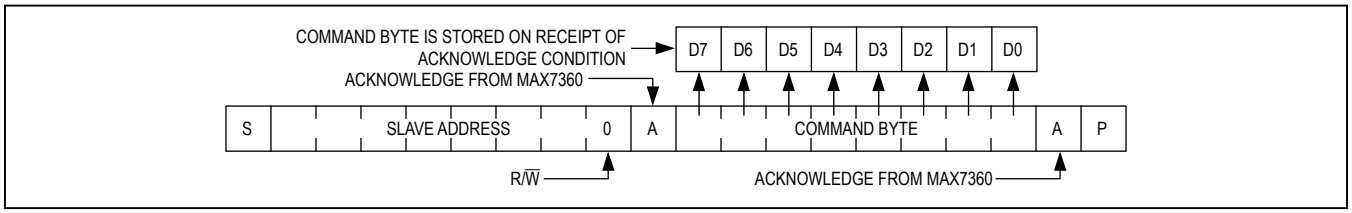

Figure 7. Command Byte Received

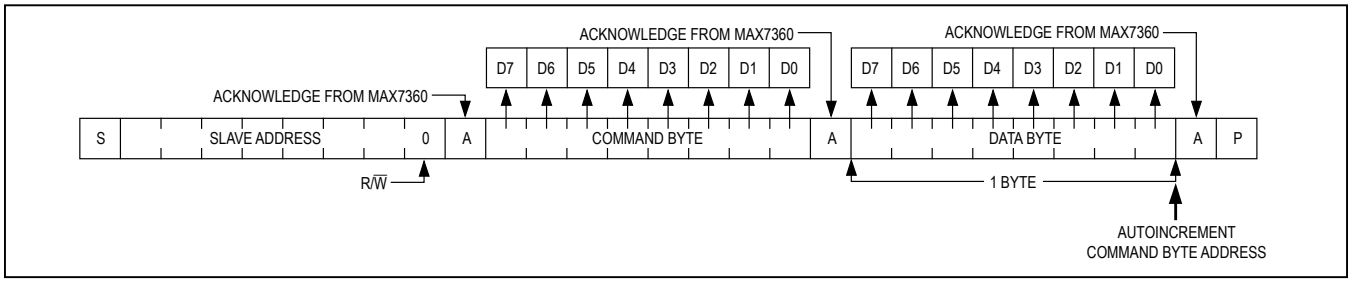

Figure 8. Command and Single Data Byte Received

Slave Addresses

The MAX7360 has a 7-bit long slave address (Figure 6). The bit following a 7-bit slave address is the R/$\overline{W}$ bit, which is low for a write command and high for a read command.

The first 4 bits (MSBs) of the MAX7360 slave address are always 0111. Slave address bits A3, A2, and A1 correspond, by the matrix in Table 3, to the states of the device address input AD0, and A0 corresponds to the R/$\overline{W}$ bit. The AD0 input can be connected to any of four signals (GND, V_{CC}, SDA, or SCL), giving four possible slave address pairs and allowing up to four MAX7360 devices to share the bus. Because SDA and SCL are dynamic signals, care must be taken to ensure that AD0 transitions no sooner than the signals on SDA and SCL.

The MAX7360 monitors the bus continuously, waiting for a START condition, followed by its slave address. When the MAX7360 recognizes its slave address, it acknowledges and is then ready for continued communication.

Bus Timeout

The MAX7360 features a 20ms minimum bus timeout on the 2-wire serial interface, largely to prevent the MAX7360 from holding the SDA I/O low during a read transaction should the SCL lock up for any reason before a serial transaction is completed. Bus timeout operates by causing the MAX7360 to internally terminate a serial

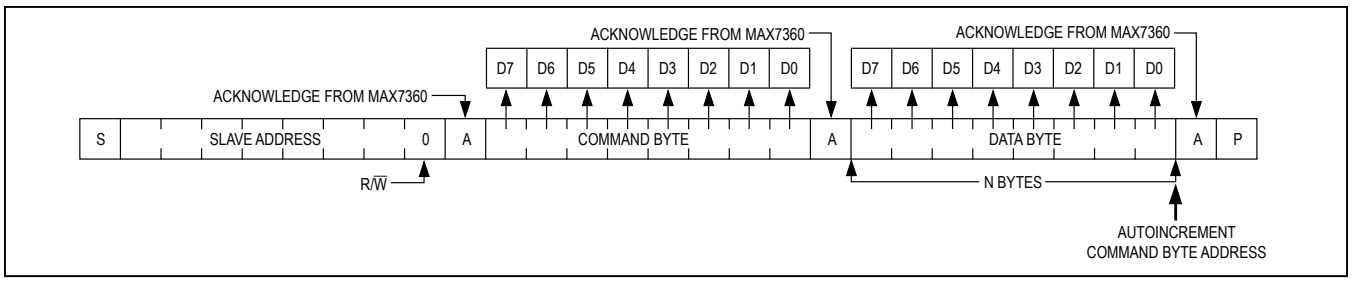

Figure 9. N Data Bytes Received

Table 4. Autoincrement Rules

REGISTER FUNCTION	ADDRESS CODE (hex)	AUTOINCREMENT ADDRESS (hex)
Keys FIFO	0x00	0x00
Autoshutdown	0x06	0x00
All other key switch	0x01 to 0x05	Addr + 0x01
All other GPIO	0x40 to 0x5F	Addr + 0x01

transaction, either read or write, if SCL low exceeds 20ms. After a bus timeout, the MAX7360 waits for a valid START condition before responding to a consecutive transmission. This feature can be enabled or disabled under user control by writing to the configuration register (Table 8 in the *Register Tables* section).

Message Format for Writing the Key-Scan Controller

A write to the MAX7360 comprises the transmission of the slave address with the R/W bit set to zero, followed by at least 1 byte of information. The first byte of information is the command byte. The command byte determines which register of the MAX7360 is to be written by the next byte, if received. If a STOP condition is detected after the command byte is received, the MAX7360 takes no further action (*Figure 7*) beyond storing the command byte.

Any bytes received after the command byte are data bytes. The first data byte goes into the internal register of the MAX7360 selected by the command byte (*Figure 8*).

If multiple data bytes are transmitted before a STOP condition is detected, these bytes are generally stored in subsequent MAX7360 internal registers, because the command byte address generally autoincrements (Table 4).

Message Format for Reading the Key-Scan Controller

The MAX7360 is read using the internally stored command byte as an address pointer, the same way the stored command byte is used as an address pointer for a write. The pointer generally autoincrements after each data byte is read using the same rules as for a write (Table 4). Thus, a read is initiated by first configuring the MAX7360's command byte by performing a write (*Figure 7*). The master can now read n consecutive bytes from the MAX7360, with the first data byte being read from the register addressed by the initialized command byte. When performing read-after-write verification, remember to reset the command byte's address, because the stored command byte address is generally autoincremented after the write (Figure 9, Table 4).

Operation with Multiple Masters

When the MAX7360 is operated on a 2-wire interface with multiple masters, a master reading the MAX7360 uses a repeated start between the write that sets the MAX7360's address pointer, and the read(s) that takes the data from the location(s). This is because it is possible for master 2 to take over the bus after master 1 has set up the MAX7360's address pointer, but before master 1 has read the data. If master 2 subsequently resets the MAX7360's address pointer, master 1's read can be from an unexpected location.

Command Address Autoincrementing

Address autoincrementing allows the MAX7360 to be configured with fewer transmissions by minimizing the number of times the command address needs to be sent. The command address stored in the MAX7360 generally increments after each data byte is written or read (Table 4). Autoincrement only works when doing a multiburst read or write.

Applications Information

Reset from I²C

After a catastrophic event such as ESD discharge or microcontroller reset, use bit D7 of the configuration register (0x01) as a software reset for the key-switch state (the key-switch register values and FIFO remain unaffected). Use bit D4 of the GPIO global configuration register (0x40) as a software reset for the GPIOs.

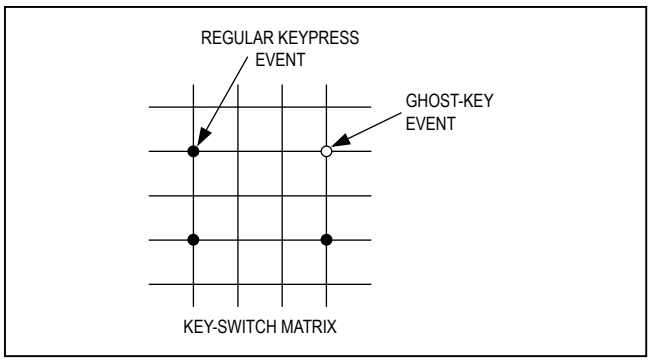

Figure 10. Ghost-Key Phenomenon

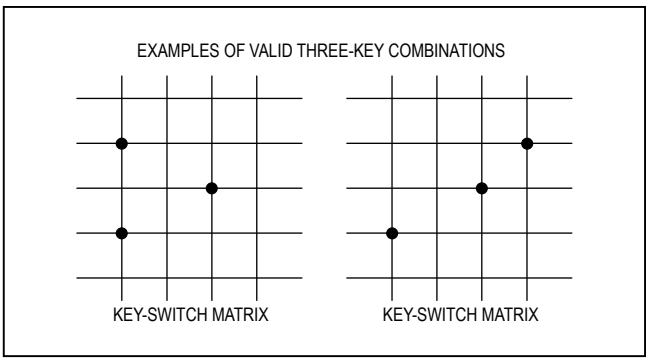

Figure 11. Valid Three-Key Combinations

Ghost-Key Elimination

Ghost keys are a phenomenon inherent with key-switch matrices. When three switches located at the corners of a matrix rectangle are pressed simultaneously, the switch that is located at the last corner of the rectangle (the ghost key) also appears to be pressed. This occurs because the potentials at the two sides of the ghost-key switch are identical due to the other three connections—the switch is electrically shorted by the combination of the other three switches (Figure 10). Because the key appears to be pressed electrically, it is impossible to detect which of the four keys is the ghost key.

The MAX7360 employs a proprietary scheme that detects any three-key combination that generates a fourth ghost key, and does not report the third key that causes a ghost-key event. This means that although ghost keys are never reported, many combinations of three keys are effectively ignored when pressed at the same time. Applications requiring three-key combinations (such as <Ctrl><Alt><Del>) must ensure that the three keys are not wired in positions that define the vertices of a rectangle (Figure 11). There is no limit on the number of keys that can be pressed simultaneously as long as the keys do not generate ghost-key events and FIFO is not full.

Low-EMI Operation

The MAX7360 uses two techniques to minimize EMI radiating from the key-switch wiring. First, the voltage across the switch matrix never exceeds +0.55V if not in sleep mode, independent of supply voltage V_{CC}. This reduces the voltage swing at any node when a switch is pressed to +0.55V maximum. Second, the keys are not dynamically scanned, which would cause the key-switch wiring to continuously radiate interference. Instead, the keys are monitored for current draw (only occurs when pressed), and debounce circuitry only operates when one or more keys are actually pressed.

Switch On-Resistance

The MAX7360 is designed to be insensitive to resistance, either in the key switches, or the switch routing to and from the appropriate COL_ and ROW_ up to 4kΩ (max). These controllers are therefore compatible with low-cost membrane and conductive carbon switches.

Hot Insertion

The $\overline{INTI}$, $\overline{INTK}$, SCL, and AD0 inputs and SDA remain high impedance with up to +3.6V asserted on them when the MAX7360 powers down (V_{CC} = 0). I/O ports (PORT0–PORT7) remain high impedance with up to +14V asserted on them when not powered. Use the MAX7360 in hot-swap applications.

Staggered PWM

The LED's on-time in each PWM cycle are phase delayed 45N into eight evenly spaced start positions. Optimize phasing when using fewer than eight ports as constant-current outputs by allocating the ports with the most appropriate start positions. For example, if using four constant-current outputs, choose PORT0, PORT2, PORT4, and PORT6 because their PWM start positions are evenly spaced. In general, choose the ports that spread the PWM start positions as evenly as possible. This optimally spreads out the current demand from the ports' load supply.

$\overline{INTK}$/$\overline{INTI}$

There are two interrupt outputs, $\overline{INTK}$ and $\overline{INTI}$. Each interrupt operates independently from the other. See the *Key-Switch Interrupt Register (0x03)* and the *GPIO Port Interrupts ($\overline{INTI}$)* sections for additional information regarding these two interrupts.

Power-Supply Considerations

The MAX7360 operates with a +1.62V to +3.6V power-supply voltage. Bypass the power supply to GND with a 0.1µF or higher ceramic capacitor as close as possible to the device.

ESD Protection

All of the MAX7360 pins meet the 2kV Human Body Model ESD tolerances. Key-switch inputs and GPIOs meet IEC 61000-4-2 ESD protection. The IEC test stresses consist of 10 consecutive ESD discharges per polarity, at the maximum specified level and below (per IEC 61000-4-2). Test criteria include:

1) The powered device does not latch up during the ESD discharge event.
2) The device subsequently passes the final test used for prescreening.

Table 5 and Table 6 are from the IEC 61000-4-2: Edition 1.1 1999-05: *Electromagnetic compatibility (EMC) Testing and measurement techniques—Electrostatic discharge immunity test*.

Table 5. ESD Test Levels

1A—CONTACT DISCHARGE		1B—AIR-GAP DISCHARGE	
LEVEL	**TEST VOLTAGE (kV)**	**LEVEL**	**TEST VOLTAGE (kV)**
1	2	1	2
2	4	2	4
3	6	3	8
4	8	4	10
X	Special	X	Special

X = Open level. The level has to be specified in the dedicated equipment specification. If higher voltages than those shown are specified, special test equipment could be needed.

Table 6. ESD Waveform Parameters

LEVEL	INDICATED VOLTGE (kV)	FIRST PEAK OF CURRENT DISCHARGE ±10% (A)	RISE TIME (t_r) WITH DISCHARGE SWITCH (ns)	CURRENT (±30%) AT 30ns (A)	CURRENT (±30%) AT 60ns (A)
1	2	7.5	0.7 to 1	4	2
2	4	15	0.7 to 1	8	4
3	6	22.5	0.7 to 1	12	6
4	8	30	0.7 to 1	16	8

Register Tables

Table 7. Keys FIFO Register Format (0x00)

SPECIAL FUNCTION	KEYS FIFO REGISTER DATA							
	D7	D6	D5	D4	D3	D2	D1	D0
The key number indicated by D5:D0 is a key event. D7 is always for a key press of key 62 and key 63. When D7 is 0, the key read is the last data in the FIFO. When D7 is 1, there is more data in the FIFO. When D6 is 1, key data read from FIFO is a key release. When D6 is 0, key data read from FIFO is a key press.	FIFO empty flag	Key release flag	X	X	X	X	X	X
FIFO is empty.	0	0	1	1	1	1	1	1
FIFO is overflow. Continue to read data in FIFO	0	1	1	1	1	1	1	1
Key 63 is pressed. Read one more time to determine whether there is more data in FIFO.	1	0	1	1	1	1	1	1
Key 63 is released. Read one more time to determine whether there is more data in FIFO.	1	1	1	1	1	1	1	1
Key repeat. Indicates the last data in FIFO.	0	0	1	1	1	1	1	0
Key repeat. Indicates more data in FIFO.	0	1	1	1	1	1	1	0
Key 62 is pressed. Read one more time to determine whether there is more data in FIFO.	1	0	1	1	1	1	1	0
Key 62 is released. Read one more time to determine whether there is more data in FIFO.	1	1	1	1	1	1	1	0

Table 8. Configuration Register Format (0x01)

REGISTER BIT	DESCRIPTION	VALUE	FUNCTION		DEFAULT VALUE
D7	Sleep	X (when 0x40 D4 = 1)	Key-switch operating mode. Key switches always remain active when constant-current PWM is enabled (bit 4 of register 0x40 is high) regardless of autosleep, autowakeup, or an I²C write to this bit.		0
		0 (when 0x40 D4 = 0)	Key-switch sleep mode. The entire chip is shut down.	When constant-current PWM is disabled (bit 4 of register 0x40 is low), I²C write, autosleep, and autowakeup all can change this bit. This bit can be read back by I²C any time for current status.	
		1 (when 0x40 D4 = 0)	Key-switch operating mode		
D6	Reserved	0	—		0
D5	Interrupt	0	$\overline{INTK}$ cleared when FIFO is empty		0
		1	$\overline{INTK}$ cleared after host read. In this mode, I²C should read the FIFO until interrupt condition is removed or further INT may be lost.		
D4	Reserved	0	—		0
D3	Key-release enable	0	Disable key releases		1
		1	Enable key releases		
D2	Reserved	0	—		0
D1	Autowakeup enable	0	Disable keypress wakeup		1
		1	Enable keypress wakeup		
D0	Timeout disable	0	I²C timeout enabled		0
		1	I²C timeout disabled		

Table 9. Debounce Register Format (0x02)

REGISTER DESCRIPTION	REGISTER DATA							
	D7	D6	D5	D4	D3	D2	D1	D0
	PORTS ENABLE			DEBOUNCE TIME				
Debounce time is 9ms	X	X	X	0	0	0	0	0
Debounce time is 10ms	X	X	X	0	0	0	0	1
Debounce time is 11ms	X	X	X	0	0	0	1	0
Debounce time is 12ms	X	X	X	0	0	0	1	1
⋮								
Debounce time is 37ms	X	X	X	1	1	1	0	0
Debounce time is 38ms	X	X	X	1	1	1	0	1
Debounce time is 39ms	X	X	X	1	1	1	1	0
Debounce time is 40ms	X	X	X	1	1	1	1	1
GPO ports disabled (full key-scan functionality)	0	0	0	X	X	X	X	X
GPO port 7 enabled	0	0	1	X	X	X	X	X
GPO ports 7 and 6 enabled	0	1	0	X	X	X	X	X

Table 9. Debounce Register Format (0x02) (continued)

REGISTER DESCRIPTION	REGISTER DATA							
	D7	D6	D5	D4	D3	D2	D1	D0
	PORTS ENABLE			DEBOUNCE TIME				
GPO ports 7, 6, and 5 enabled	0	1	1	X	X	X	X	X
GPO ports 7, 6, 5, and 4 enabled	1	0	0	X	X	X	X	X
GPO ports 7, 6, 5, 4, and 3 enabled	1	0	1	X	X	X	X	X
GPO ports 7, 6, 5, 4, 3, and 2 enabled	1	1	X	X	X	X	X	X
Power-up default setting	**1**	**1**	**1**	**1**	**1**	**1**	**1**	**1**

Table 10. Key-Switch Interrupt Register Format (0x03)

REGISTER DESCRIPTION	REGISTER DATA							
	D7	D6	D5	D4	D3	D2	D1	D0
	FIFO-BASED $\overline{INTK}$			TIME-BASED $\overline{INTK}$				
$\overline{INTK}$ used as GPO	0	0	0	0	0	0	0	0
FIFO-based $\overline{INTK}$ disabled	0	0	0	Not all zero				
$\overline{INTK}$ asserts every debounce cycle	0	0	0	0	0	0	0	1
$\overline{INTK}$ asserts every 2 debounce cycles	0	0	0	0	0	0	1	0
⋮								
$\overline{INTK}$ asserts every 29 debounce cycles	0	0	0	1	1	1	0	1
$\overline{INTK}$ asserts every 30 debounce cycles	0	0	0	1	1	1	1	0
$\overline{INTK}$ asserts every 31 debounce cycles	0	0	0	1	1	1	1	1
Time-based $\overline{INTK}$ disabled	Not all zero			0	0	0	0	0
$\overline{INTK}$ asserts when FIFO has 4 key events	0	0	1	0	0	0	0	0
$\overline{INTK}$ asserts when FIFO has 6 key events	0	1	0	0	0	0	0	0
$\overline{INTK}$ asserts when FIFO has 8 key events	0	1	1	0	0	0	0	0
⋮								
$\overline{INTK}$ asserts when FIFO has 14 key events	1	1	1	0	0	0	0	0
Both time-based and FIFO-based interrupts active	Not all zero			Not all zero				
Power-up default setting	**0**	**0**	**0**	**0**	**0**	**0**	**0**	**0**

Table 11. Ports Register Format (0x04)

REGISTER BIT	DESCRIPTION	VALUE	FUNCTION	DEFAULT VALUE
D7	PORT 7 Control	0	Clear port 7 low	1
		1	Set port 7 high (high impedance)	
D6	PORT 6 Control	0	Clear port 6 low	1
		1	Set port 6 high (high impedance)	
D5	PORT 5 Control	0	Clear port 5 low	1
		1	Set port 5 high (high impedance)	
D4	PORT 4 Control	0	Clear port 4 low	1
		1	Set port 4 high (high impedance)	
D3	PORT 3 Control	0	Clear port 3 low	1
		1	Set port 3 high (high impedance)	
D2	PORT 2 Control	0	Clear port 2 low	1
		1	Set port 2 high (high impedance)	
D1	$\overline{\text{INTK}}$ Port Control	0	Clear port $\overline{\text{INTK}}$ low	1
		1	Set port $\overline{\text{INTK}}$ high (high impedance)	
D0	Reserved	0	—	0

Table 12. Autorepeat Register Format (0x05)

REGISTER DESCRIPTION	REGISTER DATA							
	D7	D6	D5	D4	D3	D2	D1	D0
	ENABLE	AUTOREPEAT RATE			AUTOREPEAT DELAY			
Autorepeat is disabled	0	X	X	X	X	X	X	X
Autorepeat is enabled	1	AUTOREPEAT RATE			AUTOREPEAT DELAY			
Key-switch autorepeat delay is 8 debounce cycles	1	X	X	X	0	0	0	0
Key-switch autorepeat delay is 16 debounce cycles	1	X	X	X	0	0	0	1
Key-switch autorepeat delay is 24 debounce cycles	1	X	X	X	0	0	1	0
				⋮				
Key-switch autorepeat delay is 112 debounce cycles	1	X	X	X	1	1	0	1
Key-switch autorepeat delay is 120 debounce cycles	1	X	X	X	1	1	1	0
Key-switch autorepeat delay is 128 debounce cycles	1	X	X	X	1	1	1	1
Key-switch autorepeat frequency is 4 debounce cycles	1	0	0	0	X	X	X	X
Key-switch autorepeat frequency is 8 debounce cycles	1	0	0	1	X	X	X	X
Key-switch autorepeat frequency is 12 debounce cycles	1	0	1	0	X	X	X	X
				⋮				
Key-switch autorepeat frequency is 32 debounce cycles	1	1	1	1	X	X	X	X
Power-up default setting	**0**	**0**	**0**	**0**	**0**	**0**	**0**	**0**

Table 13. Autosleep Register Format (0x06)

REGISTER	REGISTER DATA							
AUTOSLEEP REGISTER	RESERVED				AUTOSHUTDOWN TIME			
	D7	D6	D5	D4	D3	D2	D1	D0
No Autosleep	0	0	0	0	0	0	0	0
Autosleep for (ms)								
8192	0	0	0	0	0	0	0	1
4096	0	0	0	0	0	0	1	0
2048	0	0	0	0	0	0	1	1
1024	0	0	0	0	0	1	0	0
512	0	0	0	0	0	1	0	1
256	0	0	0	0	0	1	1	0
256	0	0	0	0	0	1	1	1
Power-up default settings	0	0	0	0	0	1	1	1

Table 14. GPIO Global Configuration Register (0x40)

REGISTER BIT	DESCRIPTION	VALUE	FUNCTION	DEFAULT VALUE
D7	PORT6/PORT7 rotary switch	0	PORT6/PORT7 operate as GPIOs	0
		1	PORT6/PORT7 operate as a rotary switch input	
D6	Reserved	0	—	0
D5	I²C timeout interrupt enable	0	Disabled	0
		1	$\overline{INTI}$ is asserted when I²C bus times out. $\overline{INTI}$ is deasserted when a read is performed on the I²C timeout flag register (0x48).	
D4	GPIO enable	0	PWM, constant-current circuits, and GPIs are shut down. GPO values depend on their setting. Register 0x41 to 0x5F values are stored and cannot be changed. The entire part is shut down if the key switches are in sleep mode (D7 of register 0x01).	0
		1	Normal GPIO operation. PWM, constant-current circuits, and GPIOs are enabled regardless of key-switch sleep mode state (see Table 8).	
D3	GPIO reset	0	Normal operation	0
		1	Return all GPIO registers (registers 0x40 to 0x5F) to their POR value. This bit is momentary and resets itself to 0 after the write cycle.	
D[2:0]	Fade in/out time	000	No fading	000
		XXX	PWM intensity ramps up (down) between the common PWM value and 0% duty cycle in 16 steps over the following time period: D[2:0] = 001 = 256ms D[2:0] = 010 = 512ms D[2:0] = 011 = 1024ms D[2:0] = 100 = 2048ms D[2:0] = 101 = 4096ms D[2:0] = 110/111 = Undefined	

Table 15. GPIO Control Register (0x41)

REGISTER BIT	DESCRIPTION	VALUE	FUNCTION	DEFAULT VALUE
D7	PORT7	0	Port is an input	0
		1	Port is an output	
D6	PORT6	0	Port is an input	0
		1	Port is an output	
D5	PORT5	0	Port is an input	0
		1	Port is an output	
D4	PORT4	0	Port is an input	0
		1	Port is an output	
D3	PORT3	0	Port is an input	0
		1	Port is an output	
D2	PORT2	0	Port is an input	0
		1	Port is an output	
D1	PORT1	0	Port is an input	0
		1	Port is an output	
D0	PORT0	0	Port is an input	0
		1	Port is an output	

Table 16. GPIO Debounce Configuration Register (0x42)

REGISTER DESCRIPTION	REGISTER DATA							
	D7	D6	D5	D4	D3	D2	D1	D0
	RESERVED			DEBOUNCE TIME				
Power-up default setting debounce time is 9ms	**0**	**0**	**0**	**0**	**0**	**0**	**0**	**0**
Debounce time is 10ms	0	0	0	0	0	0	0	1
Debounce time is 11ms	0	0	0	0	0	0	1	0
Debounce time is 12ms	0	0	0	0	0	0	1	1
. . .								
Debounce time is 37ms	0	0	0	1	1	1	0	0
Debounce time is 38ms	0	0	0	1	1	1	0	1
Debounce time is 39ms	0	0	0	1	1	1	1	0
Debounce time is 40ms	0	0	0	1	1	1	1	1

Table 17. GPIO Constant-Current Setting Register (0x43)

REGISTER BIT	DESCRIPTION	VALUE	FUNCTION	DEFAULT VALUE
D[7:6]	Reserved	11	Set always as 11	11
D[5:2]	Reserved	0000	—	0000
D[1:0]	Constant-current setting	00	Constant current is 5mA	00
		01	Constant current is 6.67mA	
		10	Constant current is 10mA	
		11	Constant current is 20mA	

Table 18. GPIO Output Mode Register (0x44)

REGISTER BIT	DESCRIPTION	VALUE	FUNCTION	DEFAULT VALUE
D7	PORT7	0	Port is a constant-current open-drain output	0
		1	Port is a non-constant-current open-drain output	
D6	PORT6	0	Port is a constant-current open-drain output	0
		1	Port is a non-constant-current open-drain output	
D5	PORT5	0	Port is a constant-current open-drain output	0
		1	Port is a non-constant-current open-drain output	
D4	PORT4	0	Port is a constant-current open-drain output	0
		1	Port is a non-constant-current open-drain output	
D3	PORT3	0	Port is a constant-current open-drain output	0
		1	Port is a non-constant-current open-drain output	
D2	PORT2	0	Port is a constant-current open-drain output	0
		1	Port is a non-constant-current open-drain output	
D1	PORT1	0	Port is a constant-current open-drain output	0
		1	Port is a non-constant-current open-drain output	
D0	PORT0	0	Port is a constant-current open-drain output	0
		1	Port is a non-constant-current open-drain output	

Table 19. Common PWM Register (0x45)

REGISTER DESCRIPTION	REGISTER DATA							
	D7	D6	D5	D4	D3	D2	D1	D0
	COMMON PWM							
Power-up default setting (common PWM ratio is 0/256)	**0**	**0**	**0**	**0**	**0**	**0**	**0**	**0**
Common PWM ratio is 1/256	0	0	0	0	0	0	0	1
Common PWM ratio is 2/256	0	0	0	0	0	0	1	0
Common PWM ratio is 3/256	0	0	0	0	0	0	1	1
⋮								

Table 19. Common PWM Register (0x45) (continued)

REGISTER DESCRIPTION	REGISTER DATA							
	D7	D6	D5	D4	D3	D2	D1	D0
	COMMON PWM							
Common PWM ratio is 252/256	1	1	1	1	1	1	0	0
Common PWM ratio is 253/256	1	1	1	1	1	1	0	1
Common PWM ratio is 254/256	1	1	1	1	1	1	1	0
Common PWM ratio is **256/256** (100% duty cycle)	1	1	1	1	1	1	1	1

Table 20. Rotary Switch Configuration Register (0x46)

REGISTER DESCRIPTION	REGISTER DATA							
	D7	D6	D5	D4	D3	D2	D1	D0
	INT TYPE	COUNTS/CYCLES			DEBOUNCE CYCLE TIME			
No debounce time	X	X	X	X	0	0	0	0
Debounce time is 1ms	X	X	X	X	0	0	0	1
Debounce time is 2ms	X	X	X	X	0	0	1	0
Debounce time is 3ms	X	X	X	X	0	0	1	1
		. . .						
Debounce time is 15ms	X	X	X	X	1	1	1	1
No interrupt generated by rotary switch	X	0	0	0	X	X	X	X
$\overline{INTI}$ asserted when rotary switch count = ±1	0	0	0	1	X	X	X	X
$\overline{INTI}$ asserted when rotary switch count = ±2	0	0	1	0	X	X	X	X
$\overline{INTI}$ asserted when rotary switch count = ±3	0	0	1	1	X	X	X	X
		. . .						
$\overline{INTI}$ asserted when rotary switch count = ±7	0	1	1	1	X	X	X	X
$\overline{INTI}$ asserted 25ms after first debounced event	1	0	0	1	X	X	X	X
$\overline{INTI}$ asserted 50ms after first debounced event	1	0	1	0	X	X	X	X
$\overline{INTI}$ asserted 75ms after first debounced event	1	0	1	1	X	X	X	X
		. . .						
$\overline{INTI}$ asserted 175ms after first debounced event	1	1	1	1	X	X	X	X
Power-up default setting	**0**	**0**	**0**	**0**	**0**	**0**	**0**	**0**

Table 21. I²C Timeout Flag Register (0x48) (Read Only)

REGISTER BIT	DESCRIPTION	VALUE	FUNCTION	DEFAULT VALUE
D[7:1]	Reserved	0000000	—	0000000
D0	I²C timeout flag	0	No I²C timeout has occurred since last read or POR	0
		1	I²C timeout has occurred since last read or POR. This bit is reset to zero when a read is performed on this register. I²C timeouts must be enabled for this function to work (see Table 8).	

Table 22. GPIO Input Register (0x49) (Read Only)

REGISTER BIT	DESCRIPTION	VALUE	FUNCTION	DEFAULT VALUE
D7	PORT7	0	Port is input low	1
		1	Port is input high	
D6	PORT6	0	Port is input low	1
		1	Port is input high	
D5	PORT5	0	Port is input low	1
		1	Port is input high	
D4	PORT4	0	Port is input low	1
		1	Port is input high	
D3	PORT3	0	Port is input low	1
		1	Port is input high	
D2	PORT2	0	Port is input low	1
		1	Port is input high	
D1	PORT1	0	Port is input low	1
		1	Port is input high	
D0	PORT0	0	Port is input low	1
		1	Port is input high	

Table 23. Rotary Switch Count Register (0x4A) (Read Only)

REGISTER DESCRIPTION	REGISTER DATA							
	D7	D6	D5	D4	D3	D2	D1	D0
	CYCLE COUNT							
Cycle count in two's complement (see the *Rotary Switch Configuration Register (0x46)* section)	X	X	X	X	X	X	X	X

Table 24. PORT0–PORT7 Individual PWM Ratio Registers (0x50 to 0x57)

REGISTER DESCRIPTION	REGISTER DATA							
	D7	D6	D5	D4	D3	D2	D1	D0
	PORT PWM							
Power-up default setting (port PWM ratio is 0/256)	**0**	**0**	**0**	**0**	**0**	**0**	**0**	**0**
PORT PWM ratio is 1/256	0	0	0	0	0	0	0	1
PORT PWM ratio is 2/256	0	0	0	0	0	0	1	0
PORT PWM ratio is 3/256	0	0	0	0	0	0	1	1
	. . .							
PORT PWM ratio is 252/256	1	1	1	1	1	1	0	0
PORT PWM ratio is 253/256	1	1	1	1	1	1	0	1
PORT PWM ratio is 254/256	1	1	1	1	1	1	1	0
PORT PWM ratio is **256/256** (100% duty cycle)	1	1	1	1	1	1	1	1

Table 25. PORT0–PORT7 Configuration Registers (0x58 to 0x5F)

REGISTER BIT	DESCRIPTION	VALUE	FUNCTION		DEFAULT VALUE
D7	Interrupt mask	0	Interrupt is not masked		0
		1	Interrupt is masked. PORT7 interrupt mask is ignored when the device is configured for rotary switch input.		
D6	Edge/level detect	0	Rising edge-triggered interrupts	Interrupts only occur when the GPIO port is configured as an input	0
		1	Rising or falling edge-triggered interrupts		
D5	Common PWM	0	Port uses individual PWM intensity register to set the PWM ratio		0
		1	Port uses common PWM intensity register to set the PWM ratio		
D[4:2]	Blink period	000	Port does not blink		000
		001	Port blink period is 256ms		
		010	Port blink period is 512ms		
		011	Port blink period is 1024ms		
		100	Port blink period is 2048ms		
		101	Port blink period is 4096ms		
		110/111	Undefined		
D[1:0]	Blink-on time	00	LED is on for 50% of the blink period		00
		01	LED is on for 25% of the blink period		
		10	LED is on for 12.5% of the blink period		
		11	LED is on for 6.25% of the blink period		

Typical Application Circuit

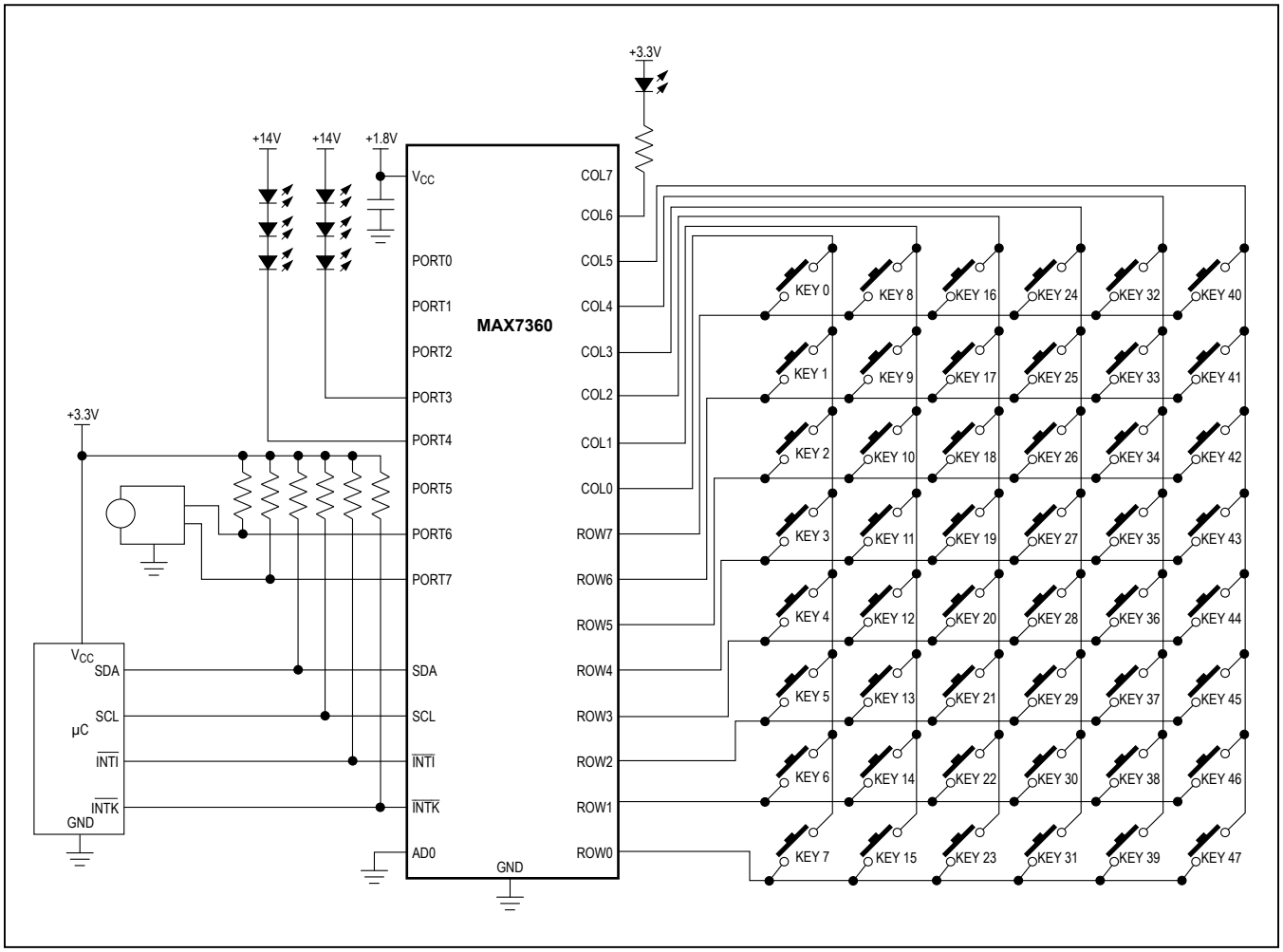

Chip Information

PROCESS: BiCMOS

Package Information

For the latest package outline information and land patterns (footprints), go to **www.maximintegrated.com/packages**. Note that a "+", "#", or "-" in the package code indicates RoHS status only. Package drawings may show a different suffix character, but the drawing pertains to the package regardless of RoHS status.

PACKAGE TYPE	PACKAGE CODE	DOCUMENT NO.
40 TQFN-EP	T4055+1	21-0140
36 WLP	W362A2+1	21-0301

Revision History

REVISION NUMBER	REVISION DATE	DESCRIPTION	PAGES CHANGED
0	4/09	Initial release	—
1	8/10	Updated *Absolute Maximum Ratings* and Notes 7 and 8 (now Notes 6 and 7) in *Electrical Characteristics*	2, 3, 4
2	1/13	Added the *Package Thermal Characteristics* section; updated the Δf_{OSC} min and max values in the *Electrical Characteristics*	2
3	7/19	Updated *Blink* section	13

For pricing, delivery, and ordering information, please visit Maxim Integrated's online storefront at https://www.maximintegrated.com/en/storefront/storefront.html.

Maxim Integrated cannot assume responsibility for use of any circuitry other than circuitry entirely embodied in a Maxim Integrated product. No circuit patent licenses are implied. Maxim Integrated reserves the right to change the circuitry and specifications without notice at any time. The parametric values (min and max limits) shown in the Electrical Characteristics table are guaranteed. Other parametric values quoted in this data sheet are provided for guidance.