19-3075; Rev 4; 1/11

Low-Power, Single/Dual-Voltage Window Detectors

General Description

The MAX6754–MAX6764 low-power window detectors monitor undervoltage/overvoltage conditions on system power supplies. These devices assert when the monitored voltage is under the undervoltage and/or over the overvoltage thresholds.

The MAX6754–MAX6759/MAX6763/MAX6764 monitor a single voltage. The MAX6760/MAX6761/MAX6762 monitor dual-voltage systems. The MAX6754/MAX6755/MAX6756 provide a single undervoltage/overvoltage output and the MAX6757–MAX6764 provide independent undervoltage and overvoltage outputs. The outputs are available in push-pull or open-drain configurations.

The MAX6754–MAX6762 offer factory-fixed voltage thresholds for monitoring system voltages from 0.9V to 5V with a selectable ±5%, ±10%, or ±15% window voltage. The MAX6763/MAX6764 allow for externally adjustable thresholds. The MAX6754–MAX6762 are available in two delay timing options (20µs, typ or 100ms, min). The MAX6760/MAX6761/MAX6762 also include a latched overvoltage output function and the MAX6754–MAX6762 include a manual reset input.

The family of products is available in small SOT23 and TDFN packages and is specified over the extended temperature range of -40°C to +125°C.

Applications

Telecommunications
Networking
Computers/Servers
Data Storage
Power Metering
DC-DC Converter Modules
Automotive

Typical Application Circuit

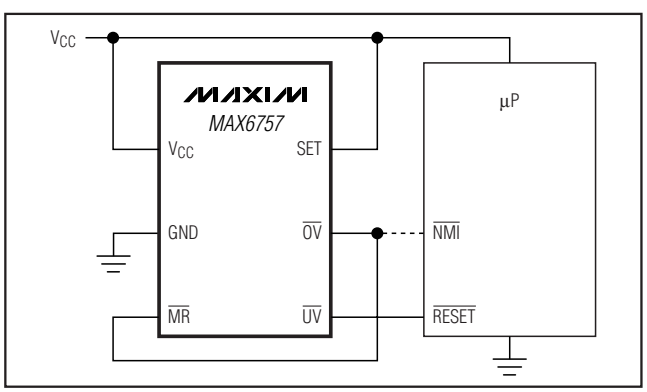

Features

- **Single- or Dual-Supply Voltage Monitors**
- **Factory-Trimmed Window Threshold Options for 5V, 3.3V, 3V, 2.5V, 1.8V, 1.5V, 1.2V, and 0.9V Supplies**
- **Externally Adjustable Window Monitoring Options for Supplies Down to 0.5V**
- **Selectable Window Threshold Options (±5%, ±10%, ±15%)**
- **Single (Combined UV/OV) or Dual (Separate UV and OV) Outputs**
- **20µs (typ) or 100ms (min) Timeout Period Options (MAX6754–MAX6762)**
- **Manual Reset Input (MAX6754–MAX6762)**
- **Latched Overvoltage Output Function (MAX6760/MAX6761/MAX6762)**
- **Immune to Short Voltage Transients**
- **Low 10µA Supply Current**
- **Low-Voltage Operation (Outputs Valid for V_{CC} Down to 1V)**
- **-40°C to +125°C Operating Temperature Range**
- **Small SOT23 and TDFN Packages**

Ordering Information

PART*	TEMP RANGE	PIN-PACKAGE
MAX6754UK_D_-T	-40°C to +125°C	5 SOT23-5
MAX6755UK_D_-T	-40°C to +125°C	5 SOT23-5
MAX6756UK_D_-T	-40°C to +125°C	5 SOT23-5
MAX6757UT_D_-T	-40°C to +125°C	6 SOT23-6
MAX6758UT_D_-T	-40°C to +125°C	6 SOT23-6

**Insert the threshold level suffixes for V_{CC} and V_{CC2} (Tables 1 and 2) after UK, UT, or TA. For the MAX6754–MAX6759, insert only the V_{CC} threshold suffix after the UK or UT. Insert the reset timeout delay (Table 3) after D to complete the part number. For example, the MAX6760TALTD3-T provides a V_{CC} threshold of 5V, a V_{CC2} threshold of 3.3V, and a 100ms minimum reset timeout period. Sample stock is generally held on standard versions only (see the Standard Versions table). Standard versions have an order increment requirement of 2500 pieces. Nonstandard versions have an order increment requirement of 10,000 pieces. Contact factory for availability.*

Devices are available in both leaded and lead-free packaging. Specify lead-free by replacing "-T" with "+T" when ordering.

Ordering Information continued at end of data sheet.
Pin Configurations appear at end of data sheet.

For pricing, delivery, and ordering information, please contact Maxim Direct at 1-888-629-4642, or visit Maxim's website at www.maxim-ic.com.

Low-Power, Single/Dual-Voltage Window Detectors

ABSOLUTE MAXIMUM RATINGS

(Voltages with respect to GND.)
V_{CC}, V_{CC2}, ...-0.3V to +6.5V
SET, OVLATCH, MR, UVIN, OVIN .....-0.3V to (V_{CC} + 0.3V)
UV, RESET, OV (open drain).....-0.3V to +6.5V
RESET, OV, UV, UV, RESET (push-pull).....-0.3V to (V_{CC} + 0.3V)
Input/Output Current (all pins) 20mA
Continuous Power Dissipation (T_A = +70°C)
5-Pin SOT23-5 (derate 7.1mW/°C above T_A = +70°C)....571mW
6-Pin SOT23-6 (derate 8.7mW/°C above T_A = +70°C)....696mW
8-Pin TDFN (derate 24.4mW/°C above T_A = +70°C).....1951mW
Operating Temperature Range .....-40°C to +125°C
Junction Temperature.....+150°C
Storage Temperature Range .....-65°C to +150°C
Lead Temperature (soldering, 10s) .....+300°C
Soldering Temperature (reflow)
Lead(Pb)-Free Package.....+260°C
Containing Lead(Pb).....+240°C

Stresses beyond those listed under "Absolute Maximum Ratings" may cause permanent damage to the device. These are stress ratings only, and functional operation of the device at these or any other conditions beyond those indicated in the operational sections of the specifications is not implied. Exposure to absolute maximum rating conditions for extended periods may affect device reliability.

ELECTRICAL CHARACTERISTICS

(V_{CC} = 1.0V to 6.0V, V_{CC2} = 0 to 6.0V (MAX6760–MAX6762), T_A = -40°C to +125°C, unless otherwise noted. Typical values are at T_A = +25°C.) (Note 1)

PARAMETER	SYMBOL	CONDITIONS			MIN	TYP	MAX	UNITS
POWER REQUIREMENTS								
Operating Voltage Range	V_{CC}	(Note 2)			1.0		6.0	V
		MAX6760TAAA/MAX6761TAAA/ MAX6762TAAA/MAX6763/MAX6764UT-T			1.4		6.0	
V_{CC} Supply Current	I_{CC}	V_{CC} = 3.6V, MAX6754–MAX6759, no load				13	30	µA
		V_{CC} = 3.6V, MAX6763/MAX6764, no load				10	23	
		V_{CC} = 3.6V, $V_{CC} \geq V_{CC2}$, MAX6760/MAX6761/MAX6762, no load				13	30	
V_{CC2} Supply Current	I_{CC2}	V_{CC2} = 1.8V, $V_{CC} \geq V_{CC2}$, MAX6760/MAX6761/MAX6762				1	1.5	µA
Adjustable Bias Current		V_{CC2} (MAX6760–MAX6762TA_AD_) (Note 3)			-20		+20	nA
V_{CC} THRESHOLD								
V_{CC} Overvoltage Threshold	OV_{TH}	T_A = -40°C to +125°C, rising V_{CC}	L, 5V	V_{SET} = V_{SB}	5.750	5.875	6.000	V
				SET = V_{CC}	5.500	5.625	5.750	
				SET = GND	5.250	5.375	5.500	
			T, 3.3V	V_{SET} = V_{SB}	3.795	3.878	3.960	
				SET = V_{CC}	3.630	3.713	3.795	
				SET = GND	3.465	3.548	3.630	
			R, 3.0V	V_{SET} = V_{SB}	3.450	3.525	3.600	
				SET = V_{CC}	3.300	3.375	3.450	
				SET = GND	3.150	3.225	3.300	
			Z, 2.5V	V_{SET} = V_{SB}	2.875	2.938	3.000	
				SET = V_{CC}	2.750	2.813	2.875	
				SET = GND	2.625	2.688	2.750	
			W, 1.8V	V_{SET} = V_{SB}	2.070	2.115	2.160	
				SET = V_{CC}	1.980	2.025	2.070	
				SET = GND	1.890	1.935	1.980	

ELECTRICAL CHARACTERISTICS (continued)

(V_{CC} = 1.0V to 6.0V, V_{CC2} = 0 to 6.0V (MAX6760–MAX6762), T_A = -40°C to +125°C, unless otherwise noted. Typical values are at T_A = +25°C.) (Note 1)

PARAMETER	SYMBOL	CONDITIONS			MIN	TYP	MAX	UNITS
V_{CC} Undervoltage Threshold	UV_{TH}	T_A = -40°C to +125°C, falling V_{CC}	L, 5V	V_{SET} = V_{SB}	4.000	4.125	4.250	V
				SET = V_{CC}	4.250	4.375	4.500	
				SET = GND	4.500	4.625	4.750	
			T, 3.3V	V_{SET} = V_{SB}	2.640	2.723	2.805	
				SET = V_{CC}	2.805	2.888	2.970	
				SET = GND	2.970	3.053	3.135	
			R, 3.0V	V_{SET} = V_{SB}	2.400	2.475	2.550	
				SET = V_{CC}	2.550	2.625	2.700	
				SET = GND	2.700	2.775	2.850	
			Z, 2.5V	V_{SET} = V_{SB}	2.000	2.063	2.125	
				SET = V_{CC}	2.125	2.188	2.250	
				SET = GND	2.250	2.313	2.375	
			W, 1.8V	V_{SET} = V_{SB}	1.440	1.485	1.530	
				SET = V_{CC}	1.530	1.575	1.620	
				SET = GND	1.620	1.665	1.710	
V_{CC2} Overvoltage Threshold	OV_{TH2}	T_A = -40°C to +125°C, rising V_{CC2}	T, 3.3V	V_{SET} = V_{SB}	3.795	3.878	3.960	V
				SET = V_{CC}	3.630	3.713	3.795	
				SET = GND	3.465	3.548	3.630	
			R, 3.0V	V_{SET} = V_{SB}	3.450	3.525	3.600	
				SET = V_{CC}	3.300	3.375	3.450	
				SET = GND	3.150	3.225	3.300	
			Z, 2.5V	V_{SET} = V_{SB}	2.875	2.938	3.000	
				SET = V_{CC}	2.750	2.813	2.875	
				SET = GND	2.625	2.688	2.750	
			W, 1.8V	V_{SET} = V_{SB}	2.070	2.115	2.160	
				SET = V_{CC}	1.980	2.025	2.070	
				SET = GND	1.890	1.935	1.980	
			I, 1.5V	V_{SET} = V_{SB} (Note 2)	1.725	1.763	1.800	
				SET = V_{CC} (Note 2)	1.650	1.688	1.725	
				SET = GND (Note 2)	1.575	1.613	1.650	
			G, 1.2V	V_{SET} = V_{SB} (Note 2)	1.380	1.410	1.440	
				SET = V_{CC} (Note 2)	1.320	1.350	1.380	
				SET = GND (Note 2)	1.260	1.290	1.320	
			E, 0.9V	V_{SET} = V_{SB} (Note 2)	1.035	1.058	1.080	
				SET = V_{CC} (Note 2)	0.990	1.013	1.035	
				SET = GND (Note 2)	0.945	0.968	0.990	
			ADJ	V_{SET} = V_{SB}	0.489	0.500	0.511	
				SET = V_{CC}	0.468	0.479	0.489	
				SET = GND	0.447	0.457	0.468	

Low-Power, Single/Dual-Voltage Window Detectors

ELECTRICAL CHARACTERISTICS (continued)

(V_{CC} = 1.0V to 6.0V, V_{CC2} = 0 to 6.0V (MAX6760–MAX6762), T_A = -40°C to +125°C, unless otherwise noted. Typical values are at T_A = +25°C.) (Note 1)

PARAMETER	SYMBOL	CONDITIONS			MIN	TYP	MAX	UNITS
V_{CC2} Undervoltage Threshold	UV_{TH2}	T_A = -40°C to +125°C, falling V_{CC2}	T, 3.3V	V_{SET} = V_{SB}	2.640	2.723	2.805	V
				SET = V_{CC}	2.805	2.888	2.970	
				SET = GND	2.970	3.053	3.135	
			R, 3.0V	V_{SET} = V_{SB}	2.400	2.475	2.550	
				SET = V_{CC}	2.550	2.625	2.700	
				SET = GND	2.700	2.775	2.850	
			Z, 2.5V	V_{SET} = V_{SB}	2.000	2.063	2.125	
				SET = V_{CC}	2.125	2.188	2.250	
				SET = GND	2.250	2.313	2.375	
			W, 1.8V	V_{SET} = V_{SB}	1.440	1.485	1.530	
				SET = V_{CC}	1.530	1.575	1.620	
				SET = GND	1.620	1.665	1.710	
			I, 1.5V	V_{SET} = V_{SB} (Note 2)	1.200	1.238	1.275	
				SET = V_{CC} (Note 2)	1.275	1.313	1.350	
				SET = GND (Note 2)	1.350	1.388	1.425	
			G, 1.2V	V_{SET} = V_{SB} (Note 2)	0.960	0.990	1.020	
				SET = V_{CC} (Note 2)	1.020	1.050	1.080	
				SET = GND (Note 2)	1.080	1.110	1.140	
			E, 0.9V	V_{SET} = V_{SB} (Note 2)	0.720	0.743	0.765	
				SET = V_{CC} (Note 2)	0.765	0.788	0.810	
				SET = GND (Note 2)	0.810	0.833	0.855	
			ADJ	V_{SET} = V_{SB}	0.340	0.351	0.362	
				SET = V_{CC}	0.362	0.372	0.383	
				SET = GND	0.383	0.394	0.404	
Threshold Hysteresis	V_{HYST}	V_{CC}, V_{CC2}				0.7		%
UNDERVOLTAGE/OVERVOLTAGE INPUTS (UVIN, OVIN) (MAX6763/MAX6764)								
UVIN, OVIN Threshold Voltage	V_{TH-IN}				0.485	0.5	0.515	V
UVIN, OVIN Input Bias Current	I_{IN}	(Note 3)			-20		+20	nA
UVIN, OVIN Threshold Hysteresis	V_{HYST}					0.7		%

ELECTRICAL CHARACTERISTICS (continued)

(V_{CC} = 1.0V to 6.0V, V_{CC2} = 0 to 6.0V (MAX6760–MAX6762), T_A = -40°C to +125°C, unless otherwise noted. Typical values are at T_A = +25°C.) (Note 1)

PARAMETER	SYMBOL	CONDITIONS		MIN	TYP	MAX	UNITS
TIMING CHARACTERISTICS							
Reset and UV Timeout Period	t_{RP}	Figure 7	D0		20		µs
			D3	100	185	320	ms
V_{CC} to Reset Delay	$t_{D-RESET}$	V_{CC}/V_{CC2} falling at 10mV/µs from UV_{TH} + 100mV to UV_{TH} - 100mV			20		µs
V_{CC} to UV Delay	t_{D-UV}	V_{CC}/V_{CC2} rising at 10mV/µs from OV_{TH} - 100mV to OV_{TH} + 100mV			20		µs
V_{CC} to OV Delay	t_{D-OV}	V_{CC}/V_{CC2} rising at 10mV/µs from OV_{TH} - 100mV to OV_{TH} + 100mV (MAX6757–MAX6762 only)			20		µs
UVIN to UV Delay		(MAX6763/MAX6764)			20		µs
OVIN to OV Delay		(MAX6763/MAX6764)			20		µs
Startup Delay Time	t_{START}	D0 options only, $\overline{OV}$ output (Note 4)			2		ms
THRESHOLD WINDOW SELECT INPUT (SET)							
Input-Voltage Low				0		0.1	V
Input Bias Voltage (Note 5)	V_{SB}	V_{CC} = 1.4V		0.65		0.75	V
		V_{CC} = 3.0V		0.81		2.19	
		V_{CC} = 6.0V		1.10		4.90	
Input-Voltage High				V_{CC} - 0.1		V_{CC}	V
Input Current	I_{SET}			-1		+1	µA
MANUAL RESET ($\overline{MR}$)							
Input-Voltage Low						0.23 x V_{CC}	V
Input-Voltage High				0.6 x V_{CC}			V
Pullup Resistance to V_{CC}					26		kΩ
Minimum Pulse Width				4			µs
Transient Immunity					300		ns
Propagation Delay	t_{D-MR}	$\overline{MR}$ falling, Figure 7			300		ns
	t_{MR_P}	$\overline{MR}$ rising, Figure 7	D0		40		
			D3	100	185	320	ms
OVERVOLTAGE OUTPUT LATCH CONTROL INPUT (OVLATCH)							
Input-Voltage Low						0.3 x V_{CC}	V
Input-Voltage High				0.7 x V_{CC}			V

Low-Power, Single/Dual-Voltage Window Detectors

ELECTRICAL CHARACTERISTICS (continued)

(V_{CC} = 1.0V to 6.0V, V_{CC2} = 0 to 6.0V (MAX6760–MAX6762), T_A = -40°C to +125°C, unless otherwise noted. Typical values are at T_A = +25°C.) (Note 1)

PARAMETER	SYMBOL	CONDITIONS	MIN	TYP	MAX	UNITS
Input Bias Current	$I_{OVLATCH}$		-1		+1	µA
RESET, $\overline{\text{RESET}}$, $\overline{\text{UV}}$, UV, $\overline{\text{OV}}$						
$\overline{\text{RESET}}$, $\overline{\text{UV}}$ Output Low (Open Drain or Push-Pull)	V_{OL}	Any V_{CC} ≥ 1.0V, I_{SINK} = 100µA, output asserted			0.3	V
		Any V_{CC} ≥ 1.2V, I_{SINK} = 200µA, output asserted			0.3	
		Any V_{CC} ≥ 1.71V, I_{SINK} = 1.0mA, output asserted			0.3	
		Any V_{CC} ≥ 2.85V, I_{SINK} = 2.0mA, output asserted			0.3	
		Any V_{CC} ≥ 4.75V, I_{SINK} = 4.0mA, output asserted			0.3	
$\overline{\text{RESET}}$, $\overline{\text{UV}}$ Output High (Push-Pull)	V_{OH}	Any V_{CC} ≥ 1.71V, I_{SOURCE} = 0.8mA, output deasserted	0.8 x V_{CC}			V
		Any V_{CC} ≥ 2.85V, I_{SOURCE} = 2.0mA, output deasserted	0.8 x V_{CC}			
		Any V_{CC} ≥ 4.75V, I_{SOURCE} = 4.0mA, output deasserted	0.8 x V_{CC}			
RESET, UV Output Low (Push-Pull)	V_{OL}	Any V_{CC} ≥ 1.71V, I_{SINK} = 1.0mA, output deasserted			0.3	V
		Any V_{CC} ≥ 2.85V, I_{SINK} = 2.0mA, output deasserted			0.3	
		Any V_{CC} ≥ 4.75V, I_{SINK} = 4.0mA, output deasserted			0.3	
RESET, UV Output High (Push-Pull)	V_{OH}	Any V_{CC} ≥ 1.0V, I_{SOURCE} = 50µA, output asserted	0.8 x V_{CC}			V
		Any V_{CC} ≥ 1.2V, I_{SOURCE} = 100µA, output asserted	0.8 x V_{CC}			
		Any V_{CC} ≥ 1.71V, I_{SOURCE} = 0.8mA, output asserted	0.8 x V_{CC}			
		Any V_{CC} ≥ 2.85V, I_{SOURCE} = 2.0mA, output asserted	0.8 x V_{CC}			
		Any V_{CC} ≥ 4.75V, I_{SOURCE} = 4.0mA, output asserted	0.8 x V_{CC}			

ELECTRICAL CHARACTERISTICS (continued)

(V_{CC} = 1.0V to 6.0V, V_{CC2} = 0 to 6.0V (MAX6760–MAX6762), T_A = -40°C to +125°C, unless otherwise noted. Typical values are at T_A = +25°C.) (Note 1)

PARAMETER	SYMBOL	CONDITIONS	MIN	TYP	MAX	UNITS
$\overline{OV}$ Output Low (Open-Drain or Push-Pull)	V_{OL}	Any $V_{CC} \geq 1.98V$, I_{SINK} = 1.4mA, output asserted			0.3	V
		Any $V_{CC} \geq 2.75V$, I_{SINK} = 2.0mA, output asserted			0.3	
		Any $V_{CC} \geq 3.63V$, I_{SINK} = 3.0mA, output asserted			0.3	
		Any $V_{CC} \geq 5.5V$, I_{SINK} = 4.0mA, output asserted			0.3	
$\overline{OV}$ Output High (Push-Pull)	V_{OH}	Any $V_{CC} \geq 1.0V$, I_{SOURCE} = 50µA, output deasserted	0.8 x V_{CC}			V
		Any $V_{CC} \geq 1.2V$, I_{SOURCE} = 100µA, output deasserted	0.8 x V_{CC}			
		Any $V_{CC} \geq 1.98V$, I_{SOURCE} = 1.4mA, output deasserted	0.8 x V_{CC}			
		Any $V_{CC} \geq 2.75V$, I_{SOURCE} = 2.0mA, output deasserted	0.8 x V_{CC}			
		Any $V_{CC} \geq 3.63V$, I_{SOURCE} = 3.0mA, output deasserted	0.8 x V_{CC}			
		Any $V_{CC} \geq 5.5V$, I_{SOURCE} = 4.5mA, output deasserted	0.8 x V_{CC}			
$\overline{RESET}$, $\overline{UV}$, $\overline{OV}$ Output Open-Drain Leakage Current	I_{LKG}	Output not asserted			1	µA

Note 1: Devices are production tested at +25°C. Overtemperature limits are guaranteed by design.

Note 2: Voltage monitoring requires that V_{CC} must be greater than or equal to 1.4V, but outputs remain asserted in the correct state for V_{CC} down to 1.0V.

Note 3: Guaranteed by design.

Note 4: For D0 window detector options and $\overline{OV}$ outputs, startup delay time is the time required for the internal reference/circuitry to reach specified accuracy after the monitor is powered up from GND.

Note 5: The input bias voltage is based off of V_{CC}. The minimum value is given by the equation (0.1 x V_{CC} + 0.51)V and the maximum value is given by (0.9 x V_{CC} - 0.51)V.

Low-Power, Single/Dual-Voltage Window Detectors

Typical Operating Characteristics

(V_{CC} = 5V, V_{CC2} = 3.3V, T_A = +25°C, unless otherwise noted.)

OVERVOLTAGE THRESHOLD vs. TEMPERATURE

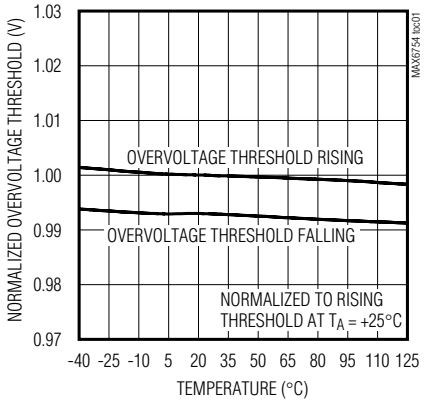

UNDERVOLTAGE THRESHOLD vs. TEMPERATURE

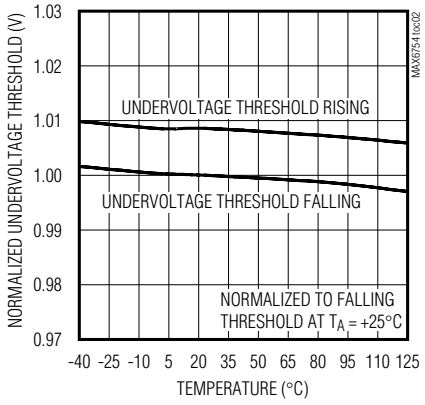

TRANSIENT IMMUNITY vs. THRESHOLD OVERDRIVE

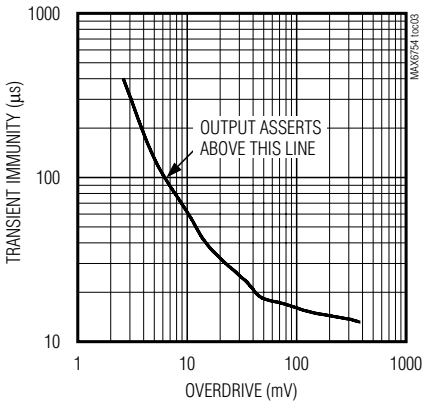

D3 TIMEOUT PERIOD vs. TEMPERATURE

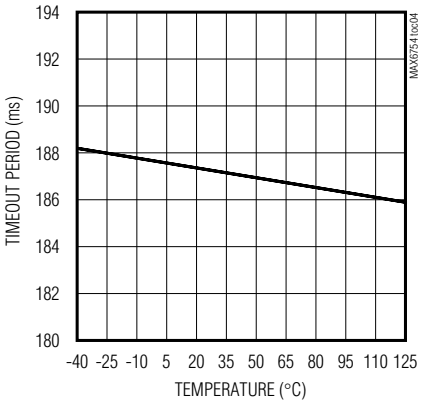

SUPPLY CURRENT vs. SUPPLY VOLTAGE

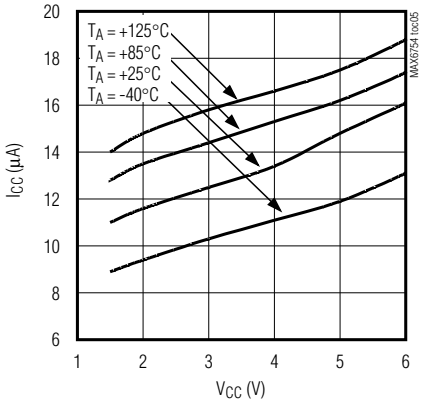

OUTPUT-VOLTAGE LOW vs. SINK CURRENT

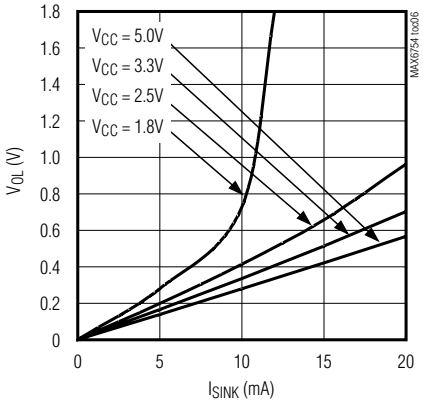

OUTPUT-VOLTAGE HIGH vs. SOURCE CURRENT

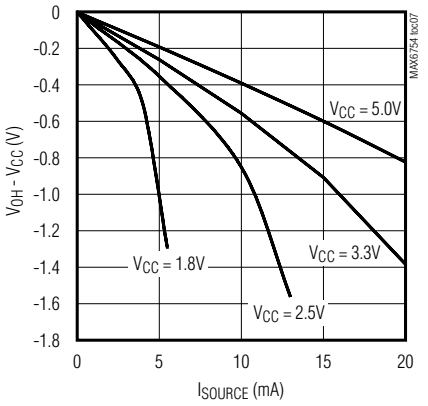

Pin Description

PIN				NAME	FUNCTION
MAX6754/ MAX6755/ MAX6756	MAX6757/ MAX6758/ MAX6759	MAX6760/ MAX6761/ MAX6762	MAX6763/ MAX6764		
1	1	1	–	V_{CC}	Power Voltage Input. V_{CC} powers the device. V_{CC} is the monitored voltage.
—	—	—	1		Power Input. V_{CC} powers the device.
2	2	2	2	GND	Ground
3	3	8	—	$\overline{MR}$	Active-Low Manual Reset Input. Drive $\overline{MR}$ low to assert undervoltage and reset outputs. The asserted output remains asserted for the specified propagation delay period after $\overline{MR}$ goes high. $\overline{MR}$ is internally pulled up to V_{CC} through a 26kΩ resistor.
4	—	—	—	RESET/ $\overline{RESET}$	Reset Output. The Reset Output asserts when V_{CC} is below the selected UV_{TH} threshold or above the selected OV_{TH} threshold. Reset output deasserts after the specified timeout period after V_{CC} rises above the UV_{TH} threshold or drops below the OV_{TH} threshold. MAX6754: Active-low push-pull output ($\overline{RESET}$). MAX6755: Active-high push-pull output (RESET). MAX6756: Active-low open-drain output ($\overline{RESET}$).
5	6	4	—	SET	Threshold Window Select Input. SET configures the undervoltage and overvoltage window range for the internal detectors. Connect SET to GND for ±5% window, or to V_{CC} for ±10% window. Bias SET to $V_{CC}/2$ for a ±15% window.
—	4	6	—	UV/ $\overline{UV}$	Undervoltage Output. UV/$\overline{UV}$ asserts when the monitored supply/supplies are below the UV_{TH} thresholds or $\overline{MR}$ is low. UV/$\overline{UV}$ deasserts after the specified timeout period when the monitored supply/supplies rise above the UV_{TH} thresholds or for the specified propagation delay after $\overline{MR}$ goes high. MAX6757/MAX6760: Active-low push-pull output ($\overline{UV}$). MAX6758/MAX6761: Active-high push-pull output (UV). MAX6759/MAX6762: Active-low open-drain output ($\overline{UV}$).
—	—	3	—	V_{CC2}	V_{CC2} Voltage Input. Input for the second window voltage monitor, and device output power supply when $V_{CC2} > V_{CC}$.
	5	5	5	$\overline{OV}$	Active-Low Overvoltage Output. $\overline{OV}$ asserts low when the monitored supply/supplies are above their overvoltage threshold (OV_{TH}). $\overline{OV}$ goes high impedance immediately when the monitored supply/supplies drop below OV_{TH}. There is no timeout delay period for the $\overline{OV}$ output. For MAX6763/MAX6764, $\overline{OV}$ is low when OVIN is above the internal 0.5V threshold. $\overline{OV}$ is high when OVIN is below the internal 0.5V threshold. MAX6757–MAX6762: Active-low open-drain output. MAX6763: Active-low push-pull output. MAX6764: Active-low open-drain output.

Low-Power, Single/Dual-Voltage Window Detectors

Pin Description (continued)

PIN				NAME	FUNCTION
MAX6754/ MAX6755/ MAX6756	MAX6757/ MAX6758/ MAX6759	MAX6760/ MAX6761/ MAX6762	MAX6763/ MAX6764		
		7	—	OVLATCH	Overvoltage Output Latch Control Input. Drive OVLATCH high to latch the overvoltage output for any V_{CC} or V_{CC2} overvoltage condition. Drive OVLATCH low to clear the latch after overvoltage conditions have been removed. The latch is transparent when OVLATCH is connected to GND. OVLATCH is a high-impedance input. Use external pullup or pulldown.
—	—	—	3	UVIN	Undervoltage Input. $\overline{UV}$ is low when UVIN is below the internal 0.5V threshold. $\overline{UV}$ is high when UVIN is above the internal 0.5V threshold.
—	—	—	4	$\overline{UV}$	Undervoltage Output. $\overline{UV}$ is low when UVIN is below the internal 0.5V threshold. $\overline{UV}$ is high when UVIN is above the internal 0.5V threshold. There is no timeout delay period for the $\overline{UV}$ output.
—	—	—	6	OVIN	Overvoltage Input. $\overline{OV}$ is low when OVIN is above the internal 0.5V threshold. $\overline{OV}$ is high when OVIN is below the internal 0.5V threshold.
—	—	—	—	EP	Exposed Pad (TDFN Only). EP is internally connected to GND. Leave EP unconnected or connect to GND.

Functional Diagrams

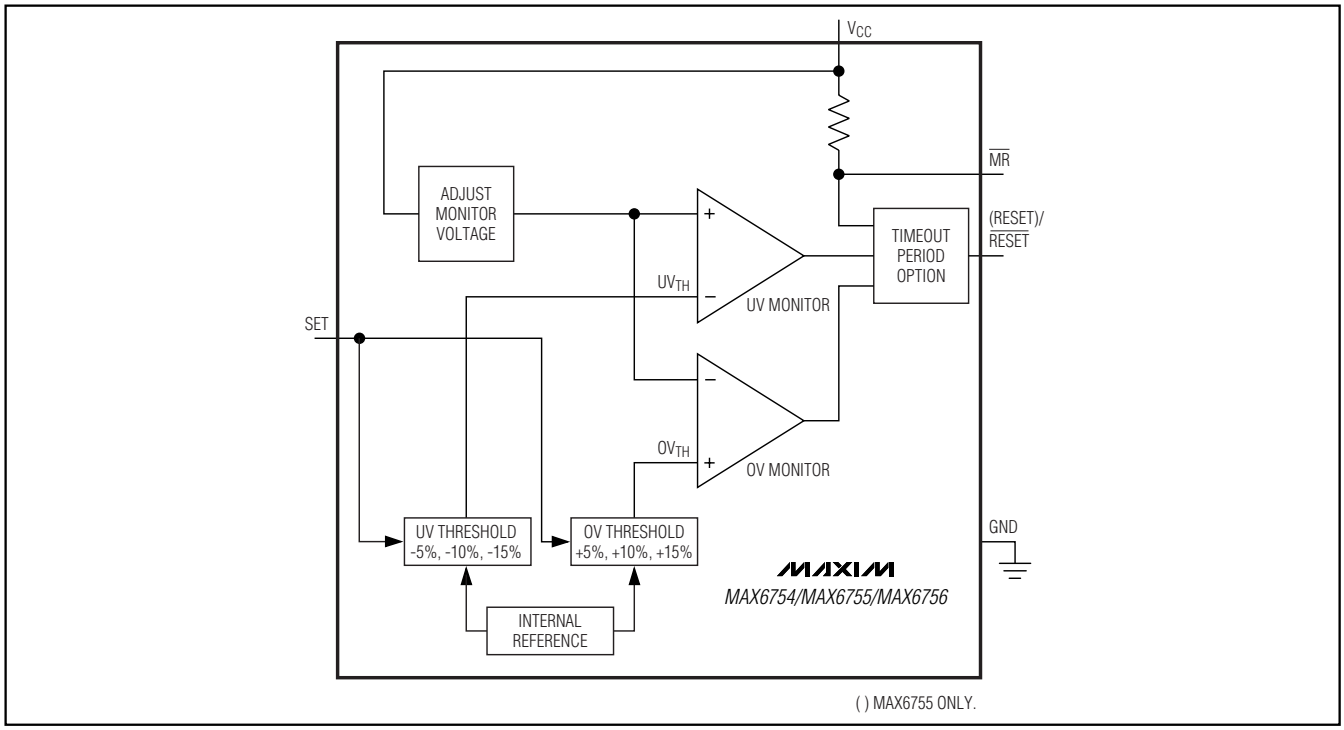

Figure 1. MAX6754/MAX6755/MAX6756 Functional Diagram

Functional Diagrams (continued)

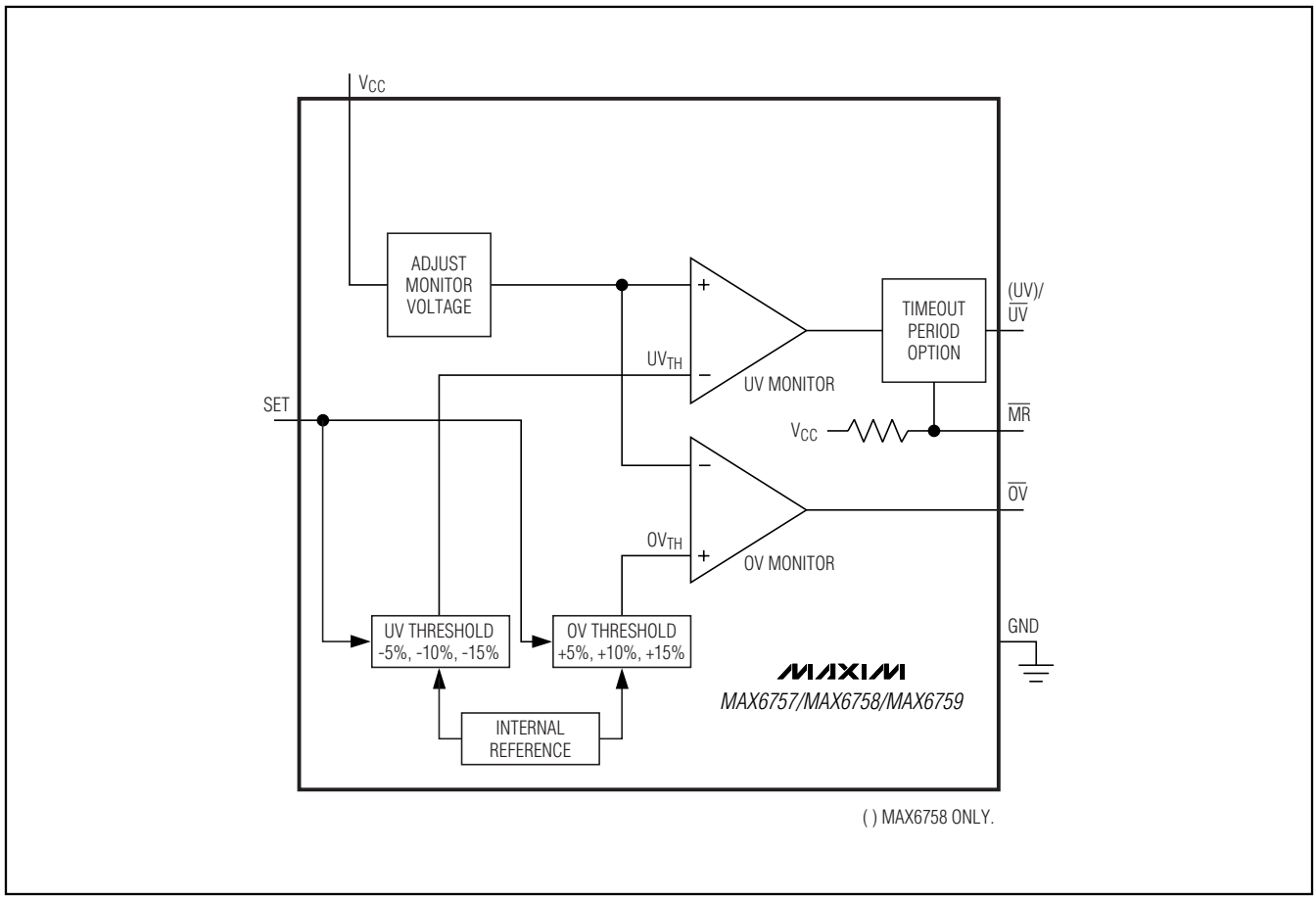

Figure 2. MAX6757/MAX6758/MAX6759 Functional Diagram

Low-Power, Single/Dual-Voltage Window Detectors

Functional Diagrams (continued)

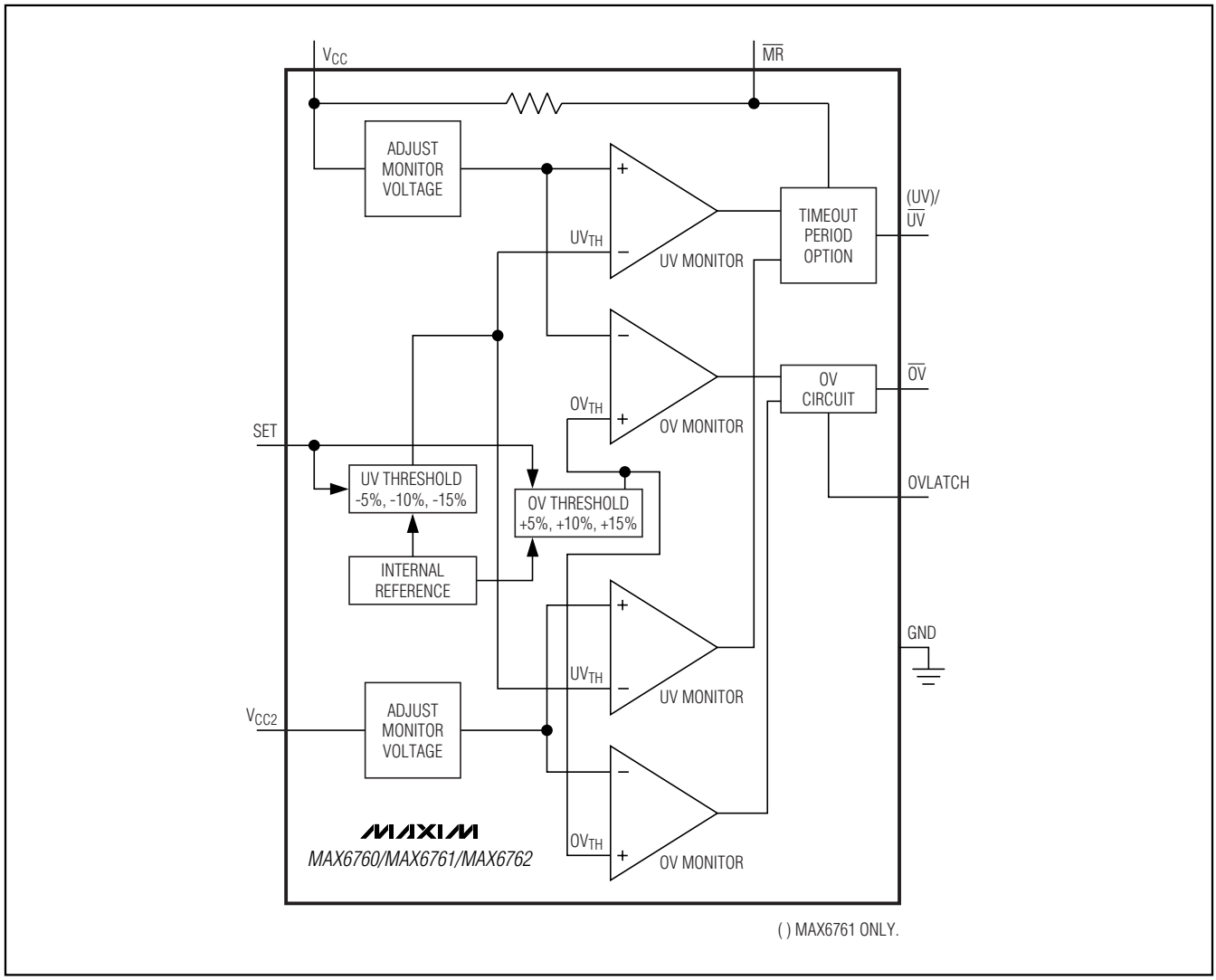

Figure 3. MAX6760/MAX6761/MAX6762 Functional Diagram

Functional Diagrams (continued)

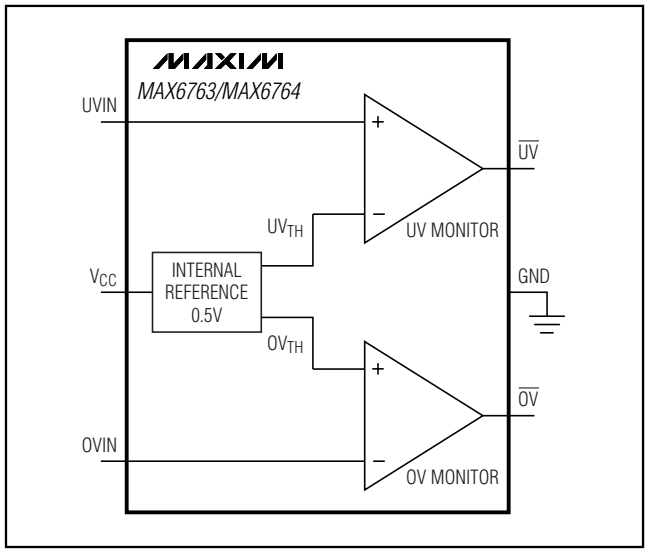

Figure 4. MAX6763/MAX6764 Functional Diagram

Detailed Description

The MAX6754–MAX6764 are low-power window voltage detectors capable of monitoring undervoltage and overvoltage conditions on system power supplies. Whenever a monitored voltage falls below its undervoltage threshold or exceeds its overvoltage threshold, these devices assert their outputs to notify the system (see the *Functional Diagrams*).

The MAX6754/MAX6755/MAX6756 are single-voltage window detectors with internally fixed nominal voltage, externally adjustable set window, single reset under/overvoltage output, and a manual reset input.

The MAX6757/MAX6758/MAX6759 are single-voltage window detectors with internally set nominal voltage, externally adjustable set window, separate under/overvoltage outputs, and manual reset input.

The MAX6760/MAX6761/MAX6762 are dual-voltage window detectors with internally/externally set nominal voltages, externally adjustable set window, separate under/overvoltage outputs, manual reset input, and overvoltage latch functions.

The MAX6763/MAX6764 are single adjustable window detectors with separate under/overvoltage outputs.

The MAX6754–MAX6762 offer factory-fixed voltage thresholds for monitoring system voltages from 0.9V to 5V. The MAX6754–MAX6762 include a SET function to select the window voltage to ±5%, ±10%, or ±15%. The MAX6763/MAX6764 allow for externally adjustable upper and lower voltage thresholds to be set externally (down to 0.5V). The MAX6754–MAX6762 are available with two timing options (20µs propagation delay or 100ms minimum reset timeout).

Supply Voltages

V_{CC} is the power-supply input and the monitored voltage of the MAX6754–MAX6762. These devices feature a factory-trimmed V_{CC} and V_{CC2} divider that sets the nominal input range (see Tables 1 and 2). V_{CC} for the MAX6763/MAX6764 is the power supply of the device and not the monitored voltage. For noisy systems, bypass V_{CC} and V_{CC2} each with a 0.1µF capacitor to GND.

Setting the Adjustable Nominal Voltage Threshold

The MAX6760/MAX6761/MAX6762 (versions with suffixes LA, TA, RA, ZA, WA, and AA) offer adjustable nominal voltage threshold to monitor V_{CC2}. Use an external voltage-divider to set the voltage at V_{CC2} to 0.4255V. Configure SET to select a monitor window of ±5%, ±10%, or ±15% (see Figure 5). The MAX6760/MAX6761/MAX6762 suffix AA monitor only V_{CC2} and do not monitor V_{CC}.

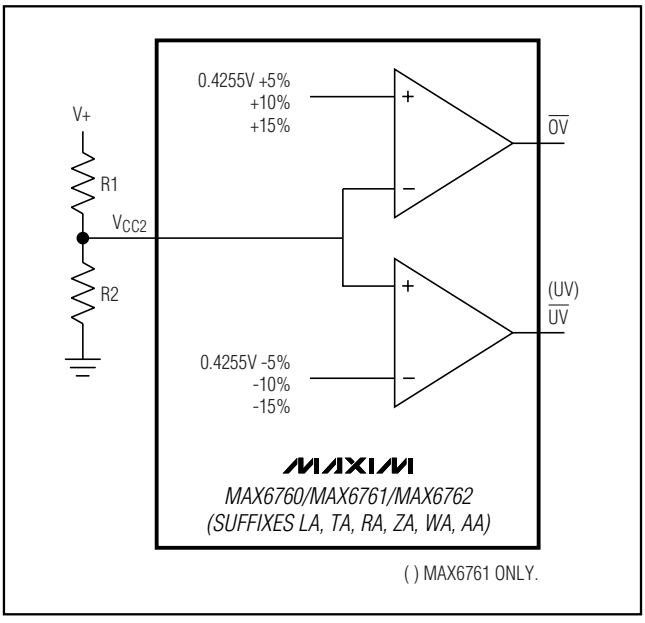

Figure 5. Setting the Threshold Voltage of V_{CC2}

Low-Power, Single/Dual-Voltage Window Detectors

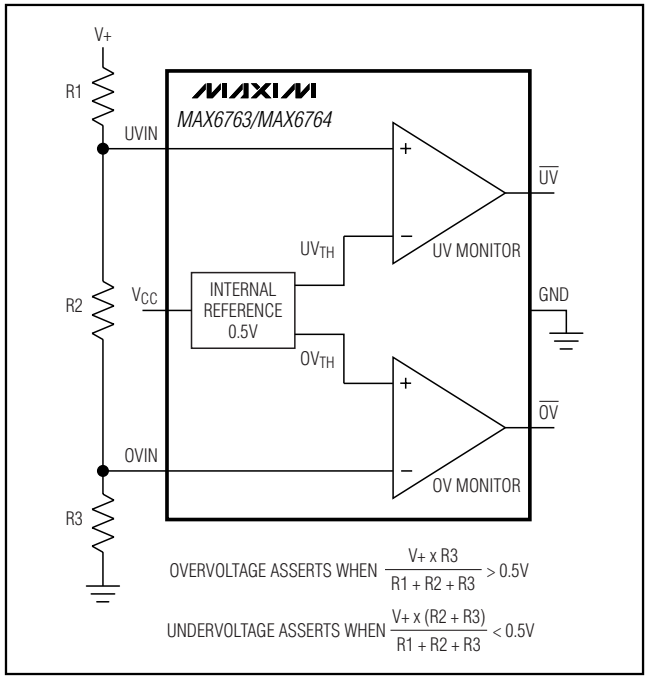

Figure 6. Setting the Under/Overvoltage Window

Choose R2 to have a resistance of up to 500kΩ. Calculate R1 by:

$$R1 = ((V_+ - 0.4255V) \times R2) / 0.4255V$$

The MAX6763/MAX6764 provide inputs to a window detector allowing the programming of the threshold voltage to within V_{CC} (see Figure 6).

Choose R1, R2, and R3 such that:

$$(V+ / (R1 + R2 + R3)) \geq 1\mu A$$

SET

The MAX6754–MAX6762 allow the setting of the window voltage range of the voltage detector. Connect SET to GND to set a ±5% window. Connect SET to V_{CC} for a ±10% window. Bias SET to V_{CC} / 2 for a ±15% window.

Manual Reset ($\overline{MR}$)

The MAX6754–MAX6762 include an active-low manual reset input. Drive $\overline{MR}$ low to assert a reset output (MAX6754/MAX6755/MAX6756) or an undervoltage output (MAX6757/MAX6758/MAX6759). The output remains asserted for the specified propagation delay time (see Figure 7) after $\overline{MR}$ goes high. $\overline{MR}$ is internally pulled to V_{CC} with a 26kΩ resistor.

Overvoltage Latch Control Input (OVLATCH)

The MAX6760/MAX6761/MAX6762 provide an overvoltage latch control input (OVLATCH). Drive OVLATCH high to latch the overvoltage output for any V_{CC} or V_{CC2} overvoltage condition. Drive OVLATCH low to clear the latch after overvoltage conditions have been removed. The latch is transparent when OVLATCH is connected to GND. OVLATCH is a high impedance input. Use external pullup or pulldown.

Reset, Undervoltage, and Overvoltage Outputs (RESET, $\overline{RESET}$, $\overline{UV}$, UV, $\overline{OV}$)

RESET, $\overline{RESET}$, $\overline{UV}$, UV, and $\overline{OV}$ outputs assert when the monitored supply is below the selected UV_{TH} threshold or above the selected OV_{TH} threshold. The reset output deasserts after the specified timeout period when the monitored supply rises above the UV_{TH} threshold or drops below the OV_{TH} threshold. The push-pull versions are referenced to V_{CC}.

The MAX6760/MAX6761/MAX6762 monitor both V_{CC} and V_{CC2}. An under/overvoltage condition on either voltage supply asserts the corresponding output. $\overline{RESET}$ and $\overline{UV}$ are guaranteed to be in the correct logic state when V_{CC} or V_{CC2} > 1V.

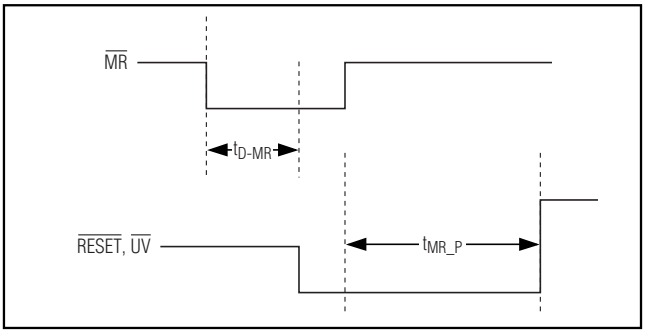

Figure 7a. Manual Reset/$\overline{Reset}$ Timing Diagram

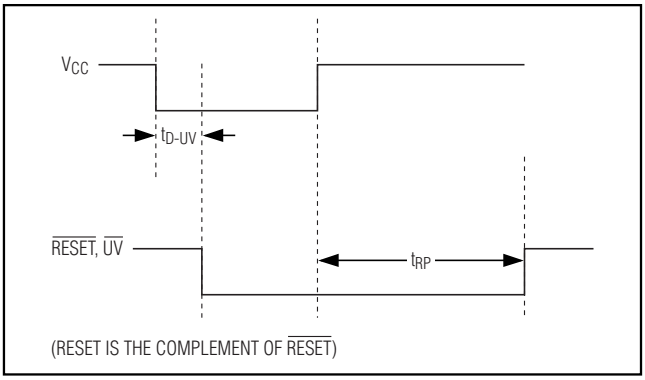

Figure 7b. V_{CC}/RESET, $\overline{UV}$ Timing Diagram

Applications Information

Microprocessor Monitoring

Figure 8 shows a microprocessor monitoring circuit. An overvoltage condition on either the core or I/O supply turns the SCR on, blowing the fuse to disconnect the circuit from the power source. An optional capacitor (C1) on the gate of the SCR provides additional transient immunity against nuisance trips.

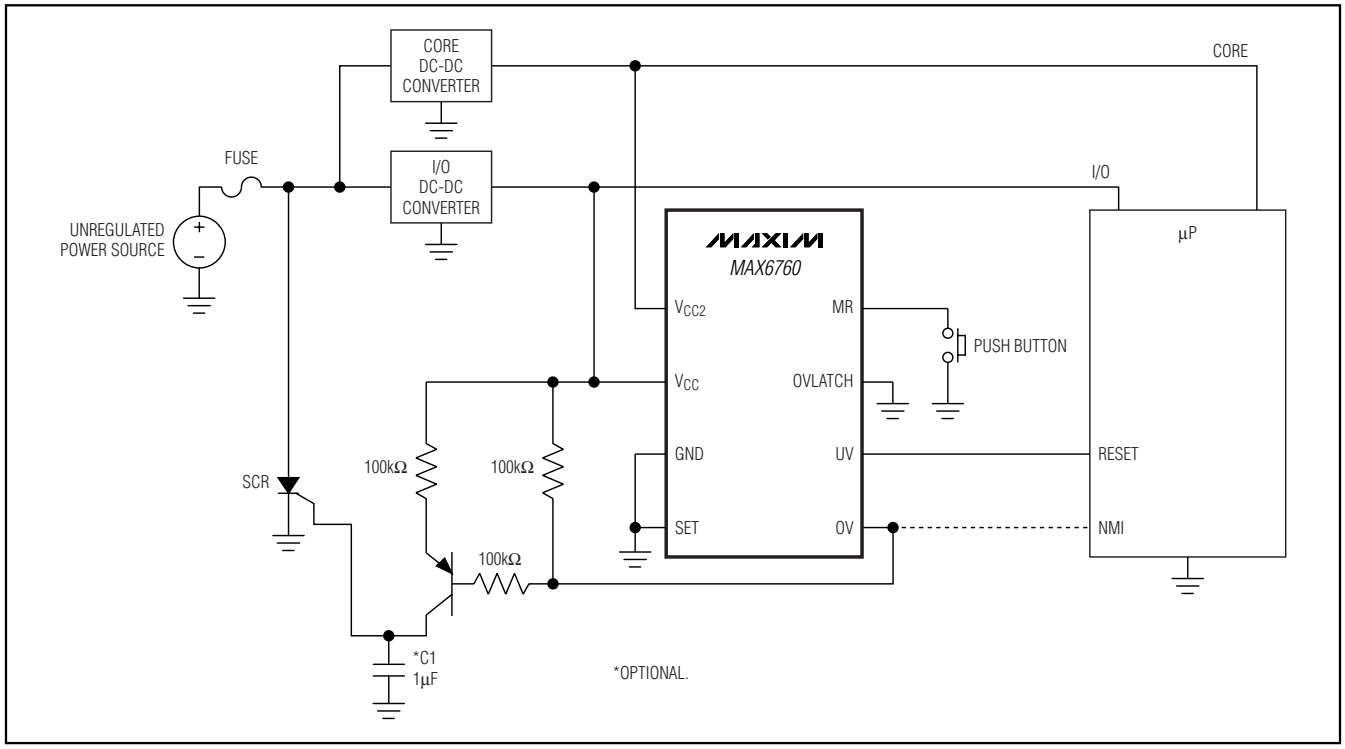

Figure 8. Microprocessor Monitoring

Selector Guide

	PUSH-PULL $\overline{\text{RESET}}$	PUSH-PULL RESET	OPEN-DRAIN $\overline{\text{RESET}}$	PUSH-PULL $\overline{\text{UV}}$	PUSH-PULL UV	OPEN-DRAIN $\overline{\text{UV}}$	PUSH-PULL $\overline{\text{OV}}$	OPEN-DRAIN $\overline{\text{OV}}$
MAX6754	X	—	—	—	—	—	—	—
MAX6755	—	X	—	—	—	—	—	—
MAX6756	—	—	X	—	—	—	—	
MAX6757	—	—	—	X	—	—	—	X
MAX6758	—	—	—	—	X	—	—	X
MAX6759	—	—	—	—	—	X	—	X
MAX6760	—	—	—	X	—	—	—	X
MAX6761	—	—	—	—	X	—	—	X
MAX6762	—	—	—	—	—	X	—	X
MAX6763	—	—	—	X	—	—	X	—
MAX6764	—	—	—	—	—	X	—	X

Low-Power, Single/Dual-Voltage Window Detectors

Table 1. Window Threshold Voltage Suffix Guide Single Fixed V_{CC} (MAX6754—MAX6759)

PART NO. SUFFIX	V_{CC} NOMINAL SYSTEM VOLTAGE (V)
L	5.0
T	3.3
R	3.0
Z	2.5
W	1.8

Table 2. Window Threshold Voltage Suffix Guide Dual Fixed/Adjustable (MAX6760/MAX6761/MAX6762)

PART NO. SUFFIX	V_{CC} NOMINAL SYSTEM VOLTAGE (V)	V_{CC2} NOMINAL SYSTEM VOLTAGE (V)
LT	5	3.3
LR	5	3.0
LA	5	ADJ*
TZ	3.3	2.5
TW	3.3	1.8
TI	3.3	1.5
TG	3.3	1.2
TE	3.3	0.9
TA	3.3	ADJ*
RZ	3.0	2.5
RW	3.0	1.8
RI	3.0	1.5
RG	3.0	1.2
RE	3.0	0.9
RA	3.0	ADJ*
ZW	2.5	1.8
ZI	2.5	1.5
ZG	2.5	1.2
ZE	2.5	0.9
ZA	2.5	ADJ*
WI	1.8	1.5
WG	1.8	1.2
WE	1.8	0.9
WA	1.8	ADJ*
AA	—	ADJ*

**See the Setting the Adjustable Nominal Voltage Threshold section.*

Table 3. Timeout Period Suffix Guide

TIMEOUT PERIOD SUFFIX	ACTIVE TIMEOUT PERIOD		
	MIN (ms)	TYP (MS)	MAX (ms)
D0	—	0.02	—
D3	100	185	320

Ordering Information (continued)

PART*	TEMP RANGE	PIN-PACKAGE
MAX6759UT_D_/V-T	-40°C to +125°C	6 SOT23-6
MAX6760TA_ _D_-T	-40°C to +125°C	8 TDFN-EP
MAX6761TA_ _D_-T	-40°C to +125°C	8 TDFN-EP
MAX6762TA_ _D_-T	-40°C to +125°C	8 TDFN-EP
MAX6763UT-T	-40°C to +125°C	6 SOT23-6
MAX6764UT-T	-40°C to +125°C	6 SOT23-6

**Insert the threshold level suffixes for V_{CC} and V_{CC2} (Tables 1 and 2) after UK, UT, or TA. For the MAX6754–MAX6759, insert only the V_{CC} threshold suffix after the UK or UT. Insert the reset timeout delay (Table 3) after D to complete the part number. For example, the MAX6760TALTD3-T provides a V_{CC} threshold of 5V, a V_{CC2} threshold of 3.3V, and a 100ms minimum reset timeout period. Sample stock is generally held on standard versions only (see the Standard Versions table). Standard versions have an order increment requirement of 2500 pieces. Nonstandard versions have an order increment requirement of 10,000 pieces. Contact factory for availability.*

Devices are available in both leaded and lead-free packaging. Specify lead-free by replacing "-T" with "+T" when ordering.

/V denotes an automotive qualified part.

Standard Versions Table

PART	TOP MARK
MAX6754UKLD0	AEOC
MAX6754UKLD3	AEJN
MAX6754UKTD0	AEOD
MAX6754UKTD3	AEJO
MAX6754UKZD0	AEJQ
MAX6754UKZD3	AEOF
MAX6754UKWD0	AEOG
MAX6754UKWD3	AEJR
MAX6755UKLD0	AEOH
MAX6755UKLD3	AEJS
MAX6755UKTD0	AEOI
MAX6755UKTD3	AEJT
MAX6755UKZD0	AEKV
MAX6755UKZD3	AEOK
MAX6755UKWD0	AEOL
MAX6755UKWD3	AEJW
MAX6756UKLD0	AEJX
MAX6756UKLD3	AEOM
MAX6756UKTD0	AEJY
MAX6756UKTD3	AEON
MAX6756UKZD0	AEOP
MAX6756UKZD3	AEKA
MAX6756UKWD0	AEKB
MAX6756UKWD3	AEOQ
MAX6757UTTD0	ABST
MAX6757UTTD3	ABRB
MAX6757UTLD0	ABSO
MAX6757UTLD3	ABRC
MAX6757UTZD0	ABRE
MAX6757UTZD3	ABSW
MAX6757UTWD0	ABSX
MAX6757UTWD3	ABRF

PART	TOP MARK
MAX6758UTLD0	ABSY
MAX6758UTLD3	ABRG
MAX6758UTTD0	ABSZ
MAX6758UTTD3	ABRH
MAX6758UTZD0	ABRJ
MAX6758UTZD3	ABTB
MAX6758UTWD0	ABTC
MAX6758UTWD3	ABRK
MAX6759UTLD0	ABRL
MAX6759UTLD3	ABTD
MAX6759UTTD0	ABRM
MAX6759UTTD3	ABTE
MAX6759UTZD0	ABTG
MAX6759UTZD3	ABRO
MAX6759UTWD0	ABRP
MAX6759UTWD3	ABTH
MAX6760TALTD3	AIO
MAX6760TALAD3	AHI
MAX6760TATZD3	AIR
MAX6760TATWD3	AHJ
MAX6760TATAD3	AIT
MAX6760TARAD3	AIV
MAX6760TAZWD3	AIX
MAX6760TAZAD3	AIZ
MAX6760TAWED3	AJB
MAX6760TAWAD3	AHL

Low-Power, Single/Dual-Voltage Window Detectors

Standard Versions Table (continued)

PART	TOP MARK
MAX6761TALTD3	AJD
MAX6761TALAD3	AHN
MAX6761TATZD3	AJG
MAX6761TATWD3	AHO
MAX6761TATAD3	AJI
MAX6761TARAD3	AJK
MAX6761TAZWD3	AJM
MAX6761TAZAD3	AJO
MAX6761TAWED3	AJQ
MAX6761TAWAD3	AHQ

PART	TOP MARK
MAX6762TALTD3	AJT
MAX6762TALAD3	AHR
MAX6762TATZD3	AJW
MAX6762TATWD3	AJY
MAX6762TATAD3	AKA
MAX6762TARAD3	AKB
MAX6762TAZWD3	AHT
MAX6762TAZAD3	AKE
MAX6762TAWED3	AKF
MAX6762TAWAD3	AKH
MAX6763UT	ABRQ
MAX6764UT	ABRR

Pin Configurations

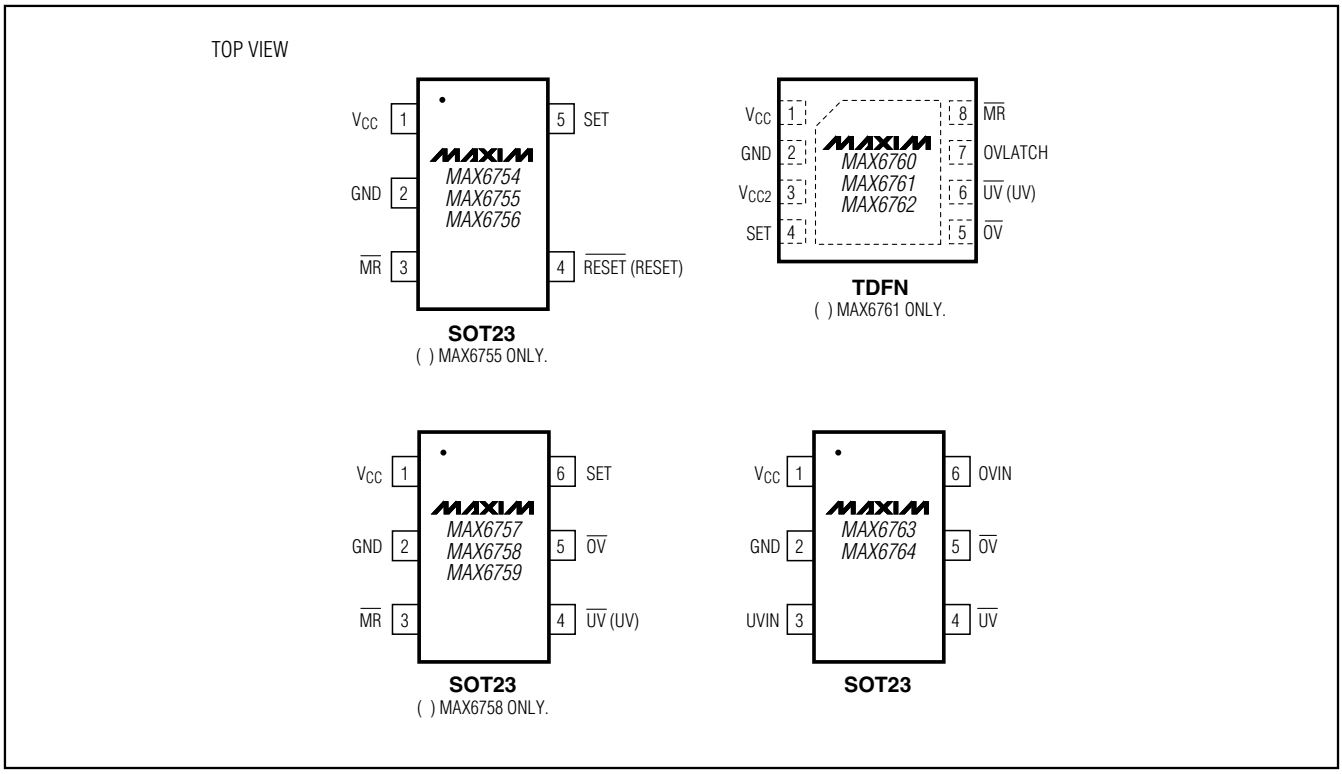

Chip Information

PROCESS: BiCMOS

Package Information

For the latest package outline information and land patterns (footprints), go to **www.maxim-ic.com/packages**. Note that a "+", "#", or "-" in the package code indicates RoHS status only. Package drawings may show a different suffix character, but the drawing pertains to the package regardless of RoHS status.

PACKAGE TYPE	PACKAGE CODE	OUTLINE NO.	LAND PATTERN NO.
5 SOT23	U5-1	21-0057	90-0174
6 SOT23	U6-1	21-0058	90-0175
8 TDFN	T833-2	21-0137	90-0059

Low-Power, Single/Dual-Voltage Window Detectors

Revision History

REVISION NUMBER	REVISION DATE	DESCRIPTION	PAGES CHANGED
4	1/11	Added /V to the MAX6759 *Ordering Information* and added soldering temperature in the *Absolute Maximum Rating* section	2, 16

Maxim cannot assume responsibility for use of any circuitry other than circuitry entirely embodied in a Maxim product. No circuit patent licenses are implied. Maxim reserves the right to change the circuitry and specifications without notice at any time.

© 2011 Maxim Integrated Products Maxim is a registered trademark of Maxim Integrated Products, Inc.