MAX6676/MAX6677

Low-Voltage, 1.8kHz PWM Output Temperature Sensors

General Description

The MAX6676/MAX6677 are high-accuracy, low-power temperature sensors with a single-wire output. The MAX6676/MAX6677 convert the ambient temperature into a ratiometric PWM output with temperature information contained in the duty cycle of the output square wave. The MAX6676 has an open-drain output and the MAX6677 has a push-pull output.

The MAX6676/MAX6677 are specified for operation with power-supply voltages from 1.8V to 3.6V, or from 3.6V to 5.5V (MAX6676 only). The typical unloaded supply current is 80µA. All devices feature a single-wire output that minimizes the number of pins necessary to interface with a microprocessor (µP). The output is a square wave with a nominal frequency of 1.8kHz (±20%) at +25°C. The output format is decoded as follows:

$$\text{Temperature (°C)} = 398.15\ 5\ (t_1/t_2) - 273.15$$

Where t1 is fixed with a typical value of 0.24ms and t2 is modulated by the temperature. The MAX6676/MAX6677 operate from -40°C to +125°C and are available in space-saving 6-pin SOT23 packages.

Applications

- Process Control
- Industrial
- HVAC and Environmental Control
- Portable Devices
- µP and µC Temperature Monitoring
- Isolated Temperature Sensing

Typical Operating Circuit

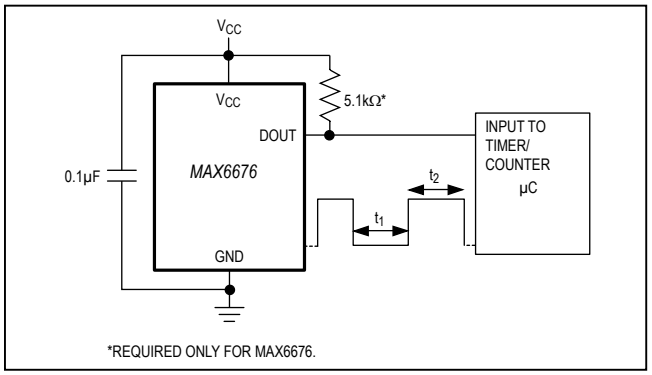

Features

- Simple Single-Wire, 1.8kHz PWM Output
- Operates Down to 1.8V
- High Accuracy
  ±1.5°C at T_A = +25°C
  ±3.0°C at T_A = 0°C to +85°C
- Operates from -40°C to +125°C
- Low 80µA Typical Current Consumption
- Small 6-Pin SOT23 Package

Ordering Information

PART	TEMP RANGE	PIN-PACKAGE
MAX6676AUT3-T	-40°C to +125°C	6 SOT23
MAX6676AUT5-T	-40°C to +125°C	6 SOT23
MAX6677AUT3-T	-40°C to +125°C	6 SOT23

Selector Guide

PART	OUTPUT TYPE	SUPPLY VOLTAGE RANGE (V)	TOP MARK
MAX6676AUT3	Open drain	1.8 to 3.6	ABBF
MAX6676AUT5	Open drain	3.6 to 5.5	ABBG
MAX6677AUT3	Push-pull	1.8 to 3.6	ABBH

Pin Configuration

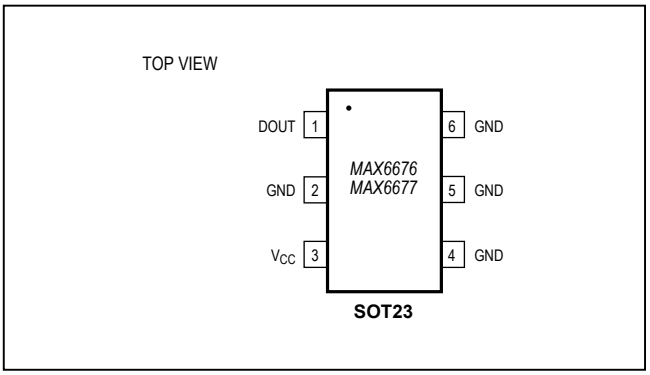

maxim integrated™

Absolute Maximum Ratings

(Voltages Referenced to GND)

V_{CC} ..... -0.3V to +6.0V
DOUT (MAX6676) ..... -0.3V to +6.0V
DOUT (MAX6677) ..... -0.3V to (V_{CC} + 0.3V)
DOUT Current ..... -1mA to +50mA
ESD Protection (DOUT, Human Body Model) ..... ±2000V

Continuous Power Dissipation (T_A = +70°C)
6-Pin SOT23 (derate 8.7mW/°C above +70°C) 695.7mW
Operating Temperature Range ..... -40°C to +125°C
Storage Temperature Range ..... -65°C to +150°C
Junction Temperature ..... +150°C
Lead Temperature (soldering, 10s) ..... +300°C

Stresses beyond those listed under "Absolute Maximum Ratings" may cause permanent damage to the device. These are stress ratings only, and functional operation of the device at these or any other conditions beyond those indicated in the operational sections of the specifications is not implied. Exposure to absolute maximum rating conditions for extended periods may affect device reliability.

Electrical Characteristics

(V_{CC} = 1.8V to 3.6V (MAX6676AUT3/MAX6677AUT3), V_{CC} = 3.6V to 5.5V (MAX6676AUT5), T_A = -40°C to +125°C, unless otherwise noted. Typical values are at V_{CC} = 3.0V (MAX6676AUT3/MAX6677AUT3), V_{CC} = 5.0V (MAX6676AUT5), T_A = +25°C.)

PARAMETER	SYMBOL	CONDITIONS	MIN	TYP	MAX	UNITS
Supply Voltage Range	V_{CC}	MAX6676AUT3/MAX6677AUT3	1.8		3.6	V
		MAX6676AUT5	3.6		5.5	
Supply Current	I_{CC}	R_L = ∞		80	200	µA
Temperature Error		T_A = +25°C	-1.5		+1.5	°C
		T_A = 0°C to +85°C	-3.0		+3.0	
		T_A = -20°C to +100°C	-4.2		+4.2	
		T_A = -40°C to +125°C	-5.5		+5.5	
Nominal t_1 Pulse Width				240		µs
Output High Voltage	V_{OH}	I_{OH} = 800µA, MAX6677	V_{CC} - 0.3			V
Output Leakage Current		V_{OUT} = V_{CC}		0.1		µA
Output Low Voltage	V_{OL}	I_{OL} = 3mA			0.3	V
Fall Time	t_F	C_L = 100pF, R_L = 10kΩ		20		ns
Rise Time	t_R	MAX6676, C_L = 15pF, R_L = 10kΩ		300		ns
		MAX6677, C_L = 100pF, R_L = 10kΩ		30		
Digital Output Capacitance	C_{OUT}			15		pF
Power-Supply Rejection Ratio	PSRR	V_{CC} = 1.8V - 3.6V	-1.2	+0.4	+1.2	°C/V

Note 1: Parts are tested at +25°C. Specifications are guaranteed by design over temperature.

Typical Operating Characteristics

(V_{CC} = 3.0V, T_A = +25°C, unless otherwise noted.)

OUTPUT FREQUENCY vs. TEMPERATURE

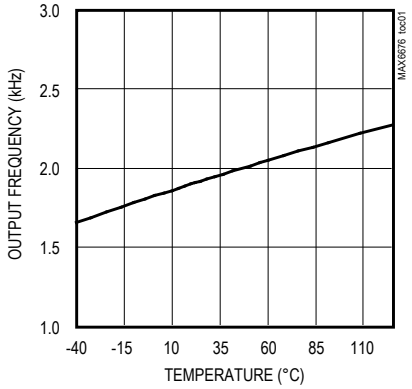

MAX6676AUT3 OUTPUT FREQUENCY vs. SUPPLY VOLTAGE

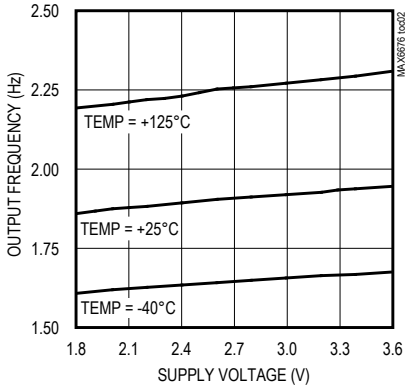

t_1 AND t_2 TIMES vs. TEMPERATURE

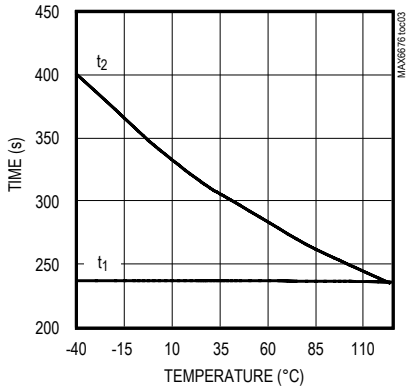

OUTPUT ACCURACY vs. TEMPERATURE

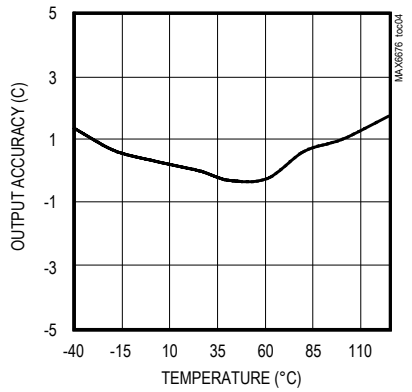

MAX6676AUT3 SUPPLY CURRENT vs. TEMPERATURE

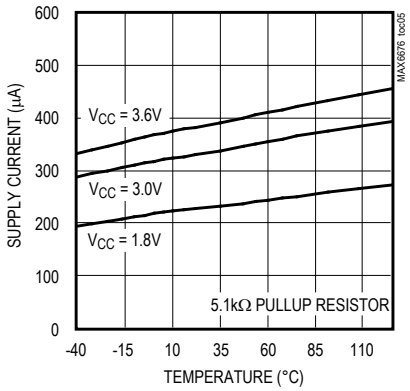

MAX6676AUT3 SUPPLY CURRENT vs. SUPPLY VOLTAGE

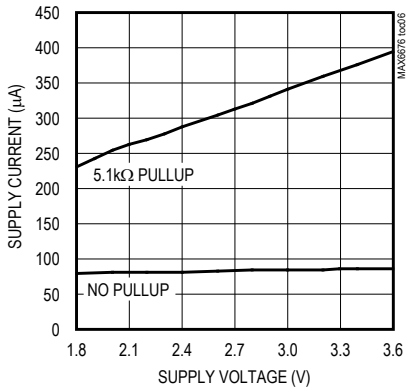

POWER-SUPPLY REJECTION RATIO vs. TEMPERATURE

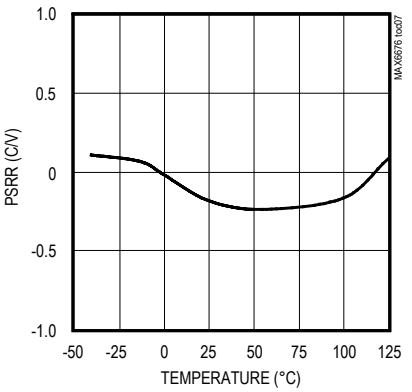

POWER-SUPPLY REJECTION RATIO vs. FREQUENCY

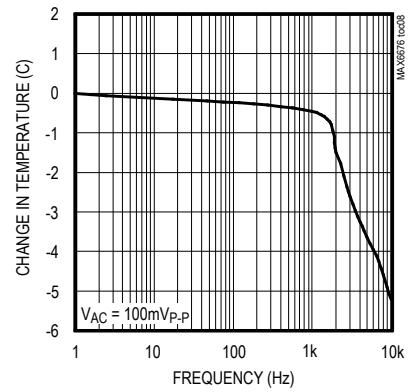

OUTPUT FALL TIME (C_L = 100pF, R_L = 100kΩ)

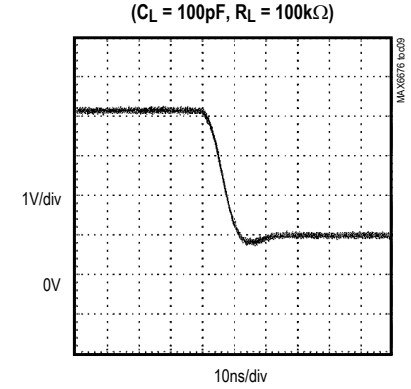

Typical Operating Characteristics (continued)

(V_{CC} = 3.0V, T_A = +25°C, unless otherwise noted.)

MAX6677 OUTPUT RISE TIME

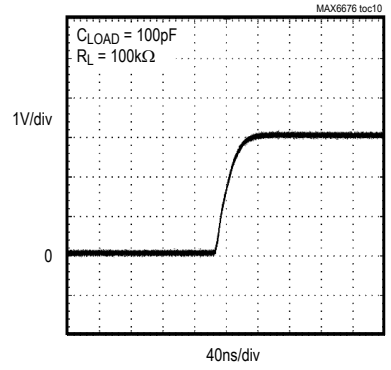

MAX6677 OUTPUT RISE AND FALL TIMES vs. CAPACITIVE LOAD

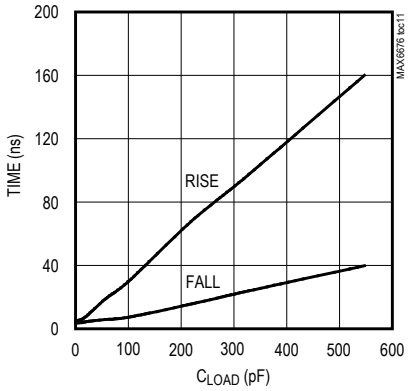

MAX6677 OUTPUT HIGH VOLTAGE vs. TEMPERATURE

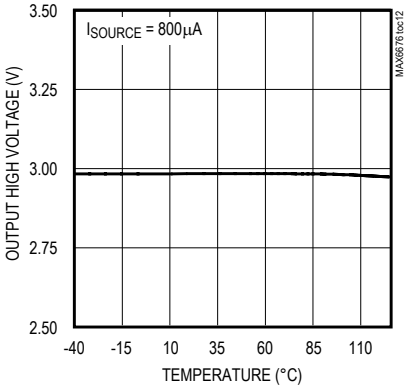

MAX6677 OUTPUT LOW VOLTAGE vs. TEMPERATURE

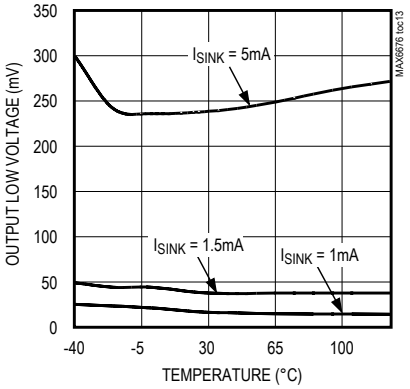

Pin Description

PIN	NAME	FUNCTION
1	DOUT	Digital Output Pin. The duty cycle of the output waveform is modulated by temperature
2, 4, 5, 6	GND	Ground. All four ground pins must be connected to GND
3	V_{CC}	Supply Voltage. Bypass V_{CC} to GND with a 0.1µF capacitor.

Detailed Description

The MAX6676/MAX6677 are high-accuracy, low-current (80µA, typ) temperature sensors ideal for interfacing with µCs or µPs. The MAX6676/MAX6677 convert the ambient temperature into a ratiometric PWM output at a nominal frequency of 1.8kHz (±20%) at +25°C.

The time periods, t1 (low) and t2 (high) (Figure 1), are easily read by a µP's timer/counter port. To calculate the temperature, use the following expression:

$$\text{Temperature (°C)} = 398.15 \times (t_1 / t_2) - 273.15$$

The µC or µP measures the output of the MAX6676/MAX6677 by counting t_1 and t_2 and computing the temperature based on their ratio. The resolution of the count is a function of the processor clock frequency and the resolution of the counter. Always use the same clock for t_1 and t_2 counters so that the temperature is strictly based on a ratio of the two times, thus eliminating errors due to different clocks' frequencies.

The MAX6677 (Figure 2a) has a push-pull output with full CMOS output swings. The ability to source and sink current allows the MAX6677 to drive capacitive loads up to 100pF with less than 1°C error.

The MAX6676 (Figure 2b) has an open-drain output. The output capacitance should be minimized in MAX6676 applications because the sourcing current is set by the pullup resistor. If the output capacitance becomes too large, lengthy rise and fall times distort the pulse width, resulting in inaccurate measurements.

Applications Information

Accurate temperature monitoring requires a good thermal contact between the MAX6676/MAX6677 and the object being monitored. A precise temperature measurement depends on the thermal resistance between the object being monitored and the MAX6676/MAX6677 die. Heat flows in and out of plastic packages primarily through the leads. If the sensor is intended to measure the temperature of a heat-generating component on the circuit board, mount the device as close as possible to that component and share the ground traces (if they are not too noisy) with the component. This maximizes the heat transfer from the component to the sensor.

Power Supply from µP Port Pin

The low quiescent current of the MAX6676/MAX6677 enables them to be powered from a logic line, which meets the requirements for supply voltage range. This provides a simple shutdown function to totally eliminate quiescent current by taking the logic line low. The logic line must be able to withstand the 0.1µ power-supply bypass capacitance.

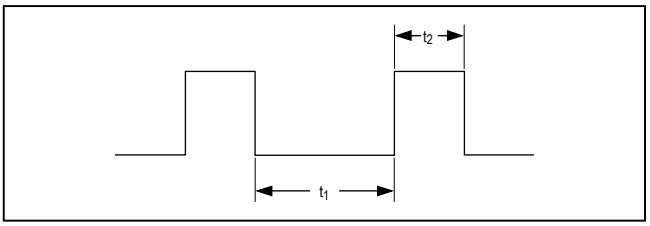

Figure 1. MAX6676/MAX6677 PWM Output

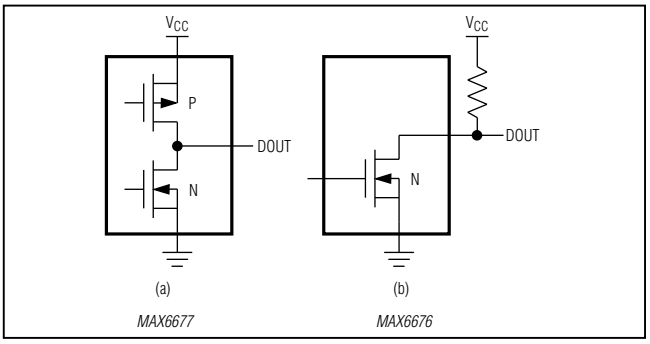

Figure 2. Output Configurations

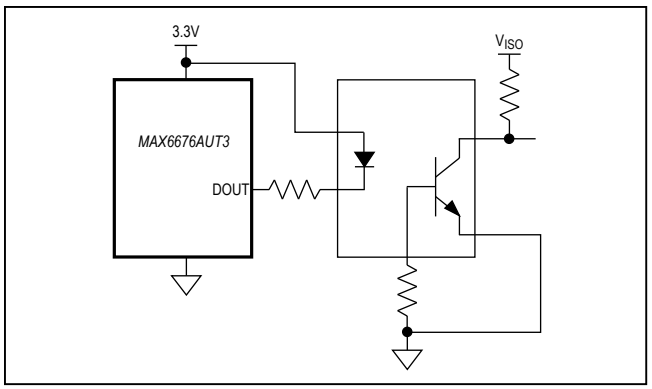

Figure 3. Galvanic Isolation Using an Optocoupler

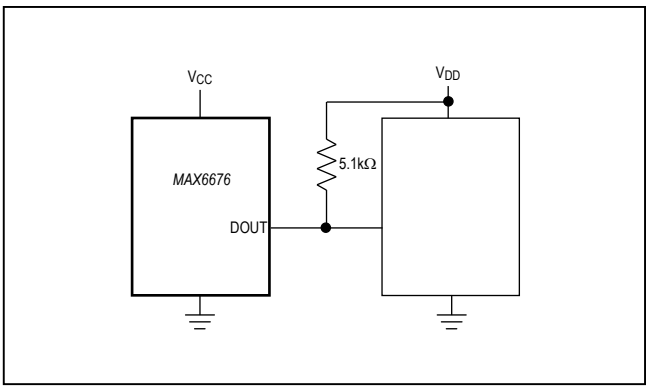

Figure 4. Low-Voltage Logic

Galvanic Isolation

Use an optocoupler to isolate the MAX6676/MAX6677 whenever a high common-mode voltage is present. Choose an optocoupler with equal turn-on and turn-off times. Unequal turn-on/turn-off times produce an error in the temperature reading (Figure 3)

Thermal Considerations

Self-heating may cause the temperature measurement accuracy of the MAX6676/MAX6677 to degrade in some applications. The quiescent dissipation and the power dissipated by the digital output may cause errors in obtaining the accurate temperature measurement. The temperature errors depend on the thermal conductivity of the package (SOT23, +140°C/W), the mounting technique, and the airflow. Static dissipation is typically 4.0µW operating at 5V with no load. For example, an out load of 3mA creates a maximum error of less than 0.1°C.

Multiple Logic Voltages

Use the MAX6676 open-drain output to drive devices operating at supply voltages other than the MAX6676's V_{CC}. As shown in Figure 4, connect a pullup resistor from the other supply voltage to the MAX6676 output. Limit the resistor's current to less than 1mA, thus maintaining an output low logic level of less than 200mV.

Chip Information

TRANSISTOR COUNT: 2096
PROCESS: BiCMOS

Package Information

For the latest package outline information and land patterns (footprints), go to **www.maximintegrated.com/packages**. Note that a "+", "#", or "-" in the package code indicates RoHS status only. Package drawings may show a different suffix character, but the drawing pertains to the package regardless of RoHS status.

PACKAGE TYPE	PACKAGE CODE	DOCUMENT NO.	LAND PATTERN NO.
6 SOT23	U6-1	21-0058	90-0175

Revision History

REVISION NUMBER	REVISION DATE	DESCRIPTION	PAGES CHANGED
0	10/02	Initial release	—
1	1/03	Removed future product designation and revised *Typical Operating Characteristics*	1, 2, 3
2	4/15	Removed the automotive reference from data sheet	1

For pricing, delivery, and ordering information, please contact Maxim Direct at 1-888-629-4642, or visit Maxim Integrated's website at www.maximintegrated.com.

Maxim Integrated cannot assume responsibility for use of any circuitry other than circuitry entirely embodied in a Maxim Integrated product. No circuit patent licenses are implied. Maxim Integrated reserves the right to change the circuitry and specifications without notice at any time. The parametric values (min and max limits) shown in the Electrical Characteristics table are guaranteed. Other parametric values quoted in this data sheet are provided for guidance.

Maxim Integrated and the Maxim Integrated logo are trademarks of Maxim Integrated Products, Inc. © 2015 Maxim Integrated Products, Inc.