19-3426; Rev 0; 10/04

EVALUATION KIT AVAILABLE

Dual FireWire Current Limiter and Low-Drop ORing Switch Controller

MAX5944

General Description

The MAX5944 is a dual, current limiter/low-drop ORing, switch controller power-management IC for FireWire® applications. Each independent channel controls two external power MOSFETs to regulate current from the input power supply to the load and performs low-voltage-drop power-supply ORing. The MAX5944 operates over the 7.5V to 37V input range and provides inrush and output current limit in addition to diode ORing functions suitable for FireWire applications.

The MAX5944 allows the safe insertion and removal of FireWire peripherals into a live FireWire port by providing inrush current control and output current-limiting functions. The MAX5944 features a current-limit function that actively limits the current drawn by the load with a 2ms timeout. Its autoretry function then automatically restarts after the 259ms autoretry delay time.

The ORing feature provides a very efficient way to protect the FireWire port when connected to another FireWire peripheral that sources a higher voltage. By turning off the external MOSFETS, the MAX5944 provides a true bidirectional load disconnect. Each channel has an independent ON/OFF control that results in less than 10µA supply current per channel.

The MAX5944 operates over the -40°C to +85°C extended temperature range and is available in a 16-pin SO package.

Features

- **Provides Safe Hot-Swap for 7.5V to 37V Power Supplies**
- **Dual-Channel Hot-Swap**
- **Low-Drop Power ORing with Ultra-Fast Turn-Off**
- **Active Current Limit**
- **±5% Current-Limit Sensing Accuracy**
- **2ms Current-Limit Timeout**
- **Fast Current-Limit Response to Output Short-Circuit Conditions**
- **Drives External n-Channel Power MOSFETs**
- **Independent Overcurrent Fault Status Outputs**
- **259ms Autoretry Period**
- **10µA (Per Channel) Shutdown Current**
- **Independent ON/OFF Control Allows Undervoltage Lockout Programming**
- **Fast Load Disconnect Control Through ON/OFF Inputs**
- **Bidirectional Load Disconnect**
- **Power Routing from One Port to Another**

Applications

FireWire Desktop/Notebook Port

FireWire Peripheral Device Current Limit

FireWire Hub

Hot Swap

Typical Operating Circuit appears at end of data sheet.

FireWire is a registered trademark of Apple Computer, Inc.

Ordering Information

PART	TEMP RANGE	PIN-PACKAGE
MAX5944ESE	-40°C to +85°C	16 SO

Pin Configuration

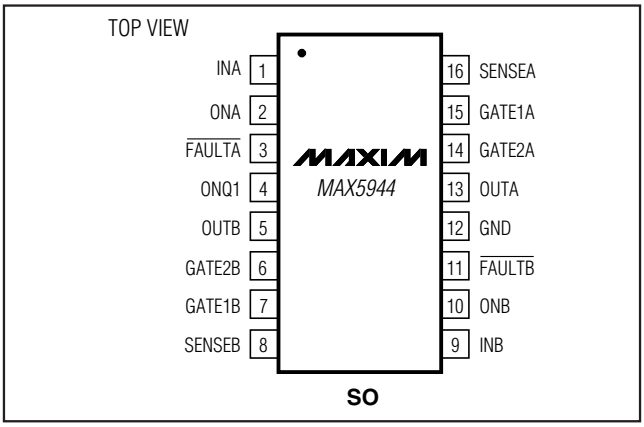

For pricing, delivery, and ordering information, please contact Maxim/Dallas Direct! at 1-888-629-4642, or visit Maxim's website at www.maxim-ic.com.

Dual FireWire Current Limiter and Low-Drop ORing Switch Controller

ABSOLUTE MAXIMUM RATINGS

(Voltages referenced to GND, unless otherwise noted.)
IN_ .....-0.3V to +80V
OUT_ .....-0.3V to +80V
SENSE_ to IN_ .....-1V to +0.3V
GATE1_ to SENSE_ .....-0.3V to +8V
GATE2_ to OUT_ .....-0.3V to +8V
FAULT_.....-0.3V to +85V
ON_ONQ1 .....-0.3V to +85V

Continuous Power Dissipation (T_A = +70°C)
16-Pin SO (derate 9.1mW/°C above +70°C).....728mW
Operating Temperature Range .....-40°C to +85°C
Maximum Junction Temperature .....+150°C
Storage Temperature Range .....-60°C to +150°C
ESD Rating (Human Body Model).....2000V
Lead Temperature (soldering, 10s) .....+300°C

Stresses beyond those listed under "Absolute Maximum Ratings" may cause permanent damage to the device. These are stress ratings only, and functional operation of the device at these or any other conditions beyond those indicated in the operational sections of the specifications is not implied. Exposure to absolute maximum rating conditions for extended periods may affect device reliability.

ELECTRICAL CHARACTERISTICS

(V_{IN} = 7.5V to 37V, GND = 0V, and T_A = -40°C to +85°C, unless otherwise noted. Typical values are at $V_{IN_}$ = 12V, T_A = +25°C.) (Note 1)

PARAMETER	SYMBOL	CONDITIONS		MIN	TYP	MAX	UNITS
SUPPLIES							
Supply Voltage Range	$V_{IN_}$			7.5		37	V
Supply Current	I_{IN}	$V_{ON_}$ = 3V, no load, per channel			1.3	2.3	mA
Shutdown Current	I_{SD}	$V_{ON_}$ = 0.4V, per channel			5	10	µA
IN_ Default Undervoltage Lockout	V_{UVLO}	$V_{IN_}$ rising, ON_ = IN_		6.2	6.5	6.8	V
IN_ Default Undervoltage-Lockout Hysteresis					0.35		V
ON_ Undervoltage-Lockout Threshold	V_{ON_REF}	$V_{ON_}$ rising		1.20	1.24	1.275	V
ON_ Undervoltage-Lockout-Threshold Hysteresis					70		mV
ON_ Input Bias Current	I_{ON}					1	µA
GATE2_ (Current-Limit Control)							
GATE2_ Pullup Current (Note 2)	I_{G2U}			36	45	54	µA
GATE2_ High Voltage	V_{G2}	$V_{GATE2_}$ - $V_{OUT_}$	7.5V ≤ V_{IN} ≤ 8V	4.25	5.5	6.50	V
			8V ≤ V_{IN} ≤ 37V	4.5	5.5	6.5	
Current-Limit Threshold Voltage	V_{TH}	$V_{IN_}$ - $V_{SENSE_}$		47.5	50	52.5	mV
Fast Pulldown Current-Limit Threshold Voltage (Note 3)	V_{THF}	$V_{IN_}$ - $V_{SENSE_}$		70	75	80	mV
GATE2_ Pulldown Current	I_{G2D}	V_{TH} < ($V_{IN_}$ - $V_{SENSE_}$) < V_{THF}		335	435	535	µA
GATE2_ Fast Pulldown Current (Note 3)	I_{G2DF}	($V_{IN_}$ - $V_{SENSE_}$) > V_{THF}, $V_{GATE2_}$ = ($V_{OUT_}$ + 4.5V)		80	125	200	mA

ELECTRICAL CHARACTERISTICS (continued)

(V_{IN} = 7.5V to 37V, GND = 0V, and T_A = -40°C to +85°C, unless otherwise noted. Typical values are at $V_{IN_}$ = 12V, T_A = +25°C.) (Note 1)

PARAMETER	SYMBOL	CONDITIONS		MIN	TYP	MAX	UNITS
GATE2_ Peak Pulldown Current	I_{G2DP}	($V_{IN_}$ - $V_{SENSE_}$) = 1V			1.0		A
GATE2_ Pulldown Current During Any GATE2_ Turn-Off Condition (Note 4)	I_{G2OFF}	$V_{GATE2_}$ = ($V_{OUT_}$ + 4.5V)		80	125	200	mA
GATE1_ (ORing Control)							
ORing Switch Turn-On-Current Threshold Voltage	V_{OR}	($V_{IN_}$ - $V_{SENSE_}$) rising		3	5	7	mV
ORing Switch Turn-On-Current Threshold Voltage Hysteresis		($V_{IN_}$ - $V_{SENSE_}$) falling			0.5		mV
GATE1_ Pullup Current (Note 5)	I_{G1U}			36	45	54	µA
GATE1_ High Voltage	V_{G1}	$V_{GATE_}$ - $V_{SENSE_}$	7.5V ≤ V_{IN} ≤ 8V	4.25	5.5	6.50	V
			8V ≤ V_{IN} ≤ 37V	4.5	5.5	6.5	
GATE1_ Turn-Off Switch On-Resistance	R_{G1PD}	Measured between GATE1_ and SENSE_ when ($V_{IN_}$ - $V_{SENSE_}$) < V_{OR}			2	3	Ω
LOGIC INPUTS							
ONQ1 Input-Logic Low Voltage	V_{IL}	$V_{ON_}$ > V_{ON_REF}				0.7	V
ONQ1 Input-Logic High Voltage	V_{IH}	$V_{ON_}$ > V_{ON_REF}		1.8			V
ONQ1 Input Current	I_{IH}					1	µA
$\overline{FAULT_}$ Output Low Voltage	V_{OL}	Low-impedance state, $I_{\overline{FAULT_}}$ = 5mA			0.12	0.25	V
$\overline{FAULT_}$ Output High Leakage Current	I_{OH}	High-impedance state, $V_{\overline{FAULT_}}$ = 37V				1	µA
OUT_ Input Current	I_{OUT}	$V_{ON_}$ = GND				1	µA

Dual FireWire Current Limiter and Low-Drop ORing Switch Controller

ELECTRICAL CHARACTERISTICS (continued)

(V_{IN} = 7.5V to 37V, GND = 0V, and T_A = -40°C to +85°C, unless otherwise noted. Typical values are at $V_{IN_}$ = 12V, T_A = +25°C.) (Note 1)

PARAMETER	SYMBOL	CONDITIONS	MIN	TYP	MAX	UNITS
TIMING						
Current-Limit Timeout	t_{ILIM}	Current-limit mode	1.78	2.02	2.26	ms
Automatic Restart Delay After Current-Limit Timeout (Note 7)	t_{OFF}		240	259	278	ms
GATE1_ Turn-Off Time (ORing Response Time)	t_{OR}	From V_{OR} trigger until ($V_{GATE1_}$ - $V_{IN_}$) < 1V, $C_{GATE1_}$ = 10nF		100		ns
Turn-Off Response Time (Note 7)	t_{ON_OFF}	Time from $V_{ON_}$ < (V_{ON_OFF} - Hysteresis) until ($V_{GATE2_}$ - $V_{OUT_}$) < 1V, for $C_{GATE2_}$ = open		0.34	0.6	µs
Minimum Delay from ON_ Low to Low-Current Shutdown Mode	t_{SD}	ON_ step from 1.3V to 0.4V		50		µs

Note 1: All min/max parameters are tested at +25°C and +85°C. Limits at -40°C are guaranteed by design.
Note 2: Measured at both V_{GATE2} = V_{OUT} = 0V and V_{GATE2} = V_{OUT} = V_{IN}.
Note 3: The typical value of parameter V_{THF} is 1.5 x V_{TH}.
Note 4: Current-Limit Timeout. IN_ or ON_ low.
Note 5: See the *Typical Operating Circuit*. Measured at $V_{GATE_}$ = $V_{SENSE_}$.
Note 6: The tristate ("floating") logic condition will be entered if the pin current is within these limits.
Note 7: If the ON_ voltages go below V_{ON_REF} - Hysteresis, then GATE2_ goes low immediately to disconnect power from the load quickly (within t_{ON_OFF}).

Typical Operating Characteristics

($V_{IN_}$ = +12V, T_A = +25°C, unless otherwise noted.)

SUPPLY CURRENT vs. SUPPLY VOLTAGE

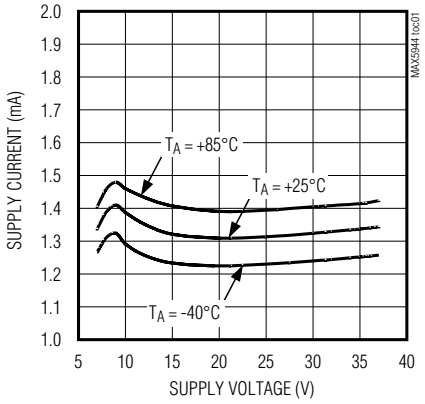

SHUTDOWN SUPPLY CURRENT vs. SUPPLY VOLTAGE

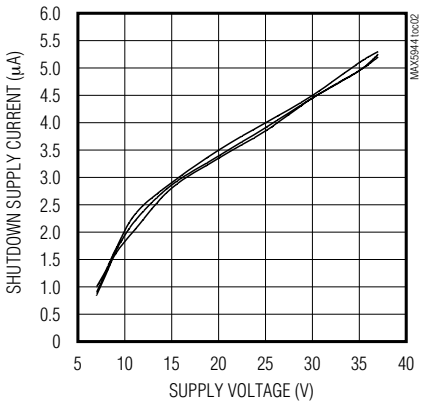

CURRENT-LIMIT/CIRCUIT-BREAKER THRESHOLD VOLTAGE vs. TEMPERATURE

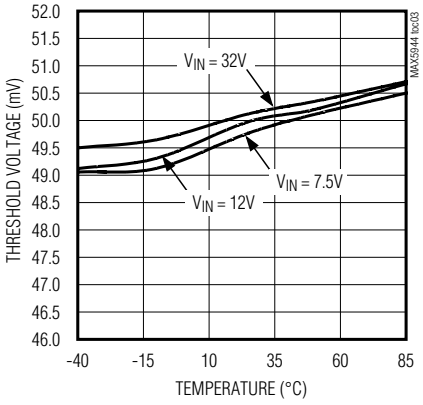

Typical Operating Characteristics (continued)

($V_{IN_}$ = +12V, T_A = +25°C, unless otherwise noted.)

CURRENT-LIMIT TIMEOUT vs. TEMPERATURE

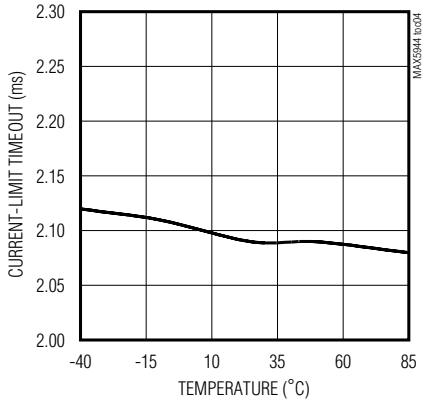

ORing THRESHOLD VOLTAGE vs. TEMPERATURE

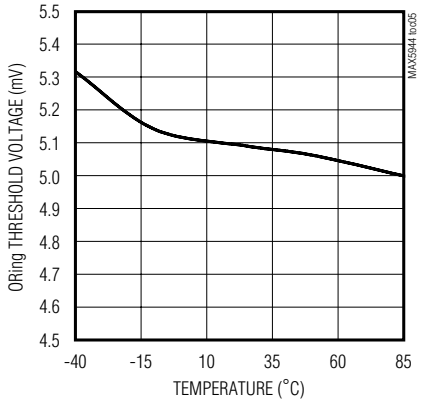

GATE CURRENTS vs. TEMPERATURE

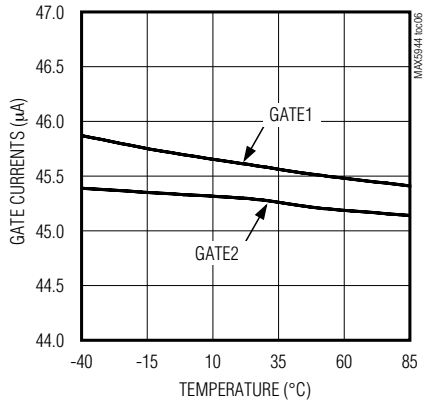

GATE1 DRIVE VOLTAGE vs. TEMPERATURE

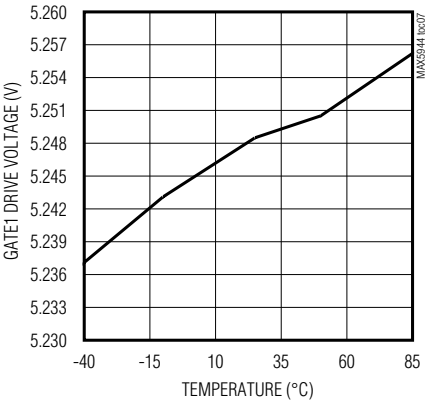

GATE2 DRIVE VOLTAGE vs. TEMPERATURE

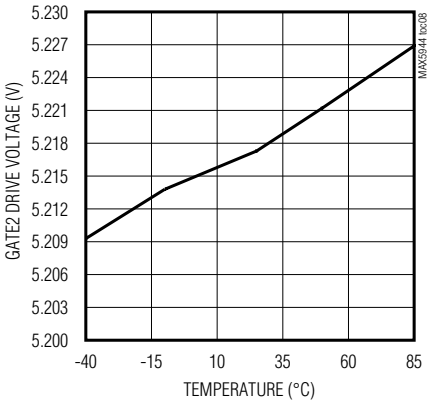

ON HIGH VOLTAGE vs. TEMPERATURE

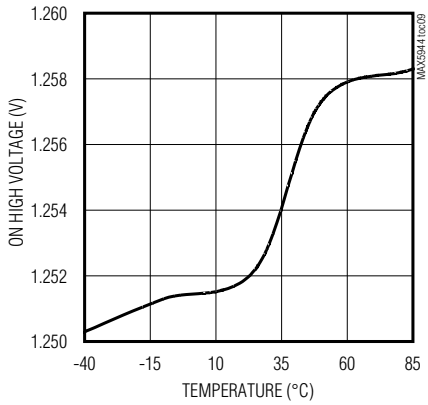

ON LOW VOLTAGE vs. TEMPERATURE

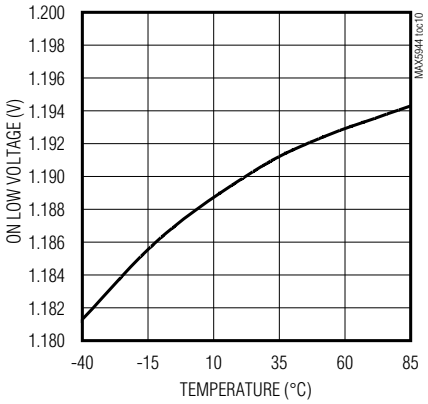

FAULT LOW VOLTAGE vs. TEMPERATURE

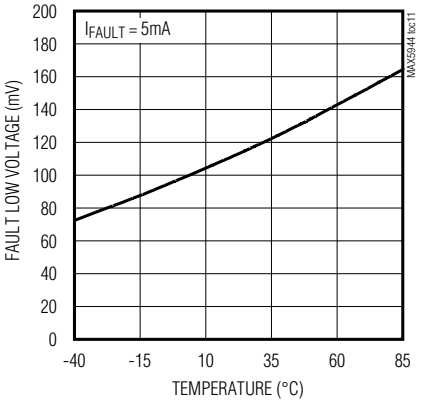

Dual FireWire Current Limiter and Low-Drop ORing Switch Controller

Typical Operating Characteristics (continued)

($V_{IN_}$ = +12V, T_A = +25°C, unless otherwise noted.)

ORing THRESHOLD RESPONSE TIME

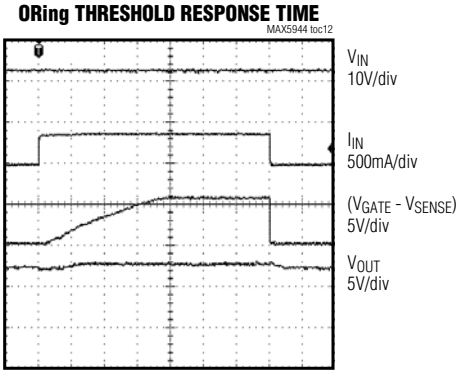

TURN-OFF RESPONSE TIME

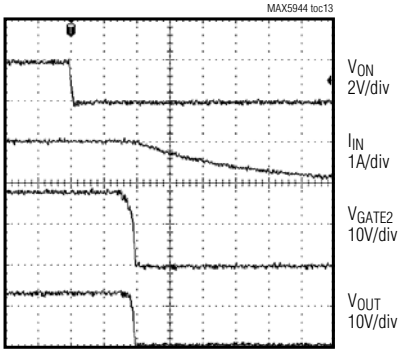

SHORT-CIRCUIT EVENT (V_{IN} = 37V)

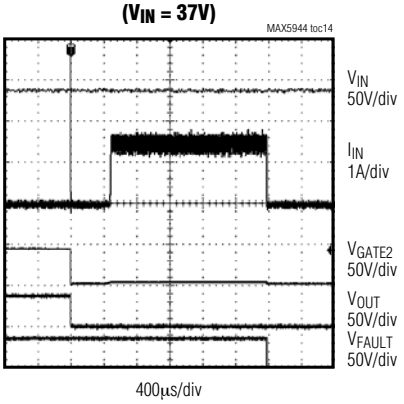

SHORT-CIRCUIT EVENT (V_{IN} = 37V)

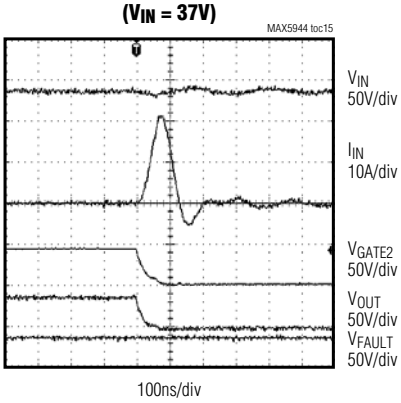

SHORT-CIRCUIT RESPONSE (V_{IN} = 8V)

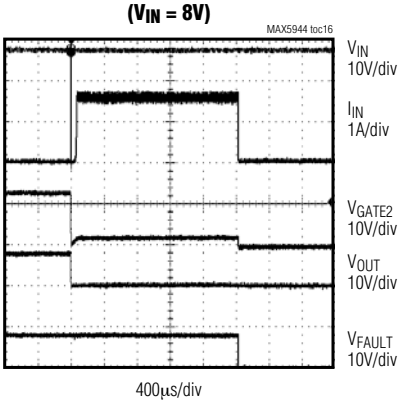

SHORT-CIRCUIT RESPONSE (V_{IN} = 8V)

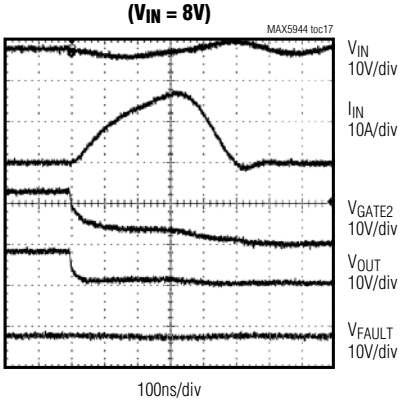

Typical Operating Characteristics (continued)

($V_{IN_}$ = +12V, T_A = +25°C, unless otherwise noted.)

ORing SWITCHOVER WAVEFORM

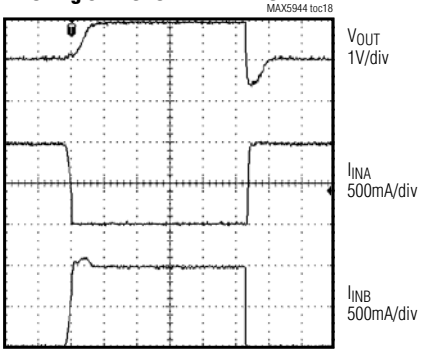

V_{INA} = 12V
V_{INB} = 12.8V
V_{ONA} RISING = 12V
C_{OUT} = 0

ORing SWITCHOVER WAVEFORM (V_{INB} RISING ABOVE V_{INA})

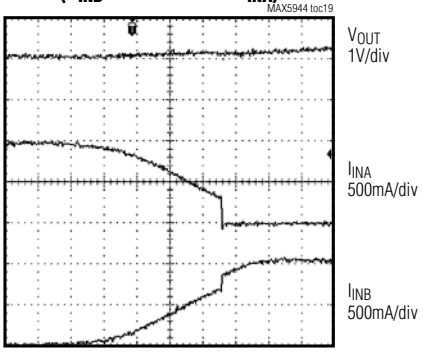

V_{INA} = 12V
V_{INB} = 13V
V_{ONB} RISING = 12V
C_{OUT} = 0

ORing SWITCHOVER WAVEFORM (V_{INB} FALLING BELOW V_{INA})

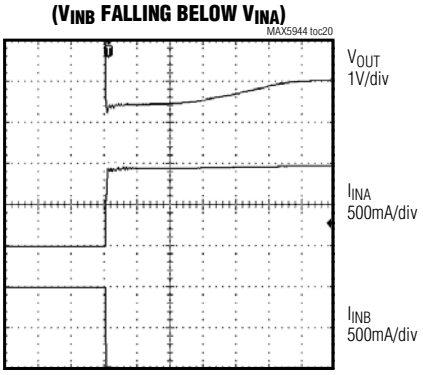

V_{INA} = 12V
V_{INB} = 13V
V_{ONB} FALLING = 12V
C_{OUT} = 0

HOT PLUG-IN LOAD CAPACITANCE INTO ACTIVE PORT (NO FAULT)

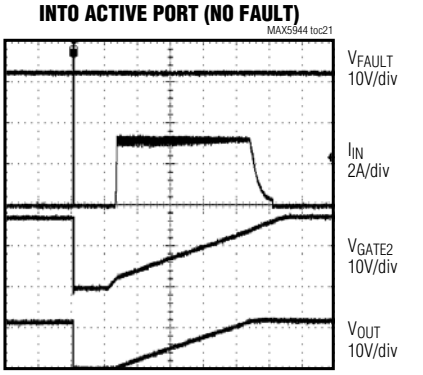

C_{LOAD} = 220µF

HOT PLUG-IN LOAD CAPACITANCE INTO ACTIVE PORT (CURRENT-LIMIT TIMEOUT)

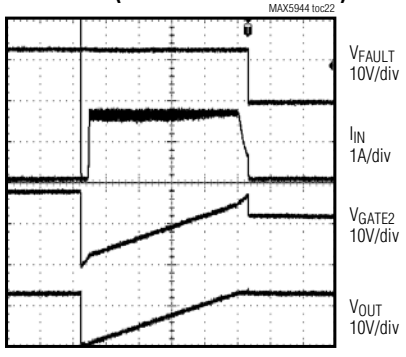

C_{LOAD} = 470µF

Dual FireWire Current Limiter and Low-Drop ORing Switch Controller

Pin Description

PIN	NAME	FUNCTION
1	INA	Channel A Input Power and Current-Sense Positive Input. Connect INA to the other end of the current-sense resistor and to the power source (see the *Typical Operating Circuit*).
2	ONA	Channel A On/Off Control Input. ONA sets the undervoltage lockout threshold and resets the part after a fault latch. Drive ONA high to enable the device. Drive ON_ low to disable the device. Connect ONA to INA for the default undervoltage lockout threshold. Connect a resistor-divider from INA to ONA and to GND to program the desired undervoltage lockout threshold.
3	$\overline{\text{FAULTA}}$	Channel A Current-Fault Status Output. $\overline{\text{FAULTA}}$ is an open-drain output. $\overline{\text{FAULTA}}$ goes low after a current-limit fault has exceeded the 2ms (typ) current-limit timeout period (see the *$\overline{\text{FAULT}}$_ section*).
4	ONQ1	ORing Switch Manual Turn-On Input. Drive ONQ1 low to enable power-supply ORing for channels A and B. Drive ONQ1 high to set GATE1A to GATE1B high to allow reverse-current flow. ONQ1 is disabled for the respective channel when V_{IN} is below the UVLO threshold, $V_{ON_}$ is below the undervoltage lockout threshold and after a current-limit fault.
5	OUTB	Channel B Output-Voltage Sense. Connect to the output.
6	GATE2B	Channel B Current-Limiter Switch Gate-Drive Output. Referenced to OUTB. Connect GATE2B to the gate of the 2nd n-channel MOSFET. GATE2B is a charge pump with a 50µA pullup current to 5.5V (typ) above OUTB when active (see the *Typical Operating Circuit*).
7	GATE1B	Channel B ORing Switch Gate-Drive Output. Referenced to SENSEB. Connect GATE1B to the gate of the 1st n-channel MOSFET. GATE1B is a charge pump with a 50µA pullup current to 5.5V (typ) above SENSEB when active (see the *Typical Operating Circuit*).
8	SENSEB	Channel B Current-Sense Negative Input. Connect current-sense resistor, R_{SENSE}, from INB to SENSEB.
9	INB	Channel B Input Power and Current-Sense Positive Input. Connect INB to the other end of the current-sense resistor and to the power source.
10	ONB	Channel B On/Off Control Input. ONB sets the undervoltage lockout threshold and resets the part after a fault latch. Drive ONB high to enable the device. Drive ON_ low to disable the device. Connect ONB to INB for the default undervoltage lockout threshold. Connect a resistor-divider from INB to ONB and to GND to program the desired undervoltage lockout threshold.
11	$\overline{\text{FAULTB}}$	Channel B Current-Fault Status Output. $\overline{\text{FAULTB}}$ is an open-drain output. $\overline{\text{FAULTB}}$ goes low after a current-limit fault has exceeded the 2ms (typ) current-limit timeout period (see the *$\overline{\text{FAULT}}$_ section*).
12	GND	Ground
13	OUTA	Channel A Output-Voltage Sense. Connect to the output.
14	GATE2A	Channel A Current-Limiter Switch Gate-Drive Output. Referenced to OUTA. Connect GATE2A to the gate of the 2nd n-channel MOSFET. GATE2A is a charge pump with a 50µA pullup current to 5.5V (typ) above OUTA when active.
15	GATE1A	Channel A ORing Switch Gate-Drive Output. Referenced to SENSEA. Connect GATE1A to the gate of the 1st n-channel MOSFET. GATE1A is a charge pump with a 50µA pullup current to 5.5V (typ) above SENSEA when active.
16	SENSEA	Channel A Current-Sense Negative Input. Connect current-sense resistor, R_{SENSEA}, from INA to SENSEA (see the *Typical Operating Circuit*).

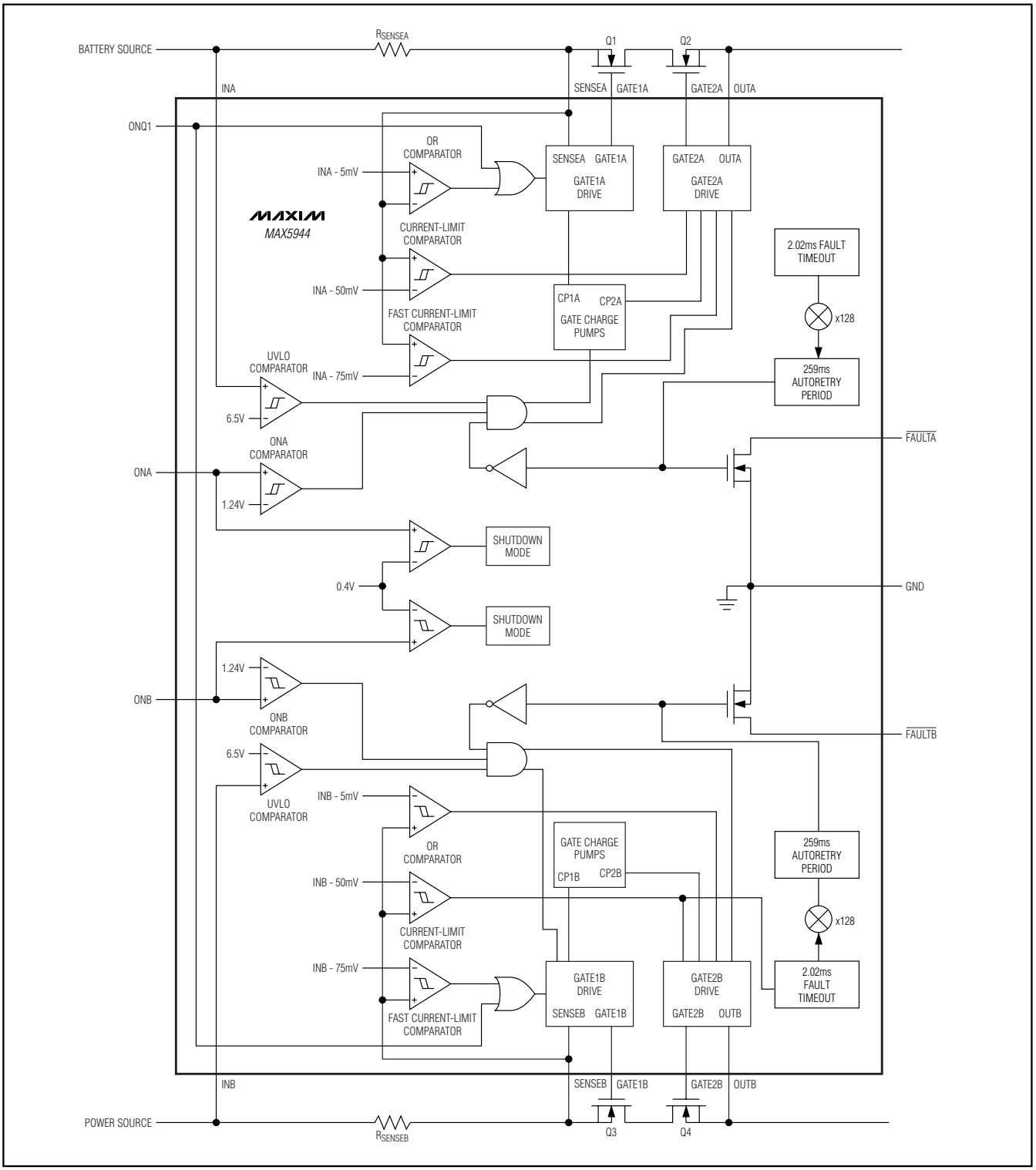

Figure 1. MAX5944 Functional Diagram

Dual FireWire Current Limiter and Low-Drop ORing Switch Controller

Detailed Description

The MAX5944 dual-channel controller IC performs hot-swapping, power-supply ORing, and current limiting for FireWire power-supply applications. The MAX5944 incorporates four MOSFET drivers (GATE1_ and GATE2_) to control external n-channel power MOSFETs to perform low-voltage-drop power-supply ORing (GATE1_), hot-swapping, and current limiting (GATE2_) from the input power supply to the load. A sense resistor provides accurate current limiting. GATE1_ and GATE2_ provide true load disconnect to prevent current flowing from either direction between IN_ and OUT_.

The MAX5944 independent channels remain in low-current shutdown mode when $V_{ON_}$ is below the 0.4V threshold. Low-current shutdown mode disables the MAX5944 channels resulting in less than 10µA supply current per channel. Shutdown places all logic inputs in a high-impedance state, which allows the inputs to be connected to IN_ without drawing additional current from the supply.

When either input supply voltage ($V_{IN_}$) is above 7.5V and $V_{ON_}$ is above the V_{ON_REF} threshold, the MAX5944 channel turns on, sourcing 50µA current from GATE2_ (current regulation), to enhance Q2_ slowly. If the voltage across the current-sense resistor, V_{IS}, is greater than the current-limit threshold, the MAX5944 regulates the GATE2_ voltage to limit the load current at the current-limit level so that V_{IS} is equal to V_{TH}. In normal operation, V_{IS} drops below V_{TH} and GATE2_ rises to approximately 5.5V above OUT.

GATE1_ controls the MAX5944 ORing function. Initially, GATE1_ is off (ONQ1 = low) and the load current conducts through the body diode of Q1_. GATE1_ rises to 5.5V above IN_ when V_{IS} exceeds V_{OR}, thereby enhancing Q1_ and reducing the voltage drop, power dissipation, and heat generation in the power-supply pathway. When a voltage greater than $V_{IN_}$ is connected at OUT_, the higher voltage source commences providing current to the load. The MAX5944 turns off GATE1_ rapidly upon V_{IS} falling below the V_{OR} hysteresis, thus blocking the higher voltage from backdriving $V_{IN_}$. GATE1_ also turns off when the load current drops, causing V_{IS} to fall below $V_{OR_}$ hysteresis.

Current Limiting

The MAX5944 limits the load current by monitoring the voltage across $R_{SENSE_}$ at all times and regulating the current to the load as necessary to keep V_{IS} to its current-limit threshold voltage (V_{TH}). Set the maximum current limit (I_{LIMIT}) by placing the appropriate sense resistor between IN_ and SENSE_, where $I_{LIMIT_} = V_{TH} / R_{SENSE_}$. When the load current is less than I_{LIMIT}, GATE2_ rises to V_{G2} (5.5V) to fully enhance MOSFET Q2_ (see the *Typical Operating Circuit*).

When the load attempts to draw more current than I_{LIMIT}, the MAX5944's GATE2_ pulldown current (I_{G2D}) regulates the current through Q2_, causing OUT_ to act as a constant current source. The output current is limited to I_{LIMIT}. If the current-limit condition persists after the 2ms current-limit timeout period (t_{ILIM}) has expired, the GATE2_ strong pulldown current (I_{G2_OFF}) quickly turns off GATE2_ to disconnect the load from the power supply and FAULT_ asserts low (Figure 2a). If the current-limit duration is less than t_{ILIM}, GATE2_ pulls to V_{GS2} (Figure 2b). During an output short circuit or a gross overload, the load current overshoots and causes V_{IS} to exceed the fast pulldown current-limit threshold voltage (V_{THF}). The MAX5944 responds with much stronger GATE2_ pulldown currents (I_{G2DP} and/or I_{G2DF}) to quickly bring the load current back down to the programmed current limit.

Current-Limit Threshold

The MAX5944 current limit has internal 50mV trip threshold voltages (V_{TH}). Use the following formula to calculate the maximum current:

$$I_{LIMIT} = V_{TH} / R_{SENSE_}$$

where V_{TH} is the 50mV (typ) threshold voltage across $R_{SENSE_}$, and $R_{SENSE_}$ is the sense resistor connected between IN_ and SENSE_.

Power-Supply ORing, GATE1_

GATE1_ controls the MAX5944 ORing function. The MAX5944 accomplishes a very low voltage-drop diode ORing function using n-channel power MOSFETs. Initially, GATE1_ is off (ONQ1 = low) and the load current conducts through the body diode of Q1_, Figure 3. GATE1_ rises to 5.5V above SENSE_ when V_{IS} exceeds the 5mV V_{OR} threshold, enhancing Q1_. Q1_'s low $R_{DS(ON)}$ provides a very low voltage drop across its source to drain, which results in less power dissipation and heat generation in the power-supply path than a traditional diode.

The MAX5944 continuously monitors the load currents through the voltage drops, V_{IS}, across the current-sensing resistors. Q1_ turns off rapidly when V_{IS} decreases below the V_{OR} minus its hysteresis.

Connect ONQ1 to GND for a normal ORing function. Drive ONQ1 high to force Q1 on, regardless of the load-current condition, as long as voltages at IN_ and ON_ exceed V_{UVLO} and $V_{ON\text{-}REF}$, repectively, and the device is not in a current-fault shutdown.

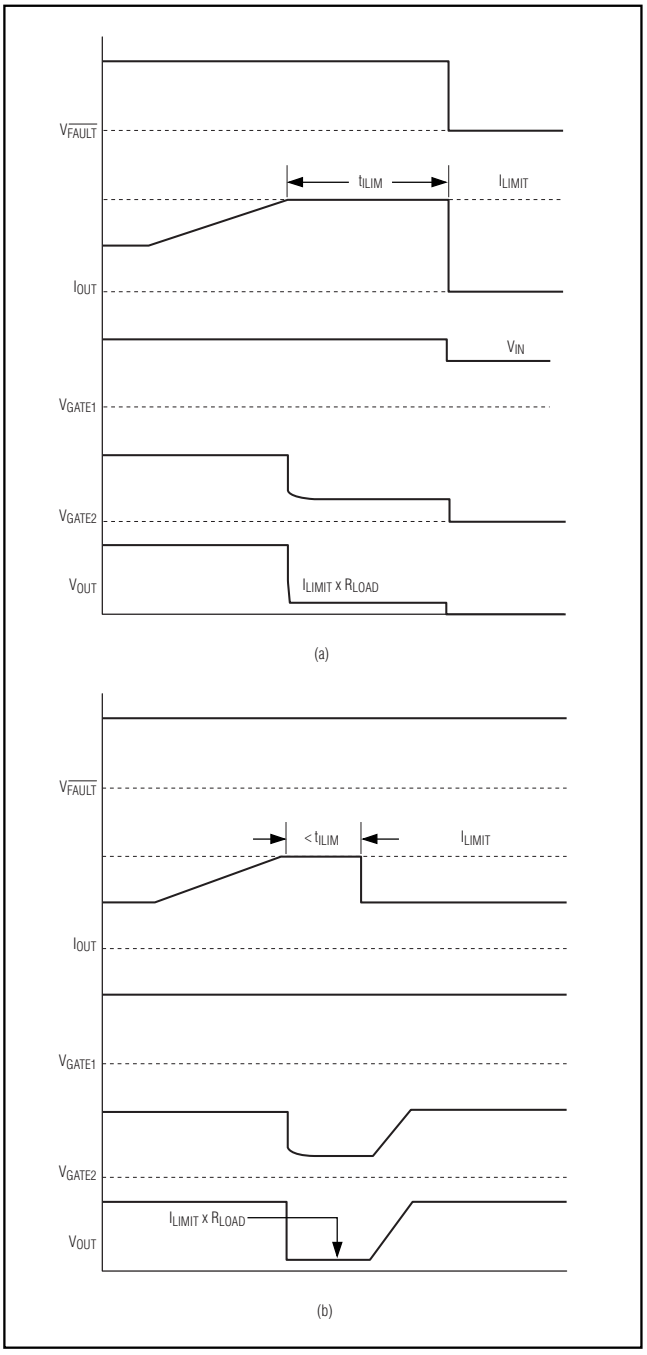

Figure 2. MAX5944 Current-Limit Timing Diagram

When a higher voltage supply is connected at OUTA (Figure 4), V_{IS} drops below the ORing threshold. The MAX5944 immediately turns off Q1A, blocking reverse-current flow from OUTA to INA. Power is then routed

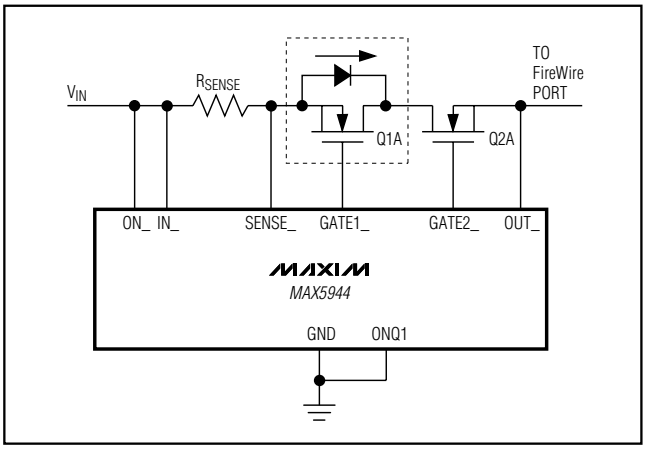

Figure 3. Q1 Current Path During Inital Startup

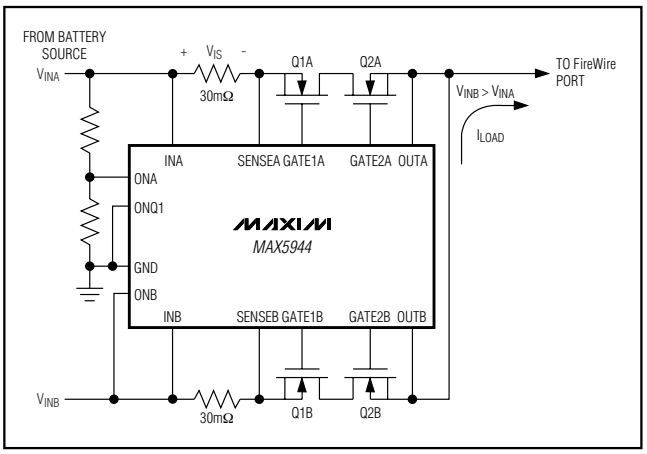

Figure 4. MAX5944 ORing Controller Rerouting Load Current

from the higher supply input (INB) to OUTB, and then to the load (Figure 5).

Reverse-Current Override (ONQ1 = HIGH)

Drive ONQ1 high to disable the MAX5944 power-supply ORing. Disabling the MAX5944 ORing function allows reverse-current flow through the power-supply system. When ONQ1 is high, GATE1A and GATE1B remain fully enhanced as long as their respective $V_{IN_}$ is greater than 7.5V, $V_{ON_}$ is above the 1.24V threshold, and the channels are not in a current-limit fault condition. The MAX5944 reverse-current flow feature permits a higher voltage source connected at Port 1 to be routed to Port 2, as long as the voltage at both inputs (IN_) is initially above the minimum 7.5V operating range, see Figure 6.

Dual FireWire Current Limiter and Low-Drop ORing Switch Controller

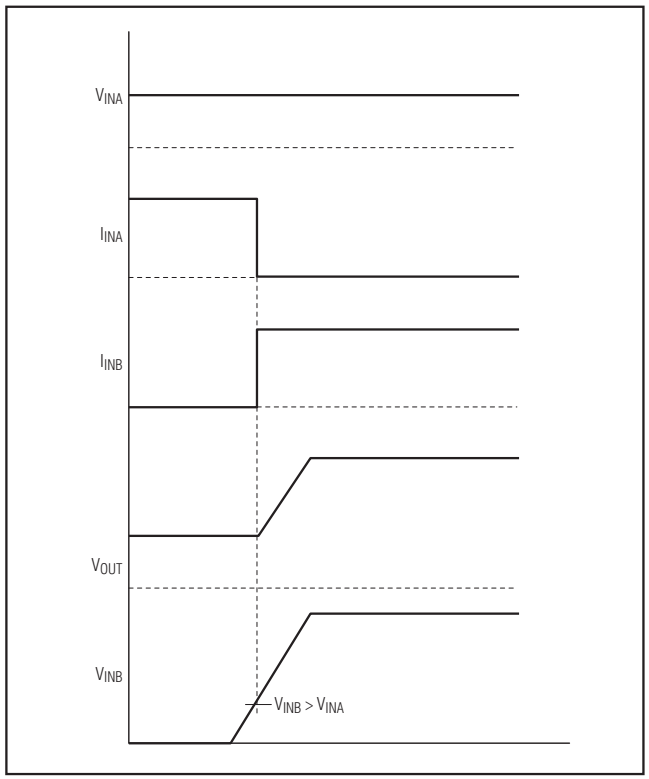

Figure 5. MAX5944 Power Switch Over ORing Timing Diagram

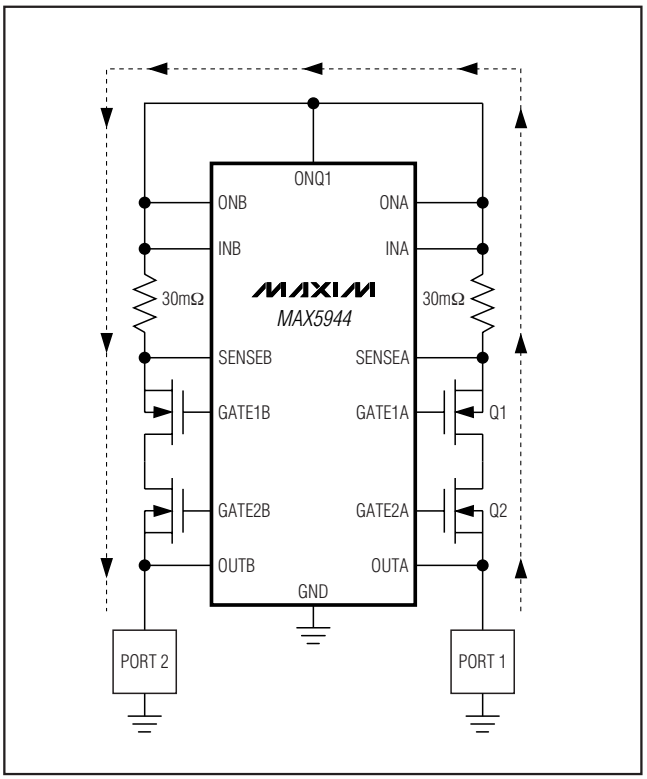

Figure 6. MAX5944 Operating in Reverse-Current Mode (Routing Power from Port 1 to Port 2)

Undervoltage Lockout

The MAX5944 dual-channel, independent current-limit switches have independent ON/OFF control. Both channels operate from 7.5V to 37V and have default 6.5V undervoltage lockout thresholds. The external MOSFETs remain off as long as $V_{IN_} < 6.5V$ and/or $V_{ON_} < V_{ON_REF}$. The UVLO thresholds are programmable by connecting a resistor-divider at ON_. When $V_{ON_} > 1.24V$ and $V_{IN_} > 7.5V$, GATE2_ enhances to 5.5V, with respect to OUT_ and the MAX5944 switch goes into normal operation.

Program the switches' individual turn-on threshold voltages using the following formula:

$$R1 = \left(\frac{V_{TURN-ON}}{1.24} - 1\right) \times R2$$

where $V_{TURN-ON}$ is the desired turn-on voltage of channel A and/or B. Choose an R2 value in the 1kΩ range to minimize error due to ON input bias current.

When operating the MAX5944, ON_ must remain above its 1.24V threshold. If $V_{ON_}$ falls below its 1.24V threshold, the power-supply MOSFETs turn off immediately (less than 1µs). This allows the power supply to disconnect in the event of a fault condition detected by the system, such as shorting of the output to a different power-supply voltage or a FireWire signal pin. If possible transient conditions exist at the main power-supply line (IN_), place an RC filter at ON_ to reject transient voltage dips to prevent unnecessary power-supply interruptions.

The MAX5944 remain in low-current shutdown mode when $V_{ON_}$ is below the 0.4V threshold. Low-current shutdown mode disables the channel resulting in less than 10µA supply current.

Current-Fault Status Outputs ($\overline{FAULT_}$)

$\overline{FAULT_}$ are high-voltage, open-drain outputs that pull low when a current-limit fault shutdown has occurred. $\overline{FAULT_}$ remain low until the next startup cycle.

Autoretry Fault Management

The MAX5944 autoretry feature attempts to restart after a t_{OFF} of 259ms, limiting the duty cycle of the MOSFETs

Dual FireWire Current Limiter and Low-Drop ORing Switch Controller

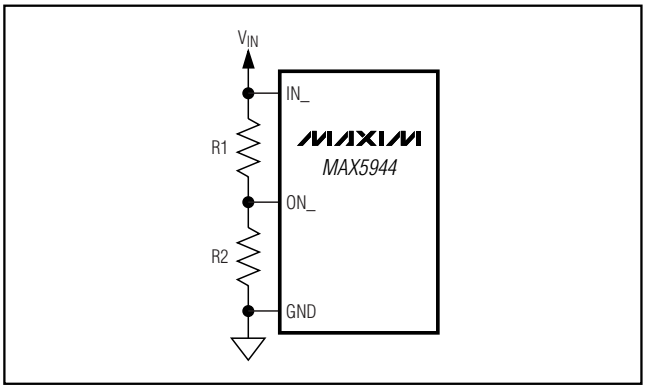

Figure 7. Setting the MAX5944 Turn-On Voltage

to 1/129 under continuous fault conditions. $\overline{FAULT}$_ deasserts every time a restart attempt is made.

Applications Information

Startup Considerations

Set the appropriate current-limit threshold for a successful MAX5944 startup. A successful startup is dependent on the MAX5944 current-limit threshold and timeout period. A large capacitor at OUT will result in a charging current equivalent to the current-limit threshold and may cause the MAX5944 to exceed its 2ms timeout period, if the current-limit threshold is set too low. Use the following formula to compute the minimum current-limit setting:

$$I_{LIMIT} > \frac{C_{OUT} \times V_{IN}}{t_{ILIM}} + I_{LOAD}$$

where I_{LIMIT} is the programmed current limit, C_{OUT} is the capacitor at OUT, V_{IN} is the supply voltage, t_{ILIM} is the 2ms current-limit timeout period, and I_{LOAD} is the load current during startup. With V_{IN} = 12V, C_{OUT} = 220µF, and I_{LOAD} = 0, set the MAX5944 current limit greater than 1.3A. This calculation does not include tolerances.

Choosing RSENSE

Select a sense resistor that causes the current-limit voltage drop at a current-limit level above the maximum normal operating current. Typically, set the current limit at 1.2 to 1.5 times the nominal load current.

Choose the sense-resistor power rating to accommodate a current-limit condition:

$$P_{SENSE} = (V_{TH})^2 / R_{SENSE}$$

where P_{SENSE} is the power dissipated across R_{SENSE} during a current-limit fault.

MOSFET Selection

Select external MOSFETs according to the application current level. The MOSFETs' on-resistance ($R_{DS(ON)}$) should be chosen low enough to have minimum voltage drop at full load to limit the MOSFET power dissipation. High $R_{DS(ON)}$ also causes large output ripple if there is a pulsating load. Determine the device power rating to accommodate a short-circuit condition on the board, at startup, and when the device is in autoretry mode.

During normal operation, the external MOSFETs dissipate little power. The power dissipated in normal operation is:

$$P = I_{LOAD2} \times R_{DS(ON)}$$

The most power dissipation will occur during a short-circuit event, resulting in high power dissipated in Q2 (Figure 8) during the timeout period for the MAX5944, where the power dissipated across Q2 is:

$$P_{Q2} = (V_{IN} - V_{IS} - V_{Q1}) \times I_{LIMIT}$$

Transient Protection

If IN_ or OUT_ experiences a fast transient rise in voltage, the drain-to-gate overlap capacitance of GATE1_ and/or GATE2_ FETs may be sufficient to enhance one of the transistors, allowing current to flow. If the circuit is subjected to large transients, connect capacitors from the gate to source across the appropriate MOSFET to prevent the overlap capacitance from turning on the device. This results in the turn-off time of the FETs to increase due to the additional discharge of the capacitor. Use the minimum capacitor value that will prevent reverse currents from flowing in hot-plug situations.

FireWire Power Management

The MAX5944 serves to regulate and protect FireWire power over a system interface. The MAX5944 programmable features that make it suitable for both power-provider and power-receiver applications. Figure 9 shows a high-end two-port FireWire power-management system using two MAX5944 dual-channel FireWire current-limiting ICs.

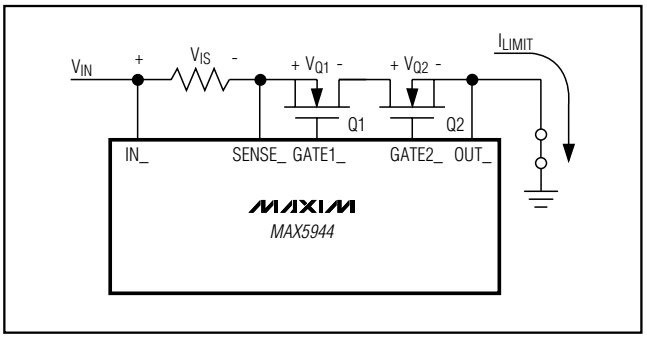

Figure 8. Power Dissipated Across MOSFET Q2 During a Short-Circuit Fault

Dual FireWire Current Limiter and Low-Drop ORing Switch Controller

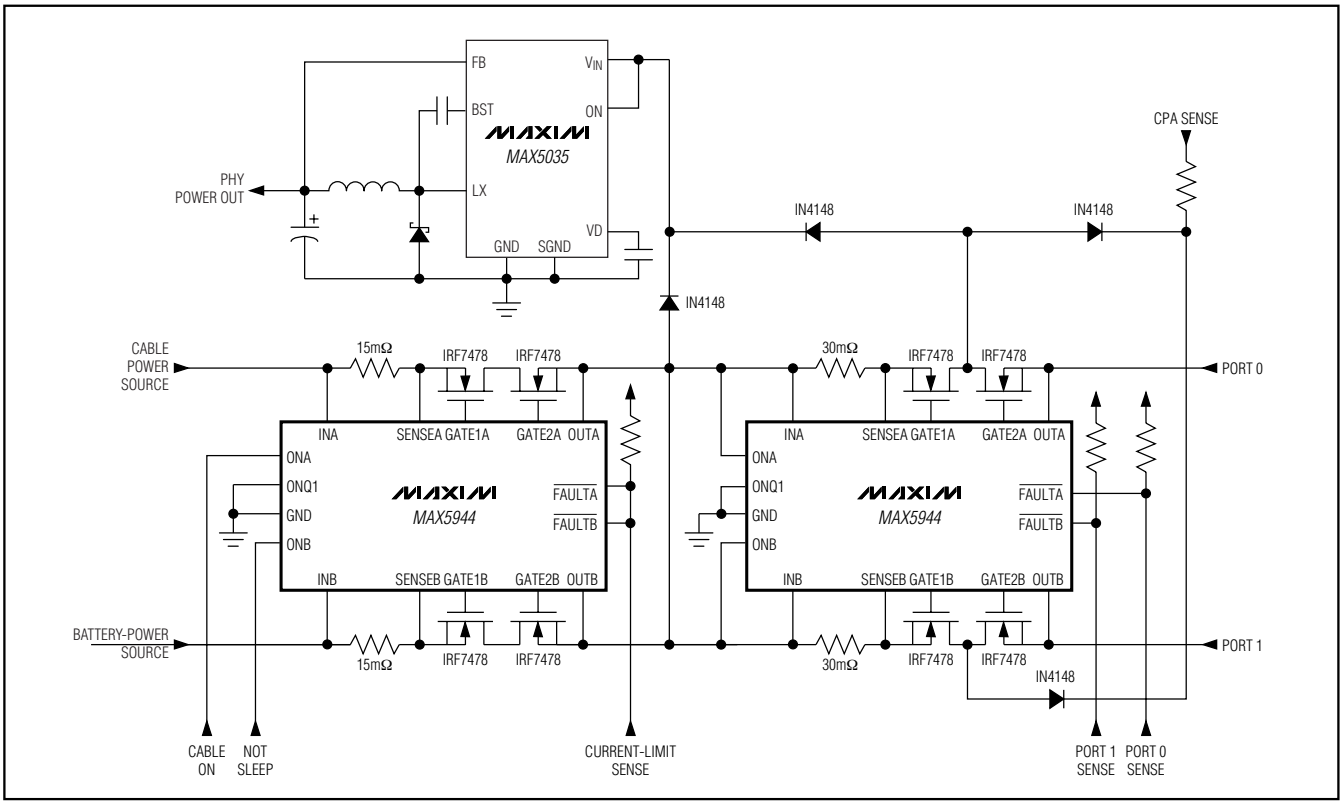

Figure 9. Two-Port FireWire Power Provider

Typical Operating Circuit

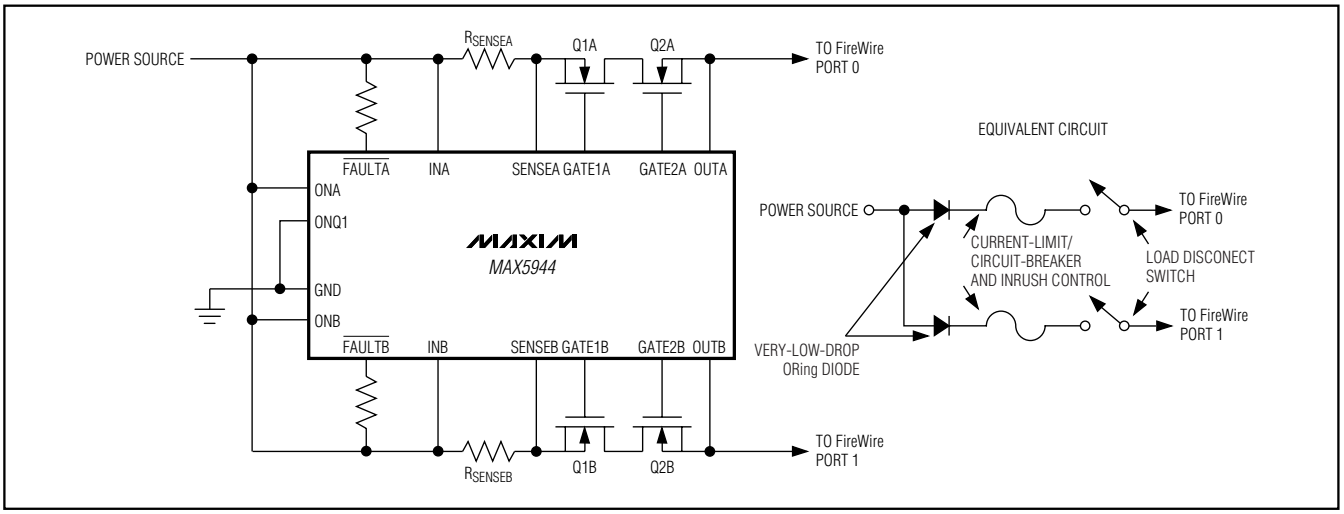

Chip Information

TRANSISTOR COUNT: 4,648

PROCESS: BiCMOS

Dual FireWire Current Limiter and Low-Drop ORing Switch Controller

Package Information

(The package drawing(s) in this data sheet may not reflect the most current specifications. For the latest package outline information go to **www.maxim-ic.com/packages**.)

SOICN .EPS

	INCHES		MILLIMETERS	
DIM	MIN	MAX	MIN	MAX
A	0.053	0.069	1.35	1.75
A1	0.004	0.010	0.10	0.25
B	0.014	0.019	0.35	0.49
C	0.007	0.010	0.19	0.25
e	0.050 BSC		1.27 BSC	
E	0.150	0.157	3.80	4.00
H	0.228	0.244	5.80	6.20
L	0.016	0.050	0.40	1.27

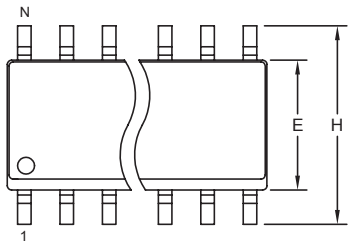

TOP VIEW

VARIATIONS:

	INCHES		MILLIMETERS			
DIM	MIN	MAX	MIN	MAX	N	MS012
D	0.189	0.197	4.80	5.00	8	AA
D	0.337	0.344	8.55	8.75	14	AB
D	0.386	0.394	9.80	10.00	16	AC

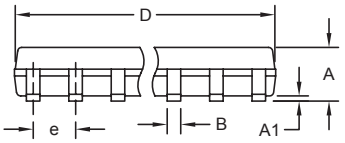

FRONT VIEW

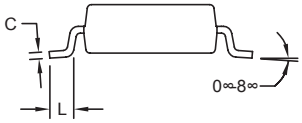

SIDE VIEW

NOTES:
1. D&E DO NOT INCLUDE MOLD FLASH.
2. MOLD FLASH OR PROTRUSIONS NOT TO EXCEED 0.15mm (.006").
3. LEADS TO BE COPLANAR WITHIN 0.10mm (.004").
4. CONTROLLING DIMENSION: MILLIMETERS.
5. MEETS JEDEC MS012.
6. N = NUMBER OF PINS.

DALLAS SEMICONDUCTOR MAXIM

PROPRIETARY INFORMATION

TITLE: PACKAGE OUTLINE, .150" SOIC

APPROVAL	DOCUMENT CONTROL NO.	REV.	
	21-0041	B	1/1

Maxim cannot assume responsibility for use of any circuitry other than circuitry entirely embodied in a Maxim product. No circuit patent licenses are implied. Maxim reserves the right to change the circuitry and specifications without notice at any time.

© 2004 Maxim Integrated Products Printed USA MAXIM is a registered trademark of Maxim Integrated Products.