EVALUATION KIT AVAILABLE

MAX5800/MAX5801/MAX5802

Ultra-Small, Dual-Channel, 8-/10-/12-Bit Buffered Output DACs with Internal Reference and I²C Interface

General Description

The MAX5800/MAX5801/MAX5802 2-channel, low-power, 8-/10-/12-bit, voltage-output digital-to-analog converters (DACs) include output buffers and an internal reference that is selectable to be 2.048V, 2.500V, or 4.096V. The MAX5800/MAX5801/MAX5802 accept a wide supply voltage range of 2.7V to 5.5V with extremely low power (1.5mW) consumption to accommodate most low-voltage applications. A precision external reference input allows rail-to-rail operation and presents a 100kΩ (typ) load to an external reference.

The MAX5800/MAX5801/MAX5802 have an I²C-compatible, 2-wire interface that operates at clock rates up to 400kHz. The DAC output is buffered and has a low supply current of less than 250µA per channel and a low offset error of ±0.5mV (typ). On power-up, the MAX5800/MAX5801/MAX5802 reset the DAC outputs to zero, providing additional safety for applications that drive valves or other transducers which need to be off on power-up. The internal reference is initially powered down to allow use of an external reference. The MAX5800/MAX5801/MAX5802 allow simultaneous output updates using software LOAD commands.

A clear logic input ($\overline{CLR}$) allows the contents of the CODE and the DAC registers to be cleared asynchronously and sets the DAC outputs to zero. The MAX5800/MAX5801/MAX5802 are available in a small 10-pin µMAX® and an ultra-small, 10-pin TDFN package and are specified over the -40°C to +125°C temperature range.

Applications

Programmable Voltage and Current Sources

Gain and Offset Adjustment

Automatic Tuning and Optical Control

Power Amplifier Control and Biasing

Process Control and Servo Loops

Portable Instrumentation

Data Acquisition

µMAX is a registered trademark of Maxim Integrated Products, Inc.

***Ordering Information* appears at end of data sheet.**

Benefits and Features

- **Two High-Accuracy DAC Channels**
  - ✧ **12-Bit Accuracy Without Adjustment**
  - ✧ **±1 LSB INL Buffered Voltage Output**
  - ✧ **Monotonic Over All Operating Conditions**
  - ✧ **Independent Mode Settings for Each DAC**
- **Three Precision Selectable Internal References**
  - ✧ **2.048V, 2.500V, or 4.096V**
- **Internal Output Buffer**
  - ✧ **Rail-to-Rail Operation with External Reference**
  - ✧ **4.5µs Settling Time**
  - ✧ **Outputs Directly Drive 2kΩ Loads**
- **Small 5mm x 3mm 10-Pin µMAX or Ultra-Small 3mm x 3mm 10-Pin TDFN Package**
- **Wide 2.7V to 5.5V Supply Range**
- **Separate 1.8V to 5.5V V_{DDIO} Power-Supply Input**
- **Fast 400kHz I²C-Compatible, 2-Wire Serial Interface**
- **Power-On-Reset to Zero-Scale DAC Output**
- **$\overline{CLR}$ For Asynchronous Control**
- **Three Software-Selectable Power-Down Output Impedances**
  - ✧ **1kΩ, 100kΩ, or High Impedance**
- **Low 350µA Supply Current at 3V V_{DD}**

Functional Diagram

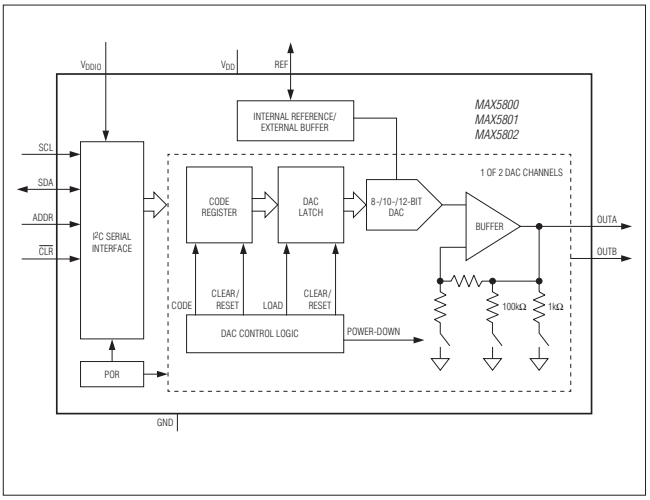

For related parts and recommended products to use with this part, refer to: www.maximintegrated.com/MAX5800.related

For pricing, delivery, and ordering information, please contact Maxim Direct at 1-888-629-4642, or visit Maxim's website at www.maximintegrated.com.

19-6461; Rev 0; 9/12

Ultra-Small, Dual-Channel, 8-/10-/12-Bit Buffered Output DACs with Internal Reference and I²C Interface

ABSOLUTE MAXIMUM RATINGS

V_{DD}, V_{DDIO} to GND ..... -0.3V to +6V
OUT_, REF to GND ..... -0.3V to the lower of (V_{DD} + 0.3V) and +6V
SCL, SDA, $\overline{CLR}$ to GND ..... -0.3V to +6V
ADDR to GND .....-0.3V to the lower of (V_{DDIO} + 0.3V) and +6V
Continuous Power Dissipation (T_A = +70°C)
μMAX (derate at 8.8mW/°C above 70°C).....707mW
TDFN (derate at 24.4mW/°C above 70°C).....1951mW
Maximum Continuous Current into Any Pin ..... ±50mA
Operating Temperature Range..... -40°C to +125°C
Storage Temperature Range..... -65°C to +150°C
Lead Temperature (soldering, 10s) .....+300°C
Soldering Temperature (reflow) ..... +260°C

Stresses beyond those listed under "Absolute Maximum Ratings" may cause permanent damage to the device. These are stress ratings only, and functional operation of the device at these or any other conditions beyond those indicated in the operational sections of the specifications is not implied. Exposure to absolute maximum rating conditions for extended periods may affect device reliability.

PACKAGE THERMAL CHARACTERISTICS (Note 1)

μMAX
Junction-to-Ambient Thermal Resistance (θ_{JA}) .....113°C/W
Junction-to-Case Thermal Resistance (θ_{JC}) .....42°C/W

TDFN
Junction-to-Ambient Thermal Resistance (θ_{JA}) .....41°C/W
Junction-to-Case Thermal Resistance (θ_{JC}) .....9°C/W

Note 1: Package thermal resistances were obtained using the method described in JEDEC specification JESD51-7, using a four-layer board. For detailed information on package thermal considerations, refer to **www.maximintegrated.com/thermal-tutorial**.

ELECTRICAL CHARACTERISTICS

(V_{DD} = 2.7V to 5.5V, V_{DDIO} = 1.8V to 5.5V, V_{GND} = 0V, C_L = 200pF, R_L = 2kΩ, T_A = -40°C to +125°C, unless otherwise noted. Typical values are at T_A = +25°C.) (Note 2)

PARAMETER	SYMBOL	CONDITIONS	MIN	TYP	MAX	UNITS
DC PERFORMANCE (Note 3)						
Resolution and Monotonicity	N	MAX5800	8			Bits
		MAX5801	10			
		MAX5802	12			
Integral Nonlinearity (Note 4)	INL	MAX5800	-0.25	±0.05	+0.25	LSB
		MAX5801	-0.5	±0.25	+0.5	
		MAX5802	-1	±0. 5	+1	
Differential Nonlinearity (Note 4)	DNL	MAX5800	-0.25	±0.05	+0.25	LSB
		MAX5801	-0.5	±0.1	+0.5	
		MAX5802	-1	±0.2	+1	
Offset Error (Note 5)	OE		-5	±0.5	+5	mV
Offset Error Drift				±10		μV/°C
Gain Error (Note 5)	GE		-1.0	±0.1	+1.0	%FS
Gain Temperature Coefficient		With respect to V_{REF}		±3.0		ppm of FS/°C
Zero-Scale Error			0		10	mV
Full-Scale Error		With respect to V_{REF}	-0.5		+0.5	%FS

ELECTRICAL CHARACTERISTICS (continued)

(V_{DD} = 2.7V to 5.5V, V_{DDIO} = 1.8V to 5.5V, V_{GND} = 0V, C_L = 200pF, R_L = 2kΩ, T_A = -40°C to +125°C, unless otherwise noted. Typical values are at T_A = +25°C.) (Note 2)

PARAMETER	SYMBOL	CONDITIONS		MIN	TYP	MAX	UNITS
DAC OUTPUT CHARACTERISTICS							
Output Voltage Range (Note 6)		No load		0		V_{DD}	V
		2kΩ load to GND		0		V_{DD} - 0.2	
		2kΩ load to V_{DD}		0.2		V_{DD}	
Load Regulation		V_{OUT} = V_{FS}/2	V_{DD} = 3V ±10%, $\|I_{OUT}\| \le$ 5mA		300		µV/mA
			V_{DD} = 5V ±10%, $\|I_{OUT}\| \le$ 10mA		300		
DC Output Impedance		V_{OUT} = V_{FS}/2	V_{DD} = 3V ±10%, $\|I_{OUT}\| \le$ 5mA		0.3		Ω
			V_{DD} = 5V ±10%, $\|I_{OUT}\| \le$ 10mA		0.3		
Maximum Capacitive Load Handling	C_L				500		pF
Resistive Load Handling	R_L			2			kΩ
Short-Circuit Output Current		V_{DD} = 5.5V	Sourcing (output shorted to GND)		30		mA
			Sinking (output shorted to V_{DD})		50		
DC Power-Supply Rejection		V_{DD} = 3V ±10% or 5V ±10%			100		µV/V
DYNAMIC PERFORMANCE							
Voltage-Output Slew Rate	SR	Positive and negative			1.0		V/µs
Voltage-Output Settling Time		¼ scale to ¾ scale, to ≤ 1 LSB, MAX5800			2.2		µs
		¼ scale to ¾ scale, to ≤ 1 LSB, MAX5801			2.6		
		¼ scale to ¾ scale, to ≤ 1 LSB, MAX5802			4.5		
DAC Glitch Impulse		Major code transition			7		nV*s
Channel-to-Channel Feedthrough (Note 7)		External reference			3.5		nV*s
		Internal reference			3.3		
Digital Feedthrough		Code = 0, all digital inputs from 0V to V_{DDIO}			0.2		nV*s
Power-Up Time		Startup calibration time (Note 8)			200		µs
		From power-down			50		µs

ELECTRICAL CHARACTERISTICS (continued)

(V_{DD} = 2.7V to 5.5V, V_{DDIO} = 1.8V to 5.5V, V_{GND} = 0V, C_L = 200pF, R_L = 2kΩ, T_A = -40°C to +125°C, unless otherwise noted. Typical values are at T_A = +25°C.) (Note 2)

PARAMETER	SYMBOL	CONDITIONS		MIN	TYP	MAX	UNITS
Output Voltage-Noise Density (DAC Output at Midscale)		External reference	f = 1kHz		90		nV/√Hz
			f = 10kHz		82		
		2.048V internal reference	f = 1kHz		112		
			f = 10kHz		102		
		2.5V internal reference	f = 1kHz		125		
			f = 10kHz		110		
		4.096V internal reference	f = 1kHz		160		
			f = 10kHz		145		
Integrated Output Noise (DAC Output at Midscale)		External reference	f = 0.1Hz to 10Hz		12		μV_{P-P}
			f = 0.1Hz to 10kHz		76		
			f = 0.1Hz to 300kHz		385		
		2.048V internal reference	f = 0.1Hz to 10Hz		14		
			f = 0.1Hz to 10kHz		91		
			f = 0.1Hz to 300kHz		450		
		2.5V internal reference	f = 0.1Hz to 10Hz		15		
			f = 0.1Hz to 10kHz		99		
			f = 0.1Hz to 300kHz		470		
		4.096V internal reference	f = 0.1Hz to 10Hz		16		
			f = 0.1Hz to 10kHz		124		
			f = 0.1Hz to 300kHz		490		
Output Voltage-Noise Density (DAC Output at Full Scale)		External reference	f = 1kHz		114		nV/√Hz
			f = 10kHz		99		
		2.048V internal reference	f = 1kHz		175		
			f = 10kHz		153		
		2.5V internal reference	f = 1kHz		200		
			f = 10kHz		174		
		4.096V internal reference	f = 1kHz		295		
			f = 10kHz		255		
Integrated Output Noise (DAC Output at Full Scale)		External reference	f = 0.1Hz to 10Hz		13		μV_{P-P}
			f = 0.1Hz to 10kHz		94		
			f = 0.1Hz to 300kHz		540		
		2.048V internal reference	f = 0.1Hz to 10Hz		19		
			f = 0.1Hz to 10kHz		143		
			f = 0.1Hz to 300kHz		685		
		2.5V internal reference	f = 0.1Hz to 10Hz		21		
			f = 0.1Hz to 10kHz		159		
			f = 0.1Hz to 300kHz		705		
		4.096V internal reference	f = 0.1Hz to 10Hz		26		
			f = 0.1Hz to 10kHz		213		
			f = 0.1Hz to 300kHz		750		

ELECTRICAL CHARACTERISTICS (continued)

(V_{DD} = 2.7V to 5.5V, V_{DDIO} = 1.8V to 5.5V, V_{GND} = 0V, C_L = 200pF, R_L = 2kΩ, T_A = -40°C to +125°C, unless otherwise noted. Typical values are at T_A = +25°C.) (Note 2)

PARAMETER	SYMBOL	CONDITIONS		MIN	TYP	MAX	UNITS
REFERENCE INPUT							
Reference Input Range	V_{REF}			1.24		V_{DD}	V
Reference Input Current	I_{REF}	V_{REF} = V_{DD} = 5.5V			55	74	µA
Reference Input Impedance	R_{REF}			75	100		kΩ
REFERENCE OUPUT							
Reference Output Voltage	V_{REF}	V_{REF} = 2.048V, T_A = +25°C		2.043	2.048	2.053	V
		V_{REF} = 2.5V, T_A = +25°C		2.494	2.5	2.506	
		V_{REF} = 4.096V, T_A = +25°C		4.086	4.096	4.106	
Reference Output Noise Density		V_{REF} = 2.048V	f = 1kHz		129		nV/√Hz
			f = 10kHz		122		
		V_{REF} = 2.500V	f = 1kHz		158		
			f = 10kHz		151		
		V_{REF} = 4.096V	f = 1kHz		254		
			f = 10kHz		237		
Integrated Reference Output Noise		V_{REF} = 2.048V	f = 0.1Hz to 10Hz		12		$µV_{P-P}$
			f = 0.1Hz to 10kHz		110		
			f = 0.1Hz to 300kHz		390		
		V_{REF} = 2.500V	f = 0.1Hz to 10Hz		15		
			f = 0.1Hz to 10kHz		129		
			f = 0.1Hz to 300kHz		430		
		V_{REF} = 4.096V	f = 0.1Hz to 10Hz		20		
			f = 0.1Hz to 10kHz		205		
			f = 0.1Hz to 300kHz		525		
Reference Temperature Coefficient (Note 9)		MAX5802A			±3.7	±10	ppm/°C
		MAX5800/MAX5801/MAX5802B			±10	±25	
Reference Drive Capacity		External load			25		kΩ
Reference Capacitive Load					200		pF
Reference Load Regulation		I_{SOURCE} = 0 to 500µA			2		mV/mA
Reference Line Regulation					0.05		mV/V
POWER REQUIREMENTS							
Supply Voltage	V_{DD}	V_{REF} = 4.096V		4.5		5.5	V
		All other options		2.7		5.5	
I/O Supply Voltage	V_{DDIO}			1.8		5.5	V
Interface Supply Current (Note 10)	I_{DDIO}					1	µA

ELECTRICAL CHARACTERISTICS (continued)

(V_{DD} = 2.7V to 5.5V, V_{DDIO} = 1.8V to 5.5V, V_{GND} = 0V, C_L = 200pF, R_L = 2kΩ, T_A = -40°C to +125°C, unless otherwise noted. Typical values are at T_A = +25°C.) (Note 2)

PARAMETER	SYMBOL	CONDITIONS		MIN	TYP	MAX	UNITS
Supply Current (Note 10)	I_{DD}	Internal reference	V_{REF} = 2.048V		0.55	0.75	mA
			V_{REF} = 2.5V		0.60	0.80	
			V_{REF} = 4.096V		0.65	0.90	
		External reference	V_{REF} = 3V		0.40	0.60	
			V_{REF} = 5V		0.55	0.75	
Power-Down Mode Supply Current	I_{PD}	Both DACs off, internal reference ON			140		µA
		Both DACs off, internal reference OFF, T_A = -40°C to +85°C			0.5	1	
		Both DACs off, internal reference OFF, T_A = +125°C			1.2	2.5	
DIGITAL INPUT CHARACTERISTICS (SCL, SDA, ADDR, $\overline{CLR}$)							
Input High Voltage	V_{IH}	2.2V < V_{DDIO} < 5.5V		0.7 x V_{DDIO}			V
		1.8V < V_{DDIO} < 2.2V		0.8 x V_{DDIO}			V
Input Low Voltage	V_{IL}	2.2V < V_{DDIO} < 5.5V				0.3 x V_{DDIO}	V
		1.8V < V_{DDIO} < 2.2V				0.2 x V_{DDIO}	
Hysteresis Voltage	V_H				0.15		V
Input Leakage Current	I_{IN}	V_{IN} = 0V or V_{DDIO} (Note 10)			±0.1	±1	µA
Input Capacitance (Note 10)	C_{IN}					10	pF
ADDR Pullup/Pulldown Strength	R_{PU}, R_{PD}	(Note 11)		30	50	90	kΩ
DIGITAL OUTPUT (SDA)							
Output Low Voltage	V_{OL}	I_{SINK} = 3mA				0.2	V
I²C TIMING CHARACTERISTICS (SCL, SDA, $\overline{CLR}$)							
SCL Clock Frequency	f_{SCL}					400	kHz
Bus Free Time Between a STOP and a START Condition	t_{BUF}			1.3			µs
Hold Time Repeated for a START Condition	$t_{HD;STA}$			0.6			µs
SCL Pulse Width Low	t_{LOW}			1.3			µs
SCL Pulse Width High	t_{HIGH}			0.6			µs
Setup Time for Repeated START Condition	$t_{SU;STA}$			0.6			µs
Data Hold Time	$t_{HD;DAT}$			0		900	ns
Data Setup Time	$t_{SU;DAT}$			100			ns

ELECTRICAL CHARACTERISTICS (continued)

(V_{DD} = 2.7V to 5.5V, V_{DDIO} = 1.8V to 5.5V, V_{GND} = 0V, C_L = 200pF, R_L = 2kΩ, T_A = -40°C to +125°C, unless otherwise noted. Typical values are at T_A = +25°C.) (Note 2)

PARAMETER	SYMBOL	CONDITIONS	MIN	TYP	MAX	UNITS
SDA and SCL Receiving Rise Time	t_r		20 + C_B/10		300	ns
SDA and SCL Receiving Fall Time	t_f		20 + C_B/10		300	ns
SDA Transmitting Fall Time	t_f		20 + C_B/10		250	ns
Setup Time for STOP Condition	$t_{SU;STO}$		0.6			µs
Bus Capacitance Allowed	C_B	V_{DD} = 2.7V to 5.5V	10		400	pF
Pulse Width of Suppressed Spike	t_{SP}			50		ns
$\overline{CLR}$ Removal Time Prior to a Recognized START	t_{CLRSTA}		100			ns
$\overline{CLR}$ Pulse Width Low	t_{CLPW}		20			ns

Note 2: Limits are 100% production tested at T_A = +25°C and/or T_A = +125°C. Limits over the operating temperature range and relevant supply voltage range are guaranteed by design and characterization. Typical values are at T_A = +25°C and are not guaranteed.

Note 3: DC Performance is tested without load.

Note 4: Linearity is tested with unloaded outputs to within 20mV of GND and V_{DD}.

Note 5: Gain and offset calculated from measurements made with V_{REF} = V_{DD} at codes 30 and 4065 for MAX5802, codes 8 and 1016 for MAX5801, and codes 2 and 254 for MAX5800.

Note 6: Subject to zero and full-scale error limits and V_{REF} settings.

Note 7: Measured with the DAC outputs at midscale with one channel transitioning 0 to full scale.

Note 8: On power-up, the device initiates an internal 200µs (typ) calibration sequence. All commands issued during this time will be ignored.

Note 9: Guaranteed by design.

Note 10: Both channels active at V_{FS}, unloaded. Static logic inputs with V_{IL} = V_{GND} and V_{IH} = V_{DDIO}.

Note 11: An unconnected condition on the ADDR pin is sensed via a resistive pullup and pulldown operation; for proper operation, the ADDR pin should be tied to V_{DDIO}, GND, or left unconnected with minimal capacitance.

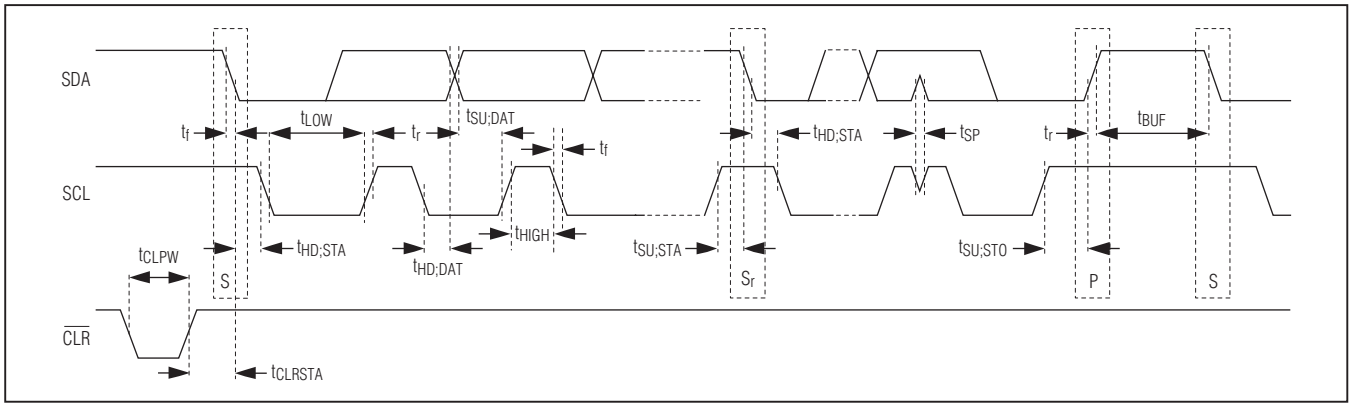

Figure 1. I²C Serial Interface Timing Diagram

Ultra-Small, Dual-Channel, 8-/10-/12-Bit Buffered Output DACs with Internal Reference and I²C Interface

Typical Operating Characteristics

(MAX5802, 12-bit performance, T_A = +25°C, unless otherwise noted.)

INL vs. CODE

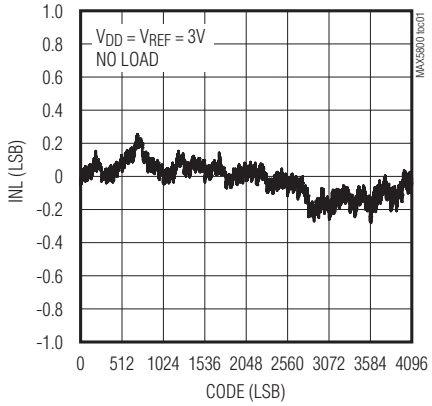

INL vs. CODE

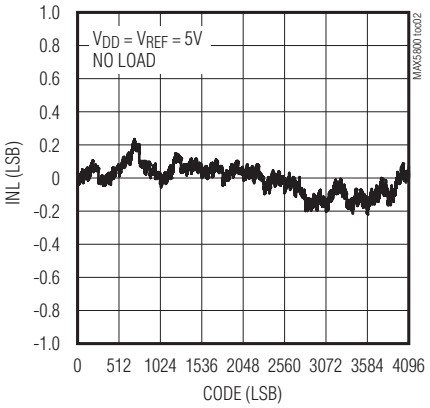

DNL vs. CODE

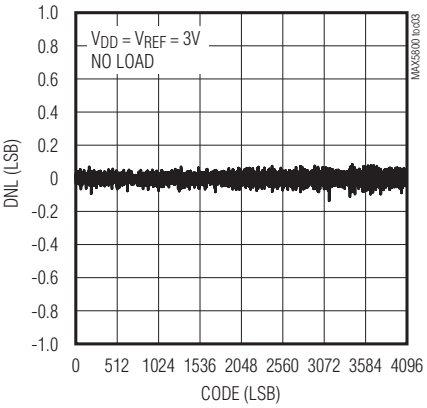

DNL vs. CODE

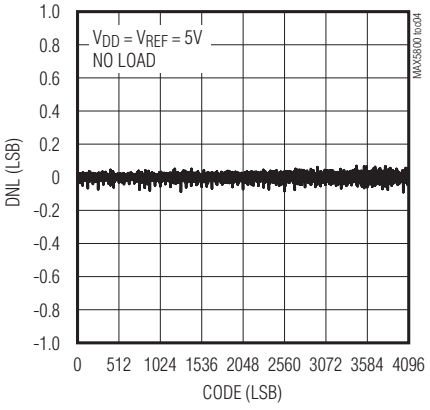

INL AND DNL vs. SUPPLY VOLTAGE

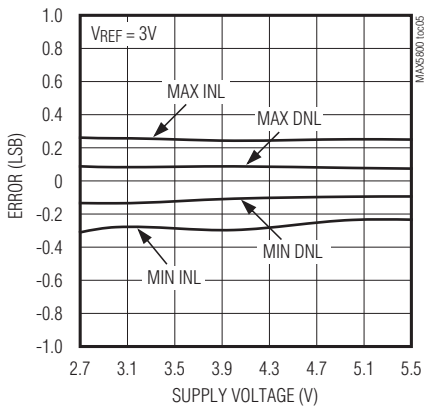

INL AND DNL vs. TEMPERATURE

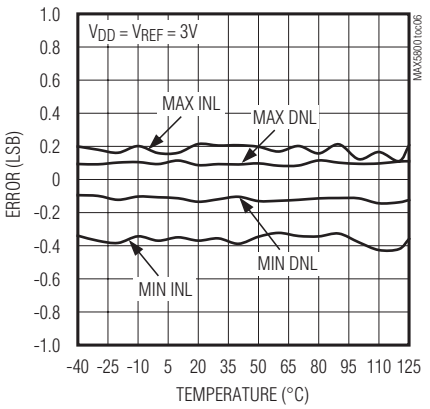

Ultra-Small, Dual-Channel, 8-/10-/12-Bit Buffered Output DACs with Internal Reference and I²C Interface

Typical Operating Characteristics (continued)

(MAX5802, 12-bit performance, T_A = +25°C, unless otherwise noted.)

OFFSET AND ZERO-SCALE ERROR vs. SUPPLY VOLTAGE

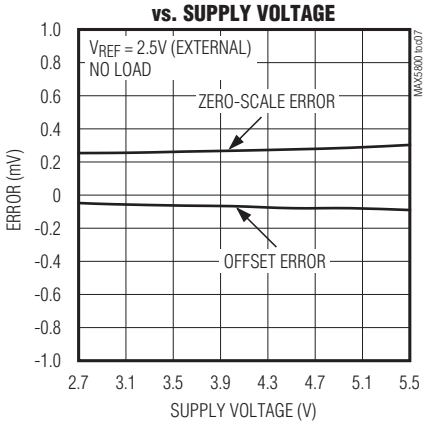

OFFSET AND ZERO-SCALE ERROR vs. TEMPERATURE

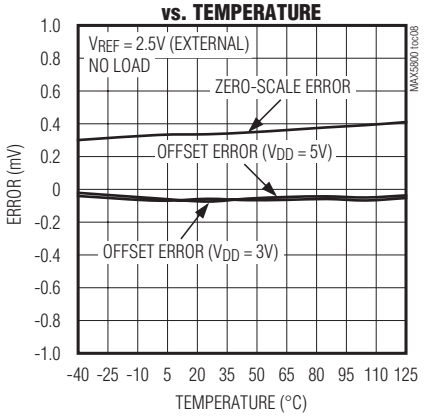

FULL-SCALE ERROR AND GAIN ERROR vs. SUPPLY VOLTAGE

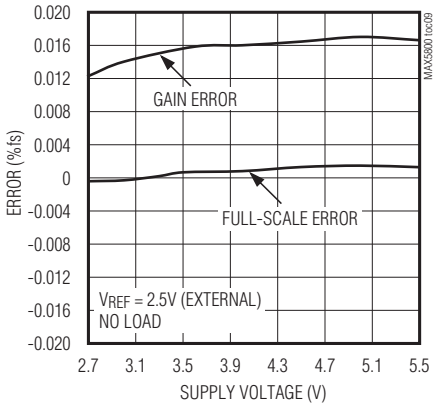

FULL-SCALE ERROR AND GAIN ERROR vs. TEMPERATURE

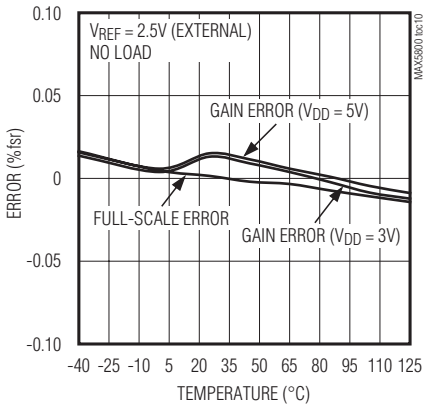

SUPPLY CURRENT vs. TEMPERATURE

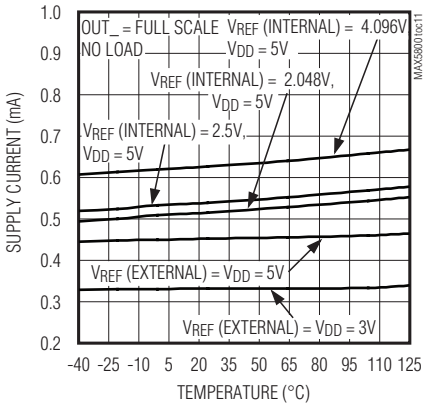

SUPPLY CURRENT vs. SUPPLY VOLTAGE

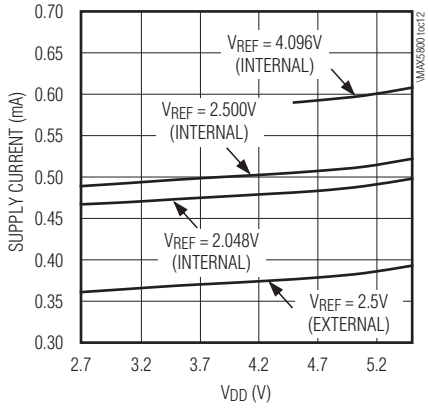

Typical Operating Characteristics (continued)

(MAX5802, 12-bit performance, T_A = +25°C, unless otherwise noted.)

POWER-DOWN MODE SUPPLY CURRENT vs. TEMPERATURE

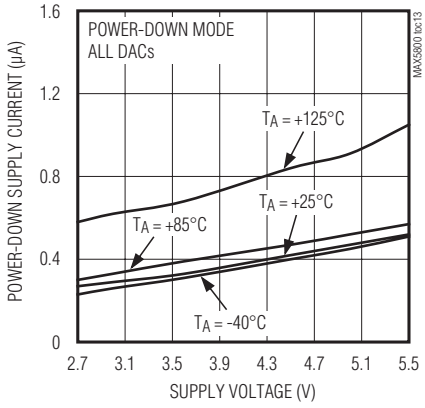

SUPPLY CURRENT vs. CODE

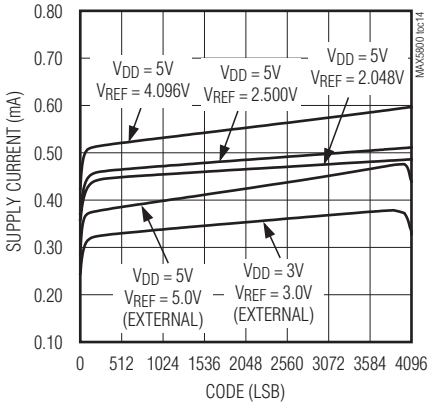

IREF (EXTERNAL) vs. CODE

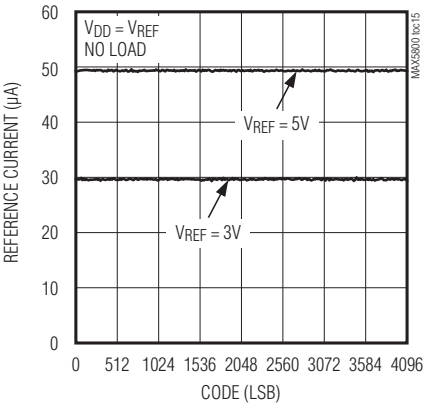

SETTLING TO ±1 LSB (VDD = VREF = 5V, RL = 2kΩ, CL = 200pF)

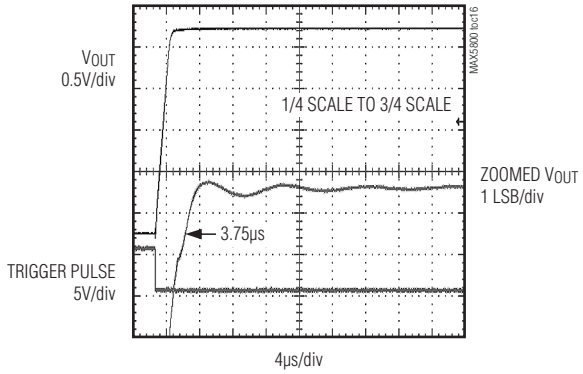

SETTLING TO ±1 LSB (VDD = VREF = 5V, RL = 2kΩ, CL = 200pF)

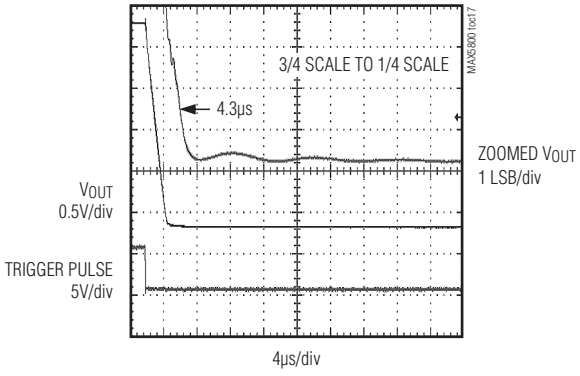

MAJOR CODE TRANSITION GLITCH ENERGY (VDD = VREF = 5V, RL = 2kΩ, CL = 200pF)

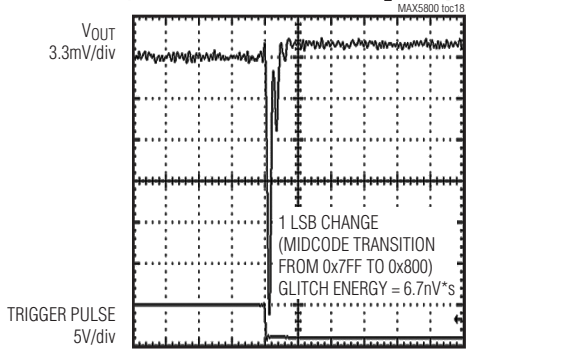

Ultra-Small, Dual-Channel, 8-/10-/12-Bit Buffered Output DACs with Internal Reference and I²C Interface

Typical Operating Characteristics (continued)

(MAX5802, 12-bit performance, T_A = +25°C, unless otherwise noted.)

MAJOR CODE TRANSITION GLITCH ENERGY
(V_{DD} = V_{REF} = 5V, R_L = 2kΩ, C_L = 200pF)

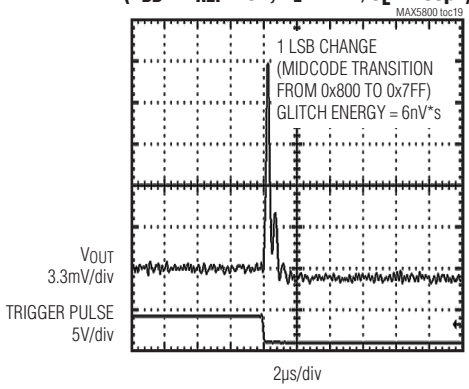

V_{OUT} vs. TIME TRANSIENT EXITING POWER-DOWN

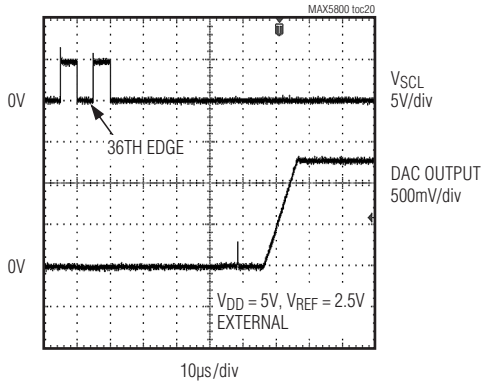

POWER-ON RESET TO 0V

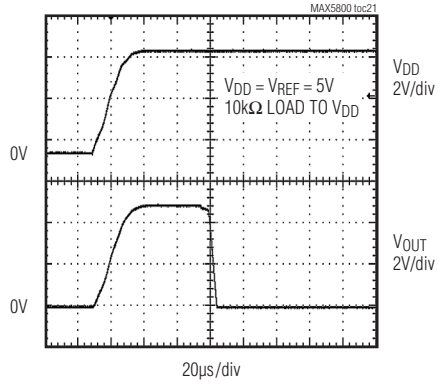

CHANNEL-TO-CHANNEL FEEDTHROUGH
(V_{DD} = V_{REF} = 5V, T_A = +25°C, R_L = 2kΩ, C_L = 200pF)

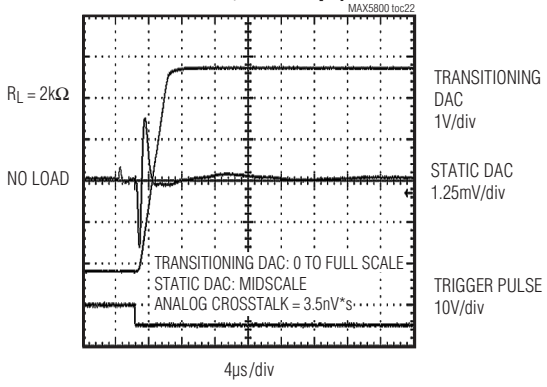

CHANNEL-TO-CHANNEL FEEDTHROUGH
(V_{DD} = V_{REF} = 5V, T_A = +25°C, NO LOAD)

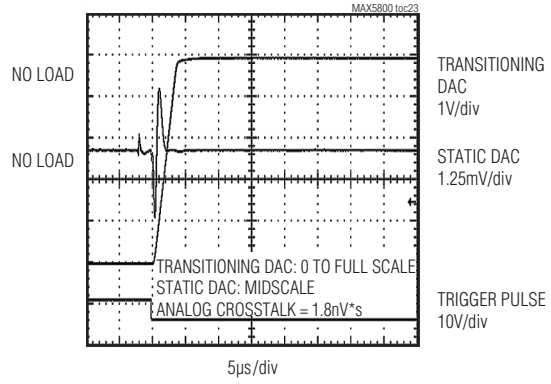

CHANNEL-TO-CHANNEL FEEDTHROUGH
(V_{DD} = 5V, V_{REF} = 4.096V (INTERNAL), T_A = +25°C, R_L = 2kΩ, C_L = 200pF)

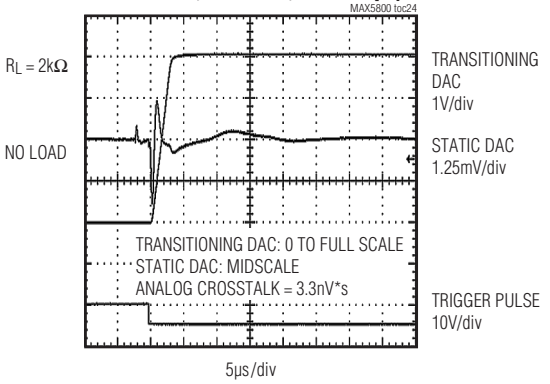

Ultra-Small, Dual-Channel, 8-/10-/12-Bit Buffered Output DACs with Internal Reference and I²C Interface

Typical Operating Characteristics (continued)

(MAX5802, 12-bit performance, T_A = +25°C, unless otherwise noted.)

CHANNEL-TO-CHANNEL FEEDTHROUGH (V_{DD} = 5V, V_{REF} = 4.096V (INTERNAL), T_A = +25°C, NO LOAD)

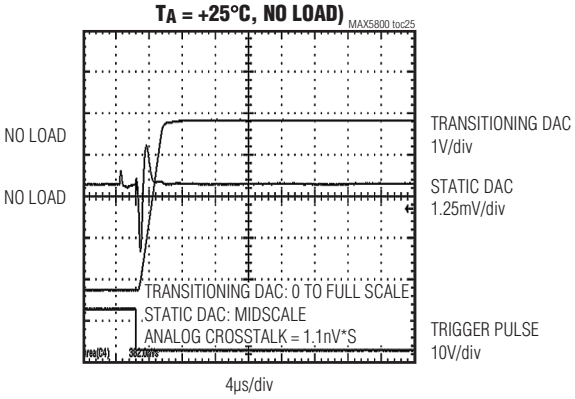

DIGITAL FEEDTHROUGH (V_{DD} = V_{REF} = 5V, R_L = 2kΩ, C_L = 200pF)

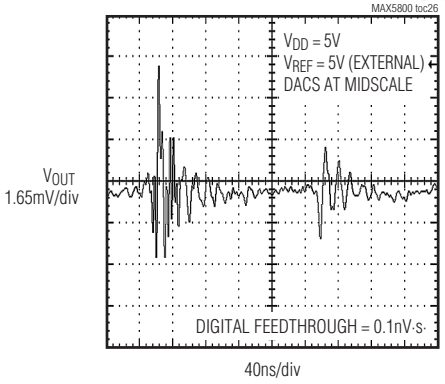

OUTPUT LOAD REGULATION

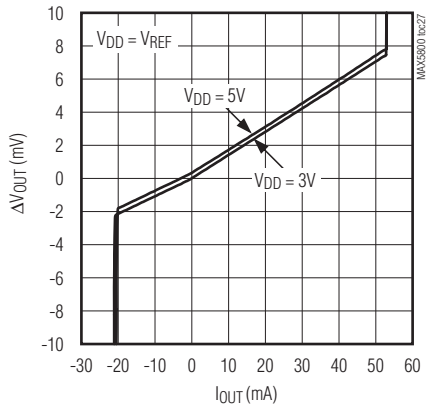

OUTPUT CURRENT LIMITING

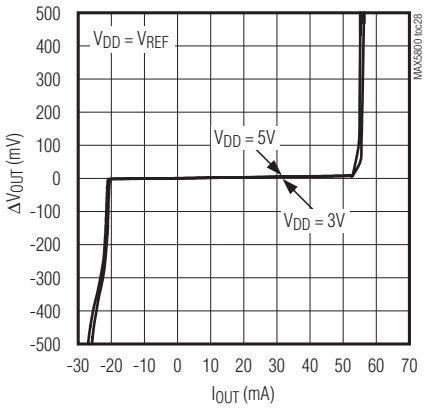

HEADROOM AT RAILS vs. OUTPUT CURRENT

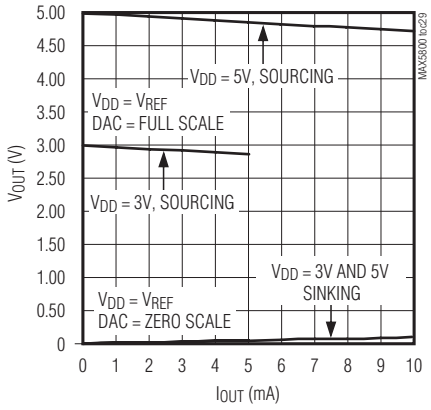

NOISE-VOLTAGE DENSITY VS. FREQUENCY (DAC AT MIDSCALE)

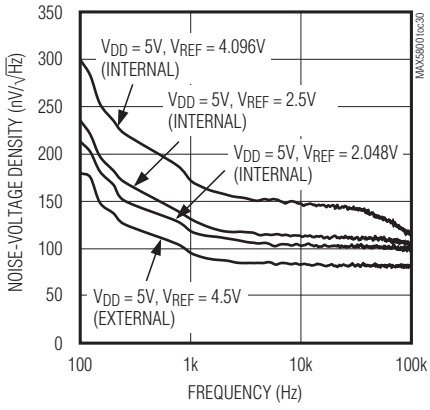

Ultra-Small, Dual-Channel, 8-/10-/12-Bit Buffered Output DACs with Internal Reference and I²C Interface

Typical Operating Characteristics (continued)

(MAX5802, 12-bit performance, T_A = +25°C, unless otherwise noted.)

0.1Hz TO 10Hz OUTPUT NOISE, EXTERNAL REFERENCE (V_{DD} = 5V, V_{REF} = 4.5V)

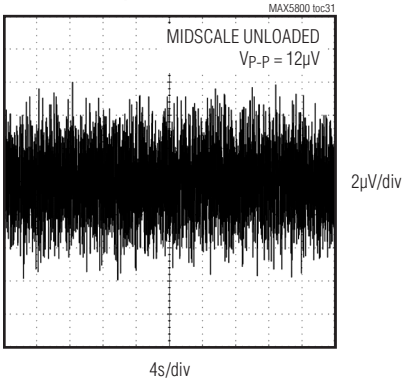

0.1Hz TO 10Hz OUTPUT NOISE, INTERNAL REFERENCE (V_{DD} = 5V, V_{REF} = 2.048V)

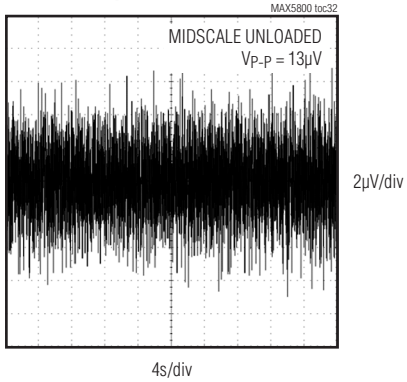

0.1Hz TO 10Hz OUTPUT NOISE, INTERNAL REFERENCE (V_{DD} = 5V, V_{REF} = 2.5V)

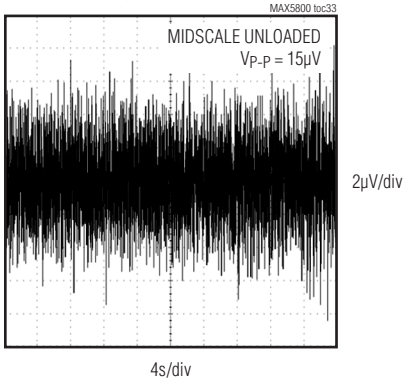

0.1Hz TO 10Hz OUTPUT NOISE, INTERNAL REFERENCE (V_{DD} = 5V, V_{REF} = 4.096V)

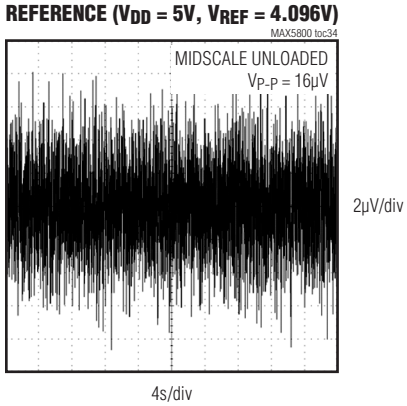

V_{REF} DRIFT vs. TEMPERATURE

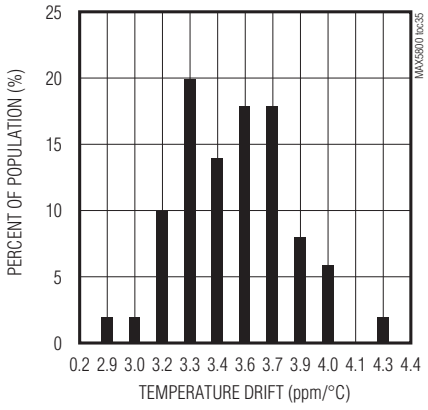

REFERENCE LOAD REGULATION

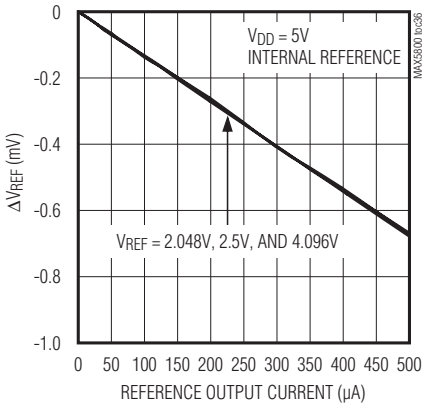

SUPPLY CURRENT vs. INPUT LOGIC VOLTAGE

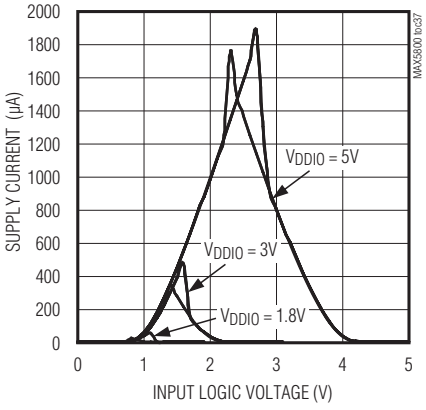

Ultra-Small, Dual-Channel, 8-/10-/12-Bit Buffered Output DACs with Internal Reference and I²C Interface

Pin Configurations

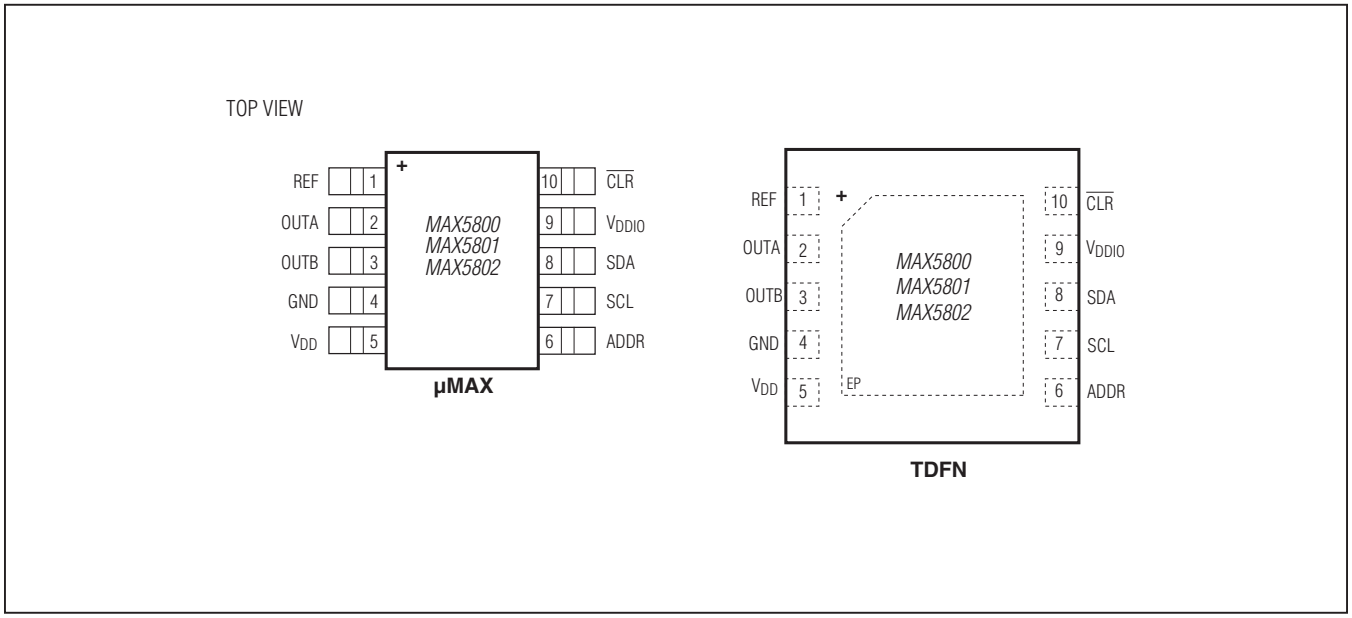

Pin Description

PIN	NAME	FUNCTION
1	REF	Reference Voltage Input/Output
2	OUTA	Buffered Channel A DAC Output
3	OUTB	Buffered Channel B DAC Output
4	GND	Ground
5	V_{DD}	Supply Voltage Input. Bypass V_{DD} with at least a 0.1µF capacitor to GND.
6	ADDR	I²C Interface Address Selection Bit
7	SCL	I²C Interface Clock Input
8	SDA	I²C Bidirectional Serial Data
9	V_{DDIO}	Digital Interface Power-Supply Input
10	$\overline{CLR}$	Active-Low Clear Input
—	EP	Exposed Pad (TDFN Only). Connect to ground.

Detailed Description

The MAX5800/MAX5801/MAX5802 are 2-channel, low-power, 8-/10-/12-bit buffered voltage-output DACs. The 2.7V to 5.5V wide supply voltage range and low-power consumption accommodates most low-power and low-voltage applications. The devices present a 100kΩ load to the external reference. The internal output buffers allow rail-to-rail operation. An internal voltage reference is available with software selectable options of 2.048V, 2.5V, or 4.096V. The devices feature a fast 400kHz I²C-compatible interface. The MAX5800/MAX5801/MAX5802 include a serial-in/parallel-out shift register, internal CODE and DAC registers, a power-on-reset (POR) circuit to initialize the DAC outputs to code zero, and control logic. $\overline{CLR}$ is available to asynchronously clear the device independent of the serial interface.

DAC Outputs (OUT_)

The MAX5800/MAX5801/MAX5802 include internal buffers on both DAC outputs. The internal output buffers provide improved load regulation for the DAC outputs. The output buffers slew at 1V/µs (typ) and drive up to 2kΩ in parallel with 500pF. The analog supply voltage (V_{DD}) determines the maximum output voltage range of the devices as V_{DD} powers the output buffer. Under no-load conditions, the output buffers drive from GND to V_{DD}, subject to offset and gain errors. With a 2kΩ load to GND, the output buffers drive from GND to within 200mV of V_{DD}. With a 2kΩ load to V_{DD}, the output buffers drive from V_{DD} to within 200mV of GND.

The DAC ideal output voltage is defined by:

$$V_{OUT} = V_{REF} \times \frac{D}{2^N}$$

where D = code loaded into the DAC register, V_{REF} = reference voltage, N = resolution.

Internal Register Structure

The user interface is separated from the DAC logic to minimize digital feedthrough. Within the serial interface is an input shift register, the contents of which can be routed to control registers, individual, or multiple DACs as determined by the user command.

Within each DAC channel there is a CODE register followed by a DAC latch register (see the *Detailed Functional Diagram*). The contents of the CODE register hold pending DAC output settings which can later be loaded into the DAC registers. The CODE register can be updated using both CODE and CODE_LOAD user commands. The contents of the DAC register hold the current DAC output settings. The DAC register can be updated directly from the serial interface using the CODE_LOAD commands or can upload the current contents of the CODE register using LOAD commands.

The contents of both CODE and DAC registers are maintained during power-down states, so that when the DACs are powered on, they return to their previously stored output settings. Any CODE or LOAD commands issued during power-down states continue to update the register contents. SW_CLEAR and SW_RESET commands reset the contents of all CODE and DAC registers to their zero-scale defaults.

Internal Reference

The MAX5800/MAX5801/MAX5802 include an internal precision voltage reference that is software selectable to be 2.048V, 2.500V, or 4.096V. When an internal reference is selected, that voltage is available on the REF pin for other external circuitry (see the Typical Operating Circuits) and can drive a 25kΩ load.

External Reference

The external reference input has a typical input impedance of 100kΩ and accepts an input voltage from +1.24V to V_{DD}. Connect an external voltage supply between REF and GND to apply an external reference. The MAX5800/MAX5801/MAX5802 power up and reset to external reference mode. Visit **www.maximintegrated.com/products/references** for a list of available external voltage-reference devices.

Clear Input ($\overline{CLR}$)

The MAX5800/MAX5801/MAX5802 feature an asynchronous active-low $\overline{CLR}$ logic input that simultaneously sets both DAC outputs to zero. Driving $\overline{CLR}$ low clears the contents of both the CODE and DAC registers and also aborts the on-going I²C command. To allow a new I²C command, drive $\overline{CLR}$ high, satisfying the t_{CLRSTA} timing requirement.

Interface Power Supply (V_{DDIO})

The MAX5800/MAX5801/MAX5802 feature a separate supply pin (V_{DDIO}) for the digital interface (1.8V to 5.5V). Connect V_{DDIO} to the I/O supply of the host processor.

I²C Serial Interface

The MAX5800/MAX5801/MAX5802 feature an I²C-/SMBus™-compatible, 2-wire serial interface consisting of a serial data line (SDA) and a serial clock line (SCL). SDA and SCL enable communication between the MAX5800/MAX5801/MAX5802 and the master at clock rates up to 400kHz. Figure 1 shows the 2-wire interface timing diagram. The master generates SCL and initiates data transfer on the bus. The master device writes data to the MAX5800/MAX5801/MAX5802 by transmitting the proper slave address followed by the command byte and then the data word. Each transmit sequence is framed by a START (S) or Repeated START (Sr) condition and a STOP (P) condition. Each word transmitted to the MAX5800/MAX5801/MAX5802 is 8 bits long and is followed by an acknowledge clock pulse. A master reading data from the MAX5800/MAX5801/MAX5802 must transmit the proper slave address followed by a series of nine SCL pulses for each byte of data requested. The MAX5800/MAX5801/MAX5802 transmit data on SDA in sync with the master-generated SCL pulses. The master acknowledges receipt of each byte of data. Each read sequence is framed by a START or Repeated START condition, a not acknowledge, and a STOP condition. SDA operates as both an input and an open-drain output. A pullup resistor, typically 4.7kΩ is required on SDA. SCL operates only as an input. A pullup resistor, typically 4.7kΩ, is required on SCL if there are multiple masters on the bus, or if the single master has an open-drain SCL output.

Series resistors in line with SDA and SCL are optional. Series resistors protect the digital inputs of the MAX5800/MAX5801/MAX5802 from high voltage spikes on the bus lines and minimize crosstalk and undershoot of the bus signals. The MAX5800/MAX5801/MAX5802 can accommodate bus voltages higher than V_{DDIO} up to a limit of 5.5V; bus voltages lower than V_{DDIO} are not recommended and may result in significantly increased interface currents. The MAX5800/MAX5801/MAX5802 digital inputs are double buffered. Depending on the command issued through the serial interface, the CODE register(s) can be loaded without affecting the DAC register(s) using the write command. To update the DAC registers, use the software LOAD command.

I²C START and STOP Conditions

SDA and SCL idle high when the bus is not in use. A master initiates communication by issuing a START condition. A START condition is a high-to-low transition on SDA with SCL high. A STOP condition is a low-to-high transition on SDA while SCL is high (Figure 2). A START condition from the master signals the beginning of a transmission to the MAX5800/MAX5801/MAX5802. The master terminates transmission and frees the bus, by issuing a STOP condition. The bus remains active if a Repeated START condition is generated instead of a STOP condition.

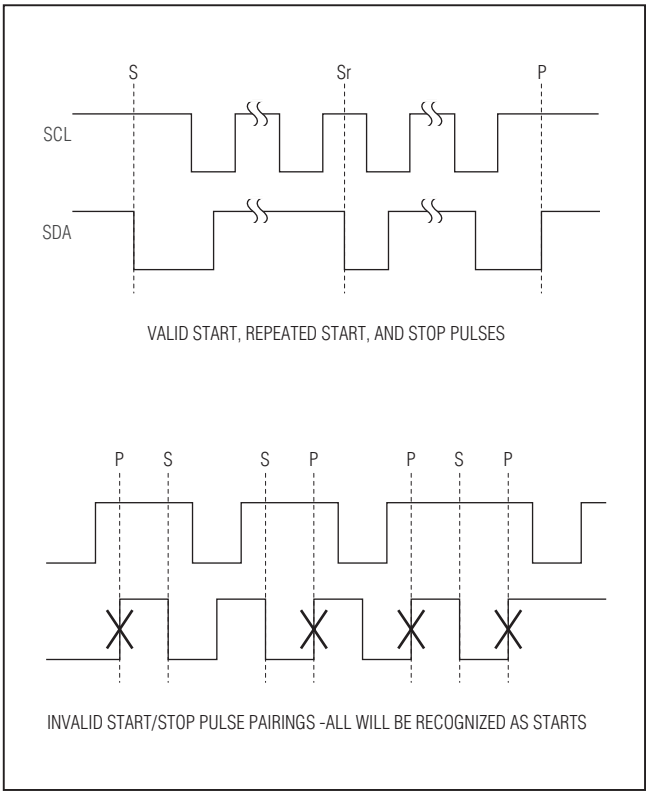

Figure 2. I²C START, Repeated START, and STOP Conditions

I²C Early STOP and Repeated START Conditions

The MAX5800/MAX5801/MAX5802 recognize a STOP condition at any point during data transmission except if the STOP condition occurs in the same high pulse as a START condition. Transmissions ending in an early STOP condition will not impact the internal device settings. If the STOP occurs during a readback byte, the transmission is terminated and a later read mode request will begin transfer of the requested register data from the beginning (this applies to combined format I²C read mode transfers only, interface verification mode transfers will be corrupted). See Figure 2.

SMBus is a trademark of Intel Corp.

Ultra-Small, Dual-Channel, 8-/10-/12-Bit Buffered Output DACs with Internal Reference and I²C Interface

I²C Slave Address

The slave address is defined as the seven most significant bits (MSBs) followed by the R/$\overline{W}$ bit. See Figure 4. The five most significant bits are 00011 with the 2 LSBs determined by ADDR as shown in Table 1. Setting the R/$\overline{W}$ bit to 1 configures the MAX5800/MAX5801/MAX5802 for read mode. Setting the R/$\overline{W}$ bit to 0 configures the MAX5800/MAX5801/MAX5802 for write mode. The slave address is the first byte of information sent to the MAX5800/MAX5801/MAX5802 after the START condition.

The MAX5800/MAX5801/MAX5802 have the ability to detect an unconnected state on the ADDR input for additional address flexibility; if leaving the ADDR input unconnected, be certain to minimize all loading on the pin (i.e. provide a landing for the pin, but do not allow any board traces).

I²C Broadcast Address

A broadcast address is provided for the purpose of updating or configuring all MAX5800/MAX5801/MAX5802 devices on a given I²C bus. All MAX5800/MAX5801/MAX5802 devices acknowledge and respond to the broadcast device address 00010000. The devices will respond to the broadcast address, regardless of the state of the address pins. The broadcast mode is intended for use in write mode only (as indicated by R/$\overline{W}$ = 0 in the address given).

I²C Acknowledge

In write mode, the acknowledge bit (ACK) is a clocked 9th bit that the MAX5800/MAX5801/MAX5802 use to handshake receipt of each byte of data as shown in Figure 3. The MAX5800/MAX5801/MAX5802 pull down SDA during the entire master-generated 9th clock pulse if the previous byte is successfully received. Monitoring ACK allows for detection of unsuccessful data transfers. An unsuccessful data transfer occurs if a receiving device is busy or if a system fault has occurred. In the event of an unsuccessful data transfer, the bus master will retry communication.

Table 1. I²C Slave Address LSBs

A[6:2] = 00011		
ADDR	**A1**	**A0**
V_{DDIO}	0	0
N.C.	1	0
GND	1	1

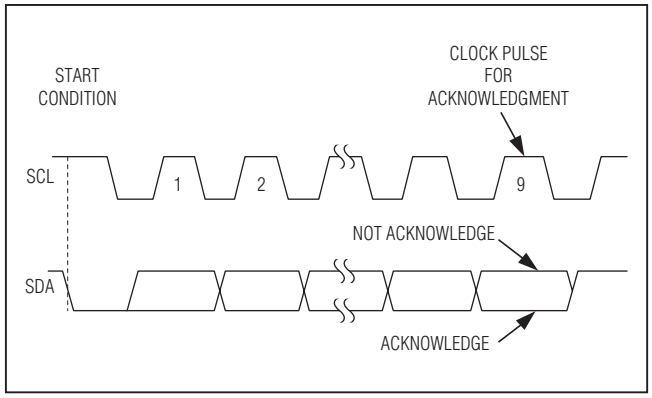

Figure 3. I²C Acknowledge

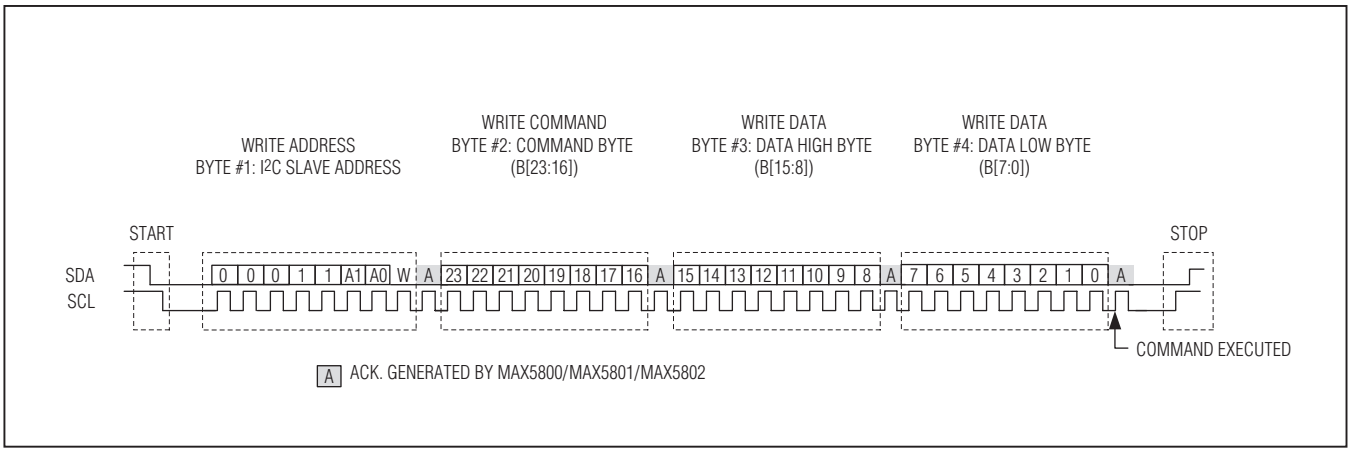

Figure 4. I²C Single Register Write Sequence

In read mode, the master pulls down SDA during the 9th clock cycle to acknowledge receipt of data from the MAX5800/MAX5801/MAX5802. An acknowledge is sent by the master after each read byte to allow data transfer to continue. A not-acknowledge is sent when the master reads the final byte of data from the MAX5800/MAX5801/MAX5802, followed by a STOP condition.

I²C Command Byte and Data Bytes

A command byte follows the slave address. A command byte is typically followed by two data bytes unless it is the last byte in the transmission. If data bytes follow the command byte, the command byte indicates the address of the register that is to receive the following two data bytes. The data bytes are stored in a temporary register and then transferred to the appropriate register during the ACK periods between bytes. This avoids any glitching or digital feedthrough to the DACs while the interface is active.

I²C Write Operations

A master device communicates with the MAX5800/MAX5801/MAX5802 by transmitting the proper slave address followed by command and data words. Each transmit sequence is framed by a START or Repeated START condition and a STOP condition as described above. Each word is 8 bits long and is always followed by an acknowledge clock (ACK) pulse as shown in the Figure 4 and Figure 5. The first byte contains the address of the MAX5800/MAX5801/MAX5802 with R/$\overline{W}$ = 0 to indicate a write. The second byte contains the register (or command) to be written and the third and fourth bytes contain the data to be written. By repeating the register address plus data pairs (Byte #2 through Byte #4 in Figure 4 and Figure 5), the user can perform multiple register writes using a single I²C command sequence. There is no limit as to how many registers the user can write with a single command. The MAX5800/MAX5801/MAX5802 support this capability for all user-accessible write mode commands.

Combined Format I²C Readback Operations

Each readback sequence is framed by a START or Repeated START condition and a STOP condition. Each word is 8 bits long and is followed by an acknowledge clock pulse as shown in Figure 6. The first byte contains the address of the MAX5800/MAX5801/MAX5802 with R/$\overline{W}$ = 0 to indicate a write. The second byte contains the register that is to be read back. There is a Repeated START condition, followed by the device address with R/$\overline{W}$ = 1 to indicate a read and an acknowledge clock. The master has control of the SCL line but the MAX5800/MAX5801/MAX5802 take over the SDA line. The final two bytes in the frame contain the register data readback followed by a STOP condition. If additional bytes beyond those required to readback the requested data are provided, the MAX5800/MAX5801/MAX5802 will continue to readback ones.

Readback of individual CODE registers is supported for the CODE command (B[23:20] = 0000). For this command, which supports a DAC address, the requested

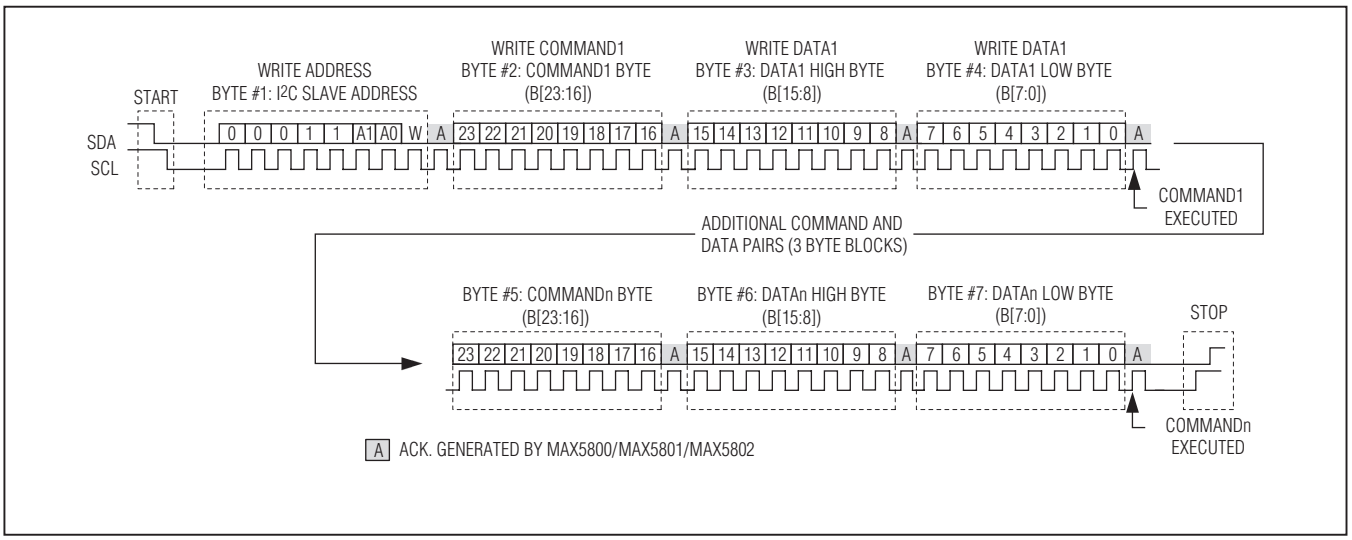

Figure 5. Multiple Register Write Sequence (Standard I²C Protocol)

channel CODE register content will be returned; if both DACs are selected, CODEA content will be returned.

Readback of individual DAC registers is supported for all LOAD commands (B[23:20] = 0001, 0010, or 0011). For these commands, which support a DAC address, the requested DAC register content will be returned. If both DACs are selected, DACA content will be returned.

Modified readback of the POWER register is supported for the POWER command (B[23:20] = 0100). The power status of each DAC is reported in locations B[1:0], with a 1 indicating the DAC is powered down and a 0 indicating the DAC is operational (see Table 2).

Readback of all other registers is not directly supported. All requests to read unsupported registers reads back the device's reference status and the device ID and revision information in the format as shown in Table 2.

Interface Verification I²C Readback Operations

While the MAX5800/MAX5801/MAX5802 support standard I²C readback of selected registers, it is also capable of functioning in an interface verification mode. This mode is accessed any time a readback operation follows an executed write mode command. In this mode, the last executed three-byte command is read back in its entirety. This behavior allows verification of the interface.

Sample command sequences are shown in Figure 7. The first command transfer is given in write mode with R/$\overline{W}$ = 0 and must be run to completion to qualify for interface verification readback. There is now a STOP/START pair or Repeated START condition required, followed by the readback transfer with R/$\overline{W}$ = 1 to indicate a read and an acknowledge clock from the MAX5800/MAX5801/MAX5802. The master still has control of the

Table 2. Standard I²C User Readback Data

COMMAND BYTE (REQUEST)								READBACK DATA HIGH BYTE								READBACK DATA LOW BYTE							
B23	B22	B21	B20	B19	B18	B17	B16	B15	B14	B13	B12	B11	B10	B9	B8	B7	B6	B5	B4	B3	B2	B1	B0
0	0	0	0	DAC selection				CODEn[11:4]								CODEn[3:0]				0	0	0	0
0	0	0	1	DAC selection				DACn[11:4]								DACn[3:0]				0	0	0	0
0	0	1	0	DAC selection				DACn[11:4]								DACn[3:0]				0	0	0	0
0	0	1	1	DAC selection				DACn[11:4]								DACn[3:0]				0	0	0	0
0	1	0	0	0	0	X	X	0	0	0	0	0	0	0	0	0	0	0	0	0	0	PWB	PWA
1	0	0	0	0	0	0	0	CODEA[11:4]								CODEA[3:0]				0	0	0	0
1	0	0	0	0	0	0	1	DACA[11:4]								DACA[3:0]				0	0	0	0
1	0	1	0	0	0	1	0	DACA[11:4]								DACA[3:0]				0	0	0	0
1	0	1	1	0	0	1	1	DACA[11:4]								DACA[3:0]				0	0	0	0
Any other command								1001 1000								000				REV_ID[2:0] (011)			REF MODE RF[1:0]

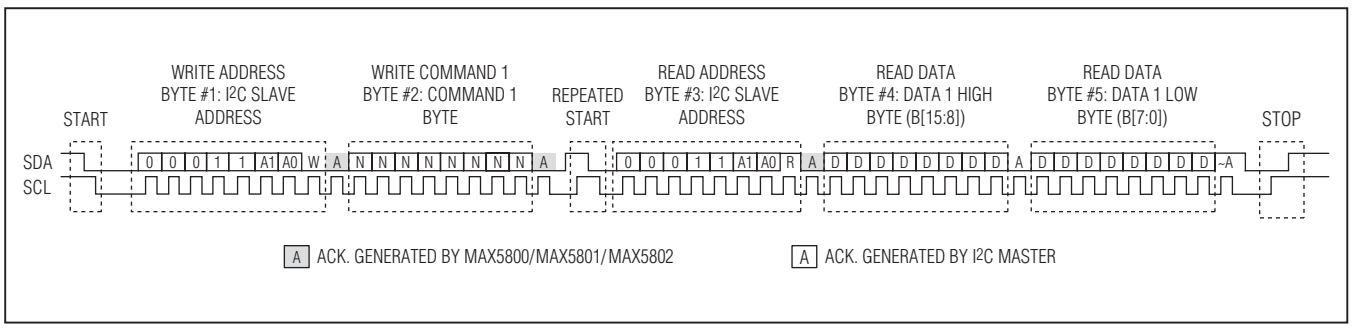

Figure 6. Standard I²C Register Read Sequence

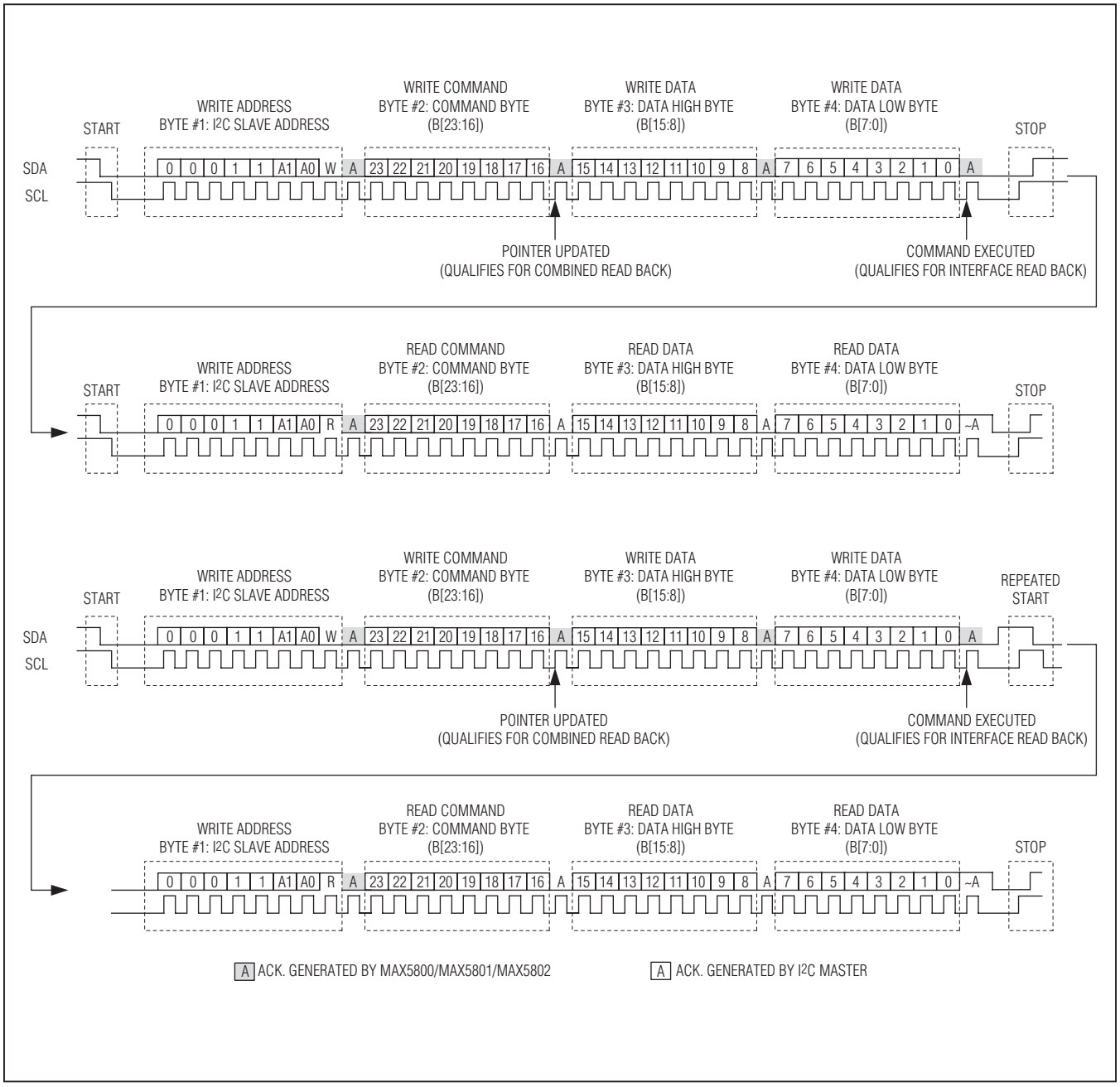

Figure 7. Interface Verification I²C Register Read Sequences

SCL line but the MAX5800/MAX5801/MAX5802 take over the SDA line. The final three bytes in the frame contain the command and register data written in the first transfer presented for readback, followed by a STOP condition. If additional bytes beyond those required to read back the requested data are provided, the MAX5800/MAX5801/MAX5802 will continue to read back ones.

It is not necessary for the write and read mode transfers to occur immediately in sequence. I²C transfers involving other devices do not impact the MAX5800/MAX5801/MAX5802 readback mode. Toggling between readback modes is based on the length of the preceding write mode transfer. Combined format I²C readback operation is resumed if a write command greater than two bytes but less than four bytes is supplied. For commands written using multiple register write sequences, only the last command executed is read back. For each command written, the readback sequence can only be completed one time; partial and/or multiple attempts to readback executed in succession will not yield usable data.

I²C Compatibility

The MAX5800/MAX5801/MAX5802 are fully compatible with existing I²C systems. SCL and SDA are high-impedance inputs; SDA has an open drain which pulls the data line low to transmit data or ACK pulses. Figure 8 shows a typical I²C application.

I²C User-Command Register Map

This section lists the user accessible commands and registers for the MAX5800/MAX5801/MAX5802. Each serial operation word is 24-bits long. The DAC data is left justified as shown in Table 3.

Table 4 provides detailed information about the Command Registers.

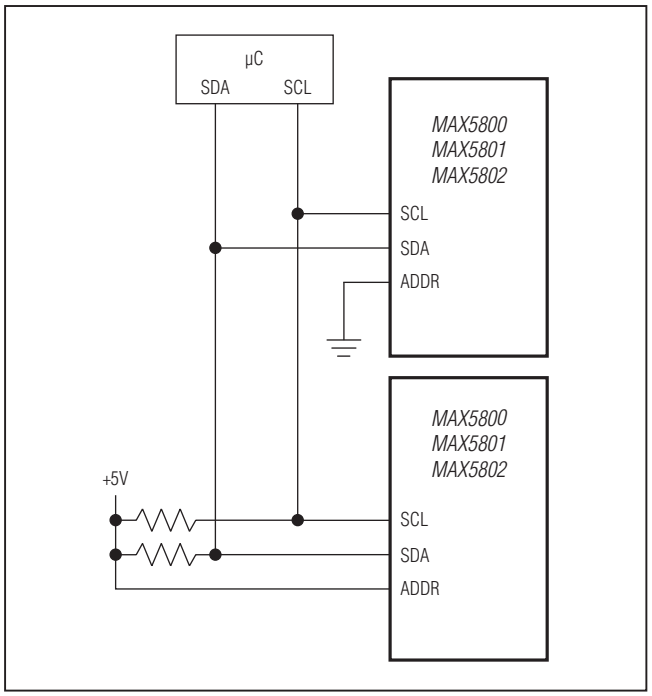

Figure 8. Typical I²C Application Circuit

Table 3. Format DAC Data Bit Positions

PART	B15	B14	B13	B12	B11	B10	B9	B8	B7	B6	B5	B4	B3	B2	B1	B0
MAX5800	D7	D6	D5	D4	D3	D2	D1	D0	X	X	X	X	X	X	X	X
MAX5801	D9	D8	D7	D6	D5	D4	D3	D2	D1	D0	X	X	X	X	X	X
MAX5802	D11	D10	D9	D8	D7	D6	D5	D4	D3	D2	D1	D0	X	X	X	X

Table 4. I²C Commands Summary

COMMAND	B23	B22	B21	B20	B19	B18	B17	B16	B15	B14	B13	B12	B11	B10	B9	B8	B7	B6	B5	B4	B3	B2	B1	B0	DESCRIPTION
DAC COMMANDS																									
CODEn	0	0	0	0	DAC SELECTION				CODE REGISTER DATA[11:4]								CODE REGISTER DATA[3:0]				X	X	X	X	Writes data to the selected CODE register(s)
LOADn	0	0	0	1	DAC SELECTION				X	X	X	X	X	X	X	X	X	X	X	X	X	X	X	X	Transfers data from the selected CODE register(s) to the selected DAC register(s)
CODEn_ LOAD_ALL	0	0	1	0	DAC SELECTION				CODE REGISTER DATA[11:4]								CODE REGISTER DATA[3:0]				X	X	X	X	Simultaneously writes data to the selected CODE register(s) while updating all DAC registers
CODEn_ LOADn	0	0	1	1	DAC SELECTION				CODE REGISTER DATA[11:4]								CODE REGISTER DATA[3:0]				X	X	X	X	Simultaneously writes data to the selected CODE register(s) while updating selected DAC register(s)
CONFIGURATION COMMANDS																									
POWER	0	1	0	0	0	0	Power Mode 00 = Normal 01 = PD 1kΩ 10 = PD 100kΩ 11 = PD Hi-Z		X	X	X	X	X	X	DACB	DACA	X	X	X	X	X	X	X	X	Sets the power mode of the selected DACs (DACs selected with a 1 in the corresponding DACn bit are updated, DACs with a 0 in the corresponding DACn bit are not impacted)
SW_CLEAR	0	1	0	1	0	0	0	0	X	X	X	X	X	X	X	X	X	X	X	X	X	X	X	X	Executes a software clear (all CODE and DAC registers cleared to their default values)
SW_RESET	0	1	0	1	0	0	0	1	X	X	X	X	X	X	X	X	X	X	X	X	X	X	X	X	Executes a software reset (all CODE, DAC, and control registers returned to their default values)

Table 4. I²C Commands Summary (continued)

COMMAND	B23	B22	B21	B20	B19	B18	B17	B16	B15	B14	B13	B12	B11	B10	B9	B8	B7	B6	B5	B4	B3	B2	B1	B0	DESCRIPTION
CONFIG	0	1	1	0	0	0	0	$\overline{LD_EN}$	X	X	X	X	X	X	DAC B	DAC A	X	X	X	X	X	X	X	X	Sets the DAC Latch Mode of the selected DACs. Only DACS with a 1 in the selection bit are updated by the command. $\overline{LD_EN}$ = 0: DAC latch is operational (LOAD controlled) $\overline{LD_EN}$ = 1: DAC latch is transparent
REF	0	1	1	1	0	REF Power 0= DAC 1= ON	REF Mode 00 = EXT 01 = 2.5V 10 = 2.0V 11 = 4.1V		X	X	X	X	X	X	X	X	X	X	X	X	X	X	X	X	Sets the reference operating mode. REF Power (B18): 0 = Internal reference is only powered if at least one DAC is powered 1 = Internal reference is always powered
ALL DAC COMMANDS																									
CODE_ALL	1	0	0	0	0	0	0	0	CODE REGISTER DATA[11:4]								CODE REGISTER DATA[3:0]				X	X	X	X	Writes data to all CODE registers
LOAD_ALL	1	0	0	0	0	0	0	1	X	X	X	X	X	X	X	X	X	X	X	X	X	X	X	X	Updates all DAC latches with current CODE register data
CODE_ ALL_ LOAD_ALL	1	0	0	0	0	0	1	X	CODE REGISTER DATA[11:4]								CODE REGISTER DATA[3:0]				X	X	X	X	Simultaneously writes data to all CODE registers while updating all DAC registers
NO OPERATION COMMANDS																									
No Operation	1	0	0	1	X	X	X	X	X	X	X	X	X	X	X	X	X	X	X	X	X	X	X	X	These commands will have no effect on the device
	1	0	1	X	X	X	X	X	X	X	X	X	X	X	X	X	X	X	X	X	X	X	X	X	
	1	1	X	X	X	X	X	X	X	X	X	X	X	X	X	X	X	X	X	X	X	X	X	X	
Reserved Commands: Any commands not specifically listed above are reserved for Maxim internal use only.																									

CODEn Command

The CODEn command (B[23:20] = 0000) updates the CODE register contents for the selected DAC(s). Changes to the CODE register content based on this command will not affect DAC outputs directly unless the DAC latch has been configured to be transparent. Issuing the CODEn command with DAC SELECTION = ALL DACs is equivalent to CODE_ALL (B[23:16] = 10000000). See Table 4 and Table 5.

LOADn Command

The LOADn command (B[23:20] = 0001) updates the DAC register content for the selected DAC(s) by uploading the current contents of the CODE register. The LOADn command can be used with DAC SELECTION = ALL DACs to issue a software load for both DACs, which is equivalent to the LOAD_ALL (B[23:16] = 10000001) command. See Table 4 and Table 5.

CODEn_LOAD_ALL Command

The CODEn_LOAD_ALL command (B[23:20] = 0010) updates the CODE register contents for the selected DAC(s) as well as the DAC register content of both DACs. Channels for which the CODE register content has not been modified since the last load to DAC register operation will not be updated to reduce digital crosstalk. Issuing this command with DAC_ADDRESS = ALL is equivalent to the CODE_ALL_LOAD_ALL command. The CODEn_LOAD_ALL command by definition will modify at least one CODE register. To avoid this, use the LOADn command with DAC SELECTION = ALL DACs or use the LOAD_ALL command. See Table 4 and Table 5.

CODEn_LOADn Command

The CODEn_LOADn command (B[23:20] = 0011) updates the CODE register contents for the selected DAC(s) as well as the DAC register content of the selected DAC(s). Channels for which the CODE register content has not been modified since the last load to DAC register operation will not be updated to reduce digital crosstalk. Issuing this command with DAC SELECTION = ALL DACs is equivalent to the CODE_ALL_LOAD_ALL command. See Table 4 and Table 5.

CODE_ALL Command

The CODE_ALL command (B[23:16] = 10000000) updates the CODE register contents for both DACs. See Table 4.

LOAD_ALL Command

The LOAD_ALL command (B[23:16] = 10000001) updates the DAC register content for both DACs by uploading the current contents of the CODE registers. See Table 4.

CODE_ALL_LOAD_ALL Command

The CODE_ALL_LOAD_ALL command (B[23:16] = 1000001x) updates the CODE register contents for both DACs as well as the DAC register content of both DACs. See Table 4

Table 5. DAC Selection

B19	B18	B17	B16	DAC SELECTED
0	0	0	0	DAC A
0	0	0	1	DAC B
0	0	1	X	No effect
X	1	X	X	ALL DACs
1	X	X	X	ALL DACs

POWER Command

The MAX5800/MAX5801/MAX5802 feature a software-controlled power-mode (POWER) command (B[23:18] = 010000). The POWER command updates the power-mode settings of the selected DACs while the power settings of the rest of the DACs remain unchanged. The new power setting is determined by bits B[17:16] while the affected DAC(s) are selected by bits B[9:8]. If all DACs are powered down, the device enters a STANDBY mode.

In power-down, the DAC output is disconnected from the buffer and is grounded with either one of the two selectable internal resistors or set to high impedance. See Table 7 for the selectable internal resistor values in power-down mode. In power-down mode, the DAC register retains its value so that the output is restored when the device powers up. The serial interface remains active in power-down mode.

In STANDBY mode, the internal reference can be powered down or it can be set to remain powered-on for external use. Also, in STANDBY mode, devices using the external reference do not load the REF pin. See Table 6.

SW_RESET and SW_CLEAR Command

The SW_RESET (B[23:16] = 01010001) and SW_CLEAR (B[23:16] = 01010000) commands provide a means of issuing a software reset or software clear operation. Use SW_CLEAR to issue a software clear operation to return all CODE and DAC registers to the zero-scale value. Use SW_RESET to reset all CODE, DAC, and configuration registers to their default values.

Table 6. POWER Command Format

B23	B22	B21	B20	B19	B18	B17	B16	B15	B14	B13	B12	B11	B10	B9	B8	B7	B6	B5	B4	B3	B2	B1	B0
0	1	0	0	0	0	PD1	PD0	X	X	X	X	X	X	B	A	X	X	X	X	X	X	X	X
POWER Command						Power Mode: 00 = Normal 01 = 1kΩ 10 = 100kΩ 11 = Hi-Z		Don't Care						DAC Select: 1 = DAC Selected 0 = DAC Not Selected		Don't Care							
Default Values (all DACs) →						0	0	X	X	X	X	X	X	1	1	X	X	X	X	X	X	X	X

Table 7. Selectable DAC Output Impedance in Power-Down Mode

PD1 (B17)	PD0 (B16)	OPERATING MODE
0	0	Normal operation
0	1	Power-down with internal 1kΩ pulldown resistor to GND.
1	0	Power-down with internal 100kΩ pulldown resistor to GND.
1	1	Power-down with high-impedance output.

CONFIG Command

The CONFIG command (B[23:17] = 0110000) updates the LOAD functions of selected DACs. Issue the command with B16 = 0 to allow the DAC latches to operate normally or with B16 = 1 to disable the DAC latches, making them perpetually transparent. Mode settings of the selected DACs are updated while the mode settings of the rest of the DACs remain unchanged; DAC(s) are selected by bits B[9:8]. See Table 8.

REF Command

The REF command (B[23:19] = 01110) updates the global reference setting used for both DAC channels. Set B[17:16] = 00 to use an external reference for the DACs or set B[17:16] to 01, 10, or 11 to select either the 2.5V, 2.048V, or 4.096V internal reference, respectively.

If RF2 (B18) is set to zero (default) in the REF command, the reference will be powered down any time both DAC channels are powered down (in STANDBY mode). If RF2 (B18 = 1) is set to one, the reference will remain powered even if both DAC channels are powered down, allowing continued operation of external circuitry. In this mode, the 1µA shutdown state is not available. See Table 9.

Table 8. CONFIG Command Format

B23	B22	B21	B20	B19	B18	B17	B16	B15	B14	B13	B12	B11	B10	B9	B8	B7	B6	B5	B4	B3	B2	B1	B0
0	1	1	0	0	0	0	LDB	X	X	X	X	X	X	B	A	X	X	X	X	X	X	X	X
CONFIG Command							0 = Normal 1 = Transparent	Don't Care						DAC Select: 1 = DAC Selected 0 = DAC Not Selected		Don't Care							
Default Values (all DACs) →							0	X	X	X	X	X	X	1	1	X	X	X	X	X	X	X	X

Table 9. REF Command Format

B23	B22	B21	B20	B19	B18	B17	B16	B15	B14	B13	B12	B11	B10	B9	B8	B7	B6	B5	B4	B3	B2	B1	B0
0	1	1	1	0	RF2	RF1	RF0	X	X	X	X	X	X	X	X	X	X	X	X	X	X	X	X
REF Command					0 = Off in Standby 1 = On in Standby	REF Mode: 00 = EXT 01 = 2.5V 10 = 2.0V 11 = 4.0V		Don't Care								Don't Care							
Default Values →					0	0	0	X	X	X	X	X	X	X	X	X	X	X	X	X	X	X	X

Applications Information

Power-On Reset (POR)

When power is applied to V_{DD} and V_{DDIO}, the DAC output is set to zero scale. To optimize DAC linearity, wait until the supplies have settled and the internal setup and calibration sequence completes (200µs, typ).

Power Supplies and Bypassing Considerations

Bypass V_{DD} and V_{DDIO} with high-quality ceramic capacitors to a low-impedance ground as close as possible to the device. Minimize lead lengths to reduce lead inductance. Connect the GND to the analog ground plane.

Layout Considerations

Digital and AC transient signals on GND can create noise at the output. Connect GND to form the star ground for the DAC system. Refer remote DAC loads to this system ground for the best possible performance. Use proper grounding techniques, such as a multilayer board with a low-inductance ground plane, or star connect all ground return paths back to the MAX5800/MAX5801/MAX5802 GND. Carefully layout the traces between channels to reduce AC cross-coupling. Do not use wire-wrapped boards and sockets. Use shielding to minimize noise immunity. Do not run analog and digital signals parallel to one another, especially clock signals. Avoid routing digital lines underneath the MAX5800/MAX5801/MAX5802 package.

Definitions

Integral Nonlinearity (INL)

INL is the deviation of the measured transfer function from a straight line drawn between two codes once offset and gain errors have been nullified.

Differential Nonlinearity (DNL)

DNL is the difference between an actual step height and the ideal value of 1 LSB. If the magnitude of the DNL ≤ 1 LSB, the DAC guarantees no missing codes and is monotonic. If the magnitude of the DNL ≥ 1 LSB, the DAC output may still be monotonic.

Offset Error

Offset error indicates how well the actual transfer function matches the ideal transfer function. The offset error is calculated from two measurements near zero code and near maximum code.

Gain Error

Gain error is the difference between the ideal and the actual full-scale output voltage on the transfer curve, after nullifying the offset error. This error alters the slope of the transfer function and corresponds to the same percentage error in each step.

Zero-Scale Error

Zero-scale error is the difference between the DAC output voltage when set to code zero and ground. This includes offset and other die level nonidealities.

Full-Scale Error

Full-scale error is the difference between the DAC output voltage when set to full scale and the reference voltage. This includes offset, gain error, and other die level nonidealities.

Settling Time

The settling time is the amount of time required from the start of a transition, until the DAC output settles to the new output value within the converter's specified accuracy.

Digital Feedthrough

Digital feedthrough is the amount of noise that appears on the DAC output when the DAC digital control lines are toggled.

Digital-to-Analog Glitch Impulse

A major carry transition occurs at the midscale point where the MSB changes from low to high and all other bits change from high to low, or where the MSB changes from high to low and all other bits change from low to high. The duration of the magnitude of the switching glitch during a major carry transition is referred to as the digital-to-analog glitch impulse.

The digital-to-analog power-up glitch is the duration of the magnitude of the switching glitch that occurs as the device exits power-down mode.

Ultra-Small, Dual-Channel, 8-/10-/12-Bit Buffered Output DACs with Internal Reference and I²C Interface

Detailed Functional Diagram

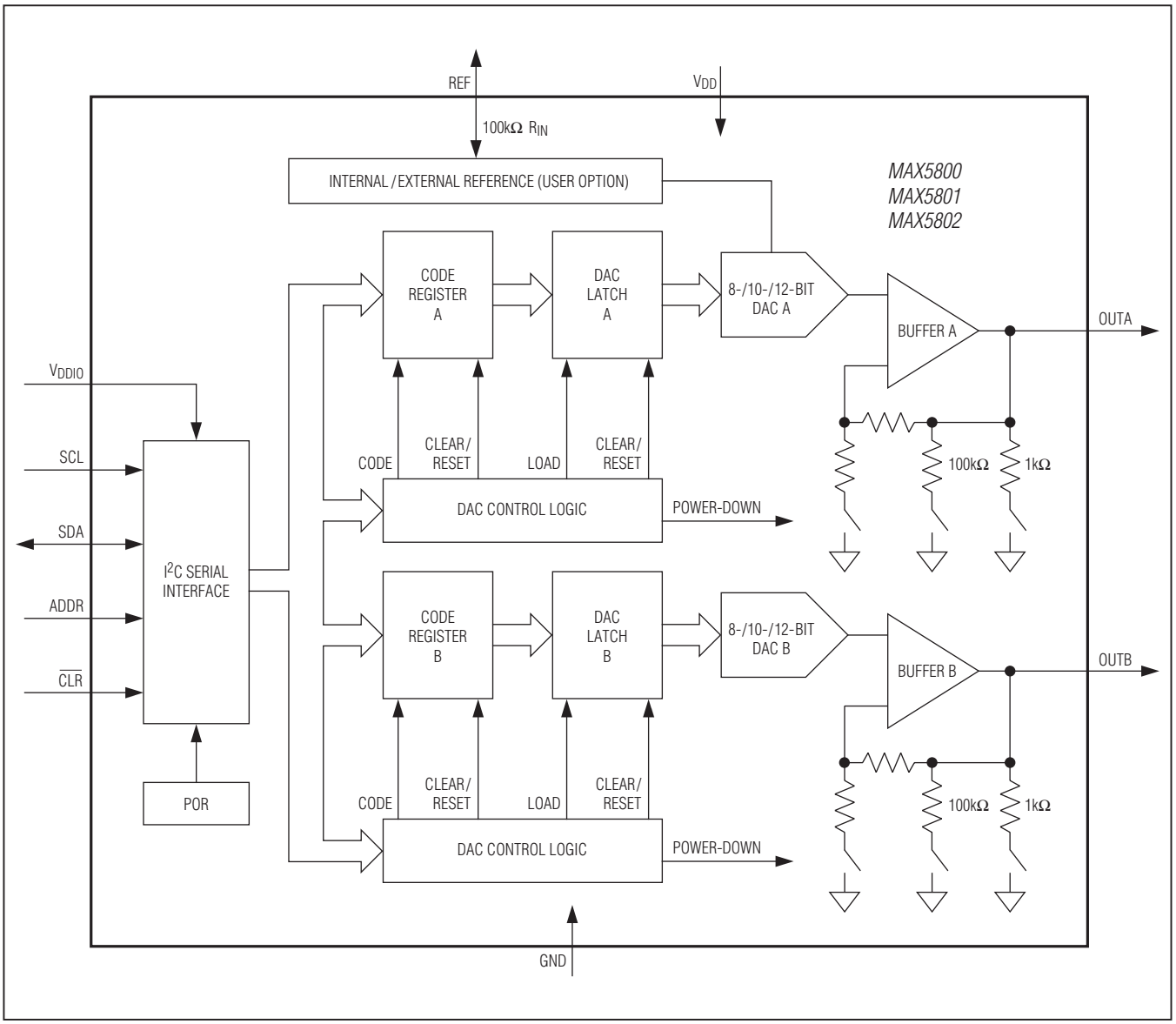

Ultra-Small, Dual-Channel, 8-/10-/12-Bit Buffered Output DACs with Internal Reference and I²C Interface

Typical Operating Circuits

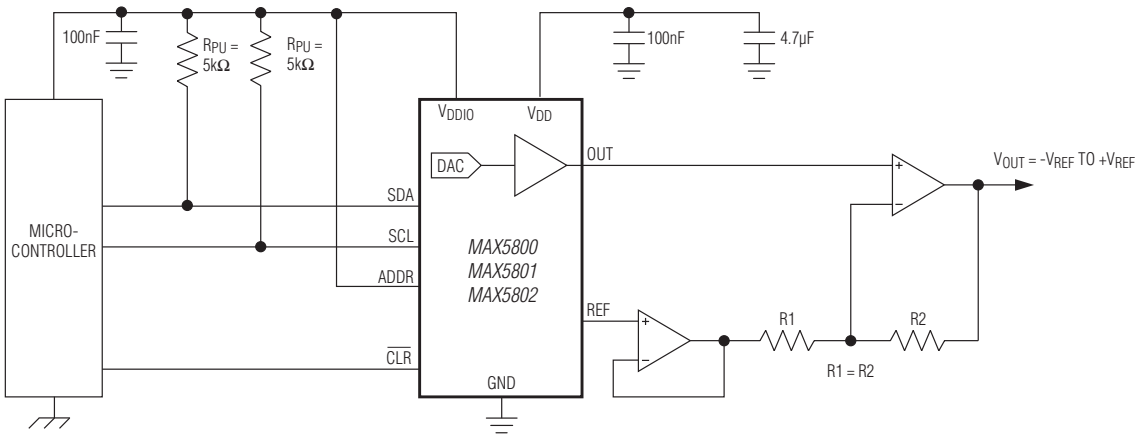

NOTE: BIPOLAR OPERATION (ONE CHANNEL SHOWN)

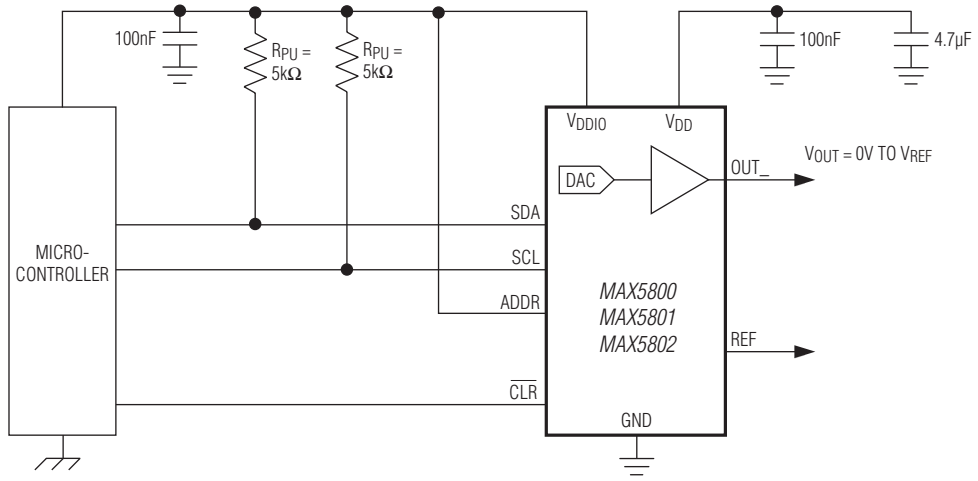

NOTE: UNIPOLAR OPERATION (ONE CHANNEL SHOWN)

Ultra-Small, Dual-Channel, 8-/10-/12-Bit Buffered Output DACs with Internal Reference and I²C Interface

Ordering Information

PART	PIN-PACKAGE	RESOLUTION (BIT)	INTERNAL REFERENCE TEMPCO (ppm/°C)
MAX5800ATB+T*	10 TDFN-EP**	8	10 (typ), 25 (max)
MAX5800AUB+T*	10 µMAX	8	10 (typ), 25 (max)
MAX5801ATB+T*	10 TDFN-EP**	10	10 (typ), 25 (max)
MAX5801AUB+T*	10 µMAX	10	10 (typ), 25 (max)
MAX5802AATB+T*	10 TDFN-EP**	12	3 (typ), 10 (max)
MAX5802AAUB+T	10 µMAX	12	3 (typ), 10 (max)
MAX5802BATB+T*	10 TDFN-EP**	12	10 (typ), 25 (max)
MAX5802BAUB+T*	10 µMAX	12	10 (typ), 25 (max)

Note: *All devices are specified over the -40°C to +125°C temperature range.*
+Denotes a lead(Pb)-free/RoHS-compliant package.
T = Tape and reel.
**Future product—Contact factory for availability.*
***EP = Exposed pad.*

Chip Information

PROCESS: BiCMOS

Package Information

For the latest package outline information and land patterns (footprints), go to **www.maximintegrated.com/packages**. Note that a "+", "#", or "-" in the package code indicates RoHS status only. Package drawings may show a different suffix character, but the drawing pertains to the package regardless of RoHS status.

PACKAGE TYPE	PACKAGE CODE	OUTLINE NO.	LAND PATTERN NO.
10 µMAX	U10+2	21-0061	90-0330
10 TDFN-EP	T1033+1	21-0137	90-0003

Ultra-Small, Dual-Channel, 8-/10-/12-Bit Buffered Output DACs with Internal Reference and I²C Interface

Revision History

REVISION NUMBER	REVISION DATE	DESCRIPTION	PAGES CHANGED
0	9/12	Initial release	—

Maxim cannot assume responsibility for use of any circuitry other than circuitry entirely embodied in a Maxim product. No circuit patent licenses are implied. Maxim reserves the right to change the circuitry and specifications without notice at any time. The parametric values (min and max limits) shown in the Electrical Characteristics table are guaranteed. Other parametric values quoted in this data sheet are provided for guidance.

© 2012 Maxim Integrated The Maxim logo and Maxim Integrated are trademarks of Maxim Integrated Products, Inc.