19-1318; Rev 0; 2/89

MAXIM

Dual CMOS Video Amplifier

General Description

The MAX457 contains two unity-gain stable video amplifiers that are capable of driving 75Ω loads with a -3dB bandwidth of 70MHz. The amplifiers operate from ±5V supplies and together consume about 350mW of power. Closed loop gain is set by two external resistors. The pinout of the MAX457 follows that of conventional 8-pin, dual op amps.

The amplifiers require no external compensation and because of the CMOS process offer low input bias current of typically 100pA. The isolation between the amplifiers is typically 72dB at 5MHz and differential phase and gain are 0.2 degrees and 0.5% respectively.

Features

- **Unity-Gain Bandwidth of 70MHz**
- **Low Input Capacitance: 4pF**
- **No Frequency Compensation Required**
- **Low Input Bias Current: 100pA**
- **Directly Drives 75Ω Cables**
- **High Isolation Between Amplifiers: 72dB at 5MHz**
- **Low Offset Voltage: 2mV**

Applications

75Ω Cable Drivers

Output Amplifiers for Video Crosspoint Switches

High Speed, Low Gain Applications

Driving Flash Converters

Video Distribution Amplifiers

Ordering Information

PART	TEMP. RANGE	PACKAGE
MAX457CPA	0°C to +70°C	8 Lead Plastic DIP
MAX457CSA	0°C to +70°C	8 Lead SO
MAX457C/D	0°C to +70°C	Dice
MAX457EPA	-40°C to +85°C	8 Lead Plastic DIP
MAX457EJA	-40°C to +85°C	8 Lead CERDIP

Typical Operating Circuit

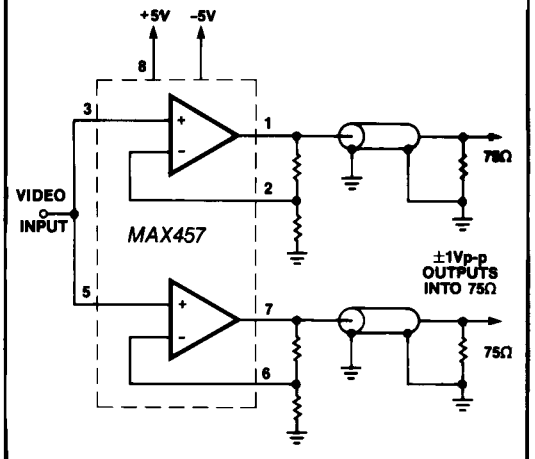

MAX457 Dual Video 70MHz Distribution Amplifier

Pin Configuration

Top View

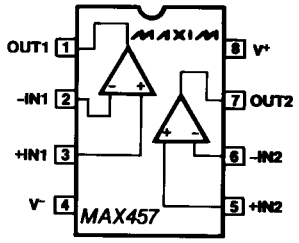

For free samples & the latest literature: http://www.maxim-ic.com, or phone 1-800-998-8800

Dual CMOS Video Amplifier

ABSOLUTE MAXIMUM RATINGS

Total Supply Voltage (V^+ to V^-) 12V
Analog Input Voltage ..... (V^+ +0.3V) to (V^- -0.3V)
Storage Temperature Range ..... -65°C to +150°C
Operating Temperature Range
MAX457CPA, MAX457CSA,
MAX457C/D ..... 0°C to +70°C
MAX457EPA, MAX457EJA ..... -40°C to +85°C
Lead temperature (Soldering 10 sec) ..... +300°C
Duration of Output Short Circuit to Ground ... Indefinite
Input Current, power on or off ..... ±50mA
Continuous Total Power Dissipation at 70°C
Plastic DIP (derate 8.3mW/°C above 70°C) 660mW
CERDIP (derate 8.0mW/°C above 70°C) 640mW
Small Outline (derate 5.9mW/°C above 70°C) ... 470mW

Stresses above those listed under "Absolute Maximum Ratings" may cause permanent damage to the device. These are stress ratings only, and functional operation of the device at these or any other conditions above those indicated in the operational sections of the specification is not implied. Exposure to absolute maximum rating conditions for extended periods may affect device reliability.

ELECTRICAL CHARACTERISTICS

(V^+ = +5V, V^- = -5V, -2V ≤ V_{IN} ≤ +2V, Output Load Resistor = 150Ω, T_A = +25°C, unless otherwise noted.)

PARAMETER	SYMBOL	CONDITIONS	MIN	TYP	MAX	UNITS
Input Voltage Range	V_{IN}	Over Temperature Range	-2		+2	V
Input Offset Voltage	V_{OS}		-5	±2	+5	mV
Offset Voltage Drift	dV_{OS}/dT			20	100	µV/°C
Input Bias Current	I_B	T_A = +25°C T_A = +70°C T_A = +85°C		0.1 5 15	1 40 100	nA
Input Resistance	R_{IN}	T_A = +25°C		10		GΩ
Input Capacitance	C_{IN}	Plastic Package		4		pF
Open Loop Voltage Gain	A_{VOL}	R_L = 1000Ω R_L = 150Ω R_L = 75Ω	200 45 25	300 65 35		V/V
Open Loop Gain Drift Temperature Coefficient	dA_{VOL}/dT	R_L = 150Ω		-0.6		%/°C
Common Mode Rejection Ratio	CMRR	-2V ≤ V_{IN} ≤ +2V	54	66		dB
Power Supply Rejection Ratio	PSRR	±4.5V to ±5.5V	54	66		dB
Slew Rate	SR	(Note 1)	150	300		V/µs
-3dB Bandwidth	GBW1	A_V = 0dB, R_L = 75Ω (Note 1)	50	70		MHz
-3dB Bandwidth	GBW2	A_V = 6dB, R_L = 150Ω (Note 1)	35	50		MHz
Differential Phase Error	DP	(Notes 1, 2)		0.2		deg
Differential Gain Error	DG	(Notes 1, 2)		0.5		%
Settling Time to 1%	t_S	R_L = 150Ω, A_V = 6dB		50		ns
Output Impedance	R_{OUT}	f = 100kHz, A_V = 0dB		2		Ω
Full Scale Output Current	I_{OUT}	R_L = 150Ω	±15	±20		mA
Output Voltage Swing	V_{OUT}	R_L = 150Ω	±2.1	±2.5		V
Input Noise, DC to 50MHz	V_N	(Note 1)		0.15	0.5	mV_{RMS}
Isolation Between Amplifiers	ISOL	f = 5MHz (Note 1)	60	72		dB
Operating Supply Voltage	V^+, V^-		±4.5		±5.5	V
Supply Current	I_S	T_A = +25°C T_A = +85°C Both Amplifiers	30 34	35 39	42 50	mA

Note 1: Guaranteed by design.
Note 2: Input test signal: 3.58MHz sine wave of amplitude 40 IRE superimposed on a linear ramp (0 to 100 IRE). The amplifier is operated at a gain of 2V/V while driving a 150Ω load. 140 IRE = 1.0V.

Typical Operating Characteristics

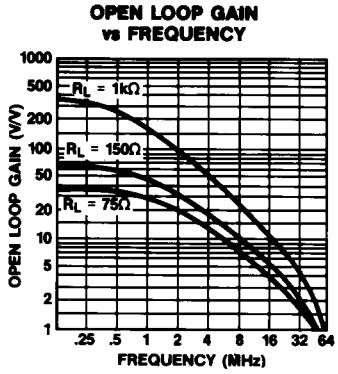

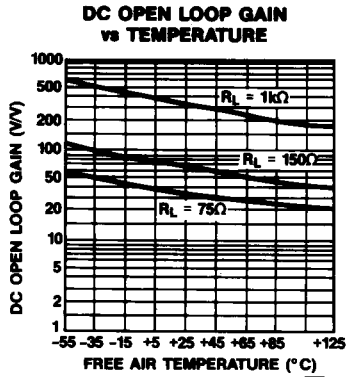

Detailed Description

The MAX457's dual video amplifiers are similar in design to the MAX452 single video amplifier, however, improvements have been made in gain linearity and bandwidth. The MAX457 video amplifier is similar to a transconductance amplifier that has an output current proportional to the difference of the voltages at the input terminals. That is,

$$I_{OUT} = Gm \times [(V_{IN}^{+}) - (V_{IN}^{-})]$$

where Gm is about 0.6 amps/V. The output impedance of the amplifier is about 1.1kΩ. This gives an unloaded voltage gain of Gm × R_{OUT} = 660V/V. This open loop gain is drastically reduced when driving conventional loads of 75 or 150Ω.

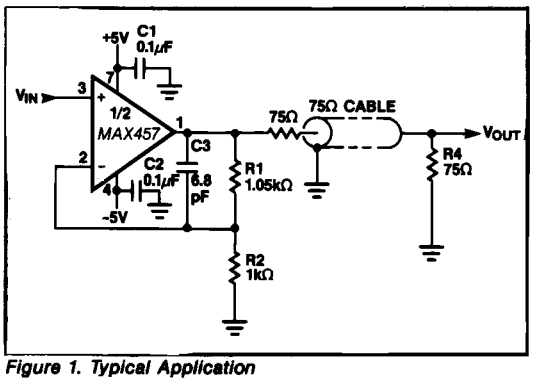

Figure 1. Typical Application

Figure 1 shows a typical application of one of the amplifiers of a MAX457 being used to drive a doubly terminated 75Ω cable. The closed loop gain of the amplifier is 2.00V/V. R1 is 1.05kΩ instead of 1kΩ to make up for the low open loop gain of the MAX457. R1 can be calculated from the following equation:

$$R1 = [(AG + A - G)/(G - A)] \times R2$$

where A is the closed loop gain of the amplifier, and G is the open loop gain of the amplifier (approximately equal to Gm × R_{LOAD}). In this particular example, Gm is 0.6, R_{LOAD} is about 124Ω [(R_{OUT} paralleled with (R1 + R2) paralleled with 150Ω load)], and R2 is 1kΩ. Thus, G is 0.6 × 124 = 74.4V/V, and A is 2V/V (the targeted closed loop gain value). This gives a value of 1.05kΩ for R1. C1 and C2 are power supply bypass capacitors. C3 helps prevent peaking at high frequencies. This peaking results from the input capacitance of the amplifier which is driven by the relatively high impedance of the feedback resistors, R1 and R2. At 50MHz, the feedback resistors cause a substantial phase delay. Adding C3 eliminates this delay. At higher closed loop gains (about 5V/V or more), C3 serves little purpose and should be omitted.

The MAX457 is unity gain stable when driving a 75Ω load. To insure that the amplifier doesn't oscillate, the load resistor should be nominally 75 × A_{VCL}, where A_{VCL} is the closed loop gain of the amplifier. Following this rule will result in a minimum amount of ringing or overshoot. Higher values may be used, but peaking of the output signal may occur in the 30 to 60MHz range. It is generally safe to use loads less than 150 × A_{VCL}. Table 1 gives suggested loads for various closed loop gains. R2 is arbitrarily chosen to be 1kΩ. R1 is calculated to give the nominal closed loop gain with the specified load. Note that the gain-bandwidth product increases as R_{LOAD} increases.

Table 1. Gain and Load Resistor Selection

GAIN (V/V)	f-3dB (MHz)	R1 (Ω)	R2 (Ω)	R_{load} (Ω)
1	70	39	1000	75
2	50	1050	1000	150
5	40	4170	1000	390
10	25	9420	1000	750

Dual CMOS Video Amplifier

If the MAX457 is used to drive a capacitive load, such as the input to a flash converter, the load capacitance should be isolated by a series resistor to limit amplifier ringing. Figure 2 shows how this is done. As a rule, the resistor should be chosen such that the RC product is 10ns or longer. This scheme needn't be used if C_{LOAD} is less than 100pF.

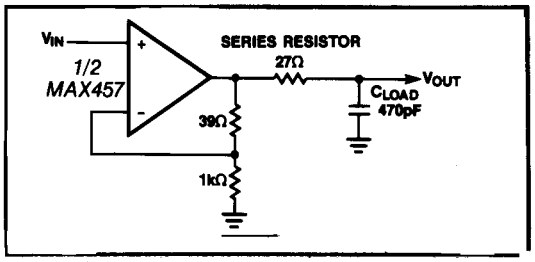

Figure 2. Isolating a Capacitive Load

Chip Topography

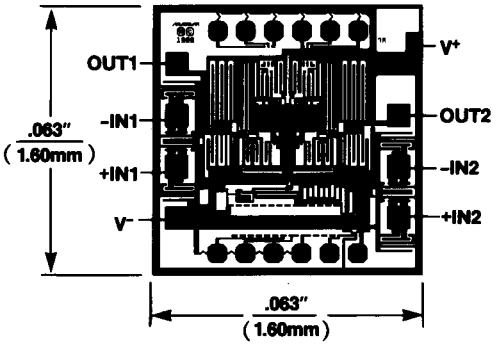

Package Information

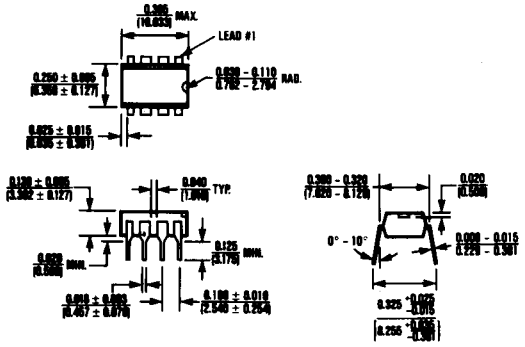

8 Lead Plastic DIP (PA)
θ_{JA} = 120°C/W
θ_{JC} = 70°C/W

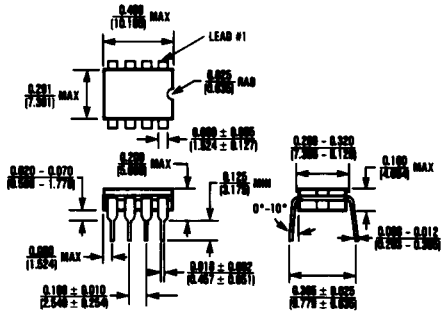

8 Lead CERDIP (JA)
θ_{JA} = 125°C/W
θ_{JC} = 55°C/W

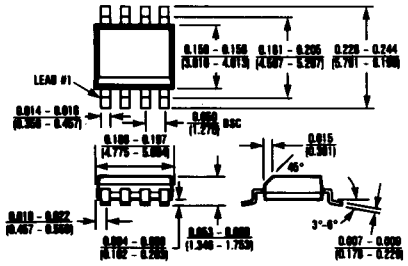

8 Lead Small Outline (SA)
θ_{JA} = 170°C/W
θ_{JC} = 80°C/W

Maxim cannot assume responsibility for use of any circuitry other than circuitry entirely embodied in a Maxim product. No circuit patent licenses are implied. Maxim reserves the right to change the circuitry and specifications without notice at any time.

© 1989 Maxim Integrated Products Printed USA MAXIM is a registered trademark of Maxim Integrated Products.