19-1068; Rev 0; 6/96

MAXIM

Dual-Supply, Low-On-Resistance, SPST, CMOS Analog Switches

General Description

The MAX4516/MAX4517 are single-pole/single-throw (SPST), CMOS, low-voltage, dual-supply analog switches with very low switch on-resistance. The MAX4516 is normally open (NO). The MAX4517 is normally closed (NC).

These CMOS switches can operate continuously with dual supplies between ±1V and ±6V. Each switch can handle rail-to-rail analog signals. The off-leakage current maximum is only 1nA at +25°C or 20nA at +85°C.

The digital input is referenced to the positive power supply and is CMOS compatible.

For pin-compatible parts for use with a single supply, refer to the MAX4514/MAX415.

Applications

Battery-Operated Equipment

Audio and Video Signal Routing

Low-Voltage Data-Acquisition Systems

Communications Circuits

PCMCIA Cards

Cellular Phones

Modems

Features

- ♦ **Available in SOT23-5 Package**
- ♦ **±1V to ±6V Dual-Supply Operation**
- ♦ **Guaranteed On-Resistance: 20Ω with ±5V Supplies**
- ♦ **Guaranteed Low Off-Leakage Currents:**
  1nA at +25°C
  20nA at +85°C
- ♦ **Guaranteed Low On-Leakage Currents:**
  2nA at +25°C
  40nA at +85°C
- ♦ **Low Charge Injection: 20pC Max**
- ♦ **Fast Switching Speed: t_{ON} = 100ns, t_{OFF} = 75ns**
- ♦ **$t_{ON} > t_{OFF}$ at ±5V**
- ♦ **CMOS Logic Compatible with ±5V Supplies**

Ordering Information

PART	TEMP. RANGE	PIN-PACKAGE
MAX4516CPA	0°C to +70°C	8 Plastic DIP
MAX4516CSA	0°C to +70°C	8 SO
MAX4516CUK	0°C to +70°C	5 SOT23-5
MAX4516C/D	0°C to +70°C	Dice*

Ordering Information continued at end of data sheet.

**Contact factory for dice specifications.*

Pin Configurations

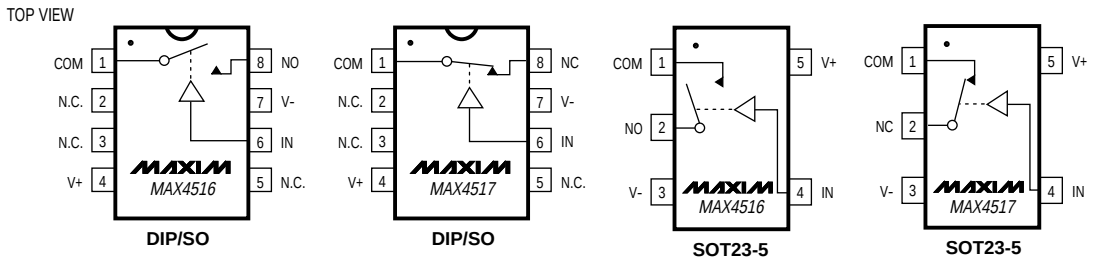

INPUT	SWITCH STATE	
	MAX4516	MAX4517
LOW	OFF	ON
HIGH	ON	OFF

N.C. = NOT INTERNALLY CONNECTED

MARKING INFORMATION (SOTs only)
LOT SPECIFIC CODE
XX XX
AG = MAX4516
AH = MAX4517

For free samples & the latest literature: http://www.maxim-ic.com, or phone 1-800-998-8800

Dual-Supply, Low-On-Resistance, SPST, CMOS Analog Switches

ABSOLUTE MAXIMUM RATINGS

(Voltages Referenced to V-)
V+ .....-0.3V, +13V
Voltage into Any Terminal (Note 1)
or ±20mA (whichever occurs first) .....-0.3V to (V+ + 0.3V)
Continuous Current into Any Terminal.....±20mA
Peak Current, NO, NC, or COM_
(pulsed at 1ms, 10% duty cycle).....±30mA
ESD per Method 3015.7 .....>2000V
Continuous Power Dissipation (T_A = +70°C)
8-Pin Plastic DIP (derate 9.09mW/°C above +70°C) ...727mW
8-Pin SO (derate 5.88mW/°C above +70°C).....471mW
5-Pin SOT23-5 (derate 7.1mW/°C above +70°C) 571mW
8-Pin CERDIP (derate 8.00mW/°C above +70°C).....640mW
Operating Temperature Ranges
MAX4516C_ _/MAX4517_ _ .....0°C to +70°C
MAX4516E_ _/MAX4517E_ _ .....-40°C to +85°C
MAX4516MJA/MAX4517MJA .....-55°C to +125°C
Storage Temperature Range .....-65°C to +150°C
Lead Temperature (soldering, 10sec) .....+300°C

Note 1: Voltages exceeding V+ or V- on any signal terminal are clamped by internal diodes. Limit forward-diode current to maximum current rating.

Stresses beyond those listed under "Absolute Maximum Ratings" may cause permanent damage to the device. These are stress ratings only, and functional operation of the device at these or any other conditions beyond those indicated in the operational sections of the specifications is not implied. Exposure to absolute maximum rating conditions for extended periods may affect device reliability.

ELECTRICAL CHARACTERISTICS—±5V Supply

(V+ = +4.5V to +5.5V, V- = -4.5V to -5.5V, V_{INH} = 3.5V, V_{INL} = 1.5V, T_A = T_{MIN} to T_{MAX}, unless otherwise noted. Typical values are at T_A = +25°C.)

PARAMETER	SYMBOL	CONDITIONS			MIN	TYP (Note 2)	MAX	UNITS
ANALOG SWITCH								
Analog Signal Range	V_{COM}, V_{NO}, V_{NC}				V-		V+	V
COM to NO or NC On-Resistance	R_{ON}	V+ = 5V, V- = -5V, V_{NO} or V_{NC} = 3V, I_{COM} = 1mA	T_A = +25°C			10	20	Ω
			T_A = T_{MIN} to T_{MAX}				25	
COM to NO or NC On-Resistance Flatness	$R_{FLAT(ON)}$	V+ = 5V, V- = -5V; V_{NO} or V_{NC} = 3V, 0V, -3V; I_{COM} = 1mA	T_A = +25°C			2	4	Ω
			T_A = T_{MIN} to T_{MAX}				6	
NO or NC Off-Leakage Current (Note 3)	$I_{NO(OFF)}$ $I_{NC(OFF)}$	V+ = 5.5V, V- = 5.5V, V_{COM} = ±4.5V, V_{NO} or V_{NC} = ∓4.5V	T_A = +25°C		-1	0.01	1	nA
			T_A = T_{MIN} to T_{MAX}	C, E	-20		20	
				M	-100		100	
COM Off-Leakage Current (Note 3)	$I_{COM(OFF)}$	V+ = 5.5V, V- = -5.5V, V_{COM} = ±4.5V, V_{NO} or V_{NC} = ∓4.5V	T_A = +25°C		-1	0.01	1	nA
			T_A = T_{MIN} to T_{MAX}	C, E	-20		20	
				M	-100		100	
COM On-Leakage Current (Note 3)	$I_{COM(ON)}$	V+ = 5.5V, V- = -5.5V, V_{COM} = ±4.5V, V_{NO} or V_{NC} = ±4.5V	T_A = +25°C		-2	0.01	2	nA
			T_A = T_{MIN} to T_{MAX}	C, E	-40		40	
				M	-200		200	
DIGITAL I/O								
Input Logic High	V_{IH}				V+ - 1.5V		V+	V
Input Logic Low	V_{IL}				V-		V+ - 3.5V	V
Input Current Logic High or Low	I_{IH}, I_{IL}	V_{IN} = V+, 0V			-0.5	0.03	0.5	µA

ELECTRICAL CHARACTERISTICS—±5V Supply (continued)

(V+ = +4.5V to +5.5V, V- = -4.5V to -5.5V, V_{INH} = 3.5V, V_{INL} = 1.5V, T_A = T_{MIN} to T_{MAX}, unless otherwise noted. Typical values are at T_A = +25°C.)

PARAMETER	SYMBOL	CONDITIONS		MIN	TYP	MAX (Note 2)	UNITS
SWITCH DYNAMIC CHARACTERISTICS							
Turn-On Time	t_{ON}	Figure 1	T_A = +25°C		40	100	ns
			T_A = T_{MIN} to T_{MAX}			150	
Turn-Off Time	t_{OFF}	Figure 1	T_A = +25°C		30	75	ns
			T_A = T_{MIN} to T_{MAX}			125	
Charge Injection (Note 4)	Q	C_L = 1nF, V_{NO} = 0V, R_S = 0Ω, T_A = +25°C, Figure 2			10	20	pC
Off Isolation	V_{ISO}	R_L = 50Ω, C_L = 15pF, V_{NO} = $1V_{RMS}$, f = 100kHz, T_A = +25°C, Figure 3			-86		dB
NO or NC Off Capacitance	$C_{NO(OFF)}$, $C_{NO(ON)}$	f = 1MHz, T_A = +25°C, Figure 4			9		pF
COM Off Capacitance	$C_{COM(OFF)}$	f = 1MHz, T_A = +25°C, Figure 4			9		pF
COM On Capacitance	$C_{COM(ON)}$	f = 1MHz, T_A = +25°C, Figure 4			22		pF
POWER SUPPLY							
Power-Supply Range				±1		±6	V
V+ Supply Current	I+	V_{IN} = 0V or V+	T_A = +25°C		40	125	µA
			T_A = T_{MIN} to T_{MAX}			200	
V- Supply Current	I-	V_{IN} = 0V or V+	T_A = +25°C	-125	-30		µA
			T_A = T_{MIN} to T_{MAX}	200			

Note 2: The algebraic convention is used in this data sheet; the most negative value is shown in the minimum column.
Note 3: Leakage parameters are 100% tested at maximum-rated hot operating temperature, and are guaranteed by correlation at +25°C.
Note 4: Guaranteed, not production tested.
Note 5: SOT packaged parts are 100% tested at +25°C. Limits at maximum and minimum rated temperature are guaranteed by design and correlation limits at +25°C.

Dual-Supply, Low-On-Resistance, SPST, CMOS Analog Switches

Typical Operating Characteristics

(V+ = +5V, V- = -5V, T_A = +25°C, unless otherwise noted.)

ON-RESISTANCE vs. V_{COM} OVER TEMPERATURE

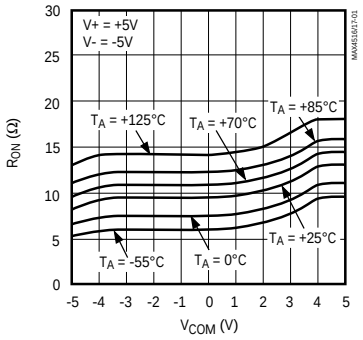

ON-RESISTANCE vs. V_{COM}

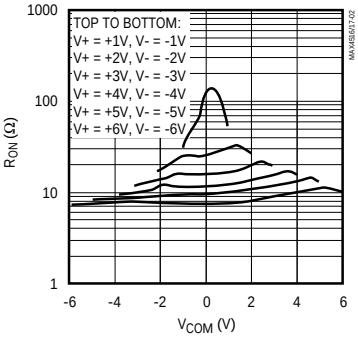

CHARGE INJECTION vs. V_{COM}

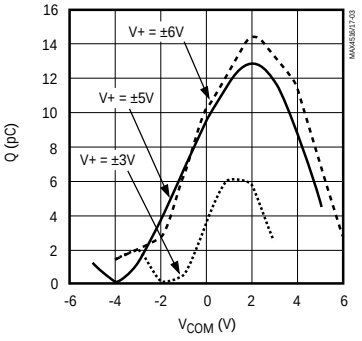

ON/OFF-LEAKAGE vs. TEMPERATURE

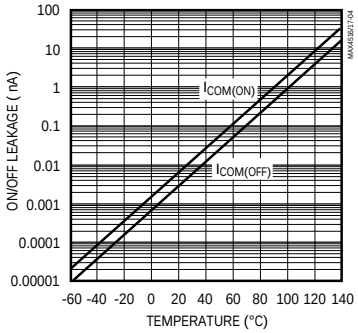

FREQUENCY RESPONSE

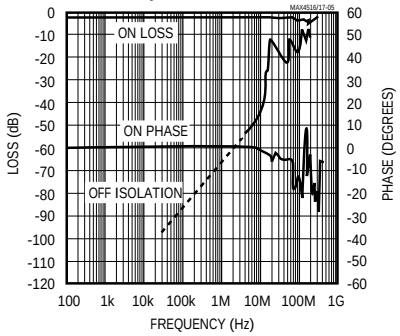

TOTAL HARMONIC DISTORTION vs. FREQUENCY

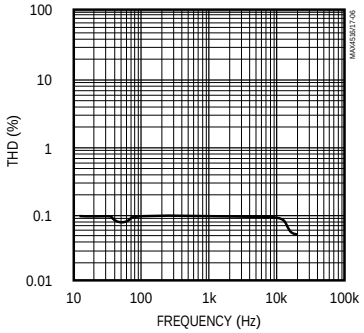

T_{ON}/T_{OFF} vs. SUPPLY VOLTAGE

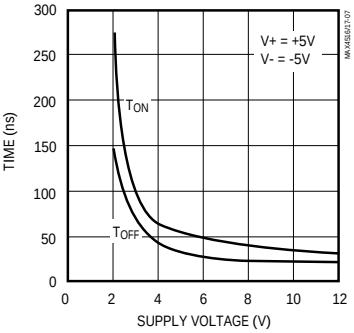

SUPPLY CURRENT vs. TEMPERATURE

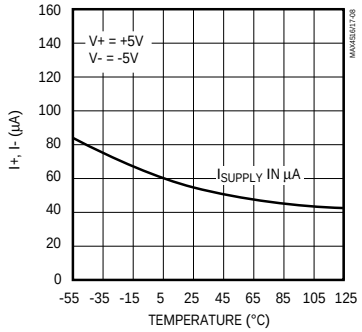

Pin Description

PIN				NAME	FUNCTION
MAX4516		MAX4517			
DIP/SO	SOT23-5	DIP/SO	SOT23-5		
1	1	1	1	COM	Analog Switch Common Terminal
2, 3, 5	—	2, 3, 5	—	N.C.	No Connect (not internally connected)
4	5	4	5	V+	Positive Supply-Voltage Input (analog and digital)
6	4	6	4	IN	Digital Control Input
7	3	7	3	V-	Negative Supply-Voltage Input (analog and digital)
8	2	—	—	NO	Analog Switch (normally open)
—	—	8	2	NC	Analog Switch (normally closed)

Note: NO, NC, and COM pins are identical and interchangeable. Any may be considered as an input or an output; signals pass equally well in both directions.

Applications Information

Power-Supply Considerations

The MAX4516/MAX4517 operate with power-supply voltages from ±1V to ±6V, but are tested and guaranteed only with ±5V supplies. Similarly, they will operate with a single +2V to +12V supply, but logic-level inputs can shift with higher voltages. The pin-compatible MAX4514/MAX4515 are recommended for use with a single supply.

The MAX4516/MAX4517 construction is typical of most CMOS analog switches, except that they have only two supply pins: V+ and V-. V+ and V- drive the internal CMOS switches and set their analog voltage limits. Reverse ESD-protection diodes are internally connected between each analog-signal pin and both V+ and V-. One of these diodes conducts if any analog signal exceeds V+ or V-.

Virtually all the analog leakage current comes from the ESD diodes to V+ or V-. Although the ESD diodes on a given signal pin are identical and therefore fairly well balanced, they are reverse biased differently. Each is biased by either V+ or V- and the analog signal. This means their leakages will vary as the signal varies. The difference in the two diode leakages to the V+ and V- pins constitutes the analog-signal-path leakage current. All analog leakage current flows between each pin and one of the supply terminals, not to the other switch terminal. This is why both sides of a given switch can show leakage currents of the same or opposite polarity.

There is no connection between the analog-signal paths and V+ or V-.

V+ and V- also power the internal logic and logic-level translators. The logic-level translators convert the logic levels to switched V+ and V- signals to drive the analog signal gates.

Logic-Level Thresholds

The logic-level thresholds are CMOS-compatible but **not TTL-compatible**. Since these parts have no ground pin, the logic-level threshold is referenced to V+. The threshold limits are V+ = -1.5V and V+ = -3.5V for V+ levels between +6V and +3V. When V+ = +2V, the logic threshold is approximately 0.6V.

Do not connect the MAX4516/MAX4517's V+ to +3V and then connect the logic-level pins to logic-level signals that operate from a +5V supply. TTL levels can exceed +3V and violate the absolute maximum ratings, damaging the part and/or external circuits.

High-Frequency Performance

In 50Ω systems, signal response is reasonably flat up to 250MHz (see *Typical Operating Characteristics*). Above 20MHz, the on response has several minor peaks that are highly layout dependent. The problem is not in turning the switch on; it's in turning it off. The off-state switch acts like a capacitor and passes higher frequencies with less attenuation. At 10MHz, off isolation is about -48dB in 50Ω systems, decreasing (approximately 20dB per decade) as frequency increases. Higher circuit impedances also cause off isolation to decrease. Off isolation is about 3dB above that of a bare IC socket, and is due entirely to capacitive coupling.

Dual-Supply, Low-On-Resistance, SPST, CMOS Analog Switches

Test Circuits/Timing Diagrams

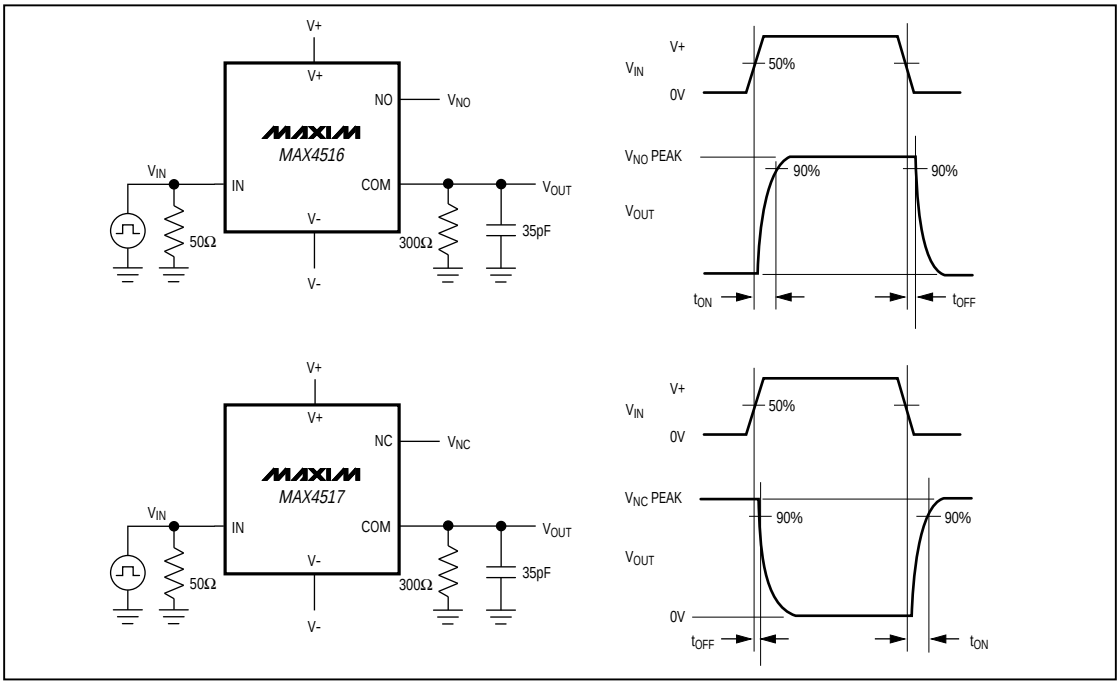

Figure 1. Switching Times

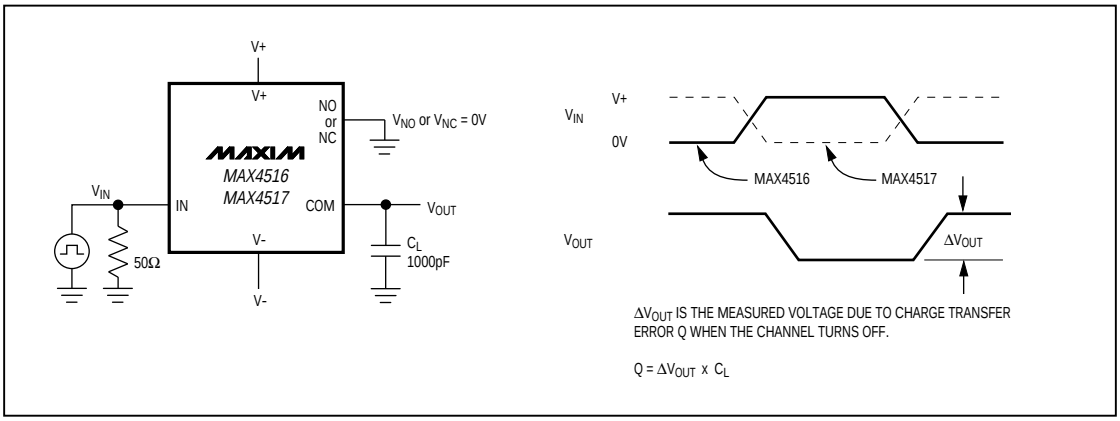

Figure 2. Charge Injection

Test Circuits/Timing Diagrams (continued)

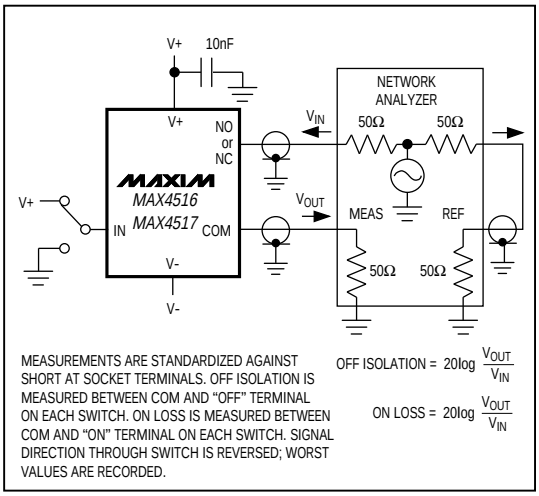

Figure 3. Off Isolation, On Loss, and Crosstalk

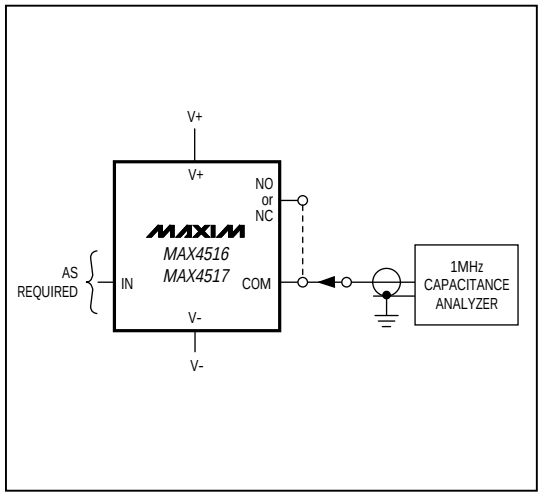

Figure 4. NO, NC, and COM Capacitance

Ordering Information (continued)

PART	TEMP. RANGE	PIN-PACKAGE
MAX4516EPA	-40°C to +85°C	8 Plastic DIP
MAX4516ESA	-40°C to +85°C	8 SO
MAX4516EUK	-40°C to +85°C	5 SOT23-5
MAX4516MJA	-55°C to +125°C	8 CERDIP**
MAX4517CPA	0°C to +70°C	8 Plastic DIP
MAX4517CSA	0°C to +70°C	8 SO
MAX4517CUK	0°C to +70°C	5 SOT23-5
MAX4517C/D	0°C to +70°C	Dice*
MAX4517EPA	-40°C to +85°C	8 Plastic DIP
MAX4517ESA	-40°C to +85°C	8 SO
MAX4517EUK	-40°C to +85°C	5 SOT23-5
MAX4517MJA	-55°C to +125°C	8 CERDIP**

**Contact factory for dice specifications.*
***Contact factory for availability.*

Chip Topography

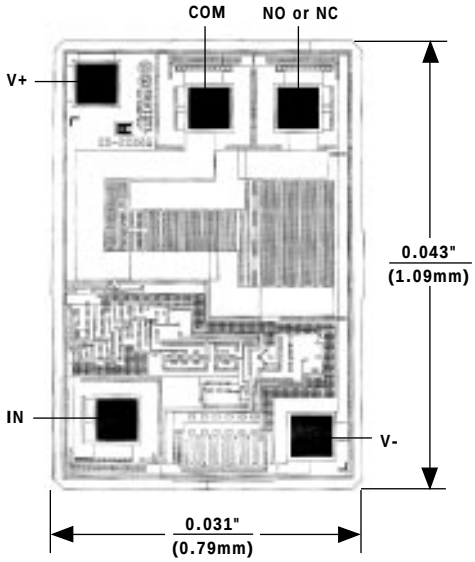

TRANSISTOR COUNT: 36
SUBSTRATE IS INTERNALLY CONNECTED TO V+

Dual-Supply, Low-On-Resistance, SPST, CMOS Analog Switches

Tape-and-Reel Information

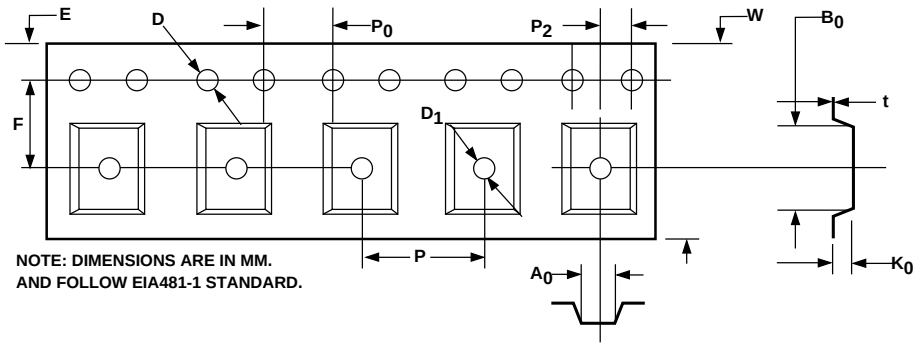

A_0	3.200	±0.102
B_0	3.099	±0.102
D	1.499	+0.102 +0.000
D_1	0.991	+0.254 +0.000

E	1.753	±0.102
F	3.505	±0.051
K_0	1.397	±0.102
P	3.988	±0.102

P_0	3.988	±0.102
$P_0$10	40.005	±0.203
P_2	2.007	±0.051
t	0.254	±0.127
W	8.001	+0.305 -0.102

5 SOT23-5

Package Information

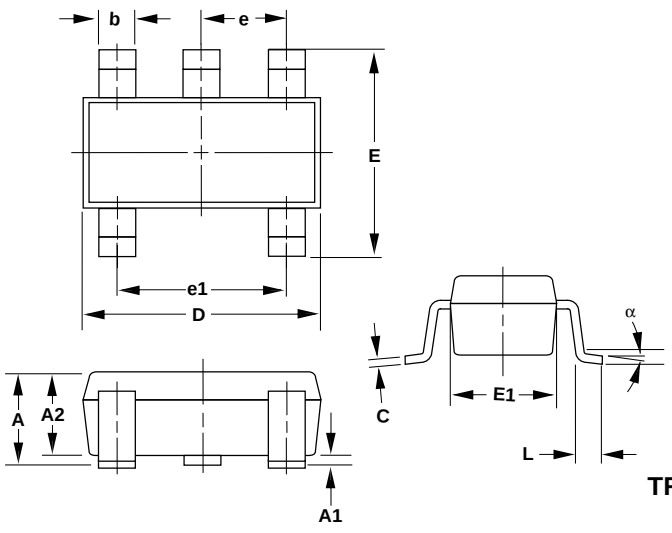

DIM	MILLIMETERS	
	MIN	MAX
A	0.90	1.45
A1	0.00	0.15
A2	0.90	1.30
b	0.35	0.50
C	0.08	0.20
D	2.80	3.00
E	2.60	3.00
E1	1.50	1.75
L	0.35	0.55
e	0.95ref	
e1	1.90ref	
α	0°	10°

21-0057B

5-PIN SOT23-5 SMALL-OUTLINE TRANSISTOR PACKAGE

Maxim cannot assume responsibility for use of any circuitry other than circuitry entirely embodied in a Maxim product. No circuit patent licenses are implied. Maxim reserves the right to change the circuitry and specifications without notice at any time.

© 1996 Maxim Integrated Products Printed USA MAXIM is a registered trademark of Maxim Integrated Products.