19-0449; Rev 0; 4/88

MAXIM

Fault-Protected Analog Multiplexer

General Description

Maxim's HI-508A and MAX358 are 8 channel single-ended (1 of 8) multiplexers with fault protection. Maxim's HI-509A and MAX359 are 4 channel differential (2 of 8) multiplexers with fault protection. Using a series N-channel, P-channel, N-channel structure, these multiplexers provide significantly improved fault protection. If the power supplies to the Maxim fault-protected multiplexer are inadvertently turned off while input voltages are still applied, *all* channels in the multiplexer are turned off, and only a few nanoamperes of leakage current will flow into the inputs. This protects not only the multiplexer and the circuitry driven by the multiplexer, but also protects the sensors or signal sources which drive the multiplexer.

The Maxim series N-channel, P-channel, N-channel protection structure has two significant advantages over the simple current limiting protection scheme of the first generation fault protected multiplexers. First, the Maxim protection scheme limits fault currents to nanoamp leakage values rather than many milliamperes. This prevents damage to sensors or other sensitive signal sources. Second, the Maxim fault-protected multiplexers can withstand a *continuous* ±35V overvoltage, unlike the first generation which has a continuous overvoltage limitation of about ±10V imposed by power dissipation considerations.

All digital inputs have logic thresholds of 0.8V and 2.4V, ensuring both TTL and CMOS compatibility without requiring pullup resistors. Break-before-make operation is guaranteed. Power supply currents have been reduced and typical power dissipation is less than 2 milliwatts.

Applications

Data Acquisition Systems

Industrial and Process Control Systems

Avionics Test Equipment

Signal Routing between Systems

Features

- **Improved 2nd Source (See "Maxim Advantage" on 3rd and 5th page)**
- **All Switches Off with Power Supplies Off**
- **On Channel Turns OFF if Overvoltage Occurs**
- **Only Nanoamperes of Input Current under All Fault Conditions**
- **Latchup-proof Construction**
- **Operates from ±4.5 to ±18V Supplies**
- **All Digital Inputs are TTL and CMOS Compatible**

Ordering Information

PART	TEMP. RANGE	PACKAGE
MAX358CPE	0°C to +75°C	16 Lead Plastic DIP
MAX358CWE	0°C to +75°C	16 Lead Wide SO
MAX358CJE	0°C to +75°C	16 Lead CERDIP
MAX358EPE	-40°C to +85°C	16 Lead Plastic DIP
MAX358EWE	-40°C to +85°C	16 Lead Wide SO
MAX358EJE	-40°C to +85°C	16 Lead CERDIP
MAX358MJE	-55°C to +125°C	16 Lead CERDIP
MAX358C/D**	0°C to +75°C	Dice
MAX359CPE	0°C to +75°C	16 Lead Plastic DIP
MAX359CWE	0°C to +75°C	16 Lead Wide SO
MAX359CJE	0°C to +75°C	16 Lead CERDIP
MAX359EPE	-40°C to +85°C	16 Lead Plastic DIP
MAX359EWE	-40°C to +85°C	16 Lead Wide SO
MAX359EJE	-40°C to +85°C	16 Lead CERDIP
MAX359MJE	-55°C to +125°C	16 Lead CERDIP
MAX359C/D**	0°C to +75°C	Dice

(Ordering Information is continued on last page.)

** The substrate may be allowed to float or be tied to V⁺ (JI CMOS).

Pin Configuration

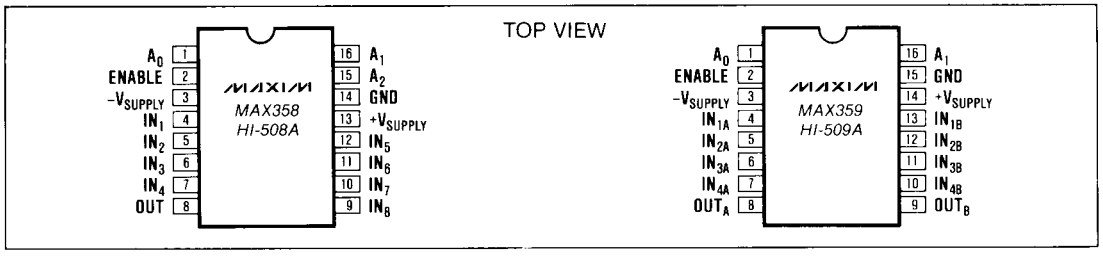

The "Maxim Advantage"™ signifies an upgraded quality level. At no additional cost we offer a second-source device that is subject to the following: guaranteed performance over temperature along with tighter test specifications on many key parameters; and device enhancements, when needed, that result in improved performance without changing the functionality.

Call toll free 1-800-998-8800 for free samples or literature.

Fault-Protected Analog Multiplexer

ABSOLUTE MAXIMUM RATINGS

Voltage between Supply Pins ..... +44V
V^+ ..... +22V
V^- ..... -22V
Digital Input Overvoltage:
V_{EN}, V_A { $V_{Supply}(+)$ ..... +4V
{ $V_{Supply}(-)$ ..... -4V
Analog Input Overvoltage with Multiplexer Power On:
V_S { $V_{Supply}(+)$ ..... +20V
{ $V_{Supply}(-)$ ..... -20V
Analog Input Overvoltage with Multiplexer Power Off:
V_S { $V_{Supply}(+)$ ..... +35V
{ $V_{Supply}(-)$ ..... -35V

Continuous Current, S or D 20mA
Peak Current, S or D
(Pulsed at 1ms, 10% duty cycle max) 40mA
Power Dissipation (Note 1) (CERDIP) 1.28W
Operating Temperature Range:
MAX358/359M; HI-508A/509A-2, -8 ..... -55°C to +125°C
MAX358/359C; HI-508A/509A-5 ..... 0°C to +75°C
MAX358/359E ..... -40°C to +85°C
Storage Temperature Range ..... -65°C to +150°C

Note 1: Derate 12.8mW/°C above T_A = +75°C

Stresses above those listed under "Absolute Maximum Ratings" may cause permanent damage to the device. These are stress ratings only and functional operation of the device at these or any other conditions above those indicated in the operational sections of the specifications is not implied. Exposure to absolute maximum rating conditions for extended periods may affect device reliability.

ELECTRICAL CHARACTERISTICS: HI-508A/509A (See facing page for MAX358/359.)

Supplies = +15V, -15V; V_{AH} (Logic Level High) = +4.0V, V_{AL} (Logic Level Low) = +0.8V (unless otherwise noted).

PARAMETER	SYMBOL	CONDITIONS	TEMP	-55°C to +125°C			0°C to +75°C			UNITS
				MIN	TYP	MAX	MIN	TYP	MAX	
STATIC										
ON Resistance	$r_{DS(ON)}$	V_D = ±10V, I_S = 100μA V_{AL} = 0.8V, V_{AH} = 4V	+25°C Full		1.2 1.5	1.5 1.8		1.5 1.8	1.8 2.0	kΩ
OFF Input Leakage Current	$I_{S(OFF)}$	V_S = ±10V, V_D = ∓10V V_{EN} = 0.8V (Note 2)	+25°C Full		0.03	 50		0.03	 50	nA
OFF Output Leakage Current	$I_{D(OFF)}$	V_D = ±10V, V_S = ∓10V V_{EN} = 0.8V HI-508A (Note 2) HI-509A	+25°C Full Full		0.1	 200 100		0.1	 200 100	nA
ON Channel Leakage Current	$I_{D(ON)}$	$V_{S(ALL)}$ = V_D = ±10V (Note 2) V_{AH} = V_{EN} = 4V HI-508A V_{AL} = 0.8V HI-509A	+25°C Full Full		0.1	 200 100		0.1	 200 100	nA
Analog Signal Range	V_{AN}		Full	-15		+15	-15		+15	V
Differential, OFF Output Leakage Current	I_{DIFF}	(HI-509A only)	Full			50			50	nA
FAULT										
Output Leakage Current (with Overvoltage)	$I_{D(OFF)}$	V_D = 0V Analog Overvoltage = ±33V	+25°C Full		4.0	 2.0		4.0		nA μA
INPUT										
Input Low Threshold	V_{AL}	(Note 3)	Full			0.8			0.8	V
Input High Threshold	V_{AH}		Full	4.0			4.0			V
Input Leakage Current (High or Low)	I_A	V_A = 4V or 0V (Note 4)	Full			1.0			1.0	μA
DYNAMIC										
Access Time	t_A		+25°C		0.5	1.0		0.5	1.0	μs
Break-Before-Make Delay	t_{ON}-t_{OFF}	V_{EN} = +5V, V_{IN} = ±10V A_0, A_1, A_2 Strobed	+25°C	25	80		25	80		ns
Enable Delay (ON)	$t_{ON(EN)}$		+25°C Full		300	500 1000		300	 1000	ns
Enable Delay (OFF)	$t_{OFF(EN)}$		+25°C Full		300	500 1000		300	 1000	ns
Settling Time (0.1%) (0.01%)	t_{SETT}		+25°C		1.2 3.5			1.2 3.5		μs

Note 2: Ten nanoamps is the practical lower limit for high speed measurement in the production test environment.
Note 3: To drive from DTL/TTL Circuits, 1kΩ pull-up resistors to +5.0V supply are recommended.
Note 4: Digital input leakage is primarily due to the clamp diodes. Typical leakage is less than 1nA at +25°C.

- ◆ Only Nanoamps of Leakage Under Fault Conditions
- ◆ All Switches OFF With Power Supplies Off
- ◆ Channel Turns OFF When Overvoltage Occurs
- ◆ TTL Compatible, No Pullups Required
- ◆ Significantly Reduced Power Consumption
- ◆ ±4.5V to ±18V Operation

ABSOLUTE MAXIMUM RATINGS: This device conforms to the Absolute Maximum Ratings on adjacent page.

ELECTRICAL CHARACTERISTICS: MAX358/359 (See facing page for HI-508A/509A.)

Specifications below satisfy or exceed all "tested" parameters on adjacent page.
Supplies = +15V, -15V; V_{AH} (Logic Level High) = +2.4V, V_{AL} (Logic Level Low) = +0.8V (unless otherwise noted).

PARAMETER	SYMBOL	CONDITIONS	TEMP	-55°C to +125°C			0°C to +75°C and -40°C to +85°C			UNITS
				MIN	TYP	MAX	MIN	TYP	MAX	
STATIC										
ON Resistance	$r_{DS(ON)}$	V_D = ±10V, I_S = 100μA V_{AL} = 0.8V, **V_{AH} = 2.4V**	+25°C Full		1.2 1.5	1.5 1.8		1.5 1.8	1.8 2.0	kΩ
OFF Input Leakage Current	$I_{S(OFF)}$	V_S = ±10V, V_D = ∓10V V_{EN} = 0.8V	+25°C Full		0.03	0.5 50		0.03	1.0 50	nA
OFF Output Leakage Current	$I_{D(OFF)}$	V_D = ±10V, V_S = ∓10V V_{EN} = 0.8V MAX358 MAX359	+25°C Full Full		0.1	1.0 200 100		0.1	2.0 200 100	nA
ON Channel Leakage Current	$I_{D(ON)}$	$V_{S(ALL)}$ = V_D = ±10V (Note 2) **V_{AH} = V_{EN} = 2.4V** MAX358 V_{AL} = 0.8V MAX359	+25°C Full Full		0.1	2.0 200 100		0.1	5.0 200 100	nA
Analog Signal Range	V_{AN}	(Note 1)	Full	-15		+15	-15		+15	V
Differential, OFF Output Leakage Current	I_{DIFF}	MAX359 only	Full			50			50	nA
FAULT										
Output Leakage Current (with Overvoltage)	$I_{D(OFF)}$	V_D = 0V (Note 2) Analog Overvoltage = ±33V	+25°C Full		4.0	 2.0		4.0		nA μA
Input Leakage Current (with Overvoltage)	**$I_{S(OFF)}$**	**V_{IN} = ±25V, V_O = ±10V (Note 2)**	**+25°C**			**5.0**			**10**	**μA**
Input Leakage Current (w. Power Supplies Off)	**$I_{S(OFF)}$**	**V_{IN} = ±25V, V_{EN} = V_O = 0V A_0 = A_1 = A_2 = 0V or 5V**	**+25°C**			**2.0**			**5.0**	**μA**
INPUT										
Input Low Threshold	V_{AL}		Full			0.8			0.8	V
Input High Threshold	**V_{AH}**		**Full**	**2.4**			**2.4**			**V**
Input Leakage Current (High or Low)	I_A	V_A = 4V or 0V (Note 4)	Full			1.0			1.0	μA
DYNAMIC										
Access Time	t_A	(Figure 1)	+25°C		0.5	1.0		0.5	1.0	μs
Break-Before-Make Delay (Figure 2)	t_{ON}-t_{OFF}	V_{EN} = +5V, V_{IN} = ±10V A_0, A_1, A_2 Strobed	+25°C	25	80		25	80		ns
Enable Delay (ON)	$t_{ON(EN)}$	(Figure 3)	+25°C Full		300	500 1000		300	 1000	ns
Enable Delay (OFF)	$t_{OFF(EN)}$	(Figure 3)	+25°C Full		300	500 1000		300	 1000	ns
Settling Time (0.1%) (0.01%)	t_{SETT}		+25°C		1.2 3.5			1.2 3.5		μs

Note 1: When the analog signal exceeds +13.5V or -12V the blocking action of Maxim's gate structure goes into operation. Only leakage currents flow and the channel on resistance rises to infinity.
Note 2: The value shown is the steady state value. The transient leakage is typically 10μA. See detailed description.
Note 3: Electrical characteristics, such as ON Resistance, will change when power supplies other than ±15V are used.
Note 4: Digital input leakage is primarily due to the clamp diodes. Typical leakage is less than 1nA at +25°C.

ELECTRICAL CHARACTERISTICS: HI-508A/509A (continued)

Supplies = +15V, -15V; V_{AH} (Logic Level High) = +4.0V, V_{AL} (Logic Level Low) = +0.8V (unless otherwise noted).

PARAMETER	SYMBOL	CONDITIONS	TEMP	-55°C to +125°C			0°C to +75°C			UNITS
				MIN	TYP	MAX	MIN	TYP	MAX	
DYNAMIC (continued)										
"OFF Isolation" (Note 5)	$OFF_{(ISO)}$	V_{EN} = 0.8V, R_L = 1kΩ, C_L = 15pF, V = $7V_{RMS}$, f = 100kHz	+25°C	50	68		50	68		dB
Channel Input Capacitance	$C_{S(OFF)}$		+25°C		5			5		pF
Channel Output Capacitance	$C_{D(OFF)}$	HI-508A HI-509A	+25°C		25 12			25 12		pF
Digital Input Capacitance	C_A		+25°C		5			5		pF
Input to Output Capacitance	$C_{DS(OFF)}$		+25°C		0.1			0.1		pF
SUPPLY										
Positive Supply Current	I^+	V_{EN}, V_A = 0V or 4V	Full		0.5	2.0		0.5	2.0	mA
Negative Supply Current	I^-	V_{EN}, V_A = 0V or 4V	Full		0.02	1.0		0.02	1.0	mA

Note 5: Worst case isolation occurs on channel 4 due to proximity to the output pins.

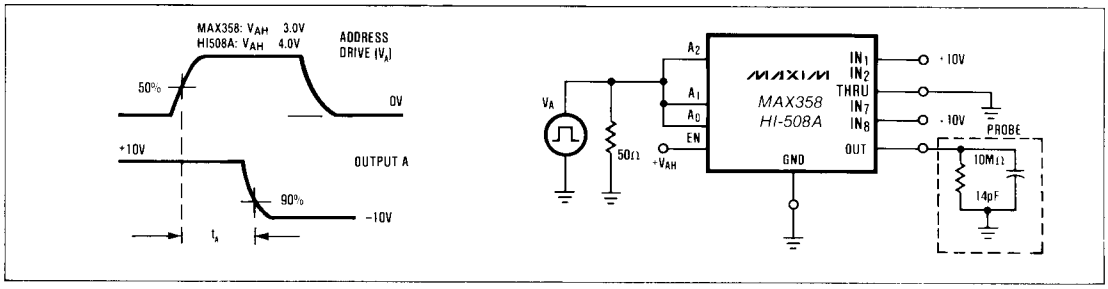

Figure 1. Access Time vs. Logic Level (High)

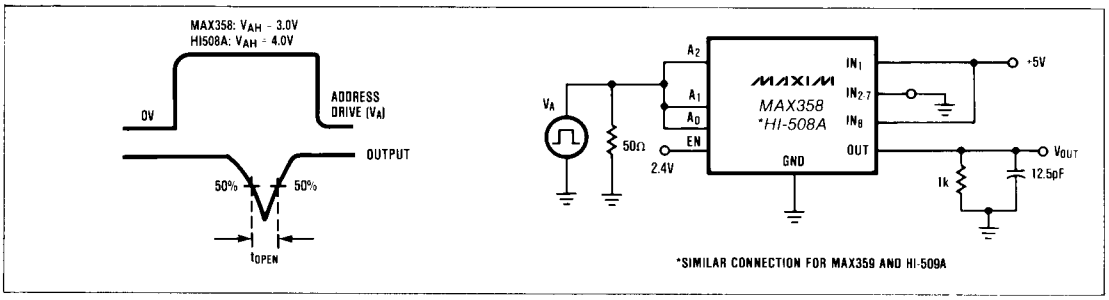

Figure 2. Break Before Make Delay (t_{OPEN})

ELECTRICAL CHARACTERISTICS: MAX358/359 (continued)

Supplies = +15V, -15V; V_{AH} (Logic Level High) = +2.4V, V_{AL} (Logic Level Low) = +0.8V (unless otherwise noted).

PARAMETER	SYMBOL	CONDITIONS	TEMP	-55°C to +125°C			0°C to +75°C and -40°C to +85°C			UNITS
				MIN	TYP	MAX	MIN	TYP	MAX	
DYNAMIC (continued)										
"OFF Isolation"	$OFF_{(ISO)}$	V_{EN} = 0.8V, R_L = 1kΩ, C_L = 15pF, V = $7V_{RMS}$, f = 100kHz	+25°C	50	68		50	68		dB
Channel Input Capacitance	$C_{S(OFF)}$		+25°C		5			5		pF
Channel Output Capacitance	$C_{D(OFF)}$	MAX358 MAX359	+25°C		25 12			25 12		pF
Digital Input Capacitance	C_A		+25°C		5			5		pF
Input to Output Capacitance	$C_{DS(OFF)}$		+25°C		0.1			0.1		pF
SUPPLY										
Positive Supply Current	I^+	**V_{EN} = 0.8V, or 2.4V All V_A = 0V or 5V**	**+25°C Full**		**0.1 0.3**	**0.6 0.7**		**0.2 0.5**	**1.0 1.0**	**mA**
Negative Supply Current	I^-	**V_{EN} = 0.8V or 2.4V All V_A = 0V or 5V**	**+25°C Full**		**0.01 0.02**	**0.1 0.2**		**0.01 0.02**	**0.1 0.1**	**mA**
Power Supply Range for Continuous Operation	V_{OP}	**(Note 5)**	**+25°C**	**±4.5**		**±18**	**±4.5**		**±18**	**V**

Note 5: Electrical characteristics, such as ON Resistance, will change when power supplies other than ±15V are used.

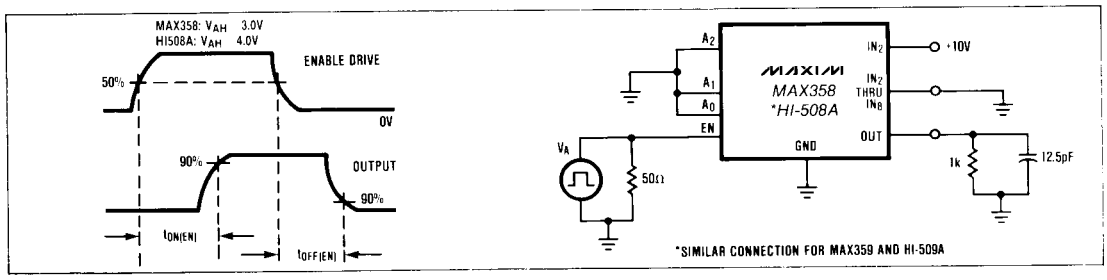

Figure 3. Enable Delay ($t_{ON(EN)}$, $t_{OFF(EN)}$)

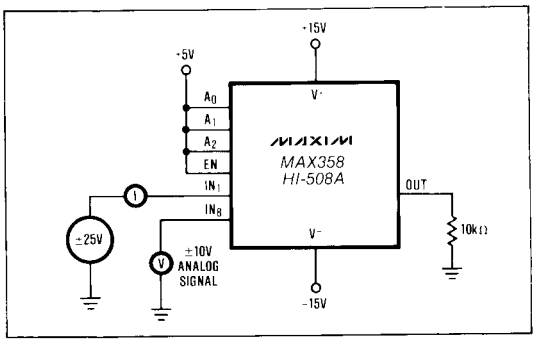

Figure 5. Input Leakage Current (Overvoltage)

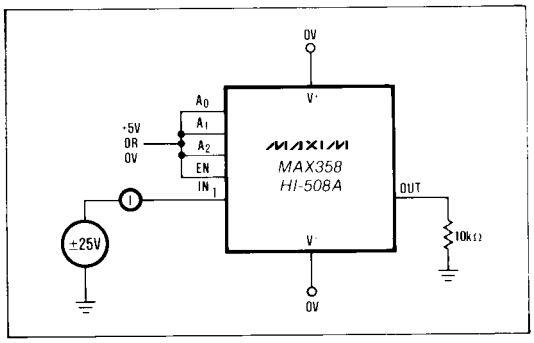

Figure 6. Input Leakage Current (with Power Supplies OFF)

Fault-Protected Analog Multiplexer

Typical Operating Characteristics

INPUT LEAKAGE VS. INPUT VOLTAGE WITH $V^+ = V^- = 0V$

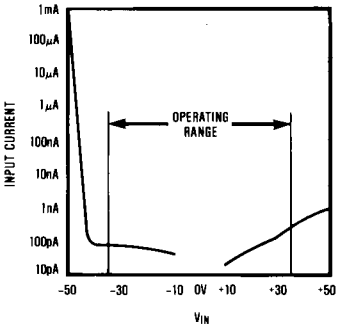

OFF CHANNEL LEAKAGE CURRENT VS. INPUT VOLTAGE WITH ±15V SUPPLIES

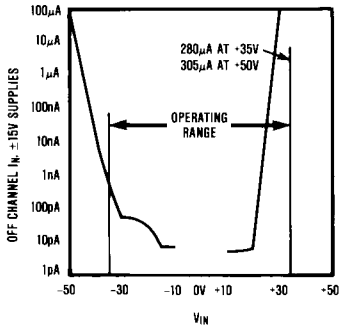

OUTPUT LEAKAGE VS. OFF CHANNEL OVERVOLTAGE WITH ±15V SUPPLIES

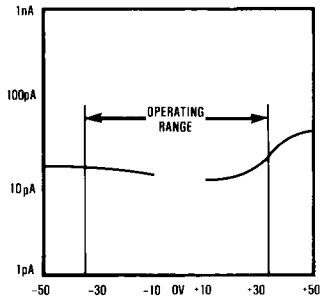

$R_{DS(ON)}$ VS. INPUT VOLTAGE

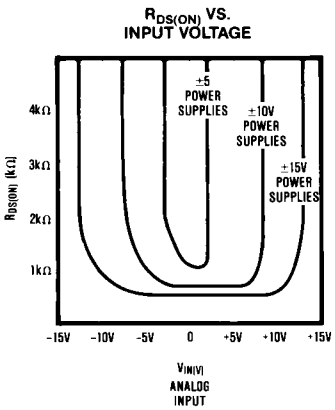

TRUTH TABLE—MAX358 AND HI-508A

A_2	A_1	A_0	EN	ON SWITCH
X	X	X	0	NONE
0	0	0	1	1
0	0	1	1	2
0	1	0	1	3
0	1	1	1	4
1	0	0	1	5
1	0	1	1	6
1	1	0	1	7
1	1	1	1	8

TRUTH TABLE—MAX359 AND HI-509A

A_1	A_0	EN	ON SWITCH
X	X	0	NONE
0	0	1	1
0	1	1	2
1	0	1	3
1	1	1	4

NOTE: Logic "0" = $V_{AL} \leq 0.8V$, Logic "1" = $V_{AH} \geq 2.4V$

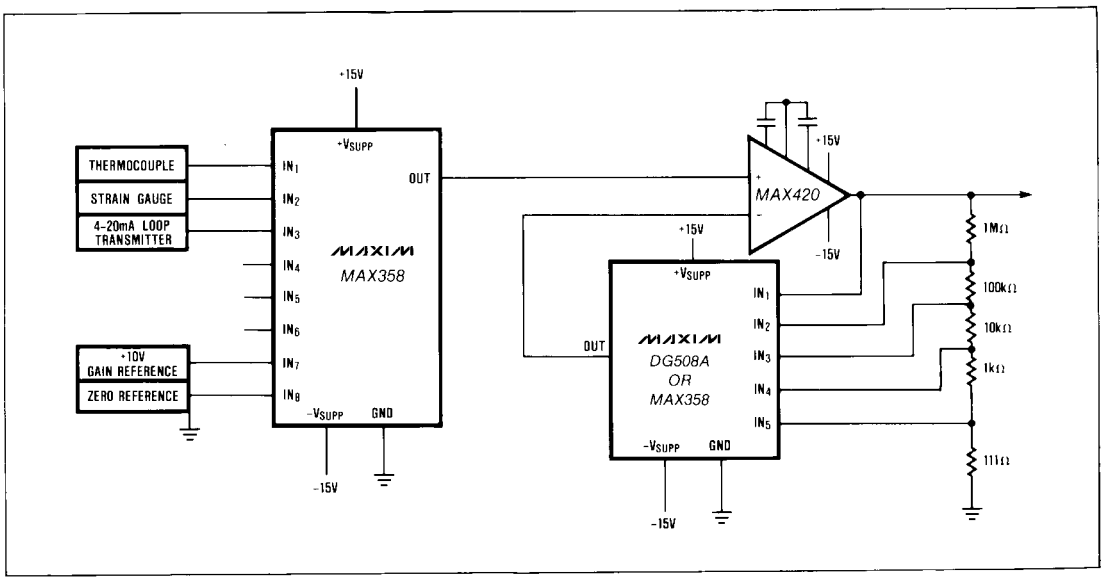

Figure 7. Typical Data Acquistion Front End

Typical Applications

Figure 7 shows a typical data acquisition system using the MAX358 multiplexer. Since the multiplexer is driving a high impedance input, its error is a function of its own resistance ($R_{DS(ON)}$) times the multiplexer leakage current ($I_{D(ON)}$) and the amplifier bias current (I_{BIAS}):

$$V_{ERR} = R_{DS(ON)} \times (I_{D(ON)} + I_{BIAS}\ (MAX420))$$
$$= 1.5k \times (2nA + 30pA)$$
$$= 3.05\mu V \text{ maximum error}$$

In most cases, this error is low enough that preamplification of input signals is not needed, even with very low level signals, such as 40μV/°C from type J thermocouples.

In systems with fewer than 8 inputs, an unused channel can be connected to the system ground reference point for software zero correction. A second channel connected to the system voltage reference allows gain correction of the entire data acquisition system as well.

A MAX 420 precision op-amp is connected as a programmable gain amplifier, with gains ranging from 1 to 10,000. The guaranteed 5μV unadjusted offset of the MAX420 maintains high signal accuracy, while programmable gain allows the output signal level to be scaled to the optimum range for the remainder of the data acquisition system, normally a Sample/Hold and A/D. Since the gain-changing multiplexer is not connected to the external sensors, it can be either a DG508A multiplexer or the fault protected MAX358.

Input switching, however, must be done with a fault protected MAX358 multiplexer if it is to provide the level of protection and isolation required with most data acquisition inputs. Since external signal sources may continue to supply voltage when the multiplexer and system power are turned off, non-fault protected multiplexers, or even first-generation fault protected devices, will allow many milliamps of fault current to flow from outside sources into the multiplexer. The result could be damage to either the sensors or the multiplexer. A non-fault protected multiplexer will also allow input overvoltages to appear at its output, perhaps damaging Sample/Holds or A/Ds. Such input overdrives may also cause input-to-input shorts, allowing the high current output of one sensor to possibly damage another.

The MAX358 eliminates all of the above problems since it not only limits its output voltage to safe levels, with or without power applied ($+V_{SUP}$ and $-V_{SUP}$), but also turns all channels off when power is removed, drawing only sub-microamp fault currents from the inputs, and maintaining isolation between inputs for continuous overvoltages up to ±35V.

Fault-Protected Analog Multiplexer

Detailed Description

Fault Protection Circuitry

Maxim's HI-508A/509A and MAX358/359 are fully fault-protected for continuous input voltages up to ±35V, whether or not the $+V_{SUP}$ and $-V_{SUP}$ power supplies are present. These devices use a "series FET" protection scheme which not only protects the multiplexer output from overvoltage, but also limits the input current to sub-microamp levels. This fault current is several orders of magnitude lower than the original manufacturer's HI-508A (several milliamps), which uses 1 to 2kΩ protection resistors in series with parasitic diodes connected to $+V_{SUP}$ and $-V_{SUP}$.

Figures 8 and 9 show how the series FET circuit protects against overvoltage conditions. When power is off, the gates of all three FETs are at ground. With a -25V input, N-channel FET Q1 is turned on by the +25V gate-to-source voltage. The P-channel device (Q2), however, has +25V V_{GS} and is turned off, thereby preventing the input signal from reaching the output. If the input voltage is +25V, Q1 has a negative V_{GS}, which turns it off. Similarly, only sub-microamp leakage currents can flow from the output back to the input, since any voltage will turn off either Q1 or Q2.

Figure 10 shows the condition of an OFF channel with $+V_{SUP}$ and $-V_{SUP}$ present. As with Figures 8 and 9, either an N-channel or a P-channel device will be off for any input voltage from -35V to +35V. The leakage current with negative overvoltages will immediately drop to a few nanoamps at 25°C. For positive overvoltages that fault current will initially be 10 or 20μA, decaying over a few seconds to the nanoamp level. The time constant of this decay is caused by the discharge of stored charge from internal nodes and does not compromise the fault protection scheme.

Figure 11 shows the condition of the ON channel with $+V_{SUP}$ and $-V_{SUP}$ present. With input voltages less than ±10V, all three FETs are on and the input signal appears at the output. If the input voltage exceeds $+V_{SUP}$ minus the N-channel threshold voltage (V_{TN}), then the N-channel FET will turn off. For voltages more negative than $-V_{SUP}$ minus the P-channel threshold (V_{TP}), the P-channel device will turn off. Since V_{TN} is typically 1.5V and V_{TP} is typically 3V, the multiplexer's output swing is limited to about -12V to +13.5V with ±15V supplies.

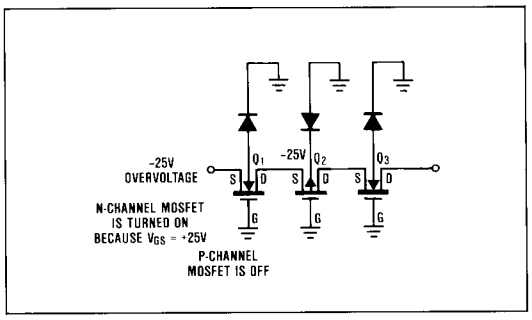

Figure 8. -25V Overvoltage with Multiplexer Power OFF

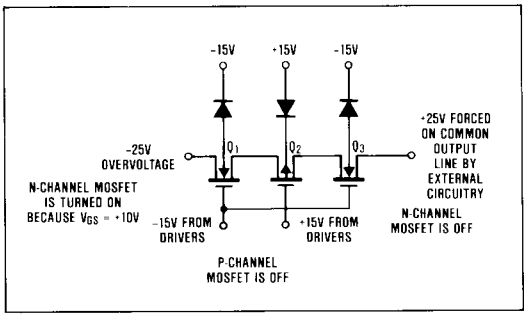

Figure 10. -25V Overvoltage on an OFF Channel with Multiplexer Power Supply ON

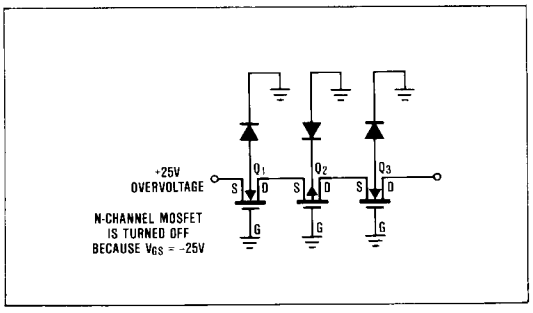

Figure 9. +25V Overvoltage with Multiplexer Power OFF

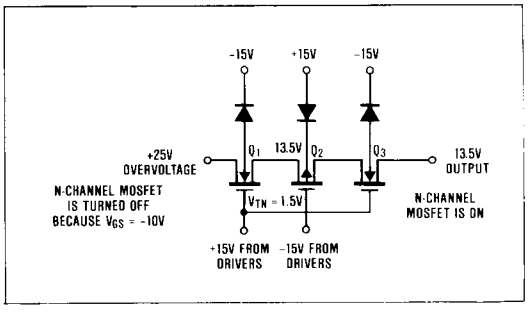

Figure 11. +25V Overvoltage Input to the ON Channel

The Typical Characteristics graphs show typical leakage vs. input voltage curves. Although the maximum rated overvoltage of these devices is ±35V, the MAX358/359 typically has excellent performance up to ±40V, providing additional margin for the unknown transients that exist in the real world. In summary, the MAX358/359 provides superior protection from all fault conditions, while using a standard, readily produced junction isolated CMOS process.

Switching Characteristics and Charge Injection

Table 1 shows typical charge injection levels vs. power supply voltages and analog input voltage. Note that since the channels are well matched, the differential charge injection for the MAX359/HI-509A is typically less than 5 picocoulombs. The charge injection that occurs during switching creates a voltage transient whose magnitude is inversely proportional to the capacitance on the multiplexer output.

The channel-to-channel switching time is typically 600ns, with about 200ns of break before make delay. This 200ns break-before-make delay prevents the input-to-input short that would occur if two input channels were simultaneously connected to the output. In a typical data acquisition system such as Figure 7, the dominant delay is not the switching time of the MAX358 multiplexer, but is the settling time of the following amplifiers and S/H. Another limiting factor is the RC time constant of the multiplexer $R_{DS(ON)}$ plus the signal source impedance multiplied by the load capacitance on the output of the multiplexer. Even with low signal source impedances, 100pF of capacitance on the multiplexer output will approximately double the settling time to 0.01% accuracy.

Operation with Supply Voltages Other than ±15V

The main effect of supply voltages other than ±15V is the reduction in output signal range. The MAX358 limits the output voltage to about 1.5V below $+V_{SUP}$ and about 3V above $-V_{SUP}$. In other words, the output swing is limited to +3.5V to -2V when operating from ±5V. The typical characteristics graphs show typical $R_{DS(ON)}$ for ±15V, ±10V, and ±5V power supplies. Maxim tests and guarantees the MAX358/359 for operation from ±4.5V to ±18V supplies. The switching delays are increased by about a factor of 2 at ±5V, but break-before-make action is preserved.

The MAX358/9 can be operated with a single +9V to +22V supply, as well as asymmetrical power supplies such at +15V and -5V. The digital threshold will remain approximately 1.6V above the Ground pin, and the analog characteristics such as $R_{DS(ON)}$ are determined by the total voltage difference between $+V_{SUP}$ and $-V_{SUP}$. Connect $-V_{SUP}$ to 0V when operating with a +9V to +22V single supply.

The MAX358 digital threshold is relatively independent of the power supply voltages, going from a typical 1.6V when $+V_{SUP}$ is 15V to 1.5V typical with a 5V $+V_{SUP}$. This means that Maxim HI-508/509A and MAX358/359 will operate with standard TTL logic levels, even with ±5V power supplies. In all cases, the threshold of the ENable pin is the same as the other logic inputs.

Table 1A. MAX358 AND HI-508A CHARGE INJECTION

Supply Voltage	Analog Input Level	Injected Charge
±5V	+1.7V	+100pC
	0V	+70pC
	-1.7V	+45pC
±10V	+5V	+200pC
	0V	+130pC
	-5V	+60pC
±15V	+10V	+300pC
	0V	+180pC
	-10V	+50pC

Test Conditions: C_L = 1000pF on multiplexer output; the tabulated analog input level is applied to channel 1; channels 2 through 8 inputs are open circuited. EN = +5V, $A_1 = A_2$ = 0V, A_0 is toggled at 2kHz rate between 0V and 3V. +100 picocoulombs of charge creates a +100mV step when injected into a 1000pF load capacitance.

Table 1B. MAX359 AND HI-509A CHARGE INJECTION

Supply Voltage	Analog Input Level	Injected Charge		
		Out A	Out B	Differential A - B
±5V	+1.7V	+105pC	+107pC	-2pC
	0V	+73pC	+74pC	-1pC
	-1.7V	+48pC	+50pC	-2pC
±10V	+5V	+215pC	+220pC	-5pC
	0V	+135pC	+139pC	-4pC
	-5V	+62pC	+63pC	-1pC
±15V	+10V	+325pC	+330pC	-5pC
	0V	+180pC	+185pC	-5pC
	-10V	+55pC	+55pC	0pC

Test Conditions: C_L = 1000pF on Out A and Out B; the tabulated analog input level is applied to inputs 1A and 1B; channels 2 through 4 are open circuited. EN = +5V, A_1 = 0V, A_0 is toggled from 0V to 3V at a 2kHz rate.

Digital Interface Levels

The typical digital threshold of both the address lines and the enable pin is 1.6V, with a temperature coefficient of about -3mV/°C. This ensures compatibility with 0.8V to 2.4V TTL logic swings over the entire temperature range. The digital threshold is relatively independent of the supply voltages, moving from 1.6V typical to 1.5V typical as the power supplies are reduced from ±15V to ±5V. In all cases, the digital threshold is referenced to the Ground pin.

The digital inputs can also be driven with CMOS logic

levels swinging from either $+V_{SUP}$ to $-V_{SUP}$ or from $+V_{SUP}$ to Ground. The digital input current is just a few nanoamps of leakage at all input voltage levels, with a guaranteed maximum of 1μA. The digital inputs are protected from ESD by a 30V zener diode between the input and $+V_{SUP}$, and can be driven ±6V beyond the supplies without drawing excessive current.

Operation as a Demultiplexer

The MAX358/9 will function as a demultiplexer, where the input is applied to the Output pin, and the Input pins are used as outputs. The MAX358/9 provides both break-before-make action and full fault protection when operated as a demultiplexer, unlike earlier generations of fault protected multiplexers.

Channel-to-Channel Crosstalk, Off Isolation and Digital Feedthrough

At DC and low frequencies the channel-to-channel crosstalk is caused by variations in output leakage currents as the off channel input voltages are varied. The MAX358 output leakage varies only a few picoamps as all 7 off inputs are toggled from -10V to +10V. The output voltage change depends on the impedance level at the MAX358 output, which is $R_{DS(ON)}$ plus the input signal source resistance in most cases since the load driven by the MAX358 is usually a high impedance. For a signal source impedance of 10kΩ or lower, the DC crosstalk exceeds 120dB.

Table 2 shows typical AC crosstalk and off isolation performance. Digital feedthrough is masked by the analog charge injection when the output is enabled. When the output is disabled, the digital feedthrough is virtually unmeasureable, since the digital pins are physically isolated from the analog section by the Ground and $-V_{SUP}$ pins. The groundplane formed by these lines is continued onto the MAX358/9 die to provide over 100dB isolation between the digital and analog sections.

Table 2A. TYPICAL OFF ISOLATION REJECTION RATIO

Frequency	100kHz	500kHz	1MHz
One Channel Driven	74dB	72dB	66dB
All Channels Driven	64dB	48dB	44dB

Test Conditions: $V_{IN} = 20V_{PK-PK}$ at the tabulated frequency, $R_L = 1.5k$ between OUT and ground, EN = 0V.

$$OIRR = 20 \text{ Log } \frac{20V_{PK-PK}}{V_{OUT\ (PK-PK)}}$$

Table 2B. TYPICAL CROSSTALK REJECTION RATIO

Frequency	100kHz	500kHz	1MHz
R_L = 1.5k	70dB	68dB	64dB
R_L = 10k	62dB	46dB	42dB

Test Conditions: Specified R_L connected from OUT to ground, EN = +5V, $A_0 = A_1 = A_2$ = +5V (Channel 1 selected). $20V_{PK-PK}$ at the tabulated frequency is applied to Channel 2. All other channels are open circuited. Similar crosstalk rejection can be observed between any two channels.

Ordering Information (continued)

PART	TEMP. RANGE	PACKAGE
HI1-0508A-2	-55°C to +125°C	16 Lead CERDIP
HI1-0508A-5*	0°C to +75°C	16 Lead CERDIP
HI3-0508A-5*	0°C to +75°C	16 Lead Plastic DIP
HI1-0509A-2	-55°C to +125°C	16 Lead CERDIP
HI1-0509A-5*	0°C to +75°C	16 Lead CERDIP
HI3-0509A-5*	0°C to +75°C	16 Lead Plastic DIP

* Maxim burns in all devices at 150°C. Maxim's -5 device is therefore equivalent to the original manufacturer's -7 product.

Chip Topographies

MAX358
HI-508A

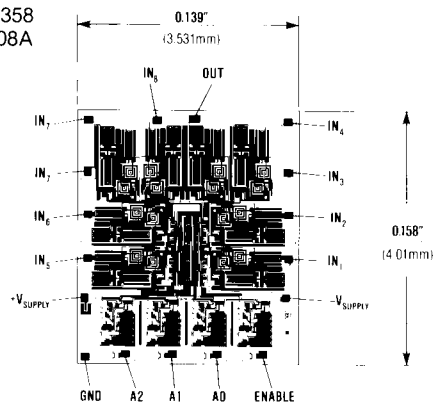

Note: Connect substrate to $+V_{SUPPLY}$ or Leave It Floating

MAX359
HI-509A

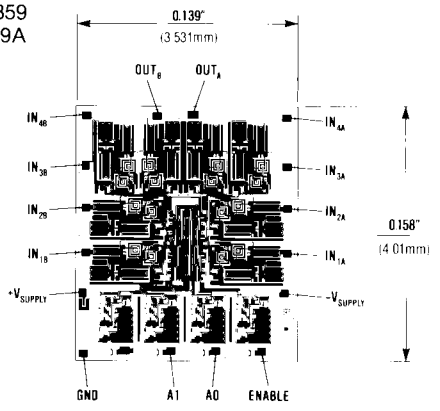

Note: Connect substrate to $+V_{SUPPLY}$ or Leave It Floating