MAX32620FTHR
Rapid Development Platform

Evaluates: MAX32620, MAX77650, MAX17055

General Description

The MAX32620FTHR board is a rapid development platform designed to help engineers quickly implement battery-optimized solutions with the MAX32620 Arm® Cortex®-M4 microcontroller with FPU. The board also includes the MAX77650 ultra-low power PMIC and MAX17055 fuel gauge to provide efficient power conversion and battery management with minimal board space. The form factor is a small 0.9in x 2.0in dual-row header footprint that is compatible with breadboards and off-the-shelf peripheral expansion boards. In addition to the dual-row headers, there are also two 12-pin Pmod™-compatible socket connectors for more expansion options. Also on board are common user-interface peripherals including two RGB indicator LEDs and two pushbuttons. These provide a power-optimized flexible platform for quick proofs-of-concept and early software development to enhance time to market.

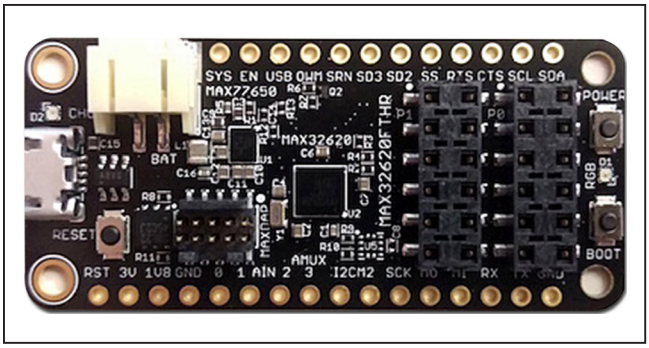

Visit **https://developer.mbed.org/platforms/MAX32620FTHR/** to start developing with this board.

***Ordering Information* appears at end of data sheet.**

Arm and Cortex are registered trademarks of Arm Limited (or its subsidiaries) in the US and/or elsewhere.

Pmod is a trademark of Diligent Inc.

Benefits and Features

- Convenient Development Platform
  - 0.9in x 2.0in DIP Form Factor
    - Breadboard Compatible
    - Feather Wing Compatible
  - Pmod-Compatible Sockets
    - Supports SPI, UART, I2C, and GPIO
    - Accessible from Both Sides of Board
  - Integrated Battery Management
    - Single-Cell Li+ Charger
    - Fuel Gauge
  - User Interface Peripherals
    - Two RGB LEDs
    - Two Pushbuttons
- MAX32620 Microcontroller Features
  - 96MHz Arm Cortex-M4 Microcontroller with FPU
  - 2048KB Flash
  - 256KB SRAM
  - Full-Speed USB
  - SPI, I2C, UART, and 1-Wire
  - 4-Channel 10-Bit ADC
  - 49 Dual Voltage GPIO
  - 3.9mm x 4.1mm, 81-Bump WLP
- MAX77650 Ultra-Low Power PMIC Features
  - Smart Power Selector Charger
    - Supports Li+/Li-Poly Batteries
    - 7.5mA to 300mA Charge Current
  - Single Inductor Multiple Output (SIMO) Buck-Boost Regulator
    - 3 Outputs from a Single Inductor
  - 150mA LDO Regulator
  - I2C Configurable
  - 2.75mm x 2.15mm, 30-Bump WLP
- MAX17055 Fuel Gauge Features
  - ModelGauge m5 EZ
    - Eliminates Battery Characterization
    - Eliminates Coulomb Counter Drift
  - 7µA Operating Current
  - 1.4mm x 1.5mm, 9-Bump WLP

319-100108; Rev 0; 11/17

maxim integrated™

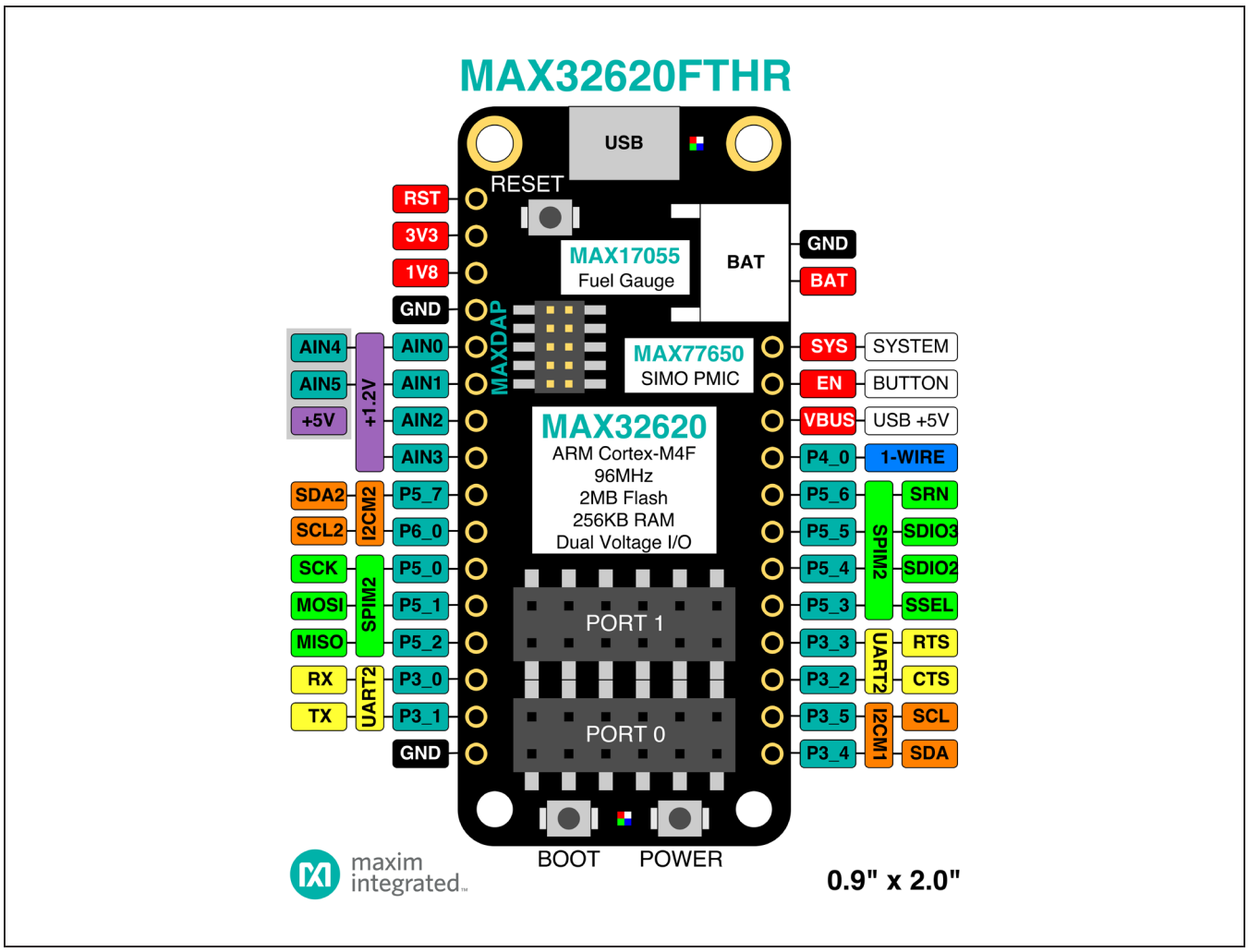

Figure 1. DIP Pinout

Detailed Description

The MAX32620FTHR board is designed to provide a compact, power-optimized, rapid development platform. It provides all the basic system management functions for the MAX32620 Arm Cortex-M4 microcontroller, as well as a few simple user-interface elements and a variety of expansion options for customization. The dual inline pinout and form-factor for this board are based on the Adafruit feather series of boards. It is intended to be compatible with many of their peripheral wings, but it is not guaranteed to work with all featherwings.

Firmware Development

The simplest way to develop firmware for the MAX32620FTHR board is through the mbed development site. At the mbed site, import examples into their online IDE, edit, compile, and load them into the board without installing any software. The board is preloaded with a USB bootloader that enables drag-and-drop firmware updates by pressing the BOOT button when exiting reset. Go to **https://developer.mbed.org/platforms/MAX32630FTHR/** to start programming. Additional tools are also available at the Maxim product page **www.maximintegrated.com/max32620fthr**.

Power Architecture

The MAX32620FTHR is optimized for battery-powered operation, but a battery is not required. The MAX77650 PMIC includes a Smart Power Selector™ that allows the system to run directly from the charging source that comes from the Micro-USB connector. The MAX77650 also includes a configurable Li+/Li-Poly charger optimized for small batteries. The charge current is programmable from 7.5mA to 300mA.

The MAX77650 provides all the voltages needed to operate the MAX32620 efficiently with a single inductor multiple output (SIMO) buck-boost regulator. The SIMO regulator provides 1.2V, 1.8V, and 3.15V by default, and these voltages can be adjusted over the I2C interface.

In addition to the battery charger and SIMO buck-boost regulator, the MAX77650 PMIC also includes a 3-channel current sink driver, and power button monitor. The power button is available for user input after the part has powered on. The MAX32620FTHR board includes a pushbutton connected to the button input and an RGB LED connected to the current sinks for additional user-interface options.

The MAX32620FTHR board also includes the MAX17055 fuel gauge that utilizes Maxim's ModelGauge™ m5 EZ to accurately track the state of the battery without characterization.

Expansion Connectors

The MAX32620FTHR makes connecting peripherals as easy as possible by extending common peripheral interfaces. The form factor is based on the Adafruit feather series that has a variety of peripheral wings available and is also breadboard compatible. The board also includes two Pmod-compatible pass-through socket connectors. The pass-through sockets allow connections from either side of the board to add flexibility for mechanical access and allows the top and bottom row to be swapped to accommodate different types of Pmod interfaces. Pinout diagrams and tables of pin descriptions are provided for reference.

Table 1. DIP Header J4 Pins

PIN	PORT	DESCRIPTION
1	GND	Ground
2	P3_1	UART2 Tx
3	P3_0	UART2 Rx
4	P5_2	SPIM2 MISO
5	P5_1	SPIM2 MOSI
6	P5_0	SPIM2 SCK
7	P6_0	I2CM2 SCL, pulled to 1.8V, connected to the MAX77650 and MAX17055
8	P5_7	I2CM2 SDA
9	AIN_3	ADC analog input (0V–1.8V)
10	AIN_2	ADC analog input (0V–1.8V)
11	AIN_1	ADC analog input (0V–5V)
12	AIN_0	ADC analog input (0V–5V)
13	GND	Ground
14	1V8	1.8V supply voltage (output)
15	3V3	3V supply voltage (output)
16	RSTN	Master reset signal

Table 2. DIP Header J5 Pins

PIN	PORT	DESCRIPTION
1	SYS	System power output
2	$\overline{EN}$	Active-low power button
3	VBUS	This is connected directly to the power pin of the Micro-USB connector
4	P4_0	1-Wire® master signal
5	P5_6	SPIM2 SRN
6	P5_5	SPIM2 SDIO3
7	P5_4	SPIM2 SDIO2
8	P5_3	SPIM2 SSEL
9	P3_3	UART2 RTS
10	P3_2	UART2 CTS
11	P3_5	I2CM1 SCL
12	P3_4	I2CM1 SDA

Smart Power Selector and ModelGauge are trademarks and 1-Wire is a registered trademark of Maxim Integrated Products, Inc.

Table 3. SPI Slave P4 Surface Pads

PIN	PORT	DESCRIPTION
1	P4_7	SPIS SSEL
2	P4_5	SPIS MOSI
3	P4_6	SPIS MISO
4	P4_4	SPIS SCK
5	GND	Ground
6	AIN_0	ADC analog input (for voltage detection)

Table 4. Pmod Socket P0 Pins

PIN	PORT	DESCRIPTION
1	P0_2	UART0 CTS
2	P0_7	SPIM0 SSEL
3	P0_1	UART0 Tx
4	P0_5	SPIM0 MOSI
5	P0_0	UART0 Rx
6	P0_6	SPIM0 MISO
7	P0_3	UART0 RTS
8	P0_4	SPIM0 SCK
9	GND	Ground
10	GND	Ground
11	PVIO	Peripheral I/O voltage (3V by default)
12	PVIO	Peripheral I/O voltage (3V by default)

Table 5. Pmod Socket P1 Pins

PIN	PORT	DESCRIPTION
1	P1_3	SPIM1 SSEL
2	P1_4	SPIM1 SDIO2
3	P1_1	SPIM1 MOSI
4	P1_5	SPIM1 SDIO3
5	P1_2	SPIM1 MISO
6	P1_7	I2CM0 SCL
7	P1_0	SPIM1 SCK
8	P1_6	I2CM0 SDA
9	GND	Ground
10	GND	Ground
11	PVIO	Peripheral I/O voltage (3V by default)
12	PVIO	Peripheral I/O voltage (3V by default)

Table 6. On-Board Resources

PORT	SIGNAL	DESCRIPTION
P2_0	DBG_RX	Debug console Rx
P2_1	DBG_TX	Debug console Tx
P2_2	PHLD	MAX77650 power hold
P2_3	IRQ	MAX77650 $\overline{\text{IRQ}}$, active-low, open-drain
P2_4	LED1	Red LED (D1)
P2_5	LED2	Green LED (D1)
P2_6	LED3	Blue LED (D1)
P2_7	BOOT	User pushbutton, active-low, activates bootloader when pressed while reset is released
P3_6	ALRT	MAX17055 alert, active-low, open-drain
P5_7	SDA	1.8V I^2C SDA for MAX77650 and MAX17055
P6_0	SCL	1.8V I^2C SCL for MAX77650 and MAX17055

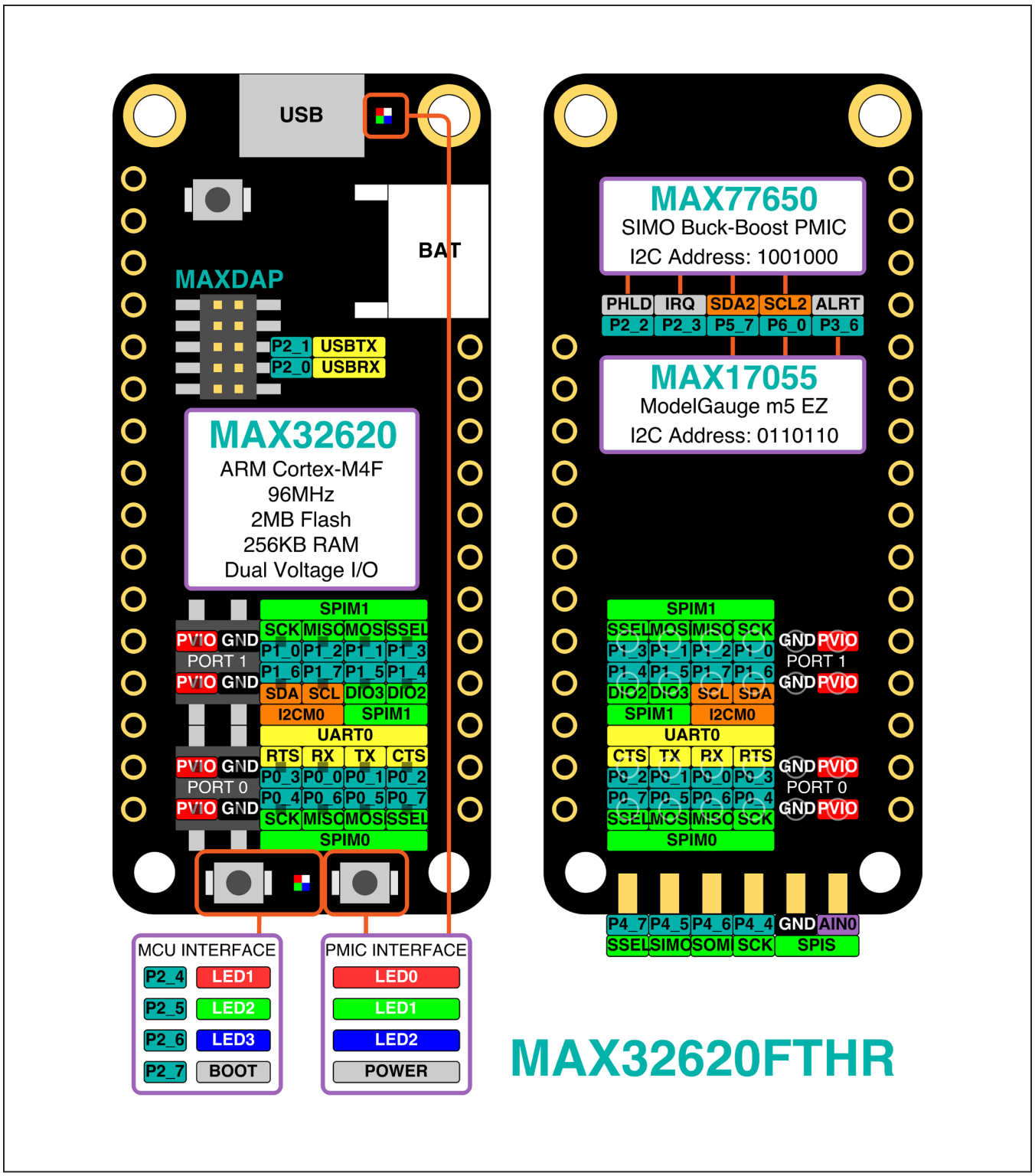

Figure 2. Peripherals

Peripheral Module Connectors

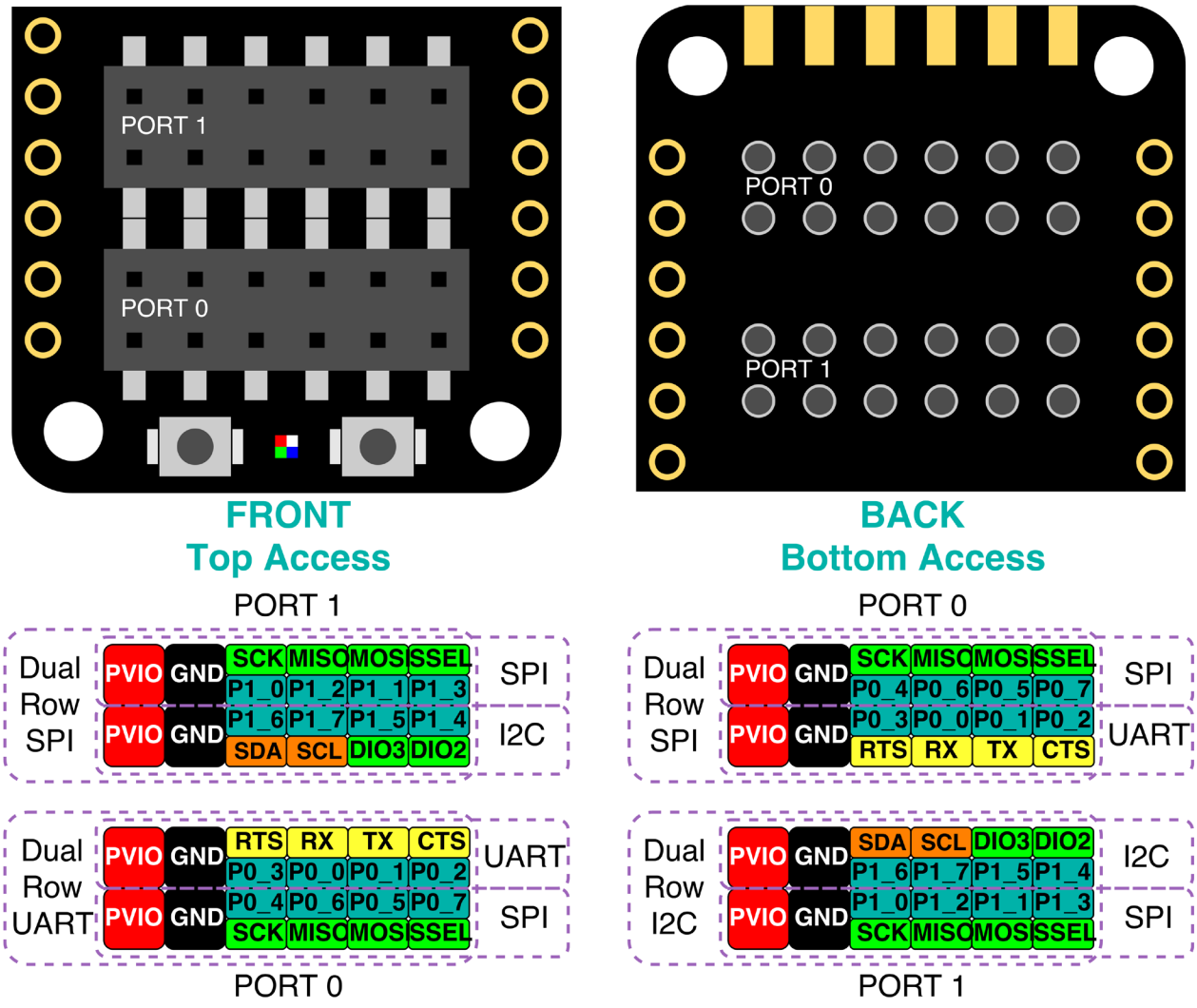

Figure 3. Pmod Port Pinouts

MAX32620FTHR EV Kit Bill of Materials

QTY	REF DES	MFG	PART NUMBER	DESCRIPTION
1	U2	Maxim	MAX32620IWG+	Arm Cortex M4F, 2MB Flash, 256KB SRAM
3	SW1, SW2, SW3	Omron	B3U-1000P	Tactile Switch, SPST-NO, 3x2.5mm
2	C1, C18	Yageo	CC0402KRX7R8BB104	CAP CER 0.1µF 25V X7R 0402
1	R3	Yageo	RC0402FR-071K1L	RES SMD 1.1KΩ 1% 1/16W 0402
1	R4	Yageo	RC0402FR-071K4L	RES SMD 1.4KΩ 1% 1/16W 0402
1	L1	Murata	DFE201612P-1R5M = P2	FIXED IND 1.5UH 2.7A 95 MOHM SMD 0806
1	R6	Yageo	RC0402FR-0710RL	RES SMD 10Ω 1% 1/16W 0402
1	R7	Yageo	RC0402FR-07100KL	RES SMD 100KΩ 1% 1/16W 0402
3	R1, R11, R12	Yageo	RC0402FR-0710KL	RES SMD 10KΩ 1% 1/16W 0402
5	C2, C4, C6, C7, C13	Yageo	CC0402MRX5R5BB106	CAP CER 10µF 6.3V X5R 0402
4	C3, C9, C15, C17	TDK	C1005X5R1V225K050BC	CAP CER 2.2µF 35V X5R 0402
4	C5, C10, C11, C12	Samsung	CL05A226MQ5QUNC	CAP CER 22µF 6.3V X5R 0402
3	R2, R9, R10	Yageo	RC0402FR-073K09L	RES SMD 3.09KΩ 1% 1/16W 0402
1	Y1	ECS Inc	ECS-.327-6-12-TR	CRYSTAL 32.7680KHZ 6PF SMD, 2x1.2mm
1	C16	Yageo	CC0402KRX7R9BB332	CAP CER 3300PF 50V X7R 0402
1	J3	Samtec	FTSH-105-01-F-DV-K-P-TR	CONN HEADER 2x5 .05” SMD KEY
1	U3	Maxim	DS28EL22Q+U	IC EEPROM 2KBIT 1WIRE 6TDFN
1	J2	JST	S2B-PH-SM4-TB(LF)(SN)	CONN HEADER PH SIDE 2POS 2MM SMD
1	U4	Maxim	MAX3207EAUT+T	ESD Diode with TVS
1	U1	Maxim	MAX77650BEWV+T	Ultra-Low Power PMIC with 3-Output SIMO and Charger
1	R5	Murata	NCP15XH103F03RC	NTC THERMISTOR 10KΩ 1% 0402
2	P0, P1	Samtec	HLE-106-02-F-DV-BE-K-TR	Conn Socket Strip SKT 12 POS 2.54mm Solder ST SMD T/R
1	Q2	Nexperia	PMZ600UNEYL	N-Channel 20V 600mA (Ta) 360mW (Ta), 2.7W (Tc) Surface Mount DFN1006-3
2	D1, D2	Lumex	SML-LX0404SIUPGUSB	Red, Green, Blue (RGB) LED Indication - Discrete 1.95V Red, 2.85V Green, 2.73V Blue 0404 (1010 Metric)
1	J1	FCI	10118193-0001LF	CONN USB MICRO B RECPT SMT R/A
1	R14	Panasonic	ERJ-2BWFR050X	RES SMD 0.05Ω 1% 1/4W 0402
1	U5	Maxim	MAX17055EWL+	IC FUEL GAUGE MODELGAUGE 9-WLP
1	R8	Yageo	RC0402JR-07470RL	RES SMD 470Ω 5% 1/16W 0402

MAX32620FTHR EV Kit Schematics

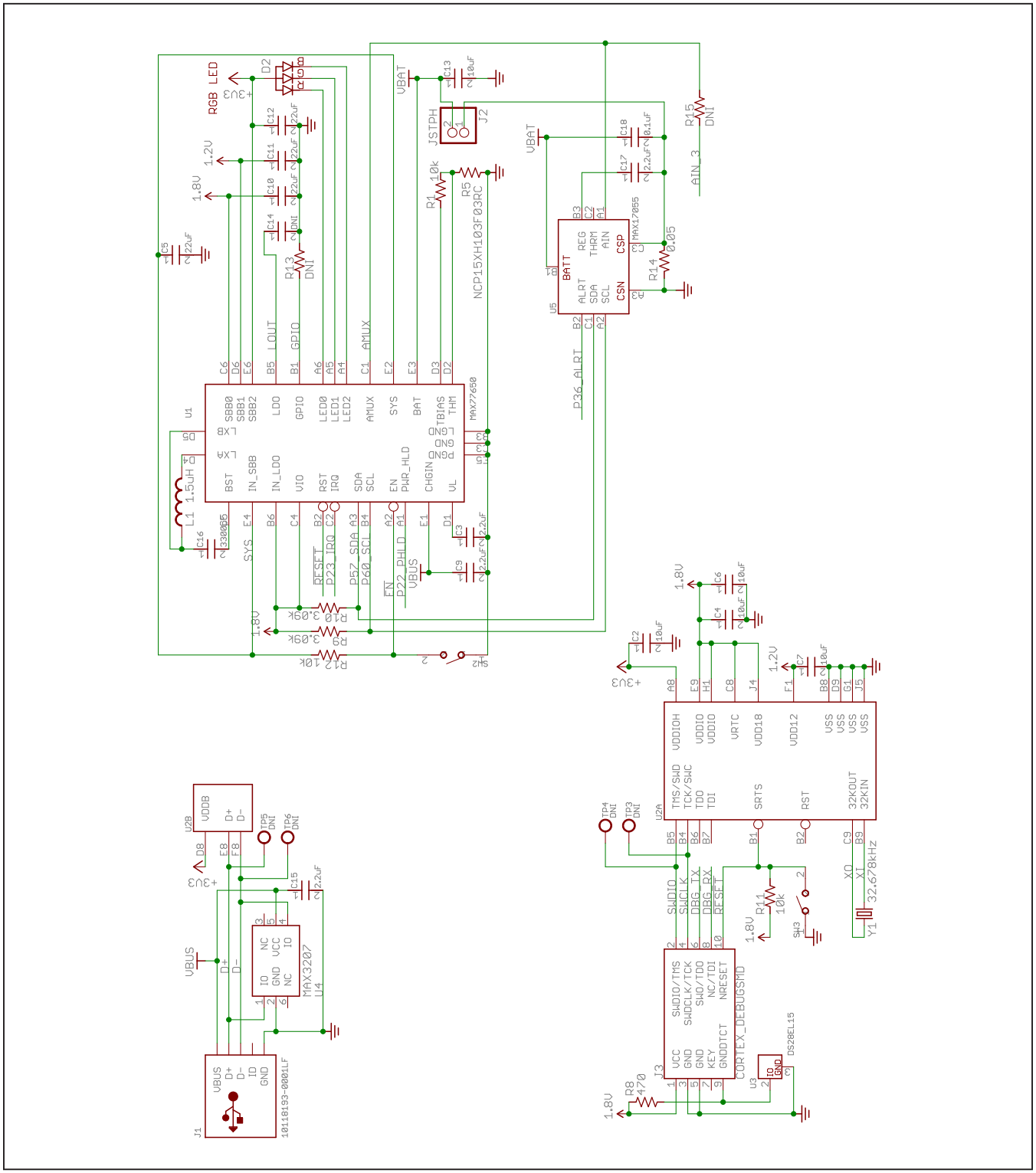

MAX32620FTHR EV Kit Schematics (continued)

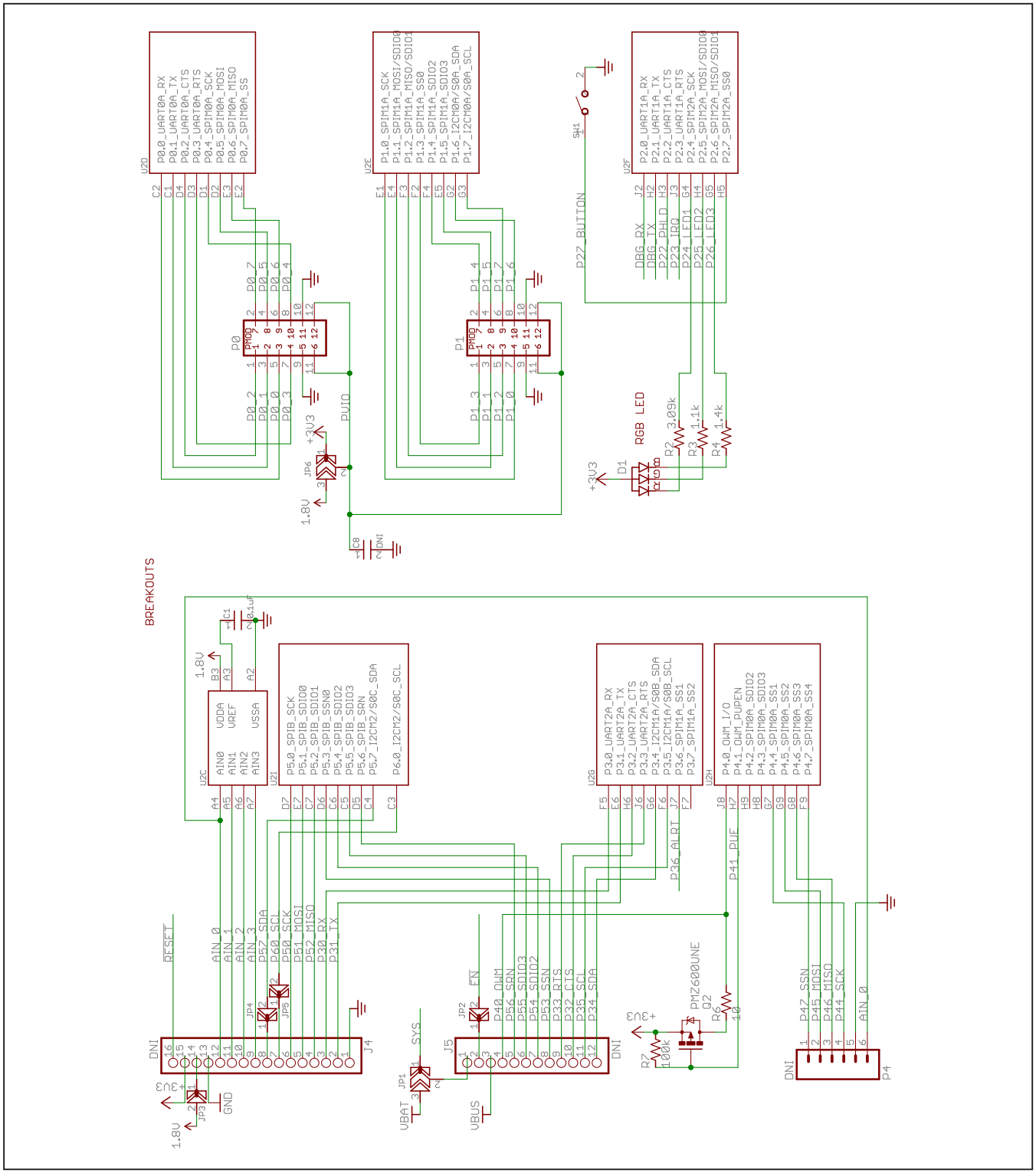

Ordering Information

PART	TYPE
MAX32620FTHR#	Development Platform

#Denotes RoHS compliance.

Revision History

REVISION NUMBER	REVISION DATE	DESCRIPTION	PAGES CHANGED
0	11/17	Initial release	—

For pricing, delivery, and ordering information, please contact Maxim Direct at 1-888-629-4642, or visit Maxim Integrated's website at www.maximintegrated.com.

Maxim Integrated cannot assume responsibility for use of any circuitry other than circuitry entirely embodied in a Maxim Integrated product. No circuit patent licenses are implied. Maxim Integrated reserves the right to change the circuitry and specifications without notice at any time.