MAX3250

±50V Isolated, 3.0V to 5.5V, 250kbps, 2 Tx/2 Rx, RS-232 Transceiver

General Description

The MAX3250 is a 3.0V to 5.5V powered, ±50V isolated EIA/TIA-232 and V.28/V.24 communications interface with high data-rate capabilities. The MAX3250 is a dual die part that operates with up to ±50V difference between the RS-232 side and the logic side (ISOCOM to GND). This makes the device ideal for operation in noisy conditions with high common-mode voltages. This feature prevents damage to the device if RS-232 lines are inadvertently short-circuited to a +24V or ±48V power bus.

The MAX3250 is powered by a single 3V to 5.5V supply on the logic side. Power is transferred from the logic side to the isolated side by ±100V external capacitors.

The MAX3250 has two receivers (Rx) and two drivers (Tx) and is guaranteed to run at data rates of 250kbps while maintaining RS-232 output levels. The transceivers have a proprietary low-dropout transmitter output stage, delivering true RS-232 performance from a 3V to 5.5V supply with a dual charge pump. The device features a $\overline{\text{FAULT}}$ open-drain output to signal an excessive isolated-side voltage condition on any of the RS-232 inputs. This output can drive an alarm LED or can be monitored by the processor to prevent operation under these conditions. The receiver outputs are high impedance in shutdown, allowing multiple interfaces (IrDA, RS-232, RS-485) to be connected to the same UART.

The MAX3250 is available in a space-saving 28-pin SSOP package.

Applications

Industrial Control

Programmable Logic Controller

Point-of-Sale Equipment

PC-to-Router Connections

Diagnostic Ports

Telecom Equipment

Ordering Information

PART	TEMP RANGE	PIN-PACKAGE
MAX3250CAI+	0°C to +70°C	28 SSOP
MAX3250EAI+	-40°C to +85°C	28 SSOP

+Denotes a lead(Pb)-free/RoHS-compliant package.

Typical Operating Circuit appears at end of data sheet.

Benefits and Features

- Isolation Breaks Ground Loops Due to High Common-Mode Voltages While Maintaining Data Rate
  - ±50V Isolation
  - 250kbps Guaranteed Data Rate
  - $\overline{\text{FAULT}}$ Output Signals Excessive Isolated-Side Voltage
- Integration of Isolation and RS-232 Saves Space
  - SSOP Package
- Shutdown Allows Multiple Interfaces (IrDA, RS-232, RS-485) to be Connected to the Same UART
  - High-Impedance Transmitter and Receiver Outputs in Shutdown
  - 20µA Supply Current in Shutdown
- Inductorless/Transformerless Design Simplifies EMI Compliance
- Low-Cost Replacement for Opto-Isolated Transceivers
- Meets EIA/TIA-232 Specifications Down to 3.0V

Pin Configuration

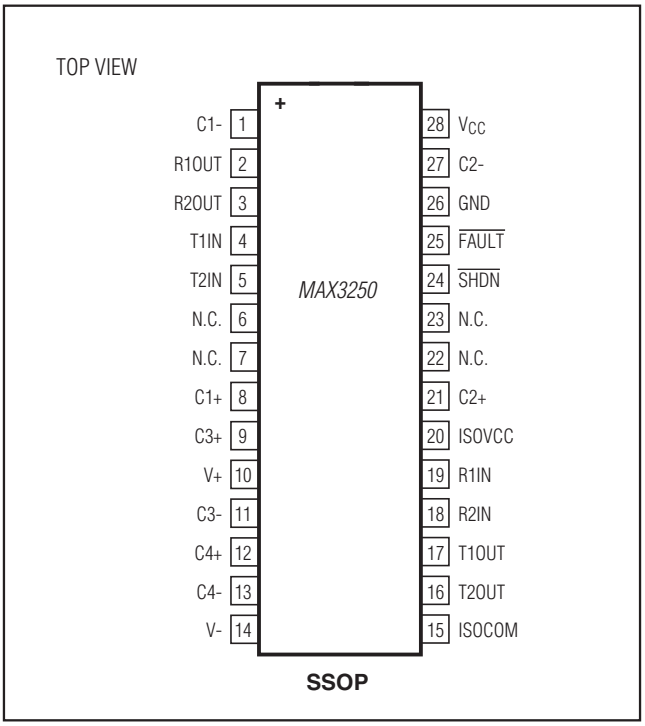

maxim integrated™

Absolute Maximum Ratings

(All voltages referenced to GND, unless otherwise noted.)
V_{CC} .....-0.3V to +6V
ISOCOM.....±80V
ISOVCC to ISOCOM.....-0.3V to +6V
V+ to ISOCOM (Note 1).....-0.3V to +7V
V- to ISOCOM (Note 1).....+0.3V to -7V
V+ + |V-| (Note 1) 13V
Input Voltages
T_IN, $\overline{SHDN}$ .....-0.3V to +6V
R_IN to ISOCOM.....±25V
Output Voltages
T_OUT to ISOCOM .....±13.2V
R_OUT.....-0.3V to (V_{CC} + 0.3V)
$\overline{FAULT}$.....-0.3V to +6V
C1-, C2-.....-0.3V to (V_{CC} + 0.3V)
C1+, C2+, C3+, C3-, C4+, C4- to ISOCOM .....-0.3V to (ISOVCC + 0.3V)
T_OUT Current .....30mA (continuous), 50mA (peak, 10µs)
R_IN Current.....30mA (continuous), 50mA (peak, 10µs)
ISOCOM Current .....30mA (continuous), 50mA (peak, 10µs)
Short-Circuit Duration T_OUT to ISOCOM .....Continuous
Continuous Power Dissipation (T_A = +70°C)
28-Pin SSOP (derate 15mW/°C above +70°C) 1201.2mW
Operating Temperature Ranges
MAX3250CAI .....0°C to +70°C
MAX3250EAI.....-40°C to +85°C
Storage Temperature Range .....-65°C to +150°C
Lead Temperature (soldering, 10s) .....+300°C
Soldering Temperature (reflow) .....+260°C

Note 1: V+ and V- can have a maximum magnitude of 7V, but their absolute difference cannot exceed 13V.

Stresses beyond those listed under "Absolute Maximum Ratings" may cause permanent damage to the device. These are stress ratings only, and functional operation of the device at these or any other conditions beyond those indicated in the operational sections of the specifications is not implied. Exposure to absolute maximum rating conditions for extended periods may affect device reliability.

Electrical Characteristics

(V_{CC} = 3.0V to 5.5V, see Typical Operating Circuit and Table 1 for capacitor values, ISOCOM = GND, T_A = T_{MIN} to T_{MAX}, unless otherwise noted. Typical values are at V_{CC} = 3.3V and T_A = +25°C.) (Note 2)

PARAMETER	CONDITIONS		MIN	TYP	MAX	UNITS
DC CHARACTERISTICS						
Supply Current	$\overline{SHDN}$ = V_{CC}, no load			15	35	mA
Supply Current Shutdown	$\overline{SHDN}$ = GND, V_{ISOCOM} = GND			20	45	µA
	$\overline{SHDN}$ = GND, V_{ISOCOM} = ±50V				±350	
Maximum Ground Differential	$\lvert V_{GND} - V_{ISOCOM} \rvert$				50	V
Isolation Resistance	Between GND and ISOCOM			60		kΩ
LOGIC INPUTS						
Input Logic Low	T_IN, $\overline{SHDN}$				0.8	V
Input Logic High	T_IN, $\overline{SHDN}$	V_{CC} = 3.3V	2.0			V
		V_{CC} = 5.0V	2.4			
Transmitter Input Hysteresis				0.5		V
Input Leakage Current	T_IN, $\overline{SHDN}$		-1	±0.01	+1	µA
RECEIVER OUTPUTS						
Output Leakage Current	$\overline{SHDN}$ = GND		-10	±0.05	+10	µA
Output-Voltage Low	I_{OUT} = 1.6mA				0.4	V
Output-Voltage High	I_{OUT} = -1.0mA		V_{CC} - 0.6	V_{CC} - 0.1		V
FAULT OUTPUT						
Output-Voltage Low (Open Drain)	I_{OUT} = 5mA				0.4	V
Output Leakage Current	$\overline{FAULT}$ not asserted				1	µA
$\overline{FAULT}$ Trip Level	$\lvert V_{GND} - V_{ISOCOM} \rvert$			55		V

Electrical Characteristics (continued)

(V_{CC} = 3.0V to 5.5V, see Typical Operating Circuit and Table 1 for capacitor values, ISOCOM = GND, T_A = T_{MIN} to T_{MAX}, unless otherwise noted. Typical values are at V_{CC} = 3.3V and T_A = +25°C.) (Note 2)

PARAMETER	CONDITIONS		MIN	TYP	MAX	UNITS
RECEIVER INPUTS (relative to ISOCOM)						
Input-Voltage Range			-25		+25	V
Input Threshold Low	T_A = +25°C	V_{CC} = 3.3V		1.2	0.6	V
		V_{CC} = 5.0V		1.3	0.8	
Input Threshold High	T_A = +25°C	V_{CC} = 3.3V	2.4	1.6		V
		V_{CC} = 5.0V	2.4	1.7		
Input Hysteresis				0.5		V
Input Resistance	T_A = +25°C		3	5	7	kΩ
TRANSMITTER OUTPUTS (relative to ISOCOM)						
Output-Voltage Swing	All transmitter outputs loaded with 3kΩ to ISOCOM, T_A = +25°C		±5.0	±5.4		V
Output Resistance	ISOVCC = V+ = V- = 0V, V_{T_OUT} = ±2V		300	10M		Ω
Output Short-Circuit Current			-60		+60	mA
Output Leakage Current	V_{CC} = 0 or 3V to 5.5V, V_{T_OUT} = ±12V, $\overline{SHDN}$ = GND		-25		+25	µA

Timing Characteristics

(V_{CC} = 3.0V to 5.5V, see Typical Operating Circuit and Table 1 for capacitor values, ISOCOM = GND, T_A = T_{MIN} to T_{MAX}, unless otherwise noted. Typical values are at V_{CC} = 3.3V and T_A = +25°C.)

PARAMETER	CONDITIONS		MIN	TYP	MAX	UNITS
Maximum Data Rate	R_L = 3kΩ, C_L = 1000pF to ISOCOM, one transmitter, T_A = +25°C		250			kbps
Receiver Propagation Delay	R_IN to R_OUT, C_L = 150pF to GND			0.4		µs
Receiver Skew	$\lvert t_{PHL} - t_{PLH} \rvert$			100		ns
Transmitter Skew	$\lvert t_{PHL} - t_{PLH} \rvert$ (Note 3)			120		ns
Transition-Region Slew Rate	V_{CC} = 3.3V, T_A = +25°C, R_L = 3kΩ to 7kΩ to ISOCOM, measured from +3V to -3V or -3V to +3V	C_L = 150pF to 1000pF to ISOCOM	6		30	V/µs
		C_L = 150pF to 2500pF to ISOCOM	4		30	
$\overline{FAULT}$ Propagation Delay				0.3		µs
Time to Shutdown				0.5		µs
Time to Exit Shutdown	V_{ISOCOM} = GND			300		µs
	V_{ISOCOM} = ±50V			350		

Note 2: All currents into the device are positive; all currents out of the device are negative. All voltages are referenced to device ground, unless otherwise noted.

Note 3: Transmitter skew is measured at the transmitter zero crosspoints.

Typical Operating Characteristics

(V_{CC} = 3.3V, 250kbps data rate, see Typical Operating Circuit and Table 1 for capacitor values, all transmitters loaded with 3kΩ and C_L to ISOCOM, T_A = +25°C, unless otherwise noted.)

TRANSMITTER OUTPUT VOLTAGE vs. LOAD CAPACITANCE

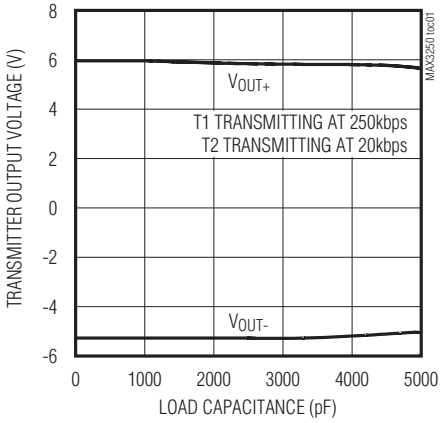

SLEW RATE vs. LOAD CAPACITANCE

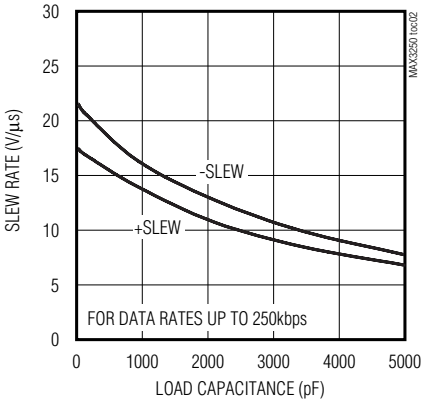

OPERATING SUPPLY CURRENT vs. LOAD CAPACITANCE

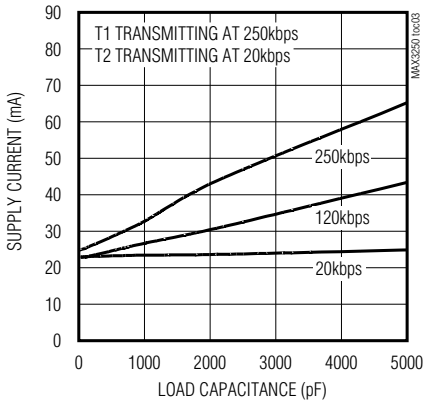

TIME TO EXIT SHUTDOWN
V_{ISOCOM} = 0V

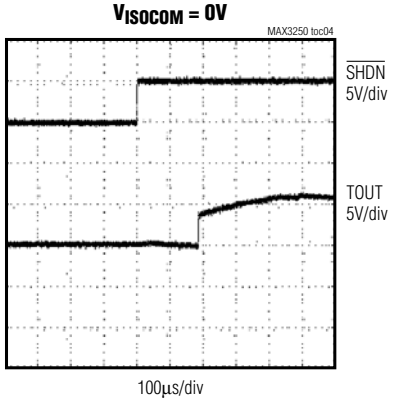

SHUTDOWN CURRENT vs. TEMPERATURE

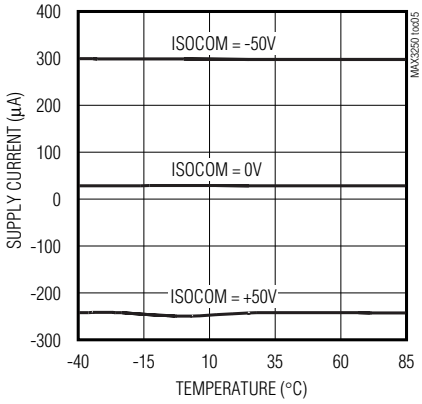

TRANSMITTER OUTPUT VOLTAGE vs. LOAD CAPACITANCE

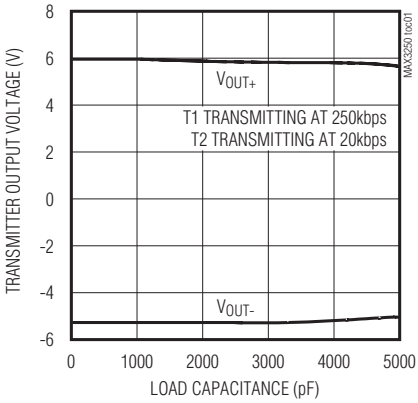

COMMON-MODE $\overline{FAULT}$ RESPONSE

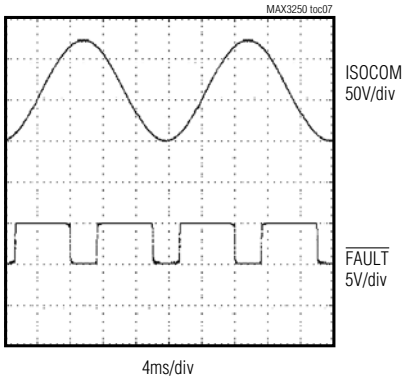

Pin Description

PIN	NAME	FUNCTION
1	C1-	Negative Terminal of the Power Isolation Capacitor. Connect a 100V capacitor from C1- to C1+. See Table 1 for values.
2	R1OUT	TTL/CMOS Receiver Output
3	R2OUT	TTL/CMOS Receiver Output
4	T1IN	TTL/CMOS Transmitter Input
5	T2IN	TTL/CMOS Transmitter Input
6, 22, 23	N.C.	No Connection. Not internally connected.
7	N.C.	No Connection. Leave unconnected or connect to ISOCOM.
8	C1+	Positive Terminal of the Power Isolation Capacitor. Connect a 100V capacitor from C1+ to C1-. See Table 1 for values.
9	C3+	Positive Terminal of the Voltage-Doubler Charge-Pump Capacitor. Connect a 0.1µF capacitor from C3+ to C3-.
10	V+	+5.5V Generated by the Charge Pump, Referenced to ISOCOM. Bypass V+ to ISOCOM with a 0.47µF capacitor.
11	C3-	Negative Terminal of the Voltage-Doubler Charge-Pump Capacitor. Connect a 0.1µF capacitor from C3- to C3+.
12	C4+	Positive Terminal of the Inverting Charge-Pump Capacitor. Connect a 0.47µF capacitor from C4+ to C4-.
13	C4-	Negative Terminal of the Inverting Charge-Pump Capacitor. Connect a 0.47µF capacitor from C4- to C4+.
14	V-	-5.5V Generated by the Charge Pump, Referenced to ISOCOM. Bypass V- to ISOCOM with a 0.47µF capacitor.
15	ISOCOM	Isolated Ground
16	T2OUT	RS-232 Transmitter Output
17	T1OUT	RS-232 Transmitter Output
18	R2IN	RS-232 Receiver Input
19	R1IN	RS-232 Receiver Input
20	ISOVCC	Internally Generated Isolated Power-Supply Voltage, Referenced to ISOCOM. Bypass ISOVCC to ISOCOM with a 2.2µF capacitor.
21	C2+	Positive Terminal of the Power Isolation Capacitor. Connect a 100V capacitor from C2+ to C2-. See Table 1 for values.
24	$\overline{SHDN}$	Shutdown Control. Drive $\overline{SHDN}$ low to enter low-power shutdown mode. Drive $\overline{SHDN}$ high or connect to V_{CC} for normal operation.
25	$\overline{FAULT}$	Overvoltage Indicator. Active low, open drain.
26	GND	Ground
27	C2-	Negative Terminal of the Power Isolation Capacitor. Connect a 100V capacitor from C2- to C2+. See Table 1 for values.
28	V_{CC}	3.0V to 5.5V Supply Voltage. Bypass V_{CC} to GND with a 1µF capacitor.

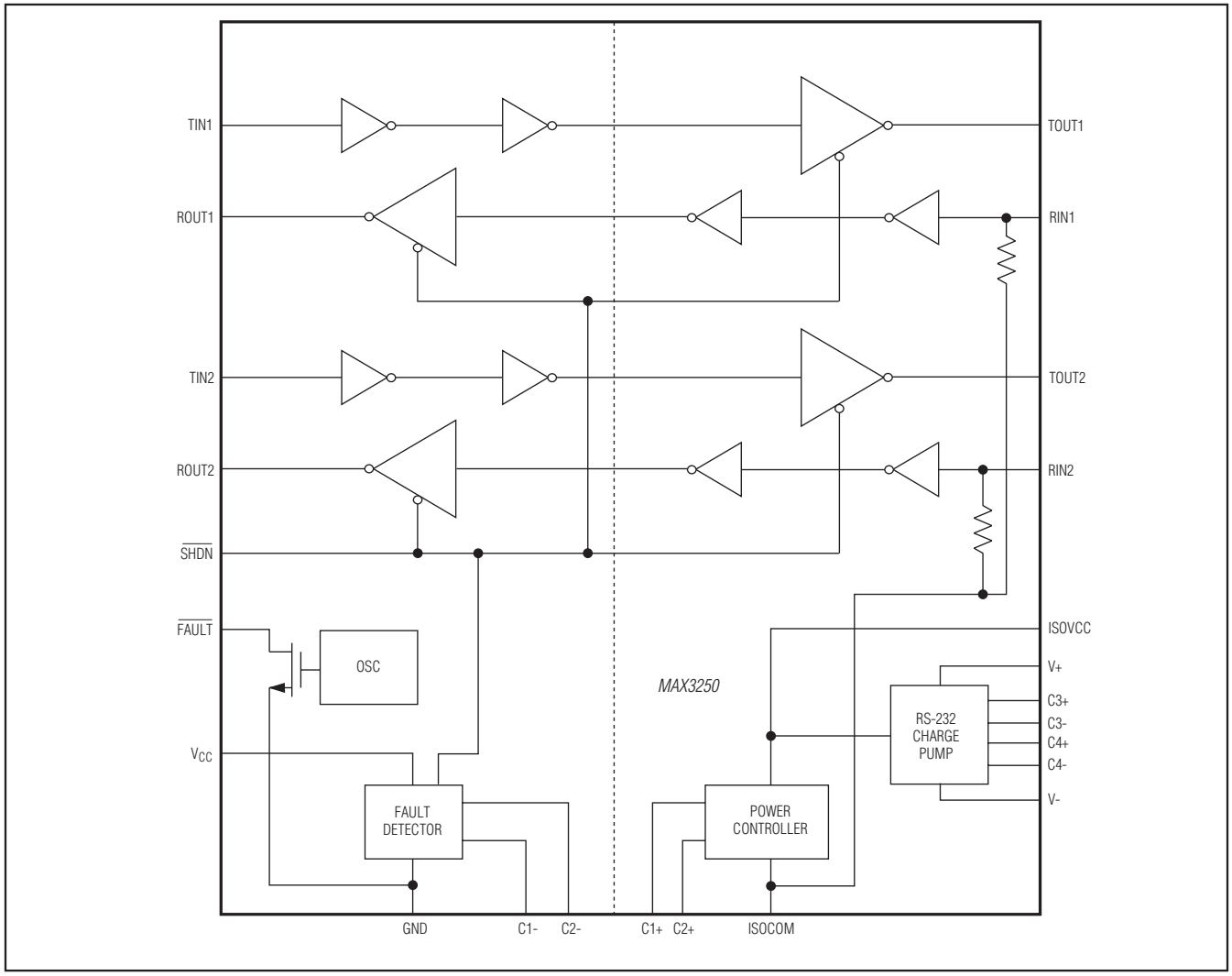

Figure 1. Functional Diagram

Detailed Description

The MAX3250 is a 3.0V to 5.5V powered, ±50V isolated EIA/TIA-232 and V.28/V.24 communications interface with high data-rate capabilities. The MAX3250 is a dual die part that operates with up to ±50V difference between the RS-232 side and the logic side (ISOCOM to GND). This makes the device ideal for operation in noisy conditions with high common-mode voltages. This feature prevents damage to the device if RS-232 lines are inadvertently short-circuited to a +24V or ±48V power bus.

The MAX3250 typically draws 15mA of supply current when unloaded. Supply current drops to 20µA when the device is placed in shutdown mode.

The MAX3250 has two receivers and two drivers and is guaranteed to operate at data rates up to 250kbps. The device features a $\overline{\text{FAULT}}$ open-drain output to signal an excessive isolated-side voltage condition on any of the RS-232 inputs. This output can drive an alarm LED or can be monitored by the processor to prevent operation under these conditions. The receiver outputs are high impedance in shutdown, allowing multiple interfaces (IrDA, RS-232, RS-485) to be connected to the same UART (Figure 1). The MAX3250 is a low-cost replacement for opto-isolated transceivers.

Isolated Power Supply

The MAX3250 drives a high-frequency square wave into C1 and a complementary square wave into C2. These

AC waveforms are rectified on the isolated side of the dual die to power its internal circuitry (ISOVCC). Capacitor C6 filters the output of the rectifier. See the *Typical Operating Circuit*.

The power controller works in a dual power mode. Power is maximum when the isolated power supply is below its regulation point. Power is reduced when the isolated power supply is above its regulation point.

Dual Charge-Pump Voltage Converter

The RS-232 drivers are powered from a regulated dual charge pump that provides output voltages of +5.5V (doubling charge pump) and -5.5V (inverting charge pump) relative to ISOCOM over the 3.0V to 5.5V V_{CC} range.

The charge pumps are powered from ISOVCC and operate in a discontinuous mode. If the output voltages are less than 5.5V, the charge pumps are enabled. If the output voltages exceed 5.5V, the charge pumps are disabled. Each charge pump requires a flying capacitor (C3, C4) and a reservoir capacitor (C7, C8) to generate the V+ and V- supplies.

RS-232 Transmitters

The transmitters are inverting level translators that convert TTL/CMOS-logic levels to ±5.0V EIA/TIA-232-compliant levels. They guarantee a 250kbps data rate with worst-case loads of 3kΩ in parallel with 1000pF to ISOCOM. In shutdown, the transmitters are disabled and the outputs are forced into a high-impedance state. When powered off or shut down, the outputs can be driven up to ±12V relative to ISOCOM. The transmitter inputs do not have pullup resistors. All unused inputs should be connected to V_{CC} or GND.

RS-232 Receivers

The receivers convert RS-232 signals to CMOS-logic output levels. The receivers' outputs are forced into a high-impedance state when the device is in shutdown. This allows a single UART to multiplex between different protocols.

Low-Power Shutdown Mode

Shutdown mode is obtained by driving $\overline{SHDN}$ low. In shutdown, the devices typically draw only 20µA of supply current and no power is transferred across the isolation capacitors. The charge pumps are disabled, and the receiver outputs and transmitter outputs are high impedance. When exiting shutdown the charge pumps and transmitter outputs are fully operational in typically 500µs (Figure 3). Connect $\overline{SHDN}$ to V_{CC} if the shutdown mode is not used.

Applications Information

Power Isolation Capacitors

The values for capacitors C1 and C2 are important for proper operation of the device. These capacitors should be 0.047µF for 4.5V to 5.5V operation, and 0.47µF for 3.0V to 3.6V operation. Smaller values result in insufficient supply voltage on the isolated side. Larger values are not allowed.

Capacitor C9 provides an AC feedback path for proper controller operation. Connect C9 from ISOCOM to GND.

The values for C1, C2, and C9 determine the maximum frequency and amplitude of the voltage difference between the local and isolated ground. Table 1 shows proper capacitance values.

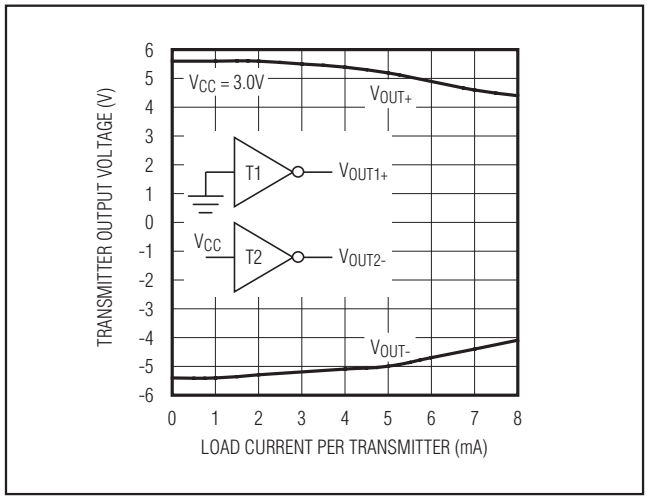

Figure 2. Transmitter Output Voltage vs. Load Current per Transmitter

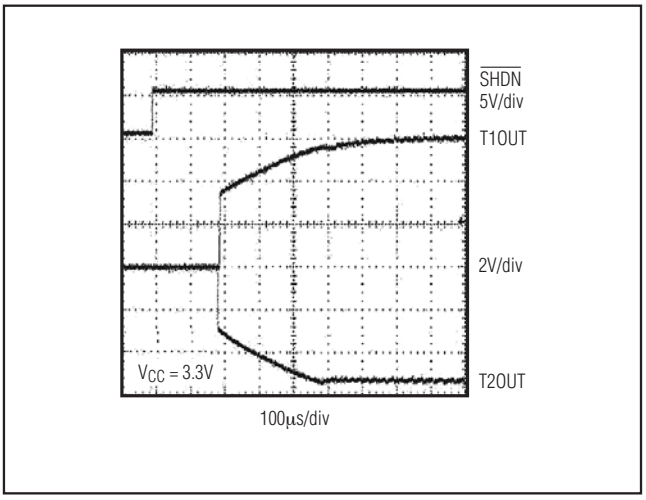

Figure 3. Transmitter Outputs when Exiting Shutdown or Powering Up

Table 1. Required Capacitor Values

V_{CC} (V)	C1, C2 (µF)	C3 (µF)	C4, C7, C8 (µF)	C5 (µF)	C6 (µF)	C9 (nF)
3.0 to 3.6	0.47	0.1	0.47	1	2.2	10
4.5 to 5.5	0.047	0.1	0.47	1	2.2	10

To achieve full isolation capability, C1, C2, and C9 should be rated for 100V or higher operation and be X7R or X5R type or metalized film dielectric. Y5V and Z5U dielectrics should be avoided as their voltage and temperature coefficients make their power-transfer capabilities insufficient.

Charge-Pump and Bypass Capacitors

Capacitors C3–C8 should be X7R or X5R type dielectric. Their voltage rating needs to be 10V or higher.

Layout Information

Because the MAX3250 is intended for systems requiring ±50V isolation, some consideration in component placement is necessary.

A 20mil air gap should isolate the logic side and the isolated RS-232 side, across the N.C. pins (pin numbers 6, 7, 22, and 23) of the MAX3250. The only components that cross this air gap should be C1, C2, and C9, which should all have a minimum 100V rating.

All capacitors should be located as close to the MAX3250 as possible.

Maximum Voltage Between ISOCOM and Logic GND

High values of applied isolation voltage and frequency can cause ripple on ISOVCC, V+, V-, and in extreme cases on V_{CC}. Therefore, it is recommended that the isolation-voltage and frequency be limited to the values shown in the *Typical Operating Characteristics*.

Insert a 1kΩ 1/4W resistor in series with any isolation test voltage when testing for maximum values of applied isolation voltage. Exceeding the maximum limits of voltage and frequency (see the *Typical Operating Characteristics*) could trigger a holding current in the internal ESD-protection device if the ±80V isolation limit is exceeded. This resistor should not be used in normal application.

Transmitter Outputs when Exiting Shutdown

Figure 3 shows two transmitter outputs when exiting shutdown mode. As they become active, the two transmitter outputs are shown going to opposite RS-232 levels (one transmitter input is high, the other is low). Each transmitter is loaded with 3kΩ in parallel with 2500pF. The transmitter outputs display no ringing or undesirable transients as they come out of shutdown. Note that the transmitters are enabled only when the magnitude of V- exceeds approximately -3V.

Typical Operating Circuit

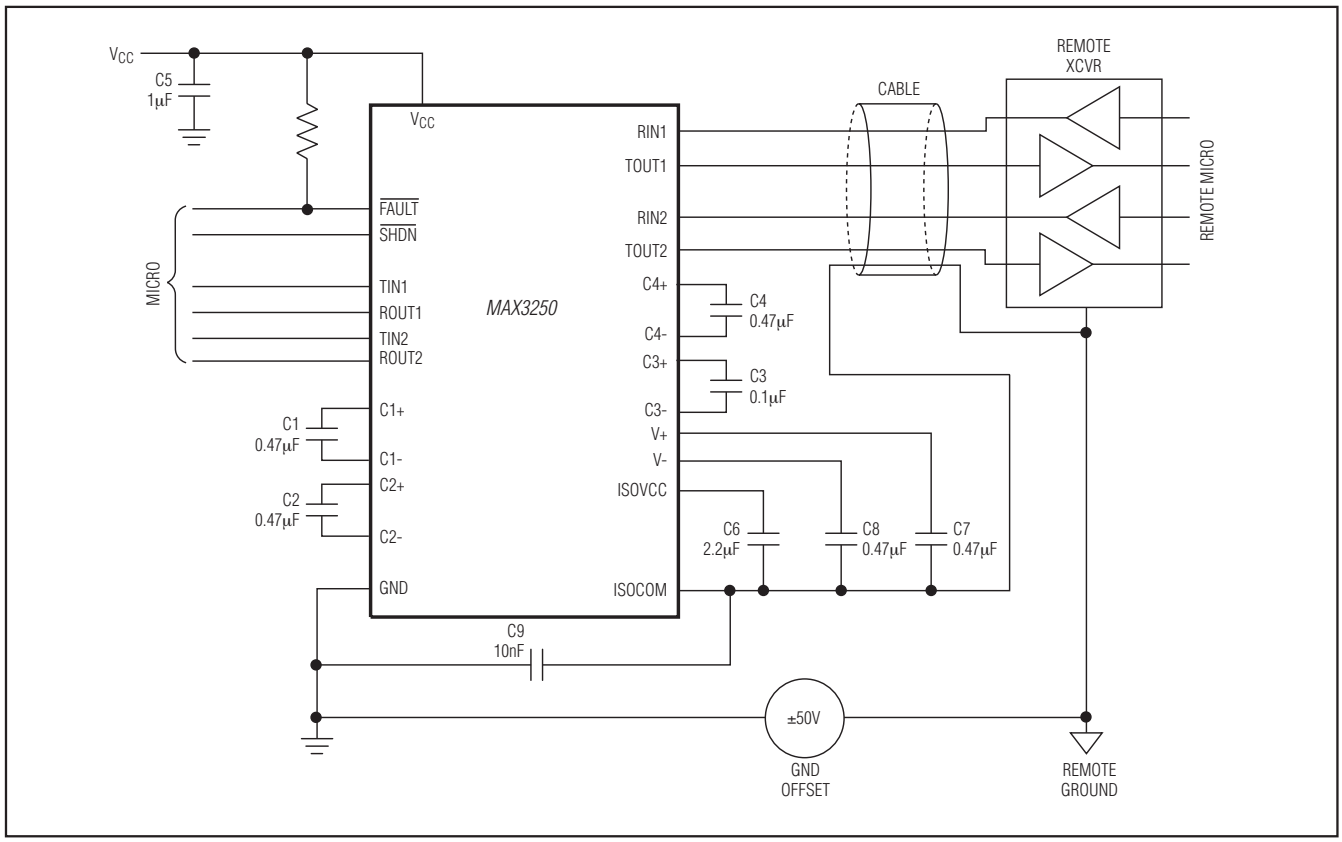

Chip Information

PROCESS: BiCMOS

Package Information

For the latest package outline information and land patterns (footprints), go to **www.maximintegrated.com/packages**. Note that a "+", "#", or "-" in the package code indicates RoHS status only. Package drawings may show a different suffix character, but the drawing pertains to the package regardless of RoHS status.

PACKAGE TYPE	PACKAGE CODE	OUTLINE NO.	LAND PATTERN NO.
28 SSOP	A28M+3	21-0056	90-0095

Revision History

REVISION NUMBER	REVISION DATE	DESCRIPTION	PAGES CHANGED
0	4/02	Initial release	—
1	2/03	Updated Design	—
2	1/08	Updated EC table	3
3	9/11	Added lead-free packaging information; corrected pin names, power dissipation, and soldering temperature in *Absolute Maximum Ratings*; updated capacitor values in data sheet.	1, 2, 3, 5–9
4	2/15	Updated *Benefits and Features* section	1

For pricing, delivery, and ordering information, please contact Maxim Direct at 1-888-629-4642, or visit Maxim Integrated's website at www.maximintegrated.com.

Maxim Integrated cannot assume responsibility for use of any circuitry other than circuitry entirely embodied in a Maxim Integrated product. No circuit patent licenses are implied. Maxim Integrated reserves the right to change the circuitry and specifications without notice at any time. The parametric values (min and max limits) shown in the Electrical Characteristics table are guaranteed. Other parametric values quoted in this data sheet are provided for guidance.

Maxim Integrated and the Maxim Integrated logo are trademarks of Maxim Integrated Products, Inc. © 2015 Maxim Integrated Products, Inc.