19-3250; Rev 1; 10/08

±15kV ESD-Protected +2.5V to +5.5V RS-232 Transceivers in UCSP and WLP

General Description

The MAX3230E/AE and MAX3231E/AE are +2.5V to +5.5V powered EIA/TIA-232 and V.28/V.24 communications interfaces with low power requirements, high data-rate capabilities, and enhanced electrostatic discharge (ESD) protection, in a chip-scale package (UCSP™) and WLP package. All transmitter outputs and receiver inputs are protected to ±15kV using IEC 1000-4-2 Air-Gap Discharge, ±8kV using IEC 1000-4-2 Contact Discharge, and ±15kV using the Human Body Model.

The MAX3230E/AE and MAX3231E/AE achieve a 1µA supply current with Maxim's AutoShutdown™ feature. They save power without changing the existing BIOS or operating systems by entering low-power shutdown mode when the RS-232 cable is disconnected, or when the transmitters of the connected peripherals are off.

The transceivers have a proprietary low-dropout transmitter output stage, delivering RS-232-compliant performance from a +3.1V to +5.5V supply, and RS-232-compatible performance with a supply voltage as low as +2.5V. The dual charge pump requires only four, small 0.1µF capacitors for operation from a +3.0V supply. Each device is guaranteed to run at data rates of 250kbps while maintaining RS-232 output levels.

The MAX3230E/AE and MAX3231E/AE offer a separate power-supply input for the logic interface, allowing configurable logic levels on the receiver outputs and transmitter inputs. Operating over a +1.65V to V_{CC} range, V_L provides the MAX3230E/AE and MAX3231E/AE compatibility with multiple logic families.

The MAX3231E/AE contains one receiver and one transmitter. The MAX3230E/AE contains two receivers and two transmitters. The MAX3230E/AE and MAX3231E/AE are available in tiny chip-scale and WLP packaging and are specified across the extended industrial (-40°C to +85°C) temperature range.

Applications

Personal Digital Assistants

Cell-Phone Data Lump Cables

Set-Top Boxes

Handheld Devices

Cell Phones

Typical Operating Circuits continued at end of data sheet.

Pin Configurations appear at end of data sheet.

UCSP is a trademark of Maxim Integrated Products, Inc.

AutoShutdown is a trademark of Maxim Integrated Products, Inc.

Features

- **6 x 5 Chip-Scale Package (UCSP) and WLP Package**
- **ESD Protection for RS-232 I/O Pins**
  ±15kV—IEC 1000-4-2 Air-Gap Discharge
  ±8kV—IEC 1000-4-2 Contact Discharge
  ±15kV—Human Body Model
- **1µA Low-Power AutoShutdown**
- **250kbps Guaranteed Data Rate**
- **Meet EIA/TIA-232 Specifications Down to +3.1V**
- **RS-232 Compatible to +2.5V Allows Operation from Single Li+ Cell**
- **Small 0.1µF Capacitors**
- **Configurable Logic Levels**

Ordering Information

PART	TEMP RANGE	BUMP-PACKAGE
MAX3230EEBV-T	-40°C to +85°C	6 x 5 UCSP
MAX3230AEEWV+-T	-40°C to +85°C	6 x 5 WLP
MAX3231EEBV-T	-40°C to +85°C	6 x 5 UCSP
MAX3231AEEWV+-T	-40°C to +85°C	6 x 5 WLP

+Denotes a lead-free/RoHS-compliant package.
T = Tape-and-reel.

Typical Operating Circuits

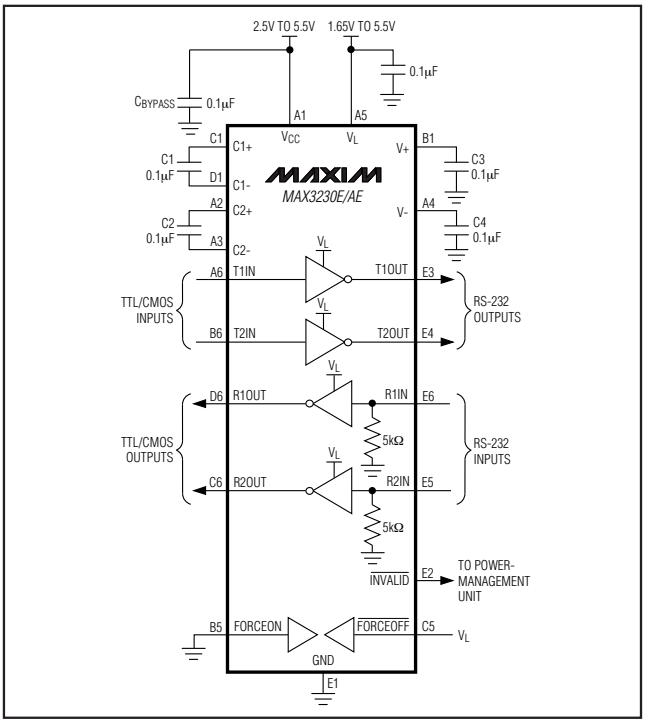

For pricing, delivery, and ordering information, please contact Maxim Direct at 1-888-629-4642, or visit Maxim's website at www.maxim-ic.com.

±15kV ESD-Protected +2.5V to +5.5V RS-232 Transceivers in UCSP and WLP

ABSOLUTE MAXIMUM RATINGS

V_{CC} to GND .....-0.3V to +6.0V
V+ to GND .....-0.3V to +7.0V
V- to GND .....+0.3V to -7.0V
V+ to |V-| (Note 1) .....+13V
V_L to GND .....-0.3V to +6.0V
Input Voltages
T_IN_, FORCEON, $\overline{FORCEOFF}$ to GND .....-0.3V to (V_L + 0.3V)
R_IN_ to GND .....±25V
Output Voltages
T_OUT to GND .....±13.2V
R_OUT $\overline{INVALID}$ to GND .....-0.3V to (V_L + 0.3V)
$\overline{INVALID}$ to GND .....-0.3V to (V_{CC} + 0.3V)
Short-Circuit Duration T_OUT to GND .....Continuous
Continuous Power Dissipation (T_A = +70°C)
6 × 5 UCSP (derate 10.1mW/°C above +70°C) 805mW
6 × 5 WLP (derate 20mW/°C above +70°C) 1.6W
Operating Temperature Range .....-40°C to +85°C
Junction Temperature .....+150°C
Storage Temperature Range .....-65°C to +150°C
Bump Temperature (soldering)
Infrared (15s) .....+200°C
Vapor Phase (20s) .....+215°C

Note 1: V+ and V- can have maximum magnitudes of 7V, but their absolute difference cannot exceed 13V.

Stresses beyond those listed under "Absolute Maximum Ratings" may cause permanent damage to the device. These are stress ratings only, and functional operation of the device at these or any other conditions beyond those indicated in the operational sections of the specifications is not implied. Exposure to absolute maximum rating conditions for extended periods may affect device reliability.

ELECTRICAL CHARACTERISTICS

(V_{CC} = +2.5V to +5.5V, V_L = +1.65V to +5.5V, C1–C4 = 0.1µF, tested at +3.3V ±10%, T_A = T_{MIN} to T_{MAX}. Typical values are at T_A = +25°C, unless otherwise noted.) (Note 2)

PARAMETER	SYMBOL	CONDITIONS	MIN	TYP	MAX	UNITS
DC CHARACTERISTICS						
V_L Input Voltage Range	V_L		1.65		V_{CC} + 0.3	V
V_{CC} Supply Current, AutoShutdown	I_{CC}	FORCEON = GND, $\overline{FORCEOFF}$ = V_L, all R_{IN} open			10	µA
		$\overline{FORCEOFF}$ = GND			10	
		FORCEON, $\overline{FORCEOFF}$ = V_L			1	mA
V_{CC} Supply Current, AutoShutdown Disabled	I_{CC}	FORCEON = $\overline{FORCEOFF}$ = V_L, no load		0.3	1	mA
V_L Supply Current	T_IN, I_L	FORCEON or $\overline{FORCEOFF}$ = GND or V_L, V_{CC} = V_L = +5V, no receivers switching		1		µA
LOGIC INPUTS						
Input-Logic Low		T_IN, FORCEON, $\overline{FORCEOFF}$			0.4	V
Input-Logic High		T_IN, FORCEON, $\overline{FORCEOFF}$	0.66 × V_L			V
Transmitter Input Hysteresis				0.5		V
Input Leakage Current		T_IN, FORCEON, $\overline{FORCEOFF}$		±0.01	±1	µA
RECEIVER OUTPUTS						
Output Leakage Currents		R_OUT, receivers disabled, $\overline{FORCEOFF}$ = GND or in AutoShutdown			±10	µA
Output-Voltage Low		I_{OUT} = 0.8mA			0.4	V
Output-Voltage High		I_{OUT} = -0.5mA	V_L - 0.4	V_L - 0.1		V

ELECTRICAL CHARACTERISTICS (continued)

(V_{CC} = +2.5V to +5.5V, V_L = +1.65V to +5.5V, C1–C4 = 0.1µF, tested at +3.3V ±10%, T_A = T_{MIN} to T_{MAX}. Typical values are at T_A = +25°C, unless otherwise noted.) (Note 2)

PARAMETER	SYMBOL	CONDITIONS		MIN	TYP	MAX	UNITS
RECEIVER INPUTS							
Input Voltage Range				-25		+25	V
Input-Threshold Low		T_A = +25°C	V_{CC} = +3.3V	0.6	1.2		V
			V_{CC} = +5.0V	0.8	1.7		
Input-Threshold High		T_A = +25°C	V_{CC} = +3.3V		1.3	2.4	V
			V_{CC} = +5.0V		1.8	2.4	
Input Hysteresis					0.5		V
Input Resistance				3	5	7	kΩ
AUTOMATIC SHUTDOWN							
Receiver Input Threshold to $\overline{\text{INVALID}}$ Output High		Figure 3a	Positive threshold			2.7	V
			Negative threshold	-2.7			
Receiver Input Threshold to $\overline{\text{INVALID}}$ Output Low				-0.3		+0.3	V
Receiver Positive or Negative Threshold to $\overline{\text{INVALID}}$ High	t_{INVH}	V_{CC} = +5.0V, Figure 3b			1		µs
Receiver Positive or Negative Threshold to $\overline{\text{INVALID}}$ Low	t_{INVL}	V_{CC} = +5.0V, Figure 3b			30		µs
Receiver Edge to Transmitters Enabled	t_{WU}	V_{CC} = +5.0V, Figure 3b			100		µs
INVALID OUTPUT							
Output-Voltage Low		I_{OUT} = 0.8mA				0.4	V
Output-Voltage High		I_{OUT} = -0.5mA		V_{CC} - 0.4		V_{CC} - 0.1	V
TRANSMITTER OUTPUTS							
V_{CC} Mode Switch Point (V_{CC} Falling)		T_OUT = ±5.0V to ±3.7V		2.85		3.10	V
V_{CC} Mode Switch Point (V_{CC} Rising)		T_OUT = ±3.7V to ±5.0V		3.3		3.7	V
V_{CC} Mode Switch-Point Hysteresis					400		mV
Output Voltage Swing		All transmitter outputs loaded with 3kΩ to ground	V_{CC} = +3.1V to +5.5V, V_{CC} falling, T_A = +25°C	±5	±5.4		V
			V_{CC} = +2.5V to +3.1V, V_{CC} rising	±3.7			
Output Resistance		V_{CC} = V+ = V- = 0, T_OUT = ±2V		300	10M		Ω
Output Short-Circuit Current						±60	mA
Output Leakage Current		T_OUT = ±12V, transmitters disabled				±25	µA
ESD PROTECTION							
R_IN, T_OUT		Human Body Model			±15		kV
		IEC 1000-4-2 Air-Gap Discharge			±15		
		IEC 1000-4-2 Contact Discharge			±8		

±15kV ESD-Protected +2.5V to +5.5V RS-232 Transceivers in UCSP and WLP

TIMING CHARACTERISTICS

(V_{CC} = +2.5V to +5.5V, V_L = +1.65V to +5.5V, C1–C4 = 0.1µF, tested at +3.3V ±10%, T_A = T_{MIN} to T_{MAX}. Typical values are at T_A = +25°C, unless otherwise noted.) (Note 2)

PARAMETER	SYMBOL	CONDITIONS	MIN	TYP	MAX	UNITS
Maximum Data Rate		R_L = 3kΩ, C_L = 1000pF, one transmitter switching	250			kbps
Receiver Propagation Delay		Receiver input to receiver output, C_L = 150pF		0.15		µs
Receiver-Output Enable Time		V_{CC} = V_L = +5V		200		ns
Receiver-Output Disable Time		V_{CC} = V_L = +5V		200		ns
Transmitter Skew	$\lvert t_{PHL} - t_{PLH} \rvert$			100		ns
Receiver Skew	$\lvert t_{PHL} - t_{PLH} \rvert$			50		ns
Transition-Region Slew Rate		R_L = 3kΩ to 7kΩ, C_L = 150pF to 1000pF, T_A = +25°C	6		30	V/µs

Note 2: V_{CC} must be greater than V_L.

Typical Operating Characteristics

(V_{CC} = +3.3V, 250kbps data rate, 0.1µF capacitors, all transmitters loaded with 3kΩ and C_L, T_A = +25°C, unless otherwise noted.)

TRANSMITTER OUTPUT VOLTAGE vs. LOAD CAPACITANCE

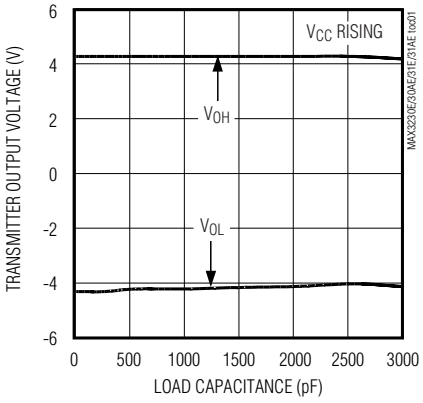

SLEW RATE vs. LOAD CAPACITANCE

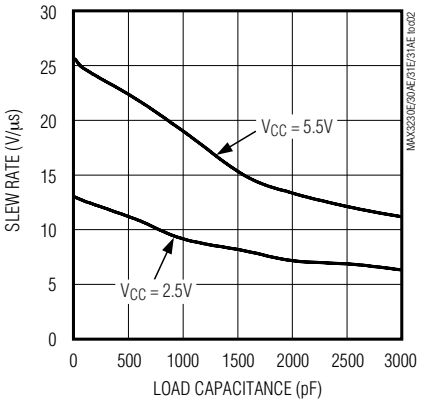

OPERATING SUPPLY CURRENT vs. LOAD CAPACITANCE (MAX3231E)

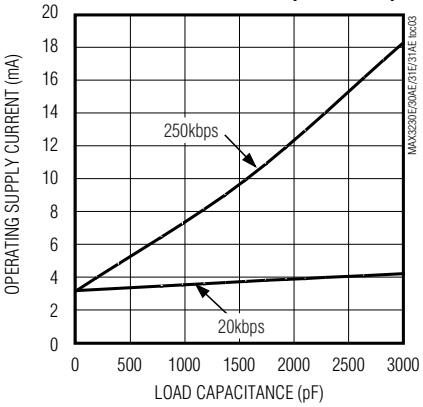

Typical Operating Characteristics (continued)

(V_{CC} = +3.3V, 250kbps data rate, 0.1µF capacitors, all transmitters loaded with 3kΩ and C_L, T_A = +25°C, unless otherwise noted.)

OPERATING SUPPLY CURRENT vs. SUPPLY VOLTAGE (MAX3231E)

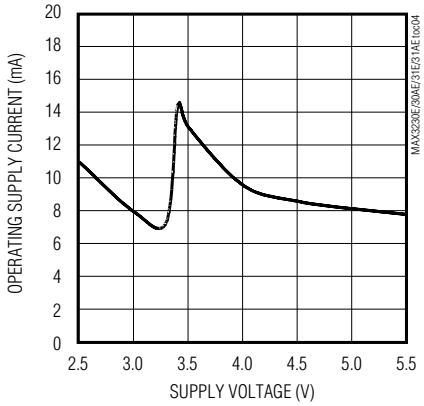

TRANSMITTER OUTPUT VOLTAGE vs. SUPPLY VOLTAGE (V_{CC} RISING)

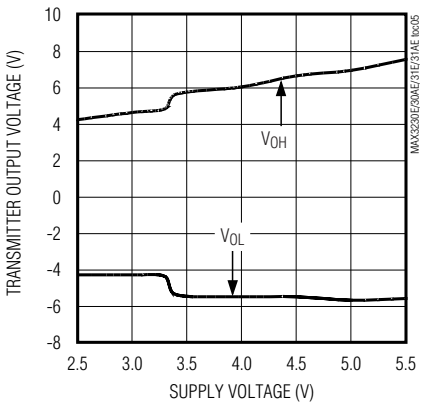

TRANSMITTER OUTPUT VOLTAGE vs. SUPPLY VOLTAGE (V_{CC} FALLING)

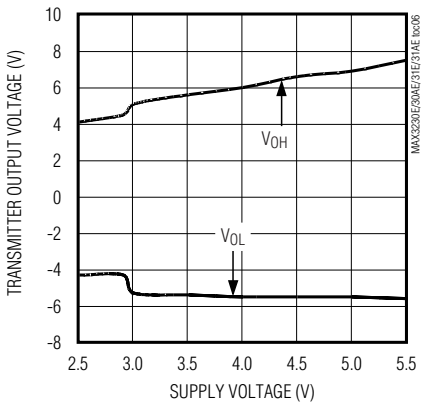

Pin Description

BUMP		NAME	FUNCTION
MAX3230E/ MAX3230AE	MAX3231E/ MAX3231AE		
A1	A1	V_{CC}	Supply Voltage. +2.5V to +5.5V supply voltage.
A2	A2	C2+	Inverting Charge-Pump Capacitor Positive Terminal
A3	A3	C2-	Inverting Charge-Pump Capacitor Negative Terminal
A4	A4	V-	Negative Charge-Pump Output. -5.5V/-4.0V generated by charge pump.
A5	A5	V_L	Logic Voltage Input. Logic-level input for receiver outputs and transmitter inputs. Connect V_L to the system-logic supply voltage or V_{CC} if no logic supply is required.
A6, B6	A6	T_IN	Transmitter Input(s)
B1	B1	V+	Positive Charge-Pump Output. +5.5V/+4.0V generated by charge pump. If charge pump is generating +4.0V, the device has switched from RS-232-compliant to RS-232-compatible mode.
B2, B3, B4, C2, C3, C4, D2–D5	B2, B3, B4, C2, C3, C4, D2–D5	N.C.	No Connection. The MAX3230E/MAX3231E are not populated with solder bumps at these locations. The MAX3230AE/MAX3231AE are populated with electrically isolated solder bumps at these locations.
B5	B5	FORCEON	Active High FORCEON Input. Drive FORCEON high to override automatic circuitry, keeping transmitters and charge pumps on.
C1	C1	C1+	Positive Regulated Charge-Pump Capacitor Positive Terminal
C5	C5	$\overline{\text{FORCEOFF}}$	Active-Low $\overline{\text{FORCEOFF}}$ Input. Drive $\overline{\text{FORCEOFF}}$ low to shut down transmitters, receivers, and on-board charge pump. This overrides all automatic circuitry and FORCEON.

±15kV ESD-Protected +2.5V to +5.5V RS-232 Transceivers in UCSP and WLP

Pin Description (continued)

BUMP		NAME	FUNCTION
MAX3230E/ MAX3230AE	MAX3231E/ MAX3231AE		
C6, D6	C6	R_OUT	Receiver Output(s)
D1	D1	C1-	Positive Regulated Charge-Pump Capacitor Negative Terminal
E1	E1	GND	Ground
E2	E2	$\overline{\text{INVALID}}$	Valid Signal-Detector Output. Output $\overline{\text{INVALID}}$ is enabled low if no valid RS-232 level is present on any receiver input.
E3, E4	E3	T_OUT	RS-232 Transmitter Output(s)
E5, E6	E5	R_IN	RS-232 Receiver Input(s)
—	B6, D6, E4, E6	N.C.	No Connection. These locations are populated with solder bumps, but are electrically isolated.

Detailed Description

Dual Mode™ Regulated Charge-Pump Voltage Converter

The MAX3230E/AE and MAX3231E/AE internal power supply consists of a dual-mode regulated charge pump. For supply voltages above +3.7V, the charge pump generates +5.5V at V+ and -5.5V at V-. The charge pumps operate in a discontinuous mode. If the output voltages are less than ±5.5V, the charge pumps are enabled. If the output voltages exceed ±5.5V, the charge pumps are disabled.

For supply voltages below +2.85V, the charge pump generates +4.0V at V+ and -4.0V at V-. The charge pumps operate in a discontinuous mode. If the output voltages are less than ±4.0V, the charge pumps are enabled. If the output voltages exceed ±4.0V, the charge pumps are disabled.

Each charge pump requires a flying capacitor (C1, C2) and a reservoir capacitor (C3, C4) to generate the V+ and V- supply voltages.

Voltage Generation in the Switchover Region

The MAX3230E/AE and MAX3231E/AE include a switchover circuit between these two modes that have approximately 400mV of hysteresis around the switchover point. The hysteresis is shown in Figure 1. This large hysteresis eliminates mode changes due to power-supply bounce.

For example, a three-cell NiMh battery system starts at V_{CC} = +3.6V, and the charge pump generates an output voltage of ±5.5V. As the battery discharges, the MAX3230E/AE and MAX3231E/AE maintain the outputs in regulation until the battery voltage drops below +3.1V. The output regulation points then change to ±4.0V.

When V_{CC} is rising, the charge pump generates an output voltage of ±4.0V, while V_{CC} is between +2.5V and +3.5V. When V_{CC} rises above the switchover voltage of +3.5V, the charge pump switches modes to generate an output of ±5.5V.

Table 1 shows different supply schemes and their operating voltage ranges.

RS-232 Transmitters

The transmitters are inverting level translators that convert CMOS logic levels to RS-232 levels. The MAX3230E/AE and MAX3231E/AE automatically reduce the RS-232-compliant levels (±5.5V) to RS-232-compatible levels (±4.0V) when V_{CC} falls below approximately +3.1V. The reduced levels also reduce supply-current requirements, extending battery life. Built-in hysteresis of approximately 400mV for V_{CC} ensures that the RS-

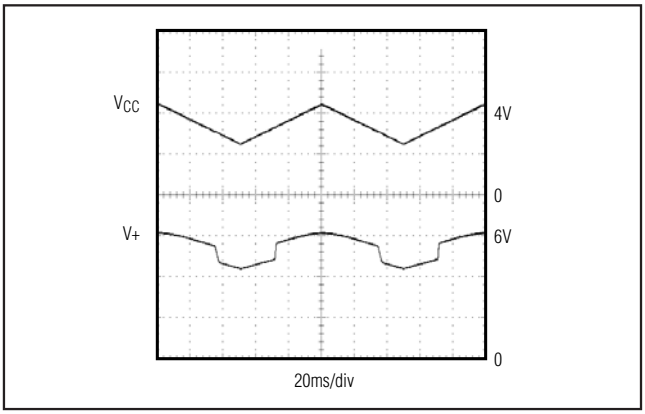

Figure 1. V+ Switchover for Changing V_{CC}

Dual Mode is a trademark of Maxim Integrated Products, Inc.

Table 1. Operating Supply Options

SYSTEM SUPPLY (V)	V_{CC} (V)	V_L (V)	RS-232 MODE
1 Li+ Cell	+2.4 to +4.2	Regulated system voltage	Compliant/Compatible
3 NiCad/NiMh Cells	+2.4 to +3.8	Regulated system voltage	Compliant/Compatible
Regulated Voltage Only (V_{CC} falling)	+3.0 to +5.5	+3.0 to +5.5	Compliant
Regulated Voltage Only (V_{CC} falling)	+2.5 to +3.0	+2.5 to +3.0	Compatible

Table 2. Output Control Truth Table

TRANSCEIVER STATUS	FORCEON	$\overline{\text{FORCEOFF}}$	RECEIVER STATUS	$\overline{\text{INVALID}}$
Shutdown (AutoShutdown)	Low	High	High impedance	Low
Shutdown (Forced Off)	X	Low	High impedance	†
Normal Operation (Forced On)	High	High	Active	†
Normal Operation (AutoShutdown)	Low	High	Active	High

X = Don't care.

† = $\overline{\text{INVALID}}$ output state is determined by R_IN input levels.

232 output levels do not change if V_{CC} is noisy or has a sudden current draw causing the supply voltage to drop slightly. The outputs return to RS-232-compliant levels (±5.5V) when V_{CC} rises above approximately +3.5V.

The MAX3230E/AE and MAX3231E/AE transmitters guarantee a 250kbps data rate with worst-case loads of 3kΩ in parallel with 1000pF.

When $\overline{\text{FORCEOFF}}$ is driven to ground, the transmitters and receivers are disabled and the outputs become high impedance. When the AutoShutdown circuitry senses that all receiver and transmitter inputs are inactive for more than 30µs, the transmitters are disabled and the outputs go to a high-impedance state. When the power is off, the MAX3230E/AE and MAX3231E/AE permit the transmitter outputs to be driven up to ±12V.

The transmitter inputs do not have pullup resistors. Connect unused inputs to GND or V_L.

RS-232 Receivers

The MAX3230E/AE and MAX3231E/AE receivers convert RS-232 signals to logic-output levels. All receivers have inverting tri-state outputs and can be active or inactive. In shutdown ($\overline{\text{FORCEOFF}}$ = low) or in AutoShutdown, the MAX3230E/AE and MAX3231E/AE receivers are in a high-impedance state (Table 2).

The MAX3230E/AE and MAX3231E/AE feature an $\overline{\text{INVALID}}$ output that is enabled low when no valid RS-232 signal levels have been detected on any receiver inputs. $\overline{\text{INVALID}}$ is functional in any mode (Figures 2 and 3).

AutoShutdown

The MAX3230E/AE and MAX3231E/AE achieve a 1µA supply current with Maxim's AutoShutdown feature, which operates when FORCEON is low and $\overline{\text{FORCEOFF}}$ is high. When these devices sense no valid signal levels on all receiver inputs for 30µs, the on-board charge pump and drivers are shut off, reducing V_{CC} supply current to 1µA. This occurs if the RS-232 cable is disconnected or the connected peripheral transmitters are turned off. The device turns on again when a valid level is applied to any RS-232 receiver input. As a result, the system saves power without changes to the existing BIOS or operating system.

Table 2 and Figure 2c summarize the MAX3230E/AE and MAX3231E/AE operating modes. FORCEON and $\overline{\text{FORCEOFF}}$ override AutoShutdown. When neither control is asserted, the IC selects between these states automatically, based on receiver input levels. Figures 2a, 2b, and 3a depict valid and invalid RS-232-receiver levels. Figures 3a and 3b show the input levels and timing diagram for AutoShutdown operation.

A system with AutoShutdown can require time to wake up. Figure 4 shows a circuit that forces the transmitters on for 100ms, allowing enough time for the other system to realize that the MAX3230E/AE and

±15kV ESD-Protected +2.5V to +5.5V RS-232 Transceivers in UCSP and WLP

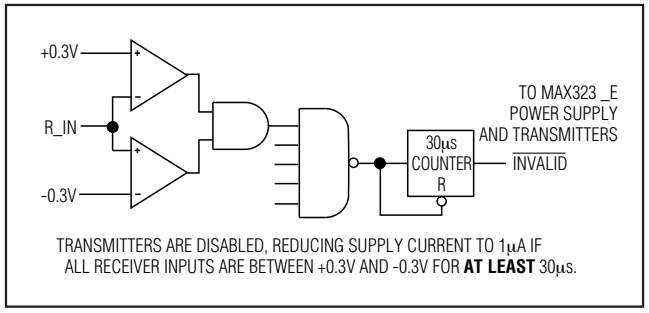

Figure 2a. MAX323_E Entering 1µA Supply Mode with AutoShutdown

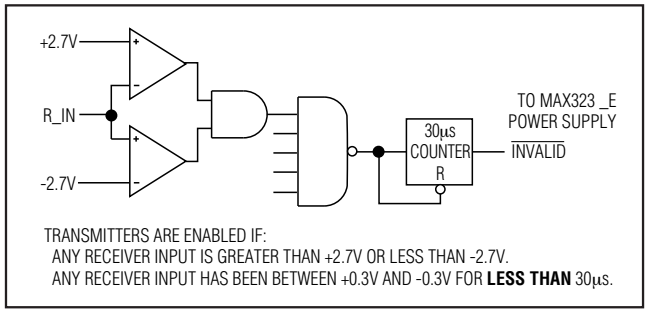

Figure 2b. MAX323_E with Transmitters Enabled Using AutoShutdown

MAX3231E/AE are active. If the other system transmits valid RS-232 signals within that time, the RS-232 ports on both systems remain enabled.

When shut down, the device's charge pumps are off, V+ is pulled to V_{CC}, V- is pulled to ground, and the transmitter outputs are high impedance. The time required to exit shutdown is typically 100µs (Figure 3b).

V_L Logic Supply Input

Unlike other RS-232 interface devices, where the receiver outputs swing between 0 and V_{CC}, the MAX3230E/AE and MAX3231E/AE feature a separate logic supply input (V_L) that sets V_{OH} for the receiver outputs. The transmitter inputs (T_IN), FORCEON, and $\overline{FORCEOFF}$, are also referred to V_L. This feature allows maximum flexibility in interfacing to different systems and logic levels. Connect V_L to the system's logic supply voltage (+1.65V to +5.5V), and bypass it with a 0.1µF capacitor to GND. If the logic supply is the same as V_{CC}, connect V_L to V_{CC}. Always enable V_{CC} before enabling the V_L supply. V_{CC} must be greater than or equal to the V_L supply.

Software-Controlled Shutdown

If direct software control is desired, connect $\overline{FORCEOFF}$ and FORCEON together to disable AutoShutdown. The microcontroller (µC) then drives $\overline{FORCEOFF}$ and FORCEON like a $\overline{SHDN}$ input. $\overline{INVALID}$ can be used to alert the µC to indicate serial data activity.

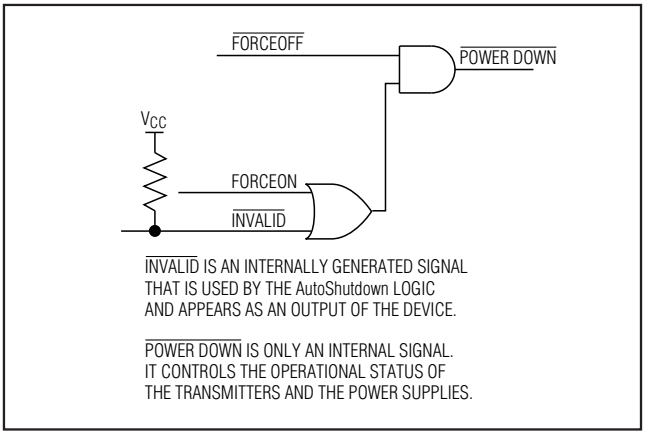

Figure 2c. MAX323_E AutoShutdown Logic

±15kV ESD Protection

As with all Maxim devices, ESD-protection structures are incorporated on all pins to protect against electrostatic discharges encountered during handling and assembly. The driver outputs and receiver inputs of the MAX3230E/AE and MAX3231E/AE have extra protection against static electricity. Maxim's engineers have developed state-of-the-art structures to protect these pins against ESD of ±15kV without damage. The ESD structures withstand high ESD in all states: normal operation, shutdown, and power-down. After an ESD event, Maxim's E-versions keep working without latchup, whereas competing RS-232 products can latch and must be powered down to remove latchup.

ESD protection can be tested in various ways; the transmitter outputs and receiver inputs of this product family are characterized for protection to the following limits:

1) ±15kV using the Human Body Model

2) ±8kV using the Contact Discharge method specified in IEC 1000-4-2

3) ±15kV using the IEC 1000-4-2 Air-Gap method

ESD Test Conditions

ESD performance depends on a variety of conditions. Contact Maxim for a reliability report that documents test setup, test methodology, and test results.

Human Body Model

Figure 5a shows the Human Body Model. Figure 5b shows the current waveform it generates when discharged into a low impedance. This model consists of a 100pF capacitor charged to the ESD voltage of interest,

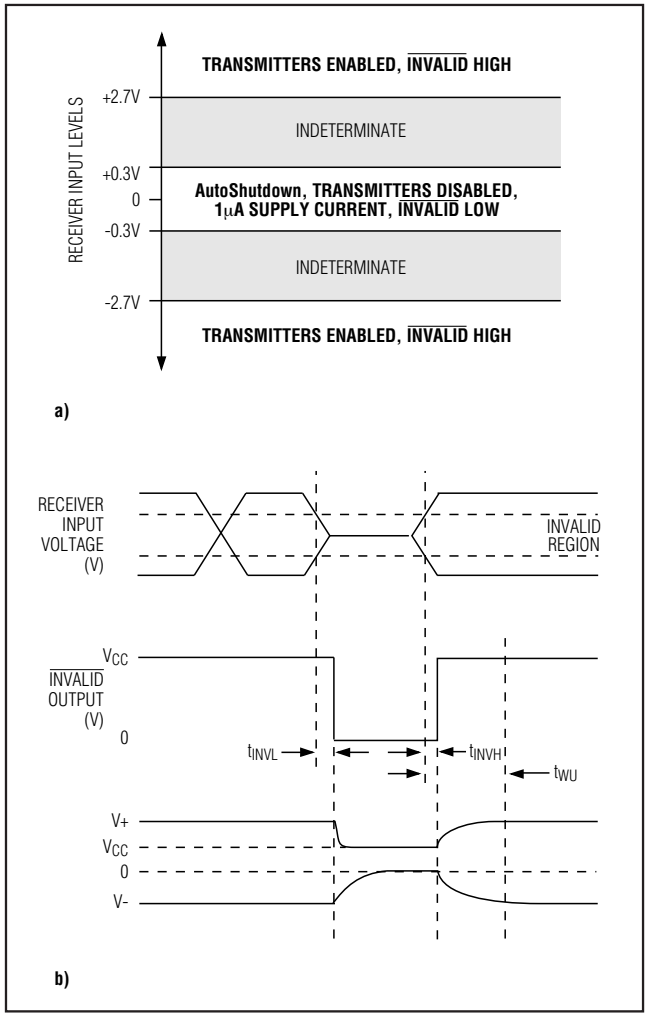

Figure 3. AutoShutdown Trip Levels

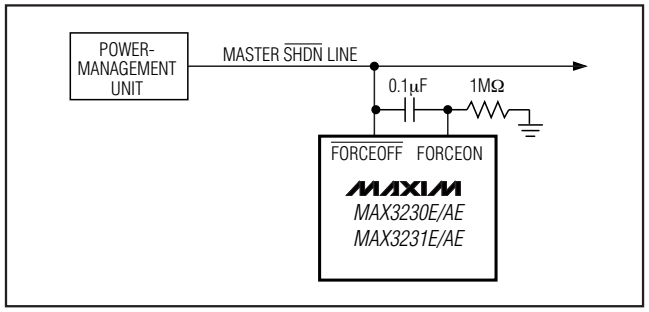

Figure 4. AutoShutdown with Initial Turn-On to Wake Up a Mouse or Another System

which is then discharged into the test device through a 1.5kΩ resistor.

IEC 1000-4-2

The IEC 1000-4-2 standard covers ESD testing and performance of finished equipment. It does not specifically refer to ICs. The MAX3230E/AE and MAX3231E/AE aid in designing equipment that meets Level 4 (the highest level) of IEC 1000-4-2, without the need for additional ESD-protection components.

The major difference between tests done using the Human Body Model and IEC 1000-4-2 is a higher peak current in IEC 1000-4-2, because series resistance is lower in the IEC 1000-4-2 model. Hence, the ESD withstands voltage measured to IEC 1000-4-2 and is generally lower than that measured using the Human Body Model. Figure 6a shows the IEC 1000-4-2 model, and Figure 6b shows the current waveform for the ±8kV IEC 1000-4-2 Level 4 ESD Contact Discharge test.

The Air-Gap test involves approaching the device with a charged probe. The Contact Discharge method connects the probe to the device before the probe is energized.

Machine Model

The Machine Model for ESD tests all pins using a 200pF storage capacitor and zero discharge resistance. Its objective is to emulate the stress caused by contact that occurs with handling and assembly during manufacturing. Of course, all pins require this protection during manufacturing, not just RS-232 inputs and outputs. Therefore, after PC board assembly, the Machine Model is less relevant to I/O ports.

Applications Information

Capacitor Selection

The capacitor type used for C1–C4 is not critical for proper operation; either polarized or nonpolarized capacitors can be used. However, ceramic chip capacitors with an X7R or X5R dielectric work best. The charge pump requires 0.1µF capacitors for 3.3V operation. For other supply voltages, see Table 3 for required capacitor values. Do not use values smaller than those listed in Table 3. Increasing the capacitor values (e.g., by a factor of 2) reduces ripple on the transmitter outputs and slightly reduces power consumption. C2, C3, and C4 can be increased without changing the vaue of C1.

Caution: Do not increase C1 without also increasing the values of C2, C3, and C4 to maintain the proper ratios (C1 to the other capacitors).

When using the minimum required capacitor values, make sure the capacitor value does not degrade excessively with temperature. If in doubt, use capacitors with

±15kV ESD-Protected +2.5V to +5.5V RS-232 Transceivers in UCSP and WLP

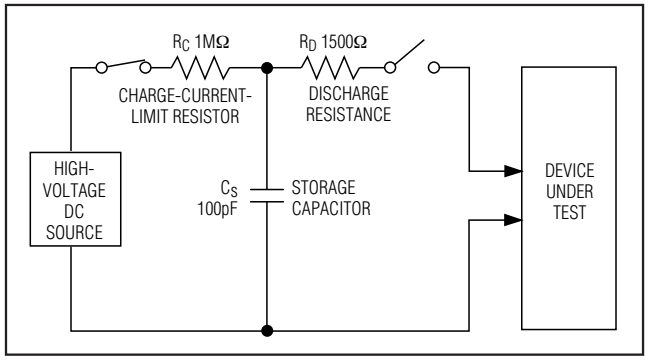

Figure 5a. Human Body ESD Test Models

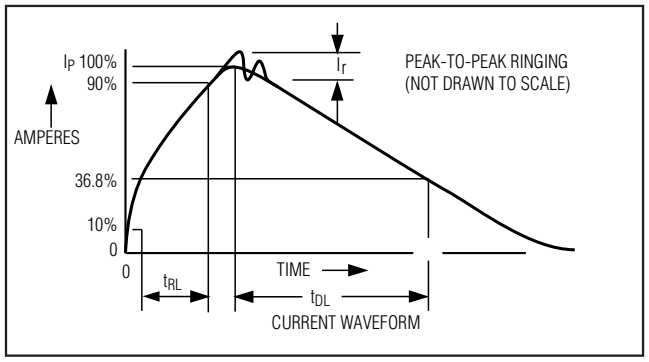

Figure 5b. Human Body Model Current Waveform

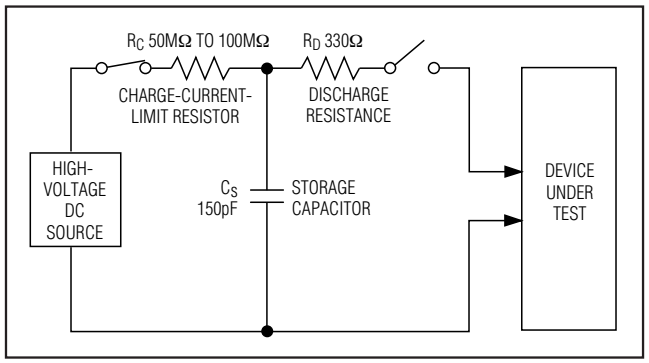

Figure 6a. IEC 1000-4-2 ESD Test Model

a larger nominal value. The capacitor's equivalent series resistance (ESR) usually rises at low temperatures and influences the amount of ripple on V+ and V-.

Power-Supply Decoupling

In most circumstances, a 0.1µF V_{CC} bypass capacitor is adequate. In applications that are sensitive to power-supply noise, use a capacitor of the same value as the charge-pump capacitor C1. Connect bypass capacitors as close to the IC as possible.

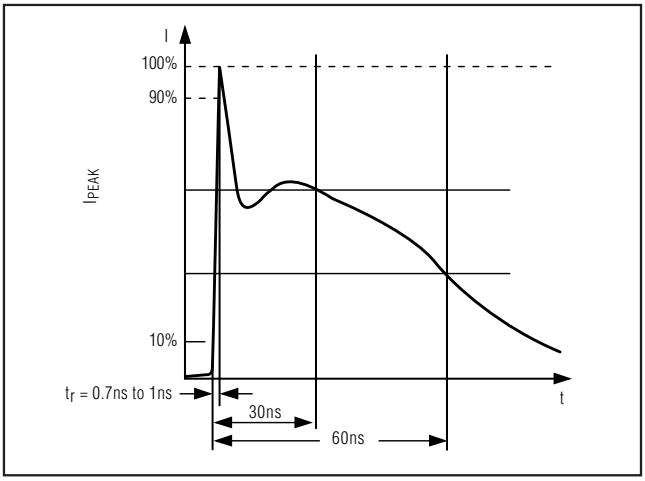

Figure 6b. IEC 1000-4-2 ESD Generator Current Waveform

Table 3. Required Capacitor Values

V_{CC} (V)	C1, C_{BYPASS} (µF)	C2, C3, C4 (µF)
2.5 to 3.0	0.22	0.22
3.0 to 3.6	0.1	0.1
4.5 to 5.5	0.047	0.33
3.0 to 5.5	0.22	1

Transmitter Outputs when Exiting Shutdown

Figure 7 shows a transmitter output when exiting shutdown mode. The transmitter is loaded with 3kΩ in parallel with 1000pF. The transmitter output displays no ringing or undesirable transients as it comes out of shutdown, and is enabled only when the magnitude of V- exceeds approximately -3V.

High Data Rates

The MAX3230E/AE and MAX3231E/AE maintain the RS-232 ±5.0V minimum transmitter output voltage even at high data rates. Figure 8 shows a transmitter loopback test circuit. Figure 9 shows a loopback test result at 120kbps, and Figure 10 shows the same test at 250kbps. For Figure 9, the transmitter was driven at 120kbps into an RS-232 load in parallel with 1000pF. For Figure 10, a single transmitter was driven at 250kbps and loaded with an RS-232 receiver in parallel with 1000pF.

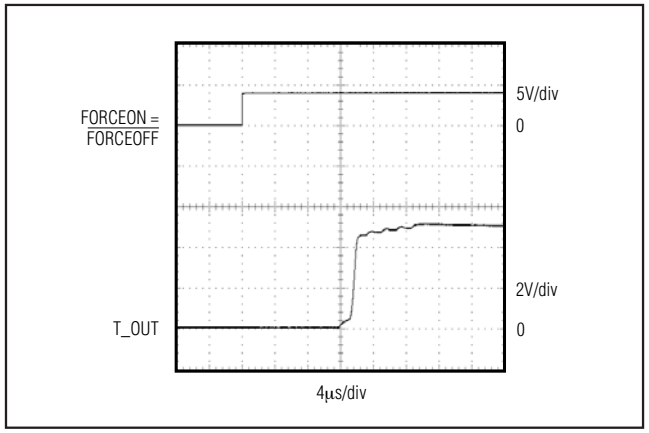

Figure 7. Transmitter Outputs Exiting Shutdown or Powering Up

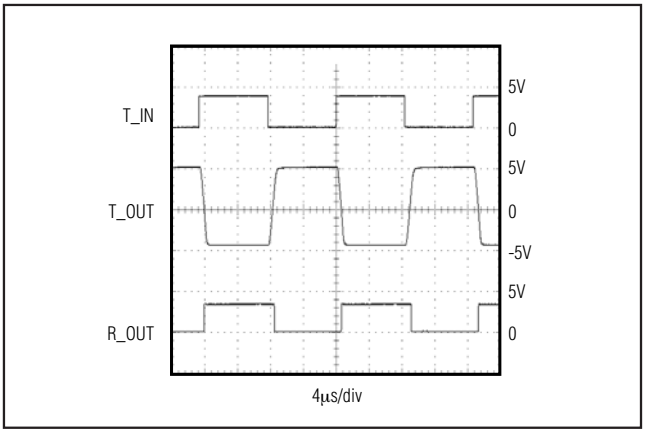

Figure 9. Loopback Test Result at 120kbps

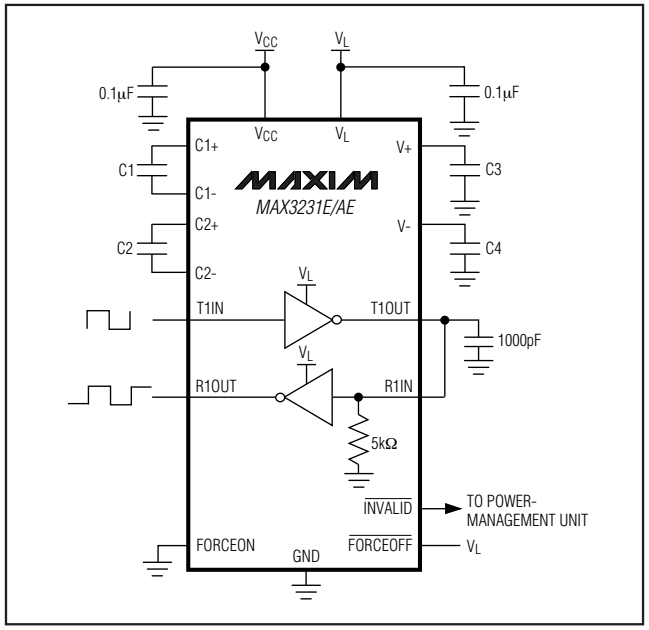

Figure 8. Transmitter Loopback Test Circuit

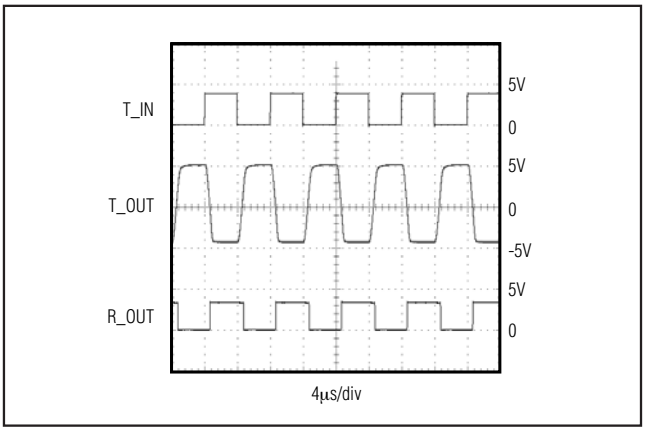

Figure 10. Loopback Test Result at 250kbps

UCSP Applications Information

For the latest application details on UCSP construction, dimensions, tape carrier information, PC board techniques, bump-pad layout, and recommended reflow temperature profile, as well as the latest information on reliability testing results, refer to the Application Note *UCSP—A Wafer-Level Chip-Scale Package* available on Maxim's website at **www.maxim-ic.com/ucsp**.

Chip Information

TRANSISTOR COUNT: 698

PROCESS: CMOS

±15kV ESD-Protected +2.5V to +5.5V RS-232 Transceivers in UCSP and WLP

Typical Operating Circuits (continued)

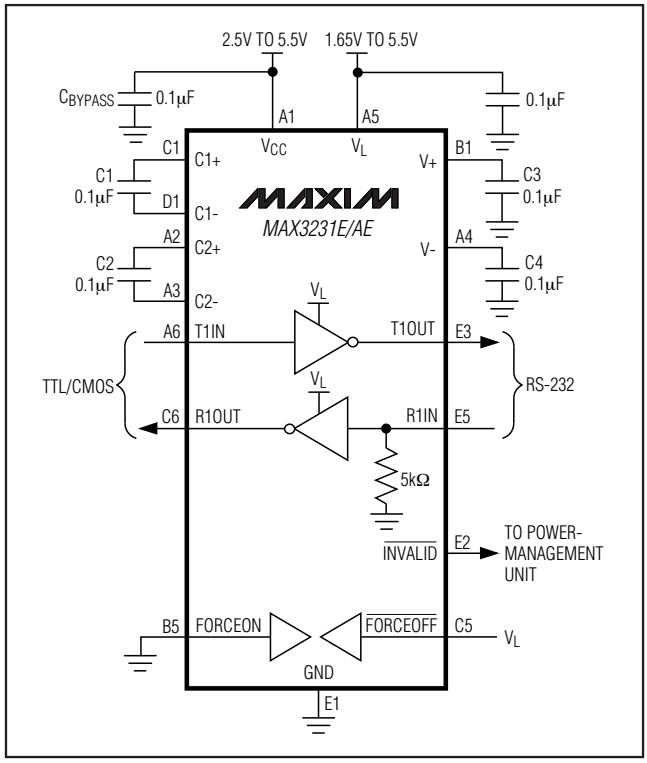

Pin Configurations

TOP VIEW

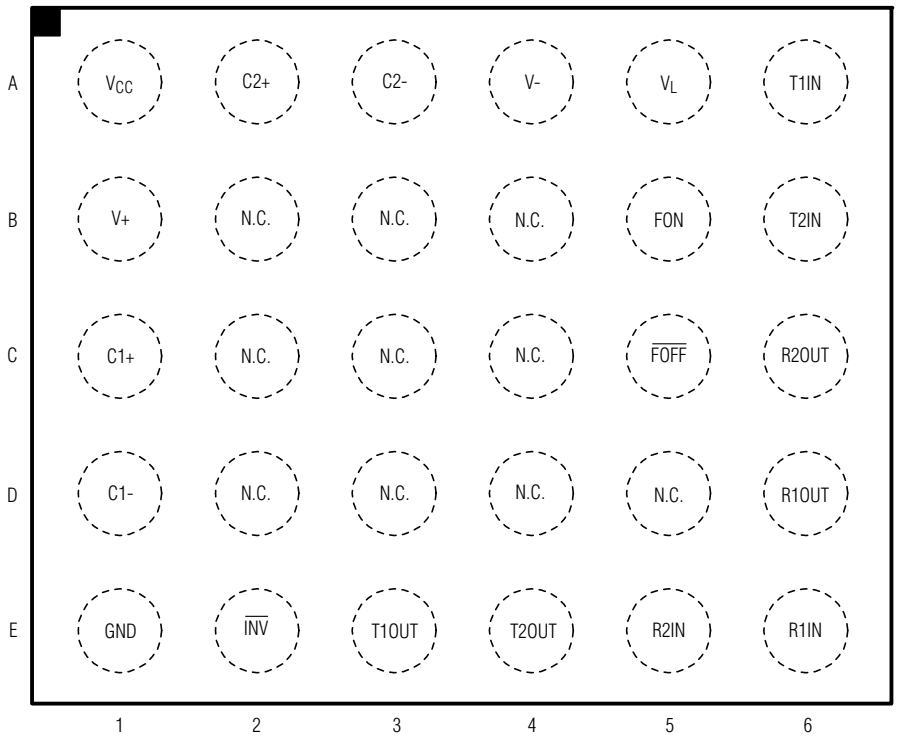

±15kV ESD-Protected +2.5V to +5.5V RS-232 Transceivers in UCSP and WLP

Pin Configurations (continued)

TOP VIEW

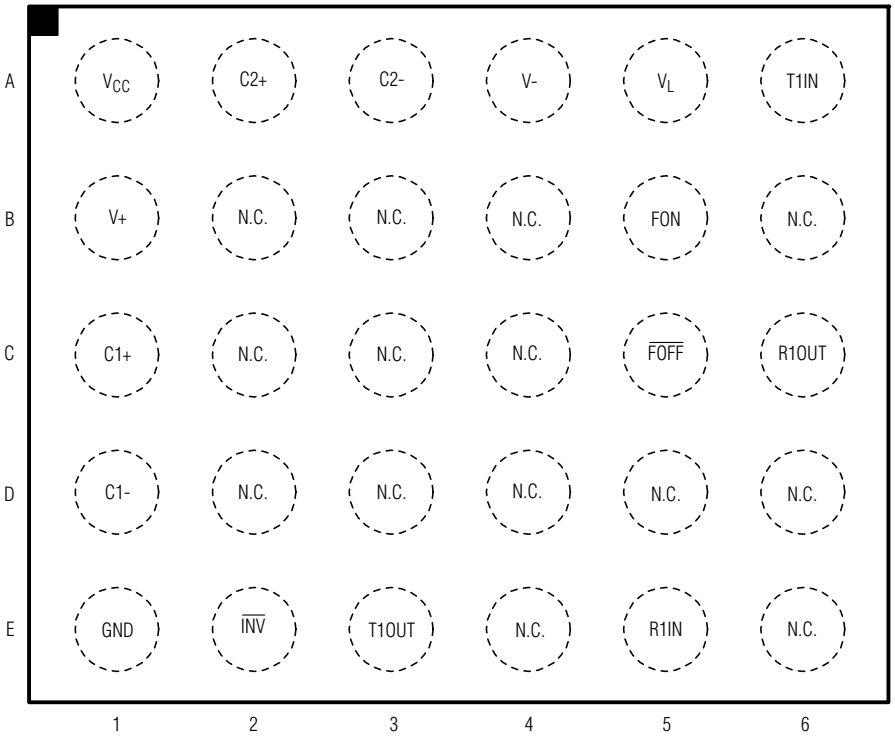

MAXIM

MAX3231E/AE

FON = FORCEON
$\overline{FOFF}$ = $\overline{FORCEOFF}$
$\overline{INV}$ = $\overline{INVALID}$

Package Information

For the latest package outline information and land patterns, go to **www.maxim-ic.com/packages**.

PACKAGE TYPE	PACKAGE CODE	DOCUMENT NO.
6 x 5 UCSP	B30-2	**21-0123**
6 x 5 WLP	W302A3-2	**21-0016**

Revision History

REVISION NUMBER	REVISION DATE	DESCRIPTION	PAGES CHANGED
0	5/04	Initial release	—
1	10/08	Addition of lead-free and WLP packaging	1, 5, 6, 7, 15

Maxim cannot assume responsibility for use of any circuitry other than circuitry entirely embodied in a Maxim product. No circuit patent licenses are implied. Maxim reserves the right to change the circuitry and specifications without notice at any time.

© 2008 Maxim Integrated Products MAXIM is a registered trademark of Maxim Integrated Products, Inc.