Click here for production status of specific part numbers.

MAX3218

1µA Supply Current, 1.8V to 4.25V-Powered RS-232 Transceiver with AutoShutdown

General Description

The MAX3218 RS-232 transceiver is intended for battery-powered EIA/TIA-232E and V.28/V.24 communications interfaces that need two drivers and two receivers with minimum power consumption from a single low-voltage supply. It provides a wide +1.8V to +4.25V operating voltage range while maintaining true RS-232 and EIA/TIA-562 voltage levels. The MAX3218 runs from two alkaline, NiCd, or NiMH cells without any form of voltage regulator. A guaranteed 120kbps data rate provides compatibility with popular software for communicating with personal computers.

Supply current is reduced to 1µA with Maxim's new AutoShutdown™ feature. When the MAX3218 does not sense a valid signal level on the receiver inputs, the on-board power-supply and drivers shut down. This occurs if the RS-232 cable is disconnected or if the transmitters of the connected peripheral are turned off. The system turns on again when a valid level is applied to either RS-232 receiver input. As a result, the system saves power without changes to the existing software. Additionally, the MAX3218 can be forced into or out of shutdown, under logic control.

While shut down, all receivers can remain active or can be disabled under logic control, permitting a system incorporating the CMOS MAX3218 to monitor external devices while in low-power shutdown. Three-state drivers are provided on both receiver outputs so that multiple receivers, generally of different interface standards, can be on the same bus. The MAX3218 is available in 20-pin DIP and SSOP packages.

Applications

Battery-Powered Equipment

Subnotebook Computers

PDAs

Hand-Held Equipment

Peripherals

Cellular Phones

AutoShutdown is a trademark of Maxim Integrated Products.

Features

BETTER THAN BIPOLAR!

- **1µA Supply Current Using AutoShutdown**
- **Operates Directly from Two Alkaline, NiCd or NiMH Cells**
- **+1.8V to +4.25V Single-Supply Voltage Range**
- **120kbps Data Rate Guaranteed**
- **Low-Cost Surface-Mount Components**
- **Meets EIA/TIA-232E Specifications**
- **Three-State Receiver Outputs**
- **Flow-Through Pinout**
- **On-Board DC-DC Converters**
- **20-Pin SSOP and DIP Packages**

Ordering Information

PART	TEMP RANGE	PIN-PACKAGE
MAX3218CPP+	0ºC to +70ºC	20 Plastic DIP
MAX3218CAP+	0ºC to +70ºC	20 SSOP
MAX3218EAP+	-40ºC to +85ºC	20 SSOP

+Denotes a lead(Pb)-free/RoHS-compliant package.

Pin Configuration

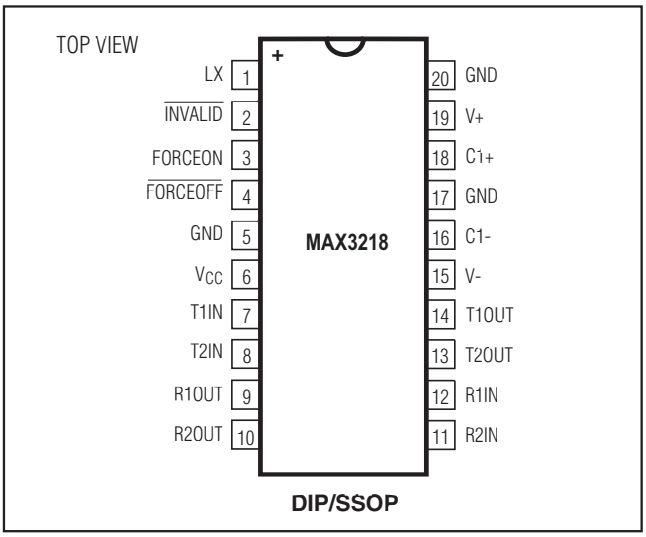

maxim integrated™

Absolute Maximum Ratings

Supply Voltages
- V_{CC} ..... -0.3V to +4.6V
- V+ ..... (V_{CC} - 0.3V) to +7.5V
- V- ..... +0.3V to -7.4V
- V_{CC} to V- ..... +12V
- LX ..... -0.3V to (1V + V+)

Input Voltages
- T_IN, FORCEON, FORCEOFF ..... -0.3V to +7V
- R_IN ..... ±25V

Output Voltages
- T_OUT ..... ±15V)
- R_OUT ..... -0.3V to (V_{CC} + 0.3V)

Short-Circuit Duration, R_OUT, T_OUT to GND ..... Continuous

Continuous Power Dissipation (T_A = +70°C)
- Plastic DIP (derate 11.11mW/°C above +70°C) 889mW
- SSOP (derate 8.00mW/°C above +70°C) 640mW

Operating Temperature Ranges
- MAX3218C_ P ..... 0°C to +70°C
- MAX3218E_ P ..... -40°C to +85°C

Storage Temperature Range ..... -65°C to +150°C

Lead Temperature (soldering, 10sec) ..... +300°C

Stresses beyond those listed under "Absolute Maximum Ratings" may cause permanent damage to the device. These are stress ratings only, and functional operation of the device at these or any other conditions beyond those indicated in the operational sections of the specifications is not implied. Exposure to absolute maximum rating conditions for extended periods may affect device reliability.

Electrical Characteristics

(Circuit of Figure 1, V_{CC} = 1.8V to 4.25V, C1 = 0.47µF, C2 = C3 = C4 = 1µF, L1 = 15µH, T_A = T_{MIN} to T_{MAX}, unless otherwise noted. Typical values are at V_{CC} = 3.0V, T_A = +25°C.)

PARAMETER	CONDITIONS		MIN	TYP	MAX	UNITS
DC CHARACTERISTICS						
Operating Voltage Range			1.8		4.25	V
Supply Current, AutoShutdown™	V_{CC} = 3.0V, T_A = +25°C, all R_IN open, FORCEON = GND, FORCEOFF = V_{CC}			1.0	10	µA
Supply Current, Shutdown	FORCEOFF = GND, T_A = +25°C, V_{CC} = 3.0V			1.0	10	µA
Supply Current, AutoShutdown™ Disabled	FORCEON = FORCEOFF = V_{CC} = 3.0V, no load			2.0	3.0	mA
LOGIC INPUTS AND RECEIVER OUTPUTS						
Input Logic Threshold Low	T_IN, FORCEON, FORCEOFF				0.33 x V_{CC}	V
Input Logic Threshold High	T_IN, FORCEON, FORCEOFF		0.67 x V_{CC}			V
Input Leakage Current	T_IN, FORCEON = FORCEOFF = 0V or V_{CC}			0.001	±1	µA
Output Voltage Low	R_OUT, I_{OUT} = 1.0mA				0.4	V
Output Voltage High	R_OUT, I_{OUT} = -0.4mA		V_{CC} - 0.25	V_{CC} - 0.08		V
Output Leakage Current	R_OUT, 0V ≤ R_OUT ≤ V_{CC}, FORCEON = FORCEOFF = 0V			0.05	±10	µA
AUTOSHUTDOWN (FORCEON = GND, FORCEOFF = V_{CC})						
Receiver Input Thresholds, Transmitters Enabled	Figure 4a	Positive threshold			2.8	V
		Negative threshold	-2.8			
Receiver Input Thresholds Transmitters Disabled	1µA supply current, Figure 4a		-0.3		0.3	V
INVALID Output Low Voltage	I_{OUT} = 1.0mA, -0.3V < R_IN < 0.3V				0.4	V
INVALID Output High Voltage	I_{OUT} = -0.4mA, |R_IN| > 2.8V		V_{CC} - 0.25			V

Electrical Characteristics (continued)

(Circuit of Figure 1, V_{CC} = 1.8V to 4.25V, C1 = 0.47µF, C2 = C3 = C4 = 1µF, L1 = 15µH, T_A = T_{MIN} to T_{MAX}, unless otherwise noted. Typical values are at V_{CC} = 3.0V, T_A = +25°C.)

PARAMETER	CONDITIONS	MIN	TYP	MAX	UNITS
EIA/TIA-232E RECEIVER INPUTS					
Input Voltage Range		-25		+25	V
Input Threshold Low	V_{CC} = 2.0V to 4.25V	0.4			V
	V_{CC} = 1.8V to 4.25V	0.3			
Input Threshold High	V_{CC} = 1.8V to 4.25V			3.0	V
	V_{CC} = 1.8V to 3.6V			2.8	
Input Hysteresis			0.7		V
Input Resistance	-15V < R_IN < 15V	3	5	7	kΩ
EIA/TIA-232E TRANSMITTER OUTPUTS					
Output Voltage Swing	All transmitter outputs loaded with 3kΩ to ground	±5	±6		V
Output Resistance	V_{CC} = 0V, -2V < T_OUT < 2V	300			Ω
Output Short-Circuit Current			±24	±100	mA

Timing Characteristics

(Circuit of Figure 1, V_{CC} = 1.8V to 4.25V, C1 = 0.47µF, C2 = C3 = C4 = 1µF, L1 = 15µH, T_A = T_{MIN} to T_{MAX}, unless otherwise noted. Typical values are at V_{CC} = 3.0V, T_A = +25°C.)

PARAMETER	SYMBOL	CONDITIONS	MIN	TYP	MAX	UNITS
Data Rate		2500pF ‖ 3kΩ load each transmitter, one transmitter switching, 150pF load each receiver	120	235		kbps
Receiver Output Enable Time	t_{ER}			90	300	ns
Receiver Output Disable Time	t_{DR}			200	500	ns
Transmitter Output Enable Time	t_{ET}			250	450	µs
Transmitter Output Disable Time	t_{DT}			500		ns
Receiver Propagation Delay	t_{PHLR}	150pF load		290	1000	ns
	t_{PLHR}	150pF load		260	1000	
Transmitter Propagation Delay	t_{PHLT}	2500pF ‖ 3kΩ load		1.9	2.7	µs
	t_{PLHT}	2500pF ‖ 3kΩ load		1.8	2.7	
Transition Region Slew Rate		T_A = +25°C, V_{CC} = 3.0V, R_L = 3kΩ to 7kΩ, C_L = 50pF to 2500pF, measured from +3V to -3V or -3V to +3V	3.0		30	V/µs
AUTOSHUTDOWN TIMING						
Receiver Threshold to Transmitters Enabled	t_{WU}	Figure 4b		250		µs
Receiver Positive or Negative Threshold to INVALID High	t_{INVH}	Figure 4b		1		µs
Receiver Positive or Negative Threshold to INVALID Low	t_{INVL}	Figure 4b		30		µs

Typical Operating Characteristics

(Circuit of Figure 1, V_{CC} = 1.8V, all transmitter outputs loaded with 3kΩ, T_A = +25°C, unless otherwise noted.)

SUPPLY CURRENT vs. SUPPLY VOLTAGE

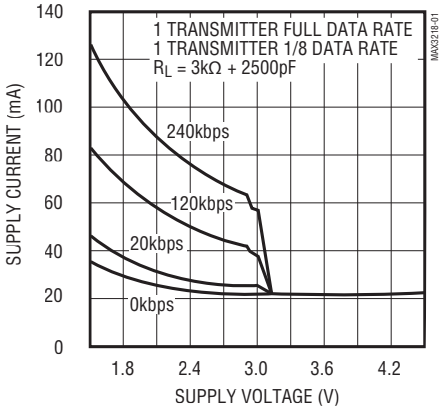

TRANSMITTING SUPPLY CURRENT vs. LOAD CAPACITANCE

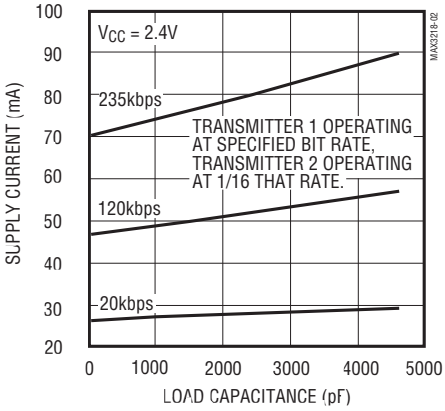

TIME TO EXIT SHUTDOWN (ONE TRANSMITTER HIGH, ONE TRANSMITTER LOW)

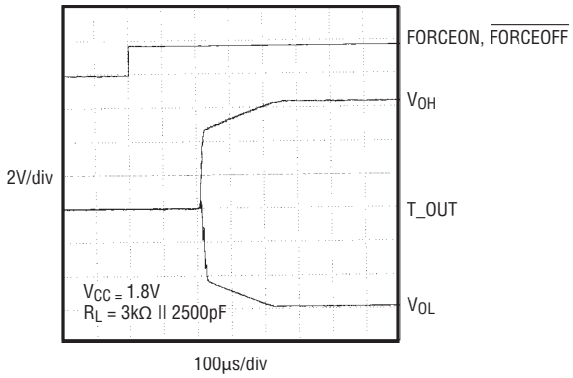

TRANSMITTER OUTPUT VOLTAGE vs. LOAD CAPACITANCE AT 120kbps

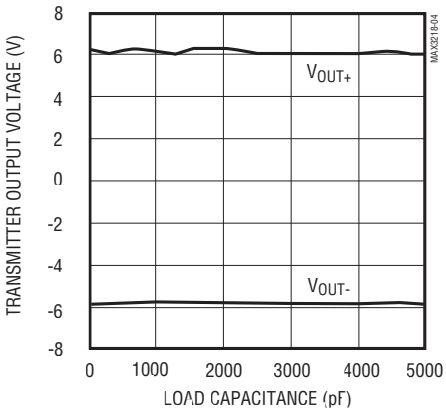

SLEW RATE vs. TRANSMITTER CAPACITANCE

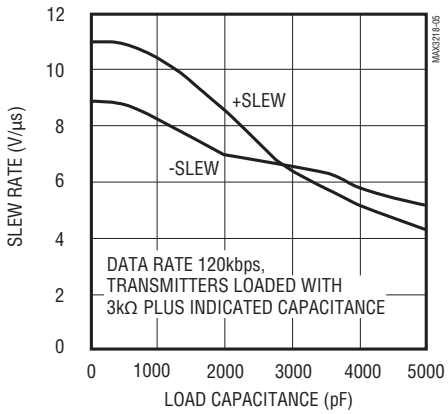

Pin Description

PIN	NAME	FUNCTION
1	LX	Inductor/Diode Connection Point
2	INVALID	Output of Invalid Signal Detector. Low if invalid RS-232 levels are present on all receiver inputs, otherwise high.
3	FORCEON	Drive high when FORCEOFF = high to override automatic circuitry, keeping transmitters on.
4	FORCEOFF	Drive low to shut down transmitters and on-board power supply, overriding all automatic circuitry and FORCEON.
5, 17, 20	GND	Ground
6	V_{CC}	Supply Voltage Input, 1.8V to 4.25V. Bypass to GND with at least 1µF.
7, 8	T1IN, T2IN	Transmitter Inputs
9, 10	R1OUT, R2OUT	Receiver Outputs
11, 12	R2IN, R1IN	Receiver Inputs
13, 14	T2OUT, T1OUT	Transmitter Outputs, swing between V+ and V-
15	V-	Negative Supply generated on-board
16, 18	C1-, C1+	Terminal for Charge-Pump Capacitor
19	V+	Positive Supply generated on-board

Detailed Description

The MAX3218 line driver/receiver is intended for battery-powered EIA/TIA-232 and V.28/V.24 communications interfaces that require two drivers and two receivers. The operating voltage extends from 1.8V to 4.25V, yet the device maintains true RS-232 and EIA/TIA-562 transmitter output voltage levels. This wide supply voltage range permits direct operation from a variety of batteries without the need for a voltage regulator. For example, the MAX3218 can be run directly from a single lithium cell or a pair of alkaline cells. It can also be run directly from two NiCd or NiMH cells from full-charge voltage down to the normal 0.9V/cell end-of-life point. The 4.25V maximum supply voltage allows the two rechargeable cells to be trickle- or fast-charged while driving the MAX3218.

The circuit comprises three sections: power supply, transmitters, and receivers. The power-supply section converts the supplied input voltage to 6.5V, providing the voltages necessary for the drivers to meet true RS-232 levels. External components are small and inexpensive.

The transmitters and receivers are guaranteed to operate at 120kbps data rates, providing compatibility with LapLink™ and other high-speed communications software.

The MAX3218 is equipped with Maxim's new proprietary AutoShutdown circuitry. This achieves a 1µA supply current by shutting down the device when the RS-232 cable is disconnected or when the connected peripheral transmitters are turned off. While shut down, both receivers can remain active or can be disabled under logic control. With this feature, the MAX3218 can be in low-power shutdown mode and still monitor activity on external devices. Three-state drivers are provided on both receiver outputs.

Three-state drivers on both receiver outputs are provided so that multiple receivers, generally of different interface standards, can be wire-ORed at the UART.

Switch-Mode Power Supply

The switch-mode power supply uses a single inductor with one diode and three small capacitors to generate ±6.5V from an input voltage in the 1.8V to 4.25V range.

Inductor Selection

Use a 15µH inductor with a saturation current rating of at least 350mA and less than 1Ω resistance. Table 1 lists suppliers of inductors that meet the 15µH/350mA/1Ω specifications.

™ LapLink is a trademark of Traveling Software, Inc.

Table 1. Suggested Component Suppliers

MANUFACTURER	PART NUMBER	PHONE	FAX
Inductors			
Murata-Erie	LQH4N150K-TA	USA (814) 237-1431	USA (814) 238-0490
Sumida	CD43150	USA (708) 956-0666 Japan (03) 3607-5111	USA (708) 956-0702 Japan (03) 3607-5428
TDK	NLC453232T-150K	USA (708) 803-6100 Japan (03) 3278-5111	USA (708) 803-6296 Japan (03) 3278-5358
Diodes—Surface-Mount			
Allegro	TMPD6050LT	USA (508) 853-5000	USA (508) 853-7556
Central Semiconductor	CMPSH-3 (Schottky)	USA (516) 435-1110	USA (516) 435-1824
Motorola	MMBD6050LT1 (silicon)	USA (408) 749-0510	USA (408) 991-7420
Philips	PMBD6050 (silicon)	USA (401) 762-3800	USA (401) 767-4493
Diodes—Through-Hole			
Motorola	1N6050 (silicon), 1N5817 (Schottky)	USA (408) 749-0510	USA (408) 991-7420

Diode Selection

Key diode specifications are fast recovery time (<10ns), average current rating (>100mA), and peak current rating (>350mA). Inexpensive fast silicon diodes, such as the 1N6050, are generally recommended. More expensive Schottky diodes improve efficiency and give slightly better performance at very low V_{CC} voltages. Table 1 lists suppliers of both surface-mount and through-hole diodes. 1N914s are usually satisfactory, but specifications and performance vary widely with different manufacturers.

Capacitor Selection

Use capacitors with values at least as indicated in Figure 1. Capacitor C2 determines the ripple on V+, but not the absolute voltage. Capacitors C1 and C3 determine both the ripple and the absolute voltage of V-. Bypass V_{CC} to GND with at least 1µF (C4) placed close to pins 5 and 6. If the V_{CC} line is not bypassed elsewhere (e.g., at the power supply), increase C4 to 4.7µF.

You may use ceramic or polarized capacitors in all locations. If you use polarized capacitors, tantalum types are preferred because of the high operating frequency of the power supplies (about 250kHz). If aluminum electrolytics are used, higher capacitance values may be required.

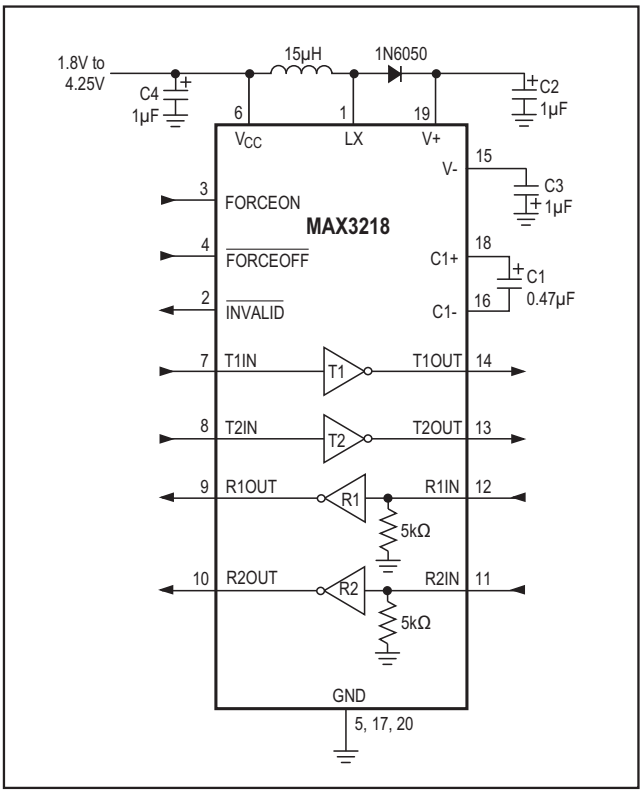

Figure 1. Typical Operating Circuit

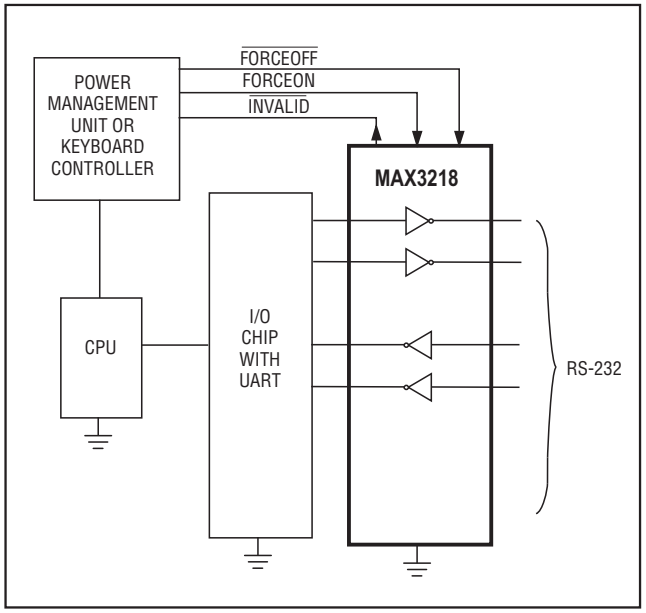

Figure 2. Interface Under Control of PMU

RS-232 Drivers

The two drivers are identical, and deliver EIA/TIA-232E and EIA/TIA-562 output voltage levels when V_{CC} is between 1.8V and 4.25V. One transmitter can drive up to 3kΩ in parallel with 2500pF at up to 120kbps. Connect unused drivers to either GND or V_{CC}. When FORCEOFF is driven low, or when AutoShutdown circuitry senses invalid voltage levels at **all** receiver inputs, the drivers are disabled and their outputs are forced into a high-impedance state. Driver inputs do not have internal pull-up resistors.

RS-232 Receivers

The two receivers are identical, and accept both EIA/TIA-232E and EIA/TIA-562 input signals. The CMOS receiver outputs are inverting and swing rail-to-rail. Receivers are disabled only when FORCEON and FORCEOFF inputs are low. (See Table 2.)

Table 2. Receiver Status

FORCEON	FORCEOFF	RECEIVER STATUS
X	H	Receiver Enabled
H	X	
L	L	Receiver Disabled

Shutdown

When FORCEOFF is low, power supplies are disabled and the transmitters are placed in a high-impedance state. Receiver operation is not affected by taking FORCEOFF low. Power consumption is dramatically reduced in shutdown mode. Supply current is minimized when the receiver inputs are static in any one of three states: floating (ground), GND, or V_{CC}.

AutoShutdown

A 1µA supply current is achieved with Maxim's new AutoShutdown feature, which operates when FORCEON is low and FORCEOFF is high. When the MAX3218 senses no valid signal level on either receiver input for typically 30µs, the on-board power supply and drivers shut down, reducing supply current to 1µA. Internal 5kΩ resistors pull undriven receiver inputs to ground. This occurs if the RS-232 cable is disconnected or if the connected peripheral transmitters are turned off. The system turns on again when a valid level is applied to either RS-232 receiver input. As a result, the system saves power without changes to the existing BIOS or operating system. When using the AutoShutdown feature, INVALID is high when the device is on and low when the device is shut down. The INVALID output indicates the condition of the receiver inputs.

Table 3 summarizes the MAX3218 operating modes. FORCEON and FORCEOFF override the automatic circuitry and force the transceiver into its normal operating state or into its low-power standby state. When neither control is asserted, the IC selects between these states automatically based on receiver input levels. Figure 4 depicts valid and invalid RS-232 receiver levels. The

Table 3. AutoShutdown Logic

RS-232 SIGNAL PRESENT AT RECEIVER INPUT	FORCEOFF INPUT	FORCEON INPUT	INVALID OUTPUT	TRANSCEIVER STATUS
Yes	H	X	H	Normal Operation
No	H	H	L	Normal Operation (Forced On)
No	H	L	L	Shutdown (AutoShutdown)
Yes	L	X	H	Shutdown (Forced Off)
No	L	X	L	Shutdown (Forced Off)

MAX3218 shuts down after sensing invalid RS-232 levels for greater than 30µs, ensuring that the AutoShutdown mode is not enabled for slow-moving signals (>1V/µs).

Another system with AutoShutdown may need a period of time to wake up. Figure 5 shows a circuit that forces the transmitters on for 100ms after start-up, allowing enough time for the other system to realize that the MAX3218 system is awake. If the other system outputs valid RS-232 signals within that time, the RS-232 ports on both systems remain enabled.

Applications Information

Operation from Regulated/Unregulated Dual System Power Supplies

The MAX3218 is intended for use with three different power-supply sources: it can be powered directly from a battery, from a 3.0V or 3.3V power supply, or simultaneously from both. Figure 1 shows the single-supply configuration. Figure 6 shows the circuit for operation from both a 3V supply and a raw battery supply—an ideal configuration where a regulated 3V supply is being derived from two cells. In this application, the MAX3218's logic levels remain appropriate for interface with 3V logic, yet most of the power for the MAX3218 is drawn directly from the battery, without suffering the efficiency losses of the DC-DC converter. This prolongs battery life.

Bypass the input supplies with 0.1µF at V_{CC} (C4) and at least 1µF at the inductor (C5). Increase C5 to 4.7µF if the power supply has no other bypass capacitor connected to it.

Low-Power Operation

The following suggestions will help you get maximum life out of your batteries.

Transmit at the highest practical data rate. Although this raises the supply current while transmission is in progress, the transmission will be over sooner. If the MAX3218 is shut down (using FORCEOFF) as soon as each transmission ends, this practice will save energy.

Operate your whole system from the raw battery voltage rather than suffer the losses of a regulator or DC-DC converter. If this is not possible, but your system is powered from two cells and employs a 3V DC-DC converter to generate the main logic supply, use the circuit of Figure 6. This circuit draws most of the MAX3218's power straight from the battery, but still provides logic-level compatibility with the 3V logic.

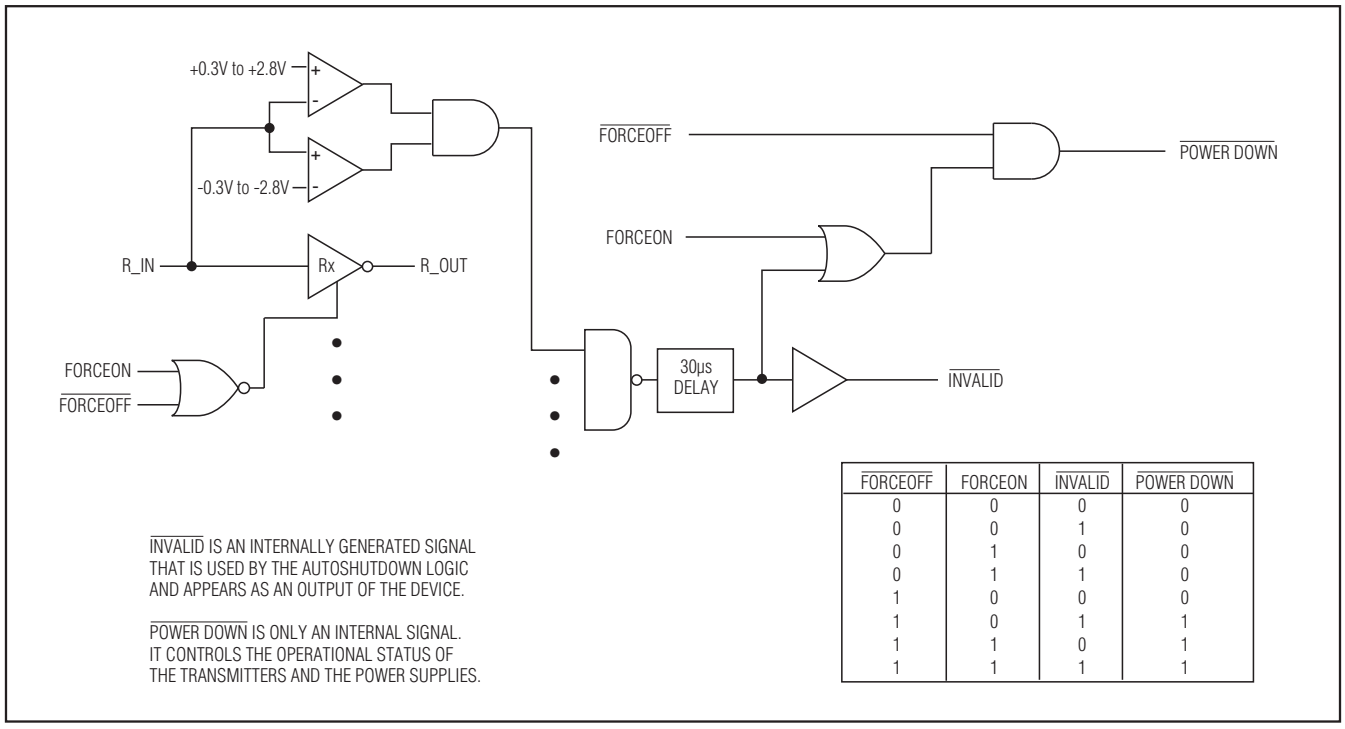

FORCEOFF	FORCEON	INVALID	POWER DOWN
0	0	0	0
0	0	1	0
0	1	0	0
0	1	1	0
1	0	0	0
1	0	1	1
1	1	0	1
1	1	1	1

Figure 3. AutoShutdown Logic

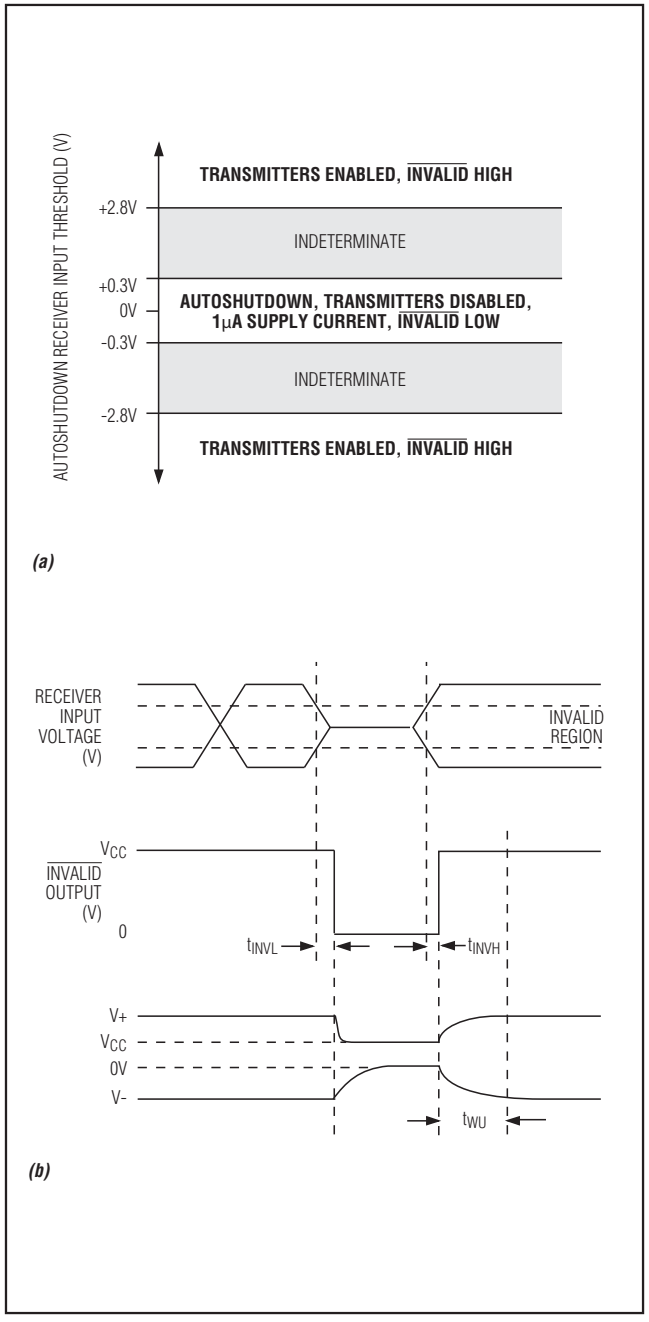

Figure 4. AutoShutdown Trip Levels

Keep communications cables short to minimize capacitive loading. Lowering the capacitive loading on the transmitter outputs reduces the MAX3218's power consumption. Using short, low-capacitance cable also helps transmission at the highest data rates.

EIA/TIA-232E and IA/TIA-562 Standards

RS-232 circuits consume much of their power because the EIA/TIA-232E standard demands that the transmitters deliver at least 5V to receivers with impedances that can be as low as 3kΩ. For applications where power consumption is critical, the EIA/TIA-562 standard provides an alternative.

EIA/TIA-562 transmitter output voltage levels need only reach ±3.7V, and because they have to drive the same 3kΩ receiver loads, the total power consumption is considerably reduced. Since the EIA/TIA-232E and EIA/TIA-562 receiver input voltage thresholds are the same, interoperability between EIA/TIA-232E and EIA/TIA-562 devices is guaranteed. Maxim's MAX560 and MAX561 are EIA/TIA-562 transceivers that operate on a single supply from 3.0V to 3.6V, and the MAX562 transceiver operates from 2.7V to 5.25V while producing EIA/TIA-562 levels.

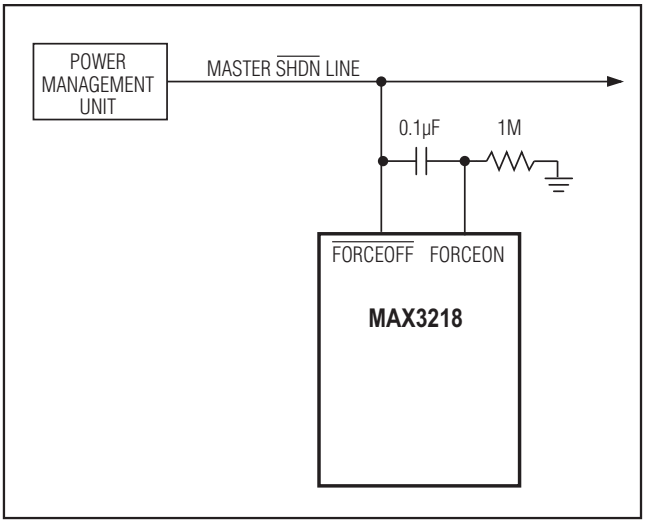

Figure 5. AutoShutdown with Initial Turn-On to Wake Up a System

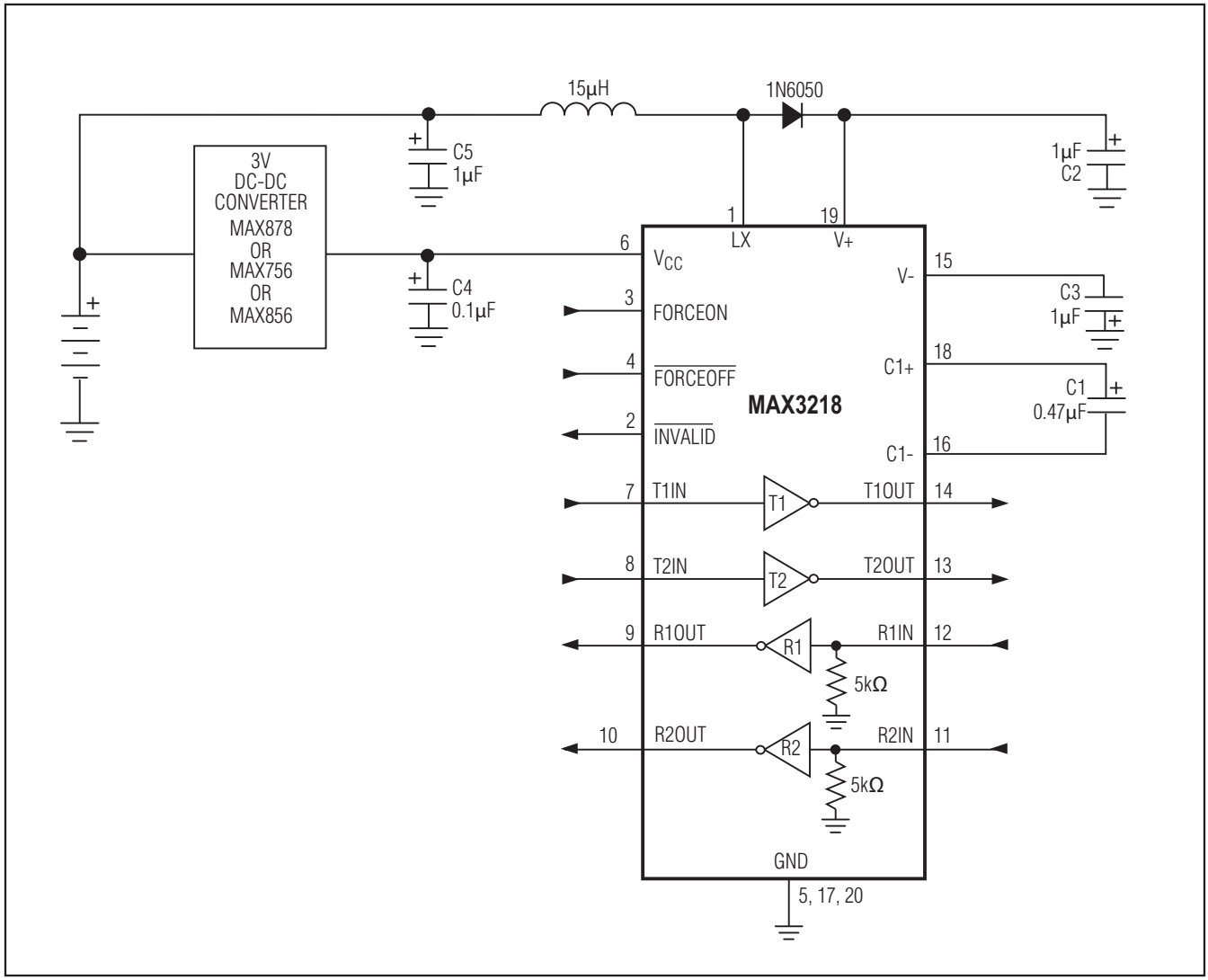

Figure 6. Operating from Unregulated and Regulated Supplies

+3V-Powered EIA/TIA-232 and EIA/TIA-562 Transceivers from Maxim

PART	SUPPLY VOLTAGE (V)	No. OF TRANSMITTERS/ RECEIVERS	No. OF RECEIVERS ACTIVE IN SHUTDOWN	GUARANTEED DATA RATE (kbps)	EIA/TIA-232 OR 562	FEATURES
MAX212	3.0 to 3.6	3/5	5	120	232	Drives mice
MAX3212	2.7 to 3.6	3/5	5	120	232	AutoShutdown, complementary receiver, drives mice, transient detection
MAX218	1.8 to 4.25	2/2	2	120	232	Operates directly from a battery without a voltage regulator
MAX3218	1.8 to 4.25	2/2	2	120	232	Same as MAX218 but with AutoShutdown
MAX560	3.0 to 3.6	4/5	2	120	562	Pin-compatible with MAX213
MAX561	3.0 to 3.6	4/5	0	120	562	Pin-compatible with MAX214
MAX562	2.7 to 5.25	3/5	5	230	562	Wide supply range
MAX563	3.0 to 3.6	2/2	2	120	562	0.1µF capacitors
MAX3222	3.0 to 5.5	2/2	2	120	232	0.1µF capacitors
MAX3223	3.0 to 5.5	2/2	2	120	232	AutoShutdown, 0.1µF capacitors
MAX3232	3.0 to 5.5	2/2	2	120	232	Pin-compatible with MAX232
MAX3241	3.0 to 5.5	3/5	5	120	232	0.1µF capacitors, 2 complementary receivers, drives mice
MAX3243	3.0 to 5.5	3/5	1	120	232	0.1µF capacitors, AutoShutdown, complementary receiver, drives mice

Chip Topography

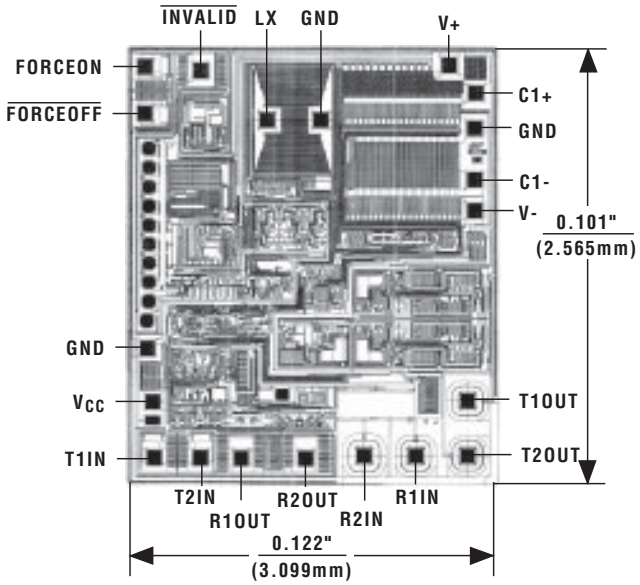

TRANSISTOR COUNT: 571
SUBSTRATE CONNECTED TO GND

Package Information

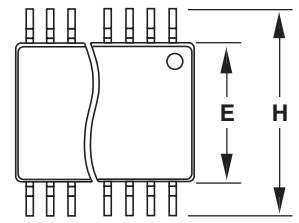

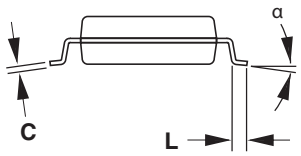

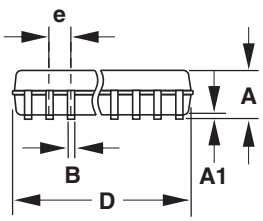

SSOP
SHRINK
SMALL OUTLINE
PACKAGE

DIM	INCHES		MILLIMETERS	
	MIN	MAX	MIN	MAX
A	0.068	0.078	1.73	1.99
A1	0.002	0.008	0.05	0.21
B	0.010	0.015	0.25	0.38
C	0.004	0.008	0.09	0.20
D	SEE VARIATIONS			
E	0.205	0.209	5.20	5.38
e	0.0256 BSC		0.65 BSC	
H	0.301	0.311	7.65	7.90
L	0.025	0.037	0.63	0.95
α	0°	8°	0°	8°

DIM	PINS	INCHES		MILLIMETERS	
		MIN	MAX	MIN	MAX
D	14	0.239	0.249	6.07	6.33
D	16	0.239	0.249	6.07	6.33
D	20	0.278	0.289	7.07	7.33
D	24	0.317	0.328	8.07	8.33
D	28	0.397	0.407	10.07	10.33

21-0056A

Revision History

REVISION NUMBER	REVISION DATE	DESCRIPTION	PAGES CHANGED
0	3/95	Initial release	—
1	4/18	Added lead-free designation to part numbers in *Ordering Information*	1
2	5/18	Removed MAX3218C/D and MAX3218EPP+ from *Ordering Information*	1

For pricing, delivery, and ordering information, please contact Maxim Direct at 1-888-629-4642, or visit Maxim Integrated's website at www.maximintegrated.com.

Maxim Integrated cannot assume responsibility for use of any circuitry other than circuitry entirely embodied in a Maxim Integrated product. No circuit patent licenses are implied. Maxim Integrated reserves the right to change the circuitry and specifications without notice at any time. The parametric values (min and max limits) shown in the Electrical Characteristics table are guaranteed. Other parametric values quoted in this data sheet are provided for guidance.

Maxim Integrated and the Maxim Integrated logo are trademarks of Maxim Integrated Products, Inc. © 2018 Maxim Integrated Products, Inc.