19-1471; Rev 5; 9/02

MAXIM

±15kV ESD-Protected, 12V, Dual RS-232 Serial Port with Low-Power Standby for Motherboards/Desktops

General Description

The MAX3209E is a complete, dual DTE RS-232 serial port (6 transmitters, 10 receivers) for motherboards and desktop PCs that ensures compliance with the stringent ESD requirements of the European Community. The device minimizes board space and power consumption by eliminating the need for a negative power supply; it integrates two serial ports and a charge pump into a single 38-pin TSSOP package.

The MAX3209E features a 50µA low-power standby mode for compliance with system power-management requirements. During standby, while the device operates from the single +3V to +5.5V logic supply, one receiver on each port remains active, allowing automatic system wake-up when peripheral communications resume.

All transmitter outputs and receiver inputs are protected to ±15kV using IEC 1000-4-2 Air-Gap Discharge, ±8kV using IEC 1000-4-2 Contact Discharge, and ±15kV using the Human Body Model, making the device ideal for use in harsh environments or mission-critical equipment. In addition, the MAX3209E withstands ±4kV per IEC 1000-4-4 Electrical Fast Transient/Burst Stressing. As a result of its robust charge-pump structure, the MAX3209E guarantees mouse driveability and true RS-232 operation at data rates up to 460kbps, ensuring compatibility with PC-to-PC communication software (such as LapLink™).

Applications

Desktop PCs

Motherboards

Instruments

Equipment Requiring IEC 1000-4-2 Compliance

Telecommunications

Network Servers

Typical Operating Circuit appears at end of data sheet.

Pin Configurations continued at end of data sheet.

LapLink is a trademark of Traveling Software.

Features

- **Two Complete Serial Ports in a Single 38-Pin TSSOP Package**
- **Requires Only +12V Supply and Logic Supply (+3V to +5.5V)**
- **No Negative Supply Required**
- **One Receiver Active per Port in Standby for System Wake-Up**
- **460kbps Data Rate; LapLink Compatible**
- **Enhanced ESD Protection**
  - **±15kV—Human Body Model**
  - **±8kV—IEC 1000-4-2, Contact Discharge**
  - **±15kV—IEC 1000-4-2, Air-Gap Discharge**
- **±4kV Fast Transient Burst Immunity per IEC 1000-4-4**
- **Low 50µA Standby Current**
- **Operates with Either +3V or +5V Logic**
- **Guaranteed Mouse Driveability**
- **Small 0.1µF Capacitors**
- **Flow-Through Pinout**

Ordering Information

PART	TEMP RANGE	PIN-PACKAGE
MAX3209ECUU	0°C to +70°C	38 TSSOP
MAX3209EEUU	-40°C to +85°C	38 TSSOP
MAX3209EEGL	-40°C to +85°C	6 × 6 40 QFN

Pin Configurations

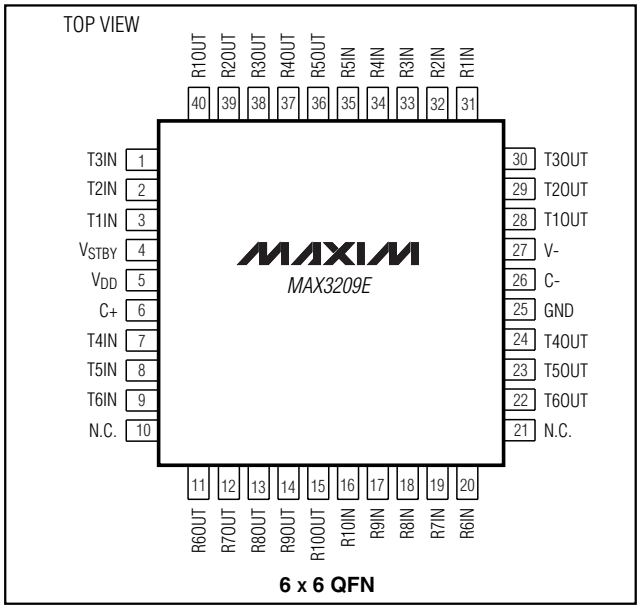

6 x 6 QFN

For pricing, delivery, and ordering information, please contact Maxim/Dallas Direct! at 1-888-629-4642, or visit Maxim's website at www.maxim-ic.com.

±15kV ESD-Protected, 12V, Dual RS-232 Serial Port with Low-Power Standby for Motherboards/Desktops

ABSOLUTE MAXIMUM RATINGS

V_{DD} .....-0.3V to +15V
V_{STBY} ..... -0.3V to +7V
V- ..... +0.3V to -15V
Input Voltages
  T_IN .....-0.3V to +7V
  R_IN .....±30V
Output Voltages
  T_OUT.....±15V
  R_OUT.....-0.3V to (V_{STBY} + 0.3V)
Short-Circuit Duration
  T_OUT (one at a time).....Continuous
  R_OUT (one at a time).....Continuous
Continuous Power Dissipation (T_A = +70°C)
  TSSOP (derate 11.8mW/°C above +70°C) 941mW
  QFN 6 × 6mm (derate 23.2mW/°C above +70°C).....1860mW
Operating Temperature Ranges
  MAX3209EC_ _ .....0°C to +70°C
  MAX3209EE_ _ .....-40°C to +85°C
Storage Temperature Range .....-65°C to +150°C
Lead Temperature (soldering, 10s) .....+300°C

Stresses beyond those listed under "Absolute Maximum Ratings" may cause permanent damage to the device. These are stress ratings only, and functional operation of the device at these or any other conditions beyond those indicated in the operational sections of the specifications is not implied. Exposure to absolute maximum rating conditions for extended periods may affect device reliability.

ELECTRICAL CHARACTERISTICS

(V_{DD} = +10.8V to +13.2V, V_{STBY} = +3V to +5.5V, C1 = C2 = 0.1µF, T_A = T_{MIN} to T_{MAX}, unless otherwise noted. Typical values are at T_A = +25°C, V_{DD} = +12V, V_{STBY} = +3.3V.)

PARAMETER	SYMBOL	CONDITIONS		MIN	TYP	MAX	UNITS
DC CHARACTERISTICS							
Operating Voltage Range	V_{DD}			10.8		13.2	V
	STBY			3		5.5	
Supply Current	I_{DD}	V_{DD} = +12V, no load, all transmitter inputs at V_{STBY}, all receiver inputs at V_{STBY} or unconnected			0.5	1	mA
	I_{STBY}	V_{DD} = 0, V_{STBY} = +3.3V, no load, all transmitter inputs at V_{STBY}, all receiver inputs at V_{STBY} or unconnected			50	100	µA
TRANSMITTER LOGIC INPUTS							
Input Logic Threshold Low	V_{ILT}	T_IN				0.4	V
Input Logic Threshold High	V_{IHT}	T_IN, V_{STBY} = +3V to +5.25V		2.1			V
Input Pull-Up Current		Transmitter input at GND				25	µA
RECEIVER LOGIC OUTPUTS							
Output Voltage Low	V_{OLR}	R_OUT; I_{SINK} = 1.6mA				0.4	V
Output Voltage High	V_{OHR}	R_OUT	I_{SOURCE} = 40µA	V_{STBY} - 0.3			V
			I_{SOURCE} = 1mA	V_{STBY} - 0.6			
Receiver Output Leakage Current		V_{DD} = 0, V_{STBY} = 5V			0.05	±5	µA
RS-232 TRANSMITTER OUTPUTS							
Output Voltage Swing		All transmitter outputs loaded with 3kΩ to GND		±5.0			V
RS-232 Output Short-Circuit Current		V_{T_OUT} = 0			±10	±60	mA
Transmitter Output Resistance		V_{DD} = V_{STBY} = 0, V_{OUT} = ±2V		300			Ω
RS-232 RECEIVER INPUTS							
Receiver Input Voltage Range				-25		25	V
RS-232 Input Threshold Low		T_A = +25°C				0.4	V
RS-232 Input Threshold High		T_A = +25°C		2.4			V
RS-232 Input Hysteresis		V_{STBY} = 3.3V		0.2		1	V
RS-232 Input Resistance		T_A = +25°C		3	5	7	kΩ

ELECTRICAL CHARACTERISTICS (continued)

(V_{DD} = +10.8V to +13.2V, V_{STBY} = +3V to +5.5V, C1 = C2 = 0.1µF, T_A = T_{MIN} to T_{MAX}, unless otherwise noted. Typical values are at T_A = +25°C, V_{DD} = +12V, V_{STBY} = +3.3V.)

PARAMETER	SYMBOL	CONDITIONS	MIN	TYP	MAX	UNITS
ESD/BURST CHARACTERISTICS						
ESD Protection		Human Body Model		±15		kV
		IEC 1000-4-2 (Contact Discharge)		±8		
		IEC 1000-4-2 (Air-Gap Discharge)		±15		
Electrical Fast Transient/Burst Immunity		IEC 1000-4-4		±4		kV
TRANSMITTER TIMING CHARACTERISTICS (Figure 1)						
Data Rate	DR	R_L = 3kΩ to 7kΩ, C_L = 50pF to 1000pF, two transmitters switching		460		kbps
Mouse Driveability		T1IN = T2IN = GND, T3IN = V_{CC}, T3OUT loaded with 3kΩ to GND, T1OUT and T2OUT loaded with 2.5mA each	+6		-5	V
Transmitter Output Propagation Delay, Low to High	t_{PLHT}	C_L = 1000pF		1		µs
Transmitter Output Propagation Delay, High to Low	t_{PHLT}	C_L = 1000pF		1		µs
Transmitter Output Slew Rate	SR	R_L = 3kΩ to 7kΩ, V_{STBY} = 3.3V, C_L = 50pF to 470pF, T_A = +25°C, measured from +3V to -3V or -3V to +3V	6	12	30	V/µs
		R_L = 3kΩ to 7kΩ, V_{STBY} = 3.3V, C_L = 50pF to 1000pF, T_A = +25°C, measured from +3V to -3V or -3V to +3V	4	12	30	
RECEIVER TIMING CHARACTERISTICS						
Receiver Output Propagation Delay, Low to High	t_{PLHR}	C_L = 150pF		0.4	1	µs
Receiver Output Propagation Delay, High to Low	t_{PHLR}	C_L = 150pF		0.4	1	µs

±15kV ESD-Protected, 12V, Dual RS-232 Serial Port with Low-Power Standby for Motherboards/Desktops

Typical Operating Characteristics

(V_{STBY} = +5V, V_{DD} = +12V, C1 = C2 = 0.1µF, T_A = +25°C, unless otherwise noted.)

SUPPLY CURRENT vs. SUPPLY VOLTAGE

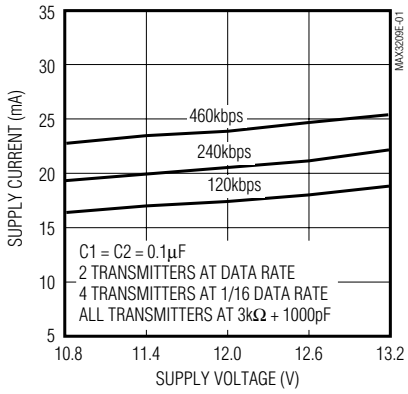

SUPPLY CURRENT vs. LOAD CAPACITANCE

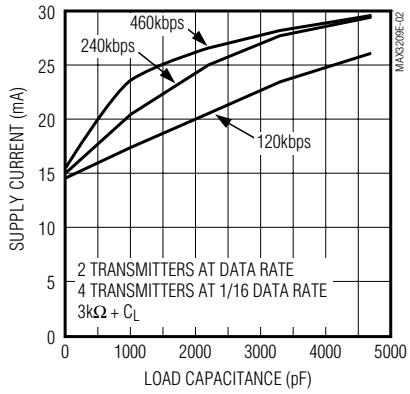

RECEIVER OUTPUT LOW VOLTAGE vs. SINK CURRENT

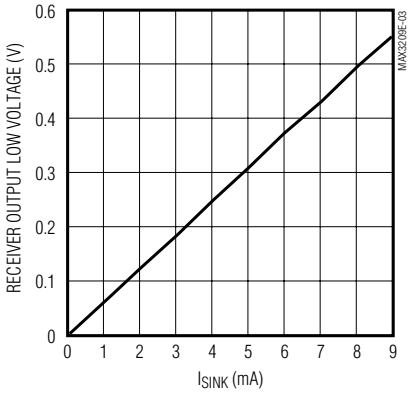

RECEIVER OUTPUT HIGH VOLTAGE vs. SOURCE CURRENT

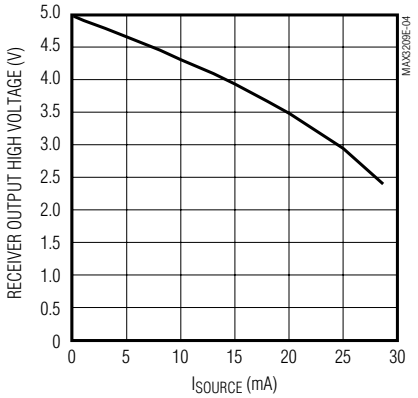

Pin Description

PIN		NAME	FUNCTION
TSSOP	QFN		
1–5, 15–19	11–15, 36–40	R_OUT	TTL/CMOS Receiver Outputs
6, 7, 8, 12, 13, 14	1, 2, 3, 7, 8, 9	T_IN	TTL/CMOS Transmitter Inputs
9	4	V_{STBY}	Standby Power Supply for R5 and R10
10	5	V_{DD}	+12V Single-Supply Voltage
11	6	C+	Positive Terminal of the Inverting Charge-Pump Capacitor
20–24, 34–38	16–20, 31–35	R_IN	RS-232 Receiver Inputs
25, 26, 27, 31, 32, 33	22, 24, 28, 30	T_OUT	RS-232 Transmitter Outputs
28	25	GND	Ground (for QFN package, connect the exposed pad and corner tabs to GND)
29	26	C-	Negative Terminal of the Inverting Charge-Pump Capacitor
30	27	V-	-12V Generated by the Inverting Charge Pump
—	10, 21	N.C.	No Connection. Not internally connected.

Detailed Description

±15kV ESD Protection

As with all Maxim devices, ESD-protection structures are incorporated on all pins to protect against electrostatic discharges (ESD) encountered during handling and assembly. The MAX3209E driver outputs and receiver inputs have extra protection against static electricity found in normal operation. Maxim's engineers developed state-of-the-art structures to protect these pins against ±15kV ESD, without damage. After an ESD event, the MAX3209E continues working without latchup.

ESD protection can be tested in several ways. The transmitter outputs and receiver inputs are characterized for protection to the following:

1) ±15kV using the Human Body Model
2) ±8kV using the Contact-Discharge Method specified in IEC 1000-4-2 (formerly IEC 801-2)
3) ±15kV using the Air-Gap Method specified in IEC 1000-4-2 (formerly IEC 801-2)

ESD Test Conditions

ESD performance depends on a number of conditions. Contact Maxim for a reliability report that documents test setup, methodology, and results.

Human Body Model

Figure 2a shows the Human Body Model, and Figure 2b shows the current waveform it generates when discharged into a low impedance. This model consists of a 100pF capacitor charged to the ESD voltage of interest, which is then discharged into the device through a 1.5kΩ resistor.

IEC 1000-4-2

Since January 1996, all equipment manufactured and/or sold in the European community has been required to meet the stringent IEC 1000-4-2 specification. The IEC 1000-4-2 standard covers ESD testing and performance of finished equipment; it does not specifically refer to integrated circuits. The MAX3209E helps you design equipment that meets Level 4 (the highest level) of IEC 1000-4-2, without additional ESD-protection components.

The main difference between tests done using the Human Body Model and IEC 1000-4-2 is higher peak current in IEC 1000-4-2. Because series resistance is lower in the IEC 1000-4-2 ESD test model (Figure 3a), the ESD withstand voltage measured to this standard is generally lower than that measured using the Human Body Model. Figure 3b shows the current waveform for the ±8kV IEC 1000-4-2 Level 4 ESD Contact-Discharge test.

The Air-Gap test involves approaching the device with a charge probe. The Contact-Discharge method connects the probe to the device before the probe is energized.

Machine Model

The Machine Model for ESD testing uses a 200pF storage capacitor and zero-discharge resistance. It mimics the stress caused by handling during manufacturing and assembly. Of course, all pins (not just RS-232

±15kV ESD-Protected, 12V, Dual RS-232 Serial Port with Low-Power Standby for Motherboards/Desktops

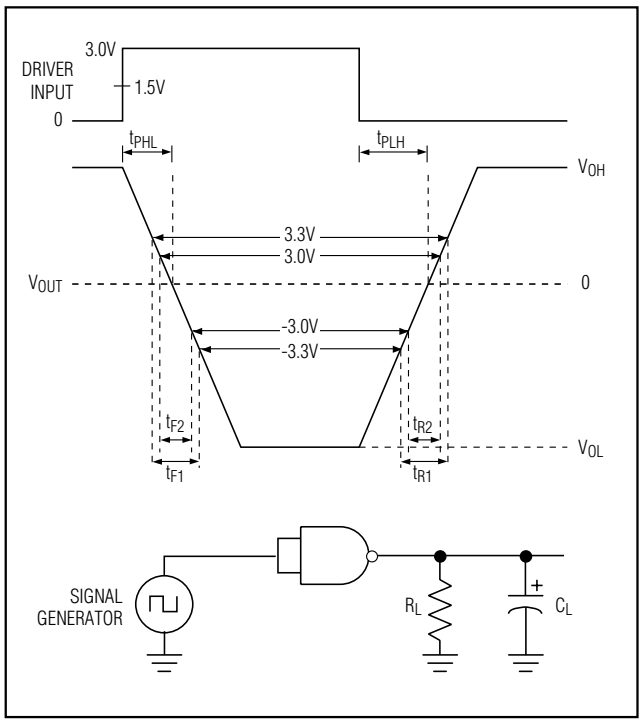

Figure 1. Slew-Rate Test Circuit and Timing Diagram

inputs and outputs) require this protection during manufacturing. Therefore, the Machine Model is less relevant to the I/O ports than are the Human Body Model and IEC 1000-4-2.

±4kV Electrical Fast Transient/Burst Testing (IEC 1000-4-4)

IEC 1000-4-4 Electrical Fast Transient/Burst (EFT/B) is an immunity test for the evaluation of electrical and electronic systems during operating conditions. The test was adapted for evaluation of integrated circuits with power applied. Repetitive fast transients with severe pulsed EMI were applied to signal and control ports. Over 15,000 distinct discharges per minute are sent to each interface port of the IC or equipment under test (EUT) simultaneously with a minimum test duration time of one minute. This simulates stress due to displacement current from electrical transients on AC mains, or other telecommunication lines in close proximity. Short rise times and very specific repetition rates are essential to the validity of the test.

Stress placed on the EUT is severe. In addition to the controlled individual discharges placed on the EUT, extraneous noise and ringing on the transmission line can multiply the number of discharges as well as

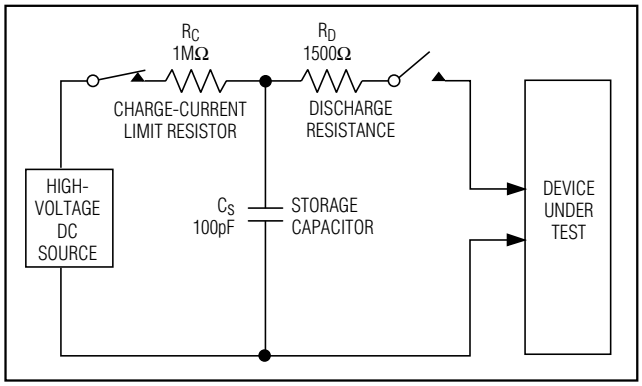

Figure 2a. Human Body ESD Test Model

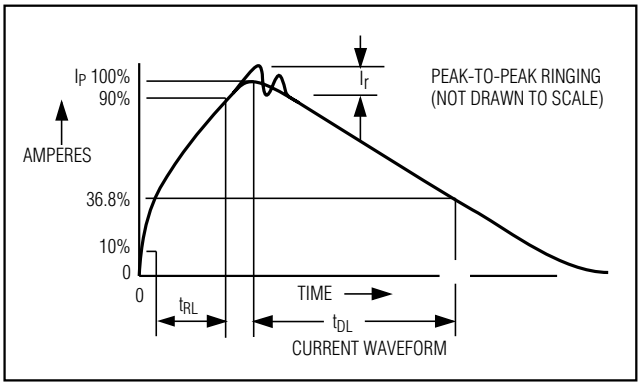

Figure 2b. Human Body Model Current Waveform

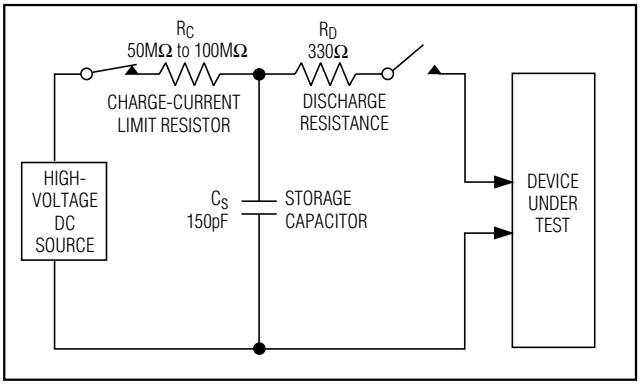

Figure 3a. IEC 1000-4-2 ESD Test Model

increase the magnitude of each discharge. All cabling was left unterminated to simulate worst case reflections.

The MAX3209E was set up as specified in IEC 1000-4-4 and the *Typical Operating Circuit* of this data sheet. The amplitude, pulse rise time, pulse duration, pulse repetition period, burst duration, and burst period (Figure 5) of the burst generator were all verified with a

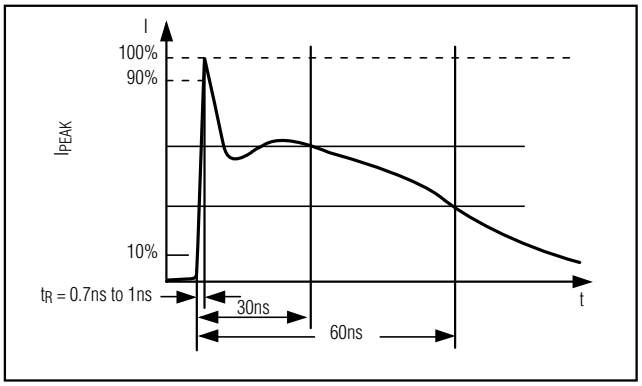

Figure 3b. IEC 1000-4-2 ESD-Generator Current Waveform

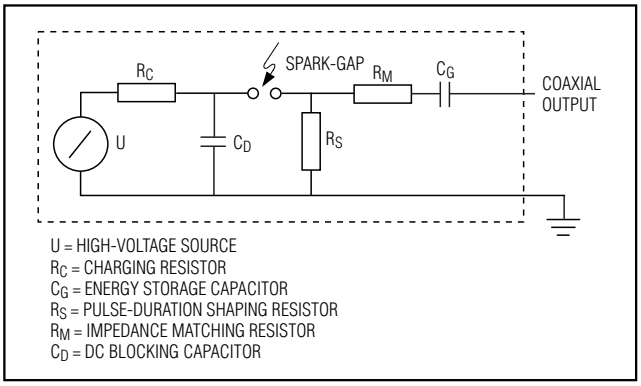

Figure 4. Simplified circuit diagram of a fast transient/burst generator

digital oscilloscope according to the specifications in IEC 1000-4-4 sec. 6.1.1 and 6.1.2. A simplified diagram of the EFT/B generator is shown in Figure 4. The burst stresses were applied to R1IN–R10IN and T1OUT–T6OUT simultaneously.

IEC 1000-4-4 provides several levels of test severity (see Table 1). The MAX3209E passes the 4000V stress, a special category "X" the beyond the highest level for severe (transient) industrial environments for telecommunication lines.

The stresses are applied while the MAX3209E is powered up. Test results are reported as:

1) Normal performance within the specification limits.
2) Temporary degradation or loss of function or performance which is self-recoverable.
3) Temporary degradation, loss of function or performance requiring operator intervention, such as system reset.
4) Degradation or loss of function not recoverable due to damage.

The MAX3209E meets classification 2 listed above. Additionally, the MAX3209E will not latchup during the IEC burst stress events.

Applications Information

R5 and R10 Active in Standby Mode

The MAX3209E is placed in standby mode when V_{DD} is not present, provided that V_{STBY} remains at +3V to +5.5V. In standby mode, receivers R5 and R10 remain active, consuming 100µA max while unloaded. Standby mode allows activity to be sensed on the serial ports so that main power can be restored by the power-management unit, as shown in Figure 6.

Layout Considerations

Use proper layout to ensure other devices on your board are not damaged in an ESD strike. Currents as high as 60A can instantaneously pass into ground, so be sure to minimize the ground-lead return path to the power supply. A separate return path to the power supply is recommend. Trace widths should be greater than 40 mils. Bypass V_{DD} and V_{STBY} with 0.1µF capacitors as close to the part as possible to ensure maximum ESD protection.

The MAX3209E is not sensitive to power-supply sequencing, and therefore requires no external protection diodes.

Interconnection with 3V and 5V Logic

The MAX3209E can directly interface with various 3V and 5V logic families, including ACT and HCT CMOS. See Table 2 for more information on possible combinations of interconnections.

Mouse Driveability

The MAX3209E has been specifically designed to power serial mice while operating from low-voltage power supplies. It has been tested with leading mouse brands from manufacturers such as Microsoft and Logitech. The MAX3209E successfully drove all serial mice tested and met their respective current and voltage requirements.

Table 1. Test Severity Levels for Communication Lines

LEVEL	ON I/O, SIGNAL, DATA, AND CONTROL PORTS	EFT	INDUSTRIAL ELECTROMAGNETIC ENVIRONMENT
	PEAK VOLTAGE	REPITITION RATE (kHz)	
1	250	5	Well protected
2	500	5	Protected
3	1000	5	Typical
4	2000	5	Severe
X	4000	5	MAX3209E

Table 2. Logic Family Compatibility with Various Supply Voltages

SYSTEM POWER-SUPPLY VOLTAGE (V)	V_{STBY} SUPPLY VOLTAGE (V)	COMPATIBILITY
3.3	3.3	Compatible with all CMOS families.
5	5	Compatible with all TTL and CMOS families.
5	3.3	Compatible with ACT and HCT CMOS, and with AC, HC, or CD4000 CMOS.

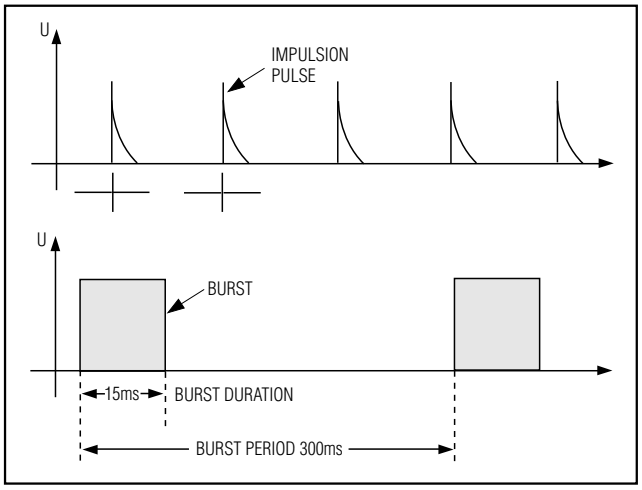

Figure 5. General Graph of a Fast Transient Burst

Chip Information

TRANSISTOR COUNT: 774

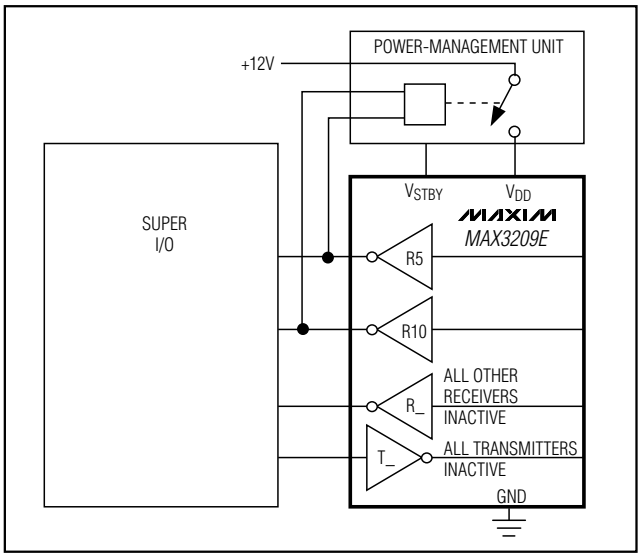

Figure 6. MAX3209E in Standby Mode

±15kV ESD-Protected, 12V, Dual RS-232 Serial Port with Low-Power Standby for Motherboards/Desktops

Typical Operating Circuit

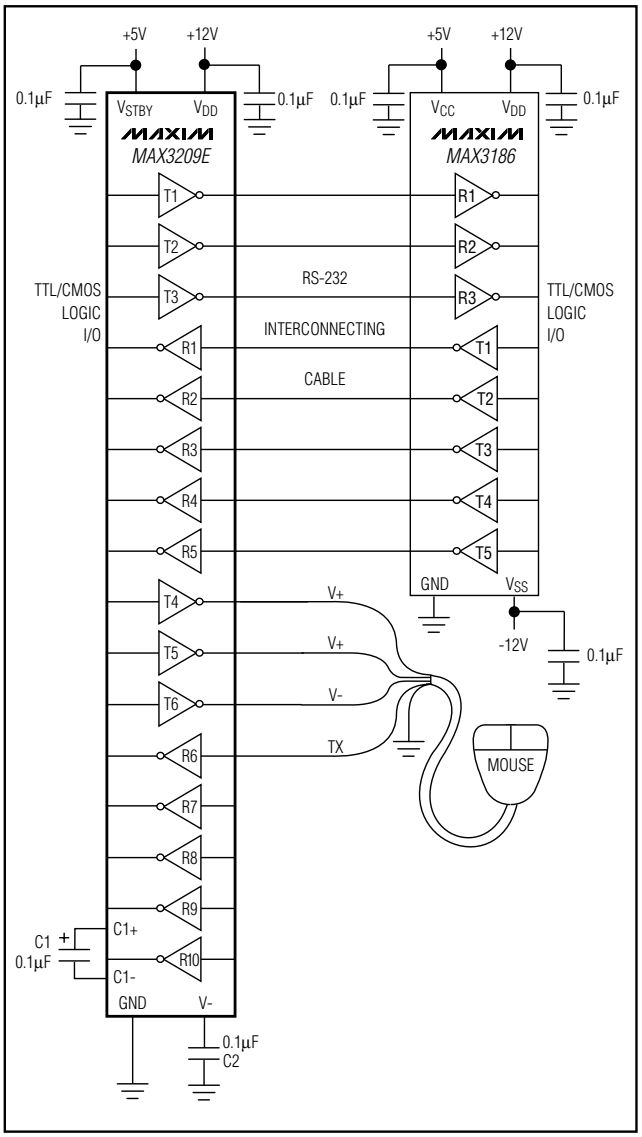

Pin Configurations (continued)

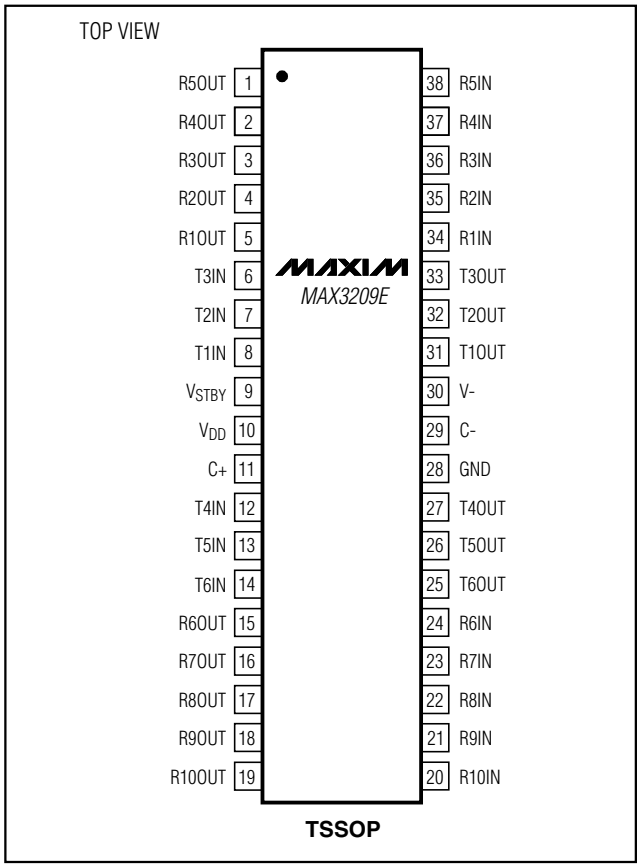

±15kV ESD-Protected, 12V, Dual RS-232 Serial Port with Low-Power Standby for Motherboards/Desktops

Package Information

(The package drawing(s) in this data sheet may not reflect the most current specifications. For the latest package outline information, go to **www.maxim-ic.com/packages**.)

TSSOP, 4.40mm.EPS

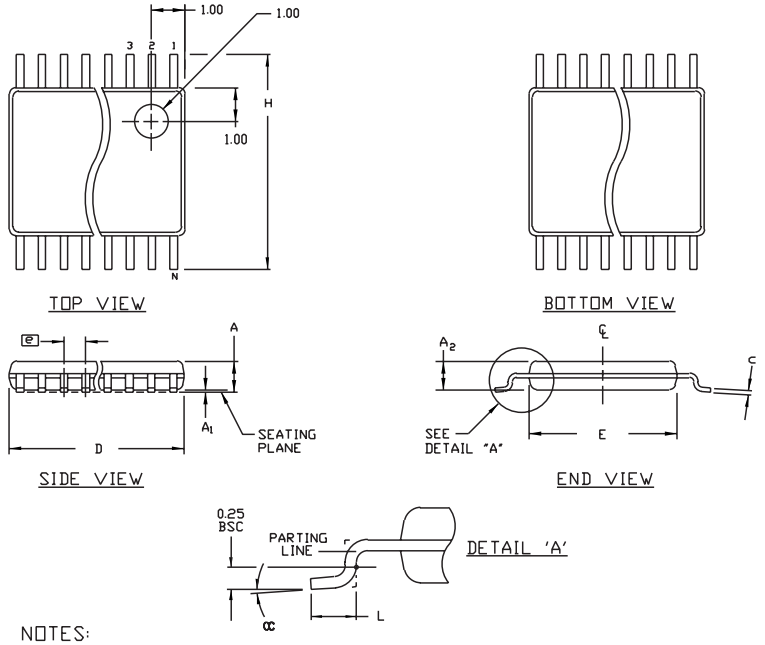

SYMBOL	COMMON DIMENSIONS			
	MILLIMETERS		INCHES	
	MIN.	MAX.	MIN.	MAX.
A	———	1.10		.043
A_1	0.05	0.15	.002	.006
A_2	0.85	0.95	.033	.037
b	0.17	0.27	.0067	.0106
b1	0.17	0.23	.0067	.009
c	0.090	0.20	.0035	.008
c1	0.090	0.135	.0035	.0053
D	9.60	9.80	.378	.3858
E	4.30	4.50	.169	.177
e	0.50 BSC		0.0197 BSC	
H	6.30	6.50	.248	.256
L	0.50	0.70	.020	.028
α	0°	8°	0°	8°

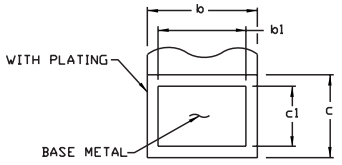

LEAD TIP DETAIL

NOTES:
1. DIMENSIONS D AND E DO NOT INCLUDE FLASH.
2. MOLD FLASH OR PROTRUSIONS NOT TO EXCEED .15 mm PER SIDE.
3. CONTROLLING DIMENSION: MILLIMETER.
4. MEETS JEDEC OUTLINE MO-153 VARIATION BD.

MAXIM
PROPRIETARY INFORMATION

TITLE: PACKAGE OUTLINE, 38L TSSOP, 4.40mm BODY, 0.5mm PITCH

APPROVAL	DOCUMENT CONTROL NO.	REV	
	21-0081	A	1/1

Package Information (continued)

(The package drawing(s) in this data sheet may not reflect the most current specifications. For the latest package outline information, go to **www.maxim-ic.com/packages**.)

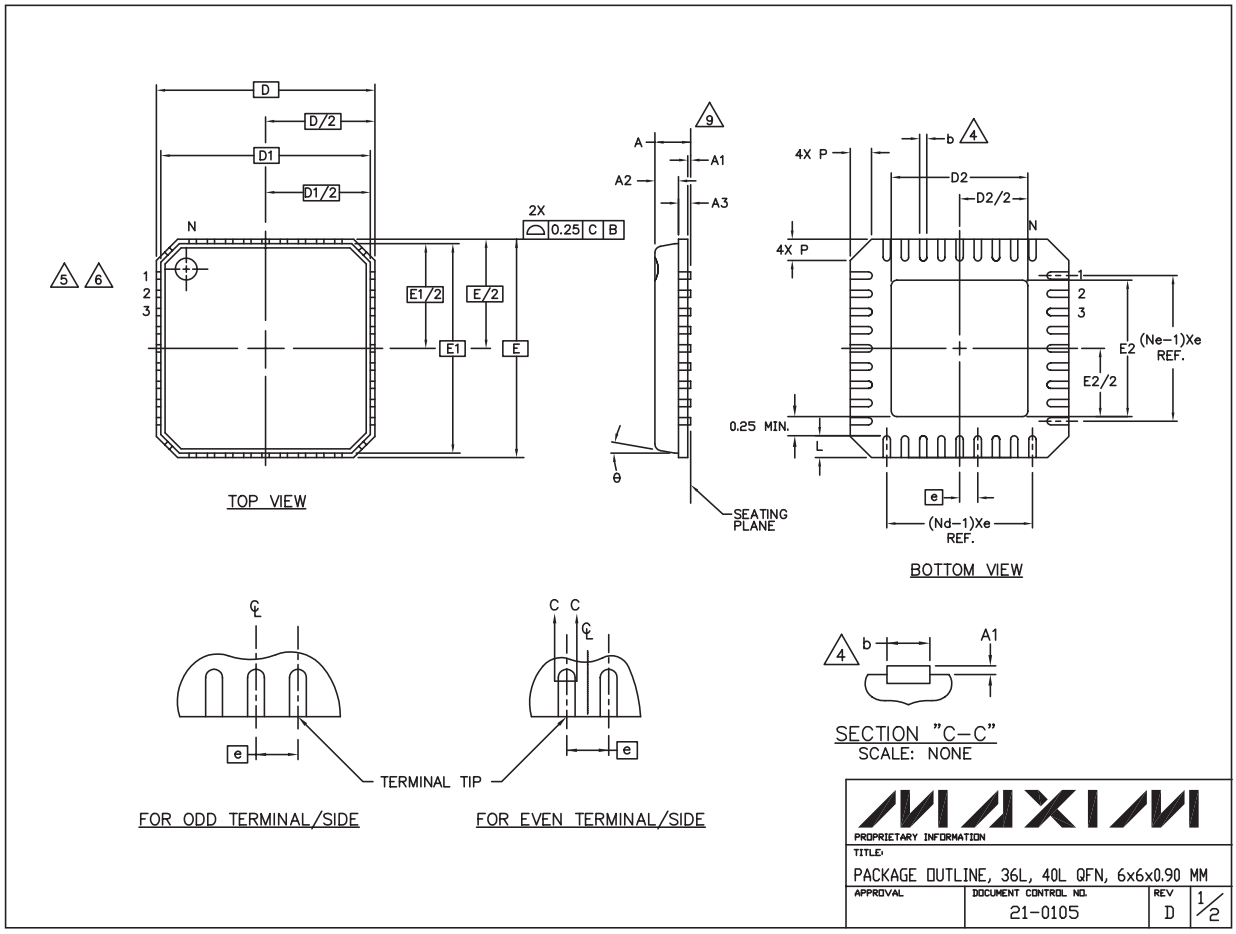

±15kV ESD-Protected, 12V, Dual RS-232 Serial Port with Low-Power Standby for Motherboards/Desktops

Package Information (continued)

(The package drawing(s) in this data sheet may not reflect the most current specifications. For the latest package outline information, go to **www.maxim-ic.com/packages**.)

NOTES:

1. DIE THICKNESS ALLOWABLE IS 0.305mm MAXIMUM (.012 INCHES MAXIMUM)
2. DIMENSIONING & TOLERANCES CONFORM TO ASME Y14.5M. – 1994.
3. N IS THE NUMBER OF TERMINALS.
   Nd IS THE NUMBER OF TERMINALS IN X–DIRECTION &
   Ne IS THE NUMBER OF TERMINALS IN Y–DIRECTION.
4. DIMENSION b APPLIES TO PLATED TERMINAL AND IS MEASURED BETWEEN 0.20 AND 0.25mm FROM TERMINAL TIP.
5. THE PIN #1 IDENTIFIER MUST BE EXISTED ON THE TOP SURFACE OF THE PACKAGE BY USING INDENTATION MARK OR INK/LASER MARKED.
6. EXACT SHAPE AND SIZE OF THIS FEATURE IS OPTIONAL.
7. ALL DIMENSIONS ARE IN MILLIMETERS.
8. PACKAGE WARPAGE MAX 0.05mm.
9. APPLIED FOR EXPOSED PAD AND TERMINALS.
   EXCLUDE EMBEDDING PART OF EXPOSED PAD FROM MEASURING.
10. MEETS JEDEC MO220.
11. THIS PACKAGE OUTLINE APPLIES TO ANVIL SINGULATION (STEPPED SIDES) AND TO SAW SINGULATION (STRAIGHT SIDES) QFN STYLES.

SYMBOL	COMMON DIMENSIONS			NOTE
	MIN.	NOM.	MAX.	
A	0.80	0.90	1.00	
A1	0.00	0.01	0.05	
A2	0.00	0.65	0.80	
A3		0.20 REF.		
D		6.00 BSC		
D1		5.75 BSC		
E		6.00 BSC		
E1		5.75 BSC		
θ	0°		12°	
P	0		0.60	
D2	1.75		4.25	
E2	1.75		4.25	

SYMBOL	PITCH VARIATION C						
	MIN.	NOM.	MAX.	NOTE	MIN.	NOM.	MAX.
e	0.50 BSC				0.50 BSC		
N	36			3	40		
Nd	9			3	10		
Ne	9			3	10		
L	0.50	0.60	0.75		0.30	0.40	0.50
b	0.18	0.23	0.30	4	0.18	0.23	0.30

MAXIM

PROPRIETARY INFORMATION

TITLE: PACKAGE OUTLINE, 36L, 40L QFN, 6x6x0.90 MM

APPROVAL	DOCUMENT CONTROL NO.	REV	
	21-0105	D	2/2

Maxim cannot assume responsibility for use of any circuitry other than circuitry entirely embodied in a Maxim product. No circuit patent licenses are implied. Maxim reserves the right to change the circuitry and specifications without notice at any time.

© 2002 Maxim Integrated Products Printed USA MAXIM is a registered trademark of Maxim Integrated Products.