19-0350; Rev 0; 12/94

MAXIM

Precision, Dual-Supply, SPST Analog Switches

General Description

The MAX320/MAX321/MAX322 are precision, dual, SPST analog switches designed to operate from ±3V to ±8V dual supplies. The MAX320 has two normally open (NO) switches and the MAX321 has two normally closed (NC) switches. The MAX322 has one NO and one NC switch. Low power consumption (1.25mW) makes these parts ideal for battery-powered equipment. They offer low leakage currents (100pA max) and fast switching speeds (t_{ON} = 150ns max, t_{OFF} = 100ns max).

The MAX320 series, powered from ±5V supplies, offers 35Ω max on-resistance (R_{ON}), 2Ω max matching between channels, and 4Ω max R_{ON} flatness.

These switches also offer 5pC max charge injection and a minimum of 2000V ESD protection per Method 3015.7.

For equivalent devices specified for single-supply operation, see the MAX323/MAX324/MAX325 data sheet. For quad versions of these switches, see the MAX391/MAX392/MAX393 data sheet.

Applications

Battery-Operated Systems	Sample-and-Hold Circuits
Heads-Up Displays	Guidance and Control Systems
Audio and Video Switching	Military Radios
Test Equipment	Communications Systems
±5V DACs and ADCs	PBX, PABX

Features

- **Low On-Resistance, 35Ω max (16Ω typical)**
- **R_{ON} Matching Between Channels <2Ω**
- **R_{ON} Flatness <4Ω**
- **Guaranteed Charge Injection <5pC**
- **Bipolar Supply Operation (±3V to ±8V)**
- **Low Power Consumption, <1.25mW**
- **Low Leakage Current Over Temperature, <2.5nA at +85°C**
- **Fast Switching, t_{ON} <150ns, t_{OFF} <100ns**
- **Guaranteed Break-Before-Make (MAX322 only)**

Ordering Information

PART	TEMP. RANGE	PIN-PACKAGE
MAX320CPA	0°C to +70°C	8 Plastic DIP
MAX320CSA	0°C to +70°C	8 SO
MAX320CUA	0°C to +70°C	8 µMAX
MAX320C/D	0°C to +70°C	Dice*
MAX320EPA	-40°C to +85°C	8 Plastic DIP
MAX320ESA	-40°C to +85°C	8 SO
MAX320EJA	-40°C to +85°C	8 CERDIP**
MAX320MJA	-55°C to +125°C	8 CERDIP**

Ordering Information continued at end of data sheet.

** Contact factory for dice specifications.*

*** Contact factory for availability.*

Pin Configurations/Functional Diagrams/Truth Tables

TOP VIEW

MAX320

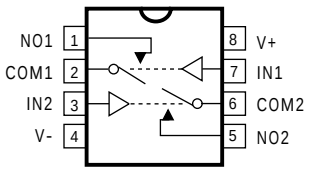

DIP/SO/µMAX

MAX320	
LOGIC	SWITCH
0	OFF
1	ON

MAX321

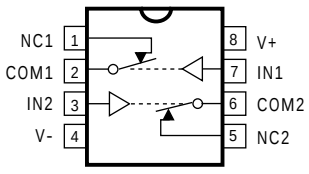

DIP/SO/µMAX

MAX321	
LOGIC	SWITCH
0	ON
1	OFF

MAX322

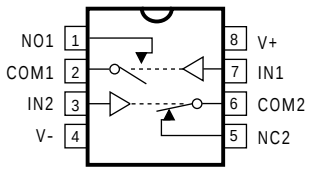

DIP/SO/µMAX

MAX322		
LOGIC	SWITCH 1	SWITCH 2
0	OFF	ON
1	ON	OFF

SWITCHES SHOWN FOR LOGIC "0" INPUT

Call toll free 1-800-998-8800 for free samples or literature.

Precision, Dual-Supply, SPST Analog Switches

ABSOLUTE MAXIMUM RATINGS

Voltage Referenced to V-
V+ .....(V- - 0.3V) to +17V
IN_, COM_, NC_, NO_ (Note 1).....(V- - 0.3V) to (V+ + 0.3V)
Continuous Current (any terminal).....30mA
Peak Current, COM_, NO_, NC_
(pulsed at 1ms, 10% duty cycle max) 100mA
ESD per Method 3015.7 .....>2000V
Continuous Power Dissipation
Plastic DIP (derate 9.09mW/°C above +70°C) 727mW
Narrow SO (derate 5.88mW/°C above +70°C) 471mW
µMAX (derate 4.10mW/°C above +70°C) 330mW
CERDIP (derate 8.00mW/°C above +70°C).....640mW
Operating Temperature Ranges
MAX32_C_ _ .....0°C to +70°C
MAX32_E_ _.....-40°C to +85°C
MAX32_MJA .....-55°C to +125°C
Storage Temperature Range.....-65°C to +150°C
Lead Temperature (soldering, 10sec) .....+300°C

Note 1: Signals on NC_, NO_, COM_, or IN_ exceeding V+ or V- are clamped by internal diodes. Limit forward diode current to maximum current rating.

Stresses beyond those listed under "Absolute Maximum Ratings" may cause permanent damage to the device. These are stress ratings only, and functional operation of the device at these or any other conditions beyond those indicated in the operational sections of the specifications is not implied. Exposure to absolute maximum rating conditions for extended periods may affect device reliability.

ELECTRICAL CHARACTERISTICS

(V+ = +5V ±10%, V- = -5V ±10%, V_{INH} = 3.5V, V_{INL} = 2.5V, T_A = T_{MIN} to T_{MAX}, unless otherwise noted.)

PARAMETER	SYMBOL	CONDITIONS			MIN	TYP (Note 2)	MAX	UNITS
ANALOG SWITCH								
Analog Signal Range	V_{COM}, V_{NO}, V_{NC}	(Note 3)			V-		V+	V
On-Resistance	R_{ON}	V+ = 4.5V, V- = -4.5V, I_{COM} = 1.0mA, V_{NO} or V_{NC} = ±3.5V	T_A = +25°C	C, E		16	35	Ω
				M		16	30	
			T_A = T_{MIN} to T_{MAX}				45	
On-Resistance Match Between Channels (Note 4)	ΔR_{ON}	V+ = 5V, V- = -5V, I_{COM} = 1.0mA, V_{NO} or V_{NC} = ±3V	T_A = +25°C			0.3	2	Ω
			T_A = T_{MIN} to T_{MAX}				4	
On-Resistance Flatness (Note 5)	$R_{FLAT(ON)}$	V+ = 5V, V- = -5V, I_{COM} = 1.0mA, V_{NO} or V_{NC} = ±3V	T_A = +25°C			1	4	Ω
			T_A = T_{MIN} to T_{MAX}				6	
NO or NC Off Leakage Current (Note 6)	$I_{NO(OFF)}$ or $I_{NC(OFF)}$	V+ = 5.5V, V- = -5.5V, V_{COM} = ±4.5V, V_{NO} or V_{NC} = ∓ 4.5V	T_A = +25°C		-0.1	0.01	0.1	nA
			T_A = T_{MIN} to T_{MAX}	C, E	-5		5	
				M	-40		40	
COM Off Leakage Current (Note 6)	$I_{COM(OFF)}$	V+ = 5.5V, V- = -5.5V, V_{COM} = ±4.5V, V_{NO} or V_{NC} = ∓ 4.5V	T_A = +25°C		-0.1	0.01	0.1	nA
			T_A = T_{MIN} to T_{MAX}	C, E	-5		5	
				M	-40		40	
COM On Leakage Current (Note 6)	$I_{COM(ON)}$	V+ = 5.5V, V- = -5.5V, V_{COM} = ±4.5V, V_{NO} or V_{NC} = ±4.5V	T_A = +25°C		-0.2	0.05	0.2	nA
			T_A = T_{MIN} to T_{MAX}	C, E	-10		10	
				M	-50		50	

ELECTRICAL CHARACTERISTICS

(V+ = +5V ±10%, V- = -5V ±10%, V_{INH} = 3.5V, V_{INL} = 2.5V, T_A = T_{MIN} to T_{MAX}, unless otherwise noted.)

PARAMETER	SYMBOL	CONDITIONS		MIN	TYP (Note 2)	MAX	UNITS
LOGIC INPUT							
Input Current with Input Voltage High	I_{INH}			-0.5	0.005	0.5	µA
Input Current with Input Voltage Low	I_{INL}			-0.5	0.005	0.5	µA
Input Voltage High	V_{INH}	V+ = 5V ±10%, V- ≤ 0V		3.5			V
		3V < V+ < 8V, V- ≤ 0V			V+ - 1.5		
Input Voltage Low	V_{INL}	V+ = 5V ±10%, V- ≤ 0V				2.5	V
		3V < V+ < 8V, V- ≤ 0V			V+ - 2.5		
DYNAMIC							
Turn-On Time	t_{ON}	V_{COM} = ±3V, Figure 2	T_A = +25°C		65	150	ns
			T_A = T_{MIN} to T_{MAX}			175	
Turn-Off Time	t_{OFF}	V_{COM} = ±3V, Figure 2	T_A = +25°C		35	100	ns
			T_A = T_{MIN} to T_{MAX}			150	
Break-Before-Make Time Delay (Note 3)	t_D	MAX322 only, R_L = 300Ω, C_L = 35pF, Figure 3		2	5		ns
Charge Injection (Note 3)	Q	C_L = 1.0nF, V_{GEN} = 0V, R_{GEN} = 0Ω, Figure 4	T_A = +25°C		2	5	pC
Off Isolation (Note 7)	OIRR	R_L = 50Ω, C_L = 5pF, f = 1MHz, Figure 5	T_A = +25°C		72		dB
Crosstalk (Note 8)		R_L = 50Ω, C_L = 5pF, f = 1MHz, Figure 6	T_A = +25°C		85		dB
NC or NO Capacitance	$C_{(OFF)}$	f = 1MHz, Figure 7	T_A = +25°C		9		pF
COM Off Capacitance	$C_{COM(OFF)}$	f = 1MHz, Figure 7	T_A = +25°C		9		pF
COM On Capacitance	$C_{COM(ON)}$	f = 1MHz, Figure 8	T_A = +25°C		22		pF
SUPPLY							
Power-Supply Range				±2.7		±8	V
Positive Supply Current	I+	V+ = 5.5V, V- = -5.5V, V_{IN} = 0V or V+, all channels on or off	T_A = +25°C	-125	80	125	µA
			T_A = T_{MIN} to T_{MAX}	-200		200	
Negative Supply Current	I-	V+ = 5.5V, V- = -5.5V, V_{IN} = 0V or V+, all channels on or off	T_A = +25°C	-125	80	125	µA
			T_A = T_{MIN} to T_{MAX}	-200		200	

Note 2: The algebraic convention where the most negative value is a minimum and the most positive value a maximum is used in this data sheet.
Note 3: Guaranteed by design.
Note 4: $\Delta R_{ON} = \Delta R_{ON}$ max - ΔR_{ON} min.
Note 5: Flatness is defined as the difference between the maximum and minimum value of on-resistance as measured over the specified analog signal range.
Note 6: Leakage parameters are 100% tested at maximum rated hot temperature and guaranteed by correlation at +25°C.
Note 7: Off Isolation = 20 $\log_{10}$ [V_{COM} / ($V_{NC\ or}$ V_{NO})], V_{COM} = output, $V_{NC\ or}$ V_{NO} = input to off switch.
Note 8: Between any two switches.

Precision, Dual-Supply, SPST Analog Switches

Typical Operating Characteristics

(V+ = +5V, V- = -5V, T_A = +25°C, unless otherwise noted.)

ON-RESISTANCE vs. VOLTAGE AT COM PIN

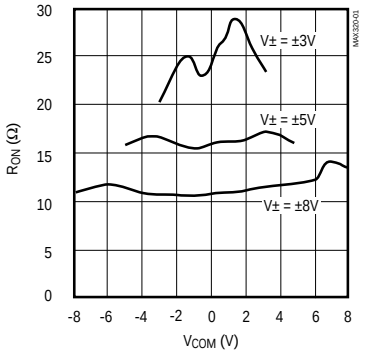

ON-RESISTANCE vs. VOLTAGE AT COM PIN (OVER TEMPERATURE)

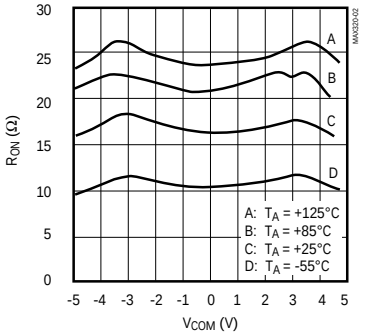

ON-RESISTANCE MATCH vs. VOLTAGE AT COM PIN (OVER TEMPERATURE)

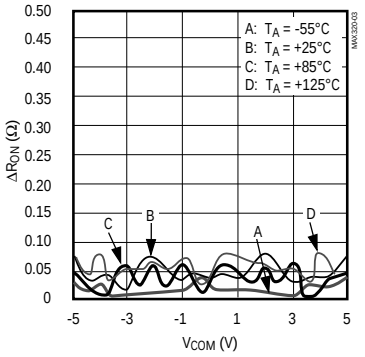

ON LEAKAGE CURRENT vs. TEMPERATURE

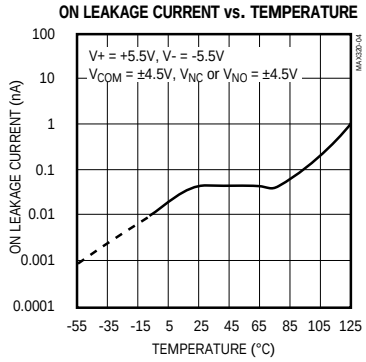

OFF LEAKAGE CURRENT vs. TEMPERATURE

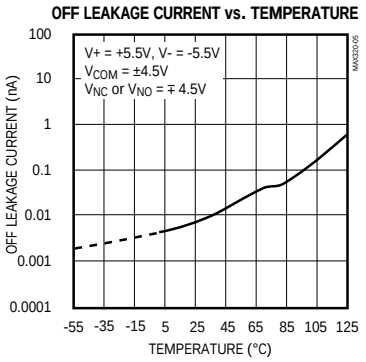

CHARGE INJECTION vs. VOLTAGE AT COM PIN

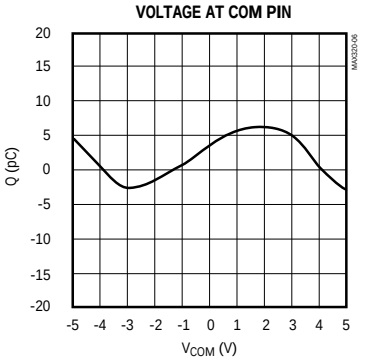

SUPPLY CURRENT vs. TEMPERATURE

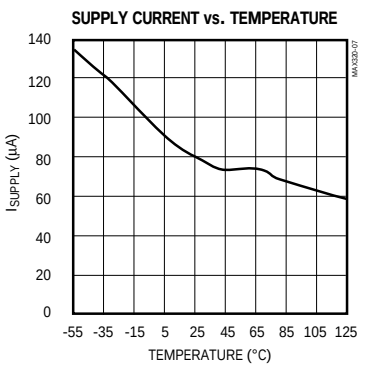

Pin Description

PIN	NAME	FUNCTION
1	NO1 (MAX320/MAX322)	Normally Open Analog Switch Terminal
	NC1 (MAX321)	Normally Closed Analog Switch Terminal
2, 6	COM1, COM2	Analog Switch Common Terminals
3, 7	IN2, IN1	Logic Inputs
4	V-	Negative Supply
5	NO2 (MAX320)	Normally Open Analog Switch Terminal
	NC2 (MAX321/MAX322)	Normally Closed Analog Switch Terminal
8	V+	Positive Supply

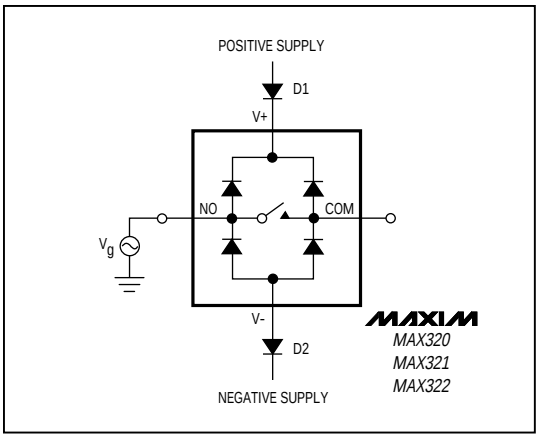

Figure 1. Overvoltage Protection Using Two External Blocking Diodes

Applications Information

Logic Levels

Calculate the logic thresholds typically as follows: V_{IH} = (V+ - 1.5V) and V_{IL} = (V+ - 2.5V).

Power-supply consumption is minimized when IN1 and IN2 are driven with logic-high levels equal to V+ and logic-low levels well below the calculated V_{IL} of (V+ - 2.5V). IN1 and IN2 can be driven to V- without damage.

Analog Signal Levels

Analog signals that range over the entire supply voltage (V- to V+) can be switched, with very little change in on-resistance over the entire voltage range (see *Typical Operating Characteristics*). All switches are bidirectional, so NO_, NC_, and COM_ pins can be used as either inputs or outputs.

Power-Supply Sequencing and Overvoltage Protection

Do not exceed the absolute maximum ratings, because stresses beyond the listed ratings may cause permanent damage to the devices.

Proper power-supply sequencing is recommended for all CMOS devices. Always apply V+, followed by V-, before applying analog signals or logic inputs, especially if the analog or logic signals are not current-limited. If this sequencing is not possible, and if the analog or logic inputs are not current-limited to <30mA, add two small signal diodes (D1, D2) as shown in Figure 1. Adding protection diodes reduces the analog signal range to a diode drop (about 0.7V) below V+ for D1, and a diode drop above V- for D2. Leakage is not affected by adding the diodes. On-resistance increases by a small amount at low supply voltages. Maximum supply voltage (V- to V+) must not exceed 17V.

Adding protection diode D1 causes the logic thresholds to be shifted relative to the positive power-supply rail. This can be significant when low positive supply voltages (+5V or less) are used. Driving IN1 and IN2 all the way to the supply rails (i.e., to a diode drop higher than the V+ pin or a diode drop lower than the V- pin) is always acceptable.

The protection diodes D1 and D2 also protect against some overvoltage situations. With the circuit of Figure 1, if the supply voltage is below the absolute maximum rating and if a fault voltage up to the absolute maximum rating is applied to an analog signal pin, no damage will result. For example, with ±5V supplies, analog signals up to ±8.5V will not damage the circuit of Figure 1. If only a single fault signal is present, the fault voltage can rise to +12V or to -12V without damage.

Precision, Dual-Supply, SPST Analog Switches

Test Circuits/Timing Diagrams

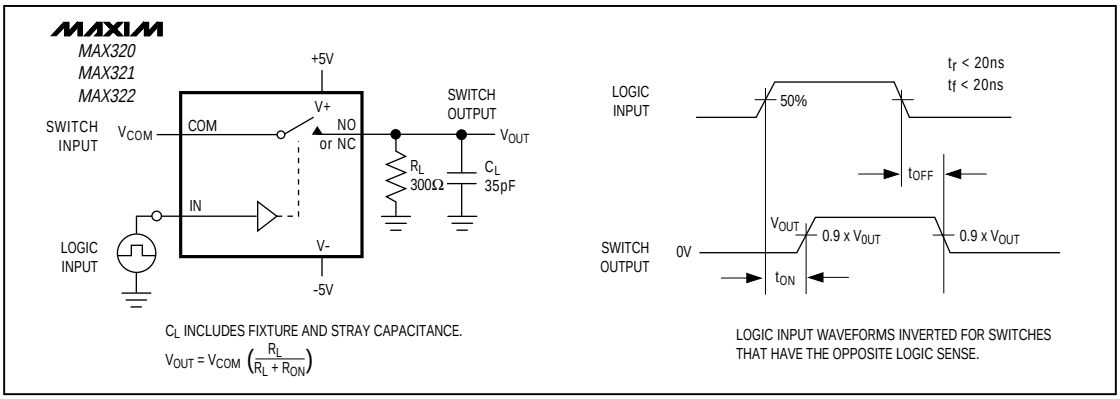

Figure 2. Switching Time

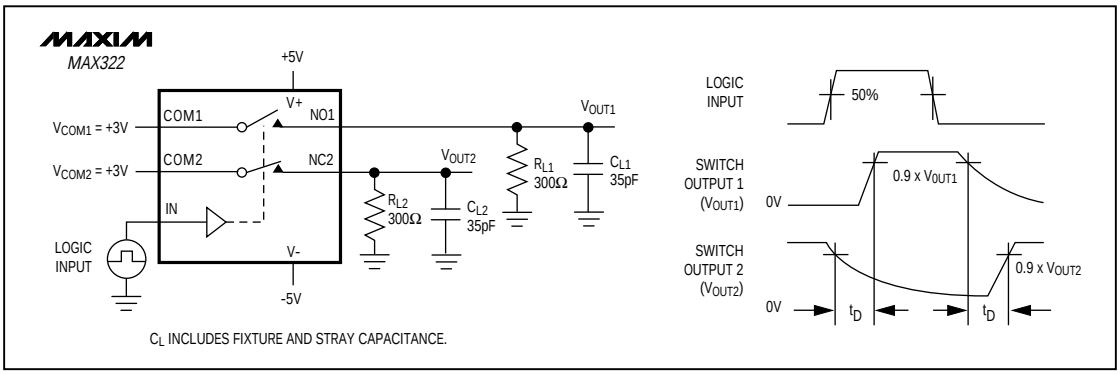

Figure 3. Break-Before-Make Interval (MAX322 only)

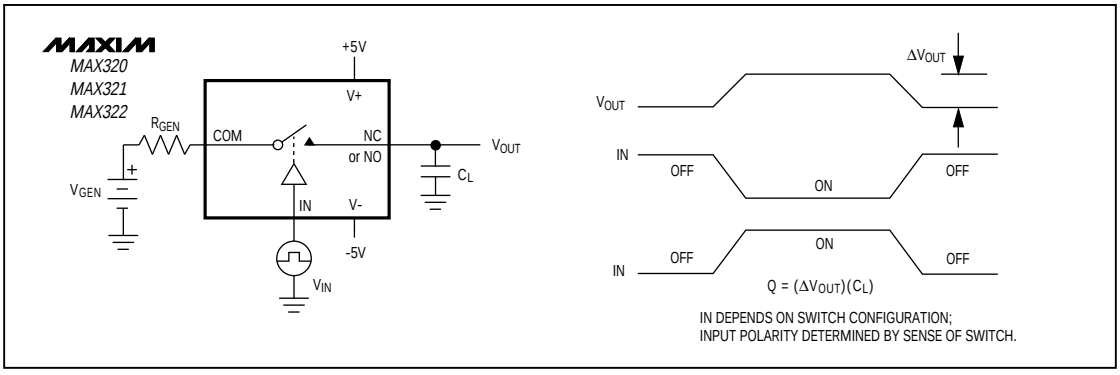

Figure 4. Charge Injection

Test Circuits/Timing Diagrams (continued)

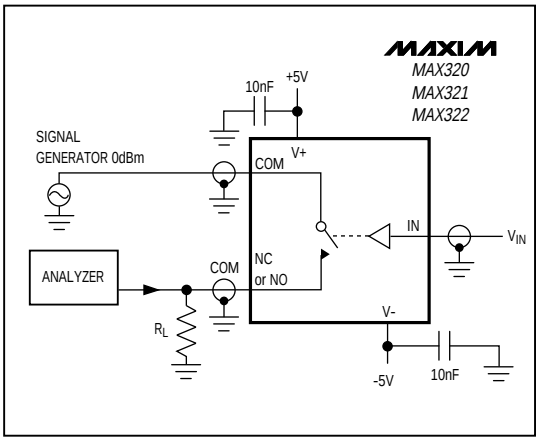

Figure 5. Off Isolation

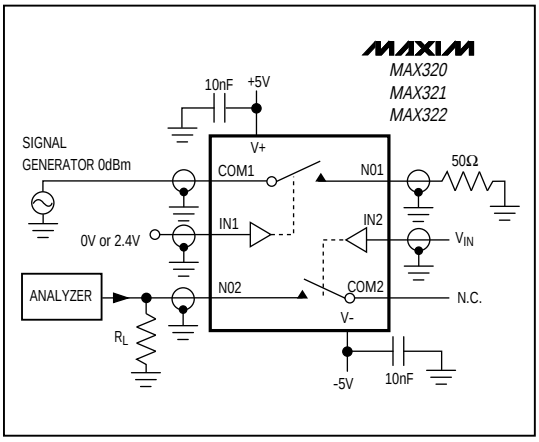

Figure 6. Crosstalk

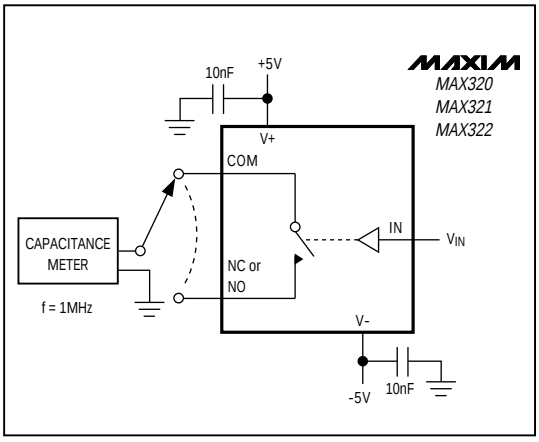

Figure 7. Channel-Off Capacitance

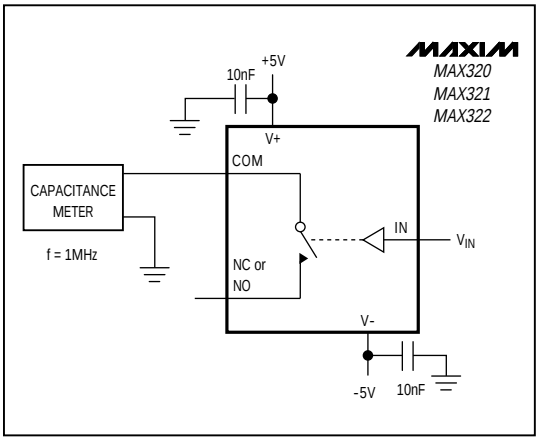

Figure 8. Channel-On Capacitance

Precision, Dual-Supply, SPST Analog Switches

Ordering Information (continued)

PART	TEMP. RANGE	PIN-PACKAGE
MAX321CPA	0°C to +70°C	8 Plastic DIP
MAX321CSA	0°C to +70°C	8 SO
MAX321CUA	0°C to +70°C	8 µMAX
MAX321C/D	0°C to +70°C	Dice*
MAX321EPA	-40°C to +85°C	8 Plastic DIP
MAX321ESA	-40°C to +85°C	8 SO
MAX321EJA	-40°C to +85°C	8 CERDIP**
MAX321MJA	-55°C to +125°C	8 CERDIP**
MAX322CPA	0°C to +70°C	8 Plastic DIP
MAX322CSA	0°C to +70°C	8 SO
MAX322CUA	0°C to +70°C	8 µMAX
MAX322C/D	0°C to +70°C	Dice*
MAX322EPA	-40°C to +85°C	8 Plastic DIP
MAX322ESA	-40°C to +85°C	8 SO
MAX322EJA	-40°C to +85°C	8 CERDIP**
MAX322MJA	-55°C to +125°C	8 CERDIP**

** Contact factory for dice specifications.*
*** Contact factory for availability.*

Chip Topography

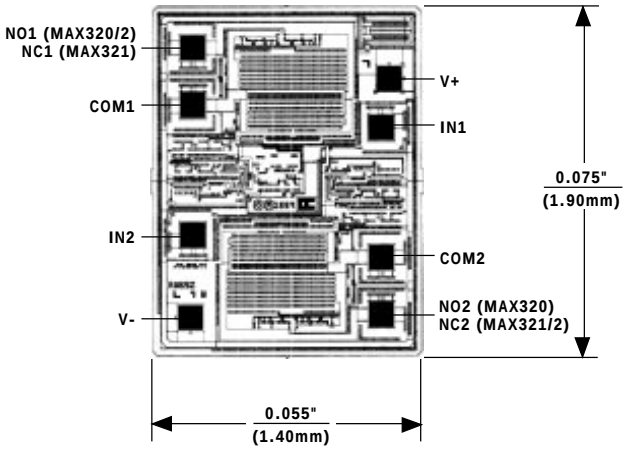

TRANSISTOR COUNT: 91
SUBSTRATE CONNECTED TO V+

Package Information

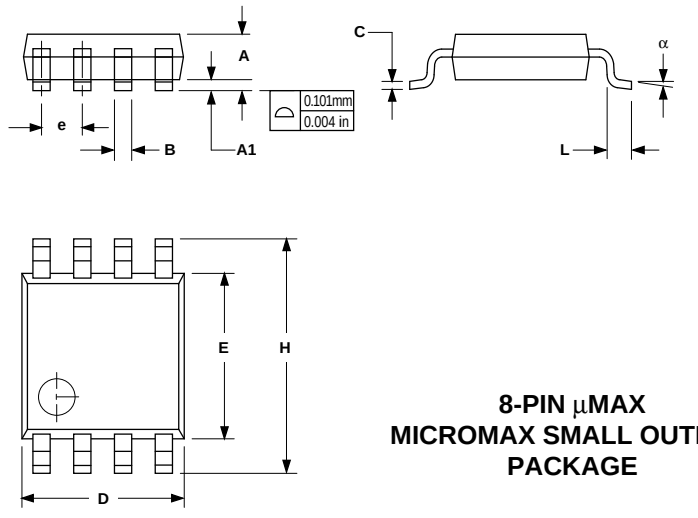

DIM	INCHES		MILLIMETERS	
	MIN	MAX	MIN	MAX
A	0.036	0.044	0.91	1.11
A1	0.004	0.008	0.10	0.20
B	0.010	0.014	0.25	0.36
C	0.005	0.007	0.13	0.18
D	0.116	0.120	2.95	3.05
E	0.116	0.120	2.95	3.05
e	0.0256		0.65	
H	0.188	0.198	4.78	5.03
L	0.016	0.026	0.41	0.66
α	0°	6°	0°	6°

8-PIN µMAX
MICROMAX SMALL OUTLINE
PACKAGE

Maxim cannot assume responsibility for use of any circuitry other than circuitry entirely embodied in a Maxim product. No circuit patent licenses are implied. Maxim reserves the right to change the circuitry and specifications without notice at any time.

© 1994 Maxim Integrated Products Printed USA MAXIM is a registered trademark of Maxim Integrated Products.