19-2737; Rev 0; 1/03

MAXIM

Quad, Rail-to-Rail, Fault-Protected, SPST Analog Switches

General Description

The MAX312F/MAX313F/MAX314F are quad, single-pole/single-throw (SPST), fault-protected analog switches. They are pin compatible with the industry-standard nonprotected MAX312/MAX313/MAX314. These switches feature fault-protected inputs and Rail-to-Rail® signal-handling capability. All analog signal terminals are protected from overvoltage faults up to ±36V with power on and up to ±40V with power off. During a fault condition, the COM_, NO_, or NC_ terminal becomes an open circuit and only microamperes of leakage current flow from the source. On-resistance is 10Ω (max) and is matched between switches to 0.5Ω (max) at +25°C.

The MAX312F has four normally closed (NC) switches. The MAX313F has four normally open (NO) switches. The MAX314F has two NC and two NO switches. These CMOS switches operate with dual power supplies ranging from ±4.5V to ±20V or a single supply between +9V and +36V. All digital inputs have +0.8V and +2.4V logic thresholds, ensuring both TTL and CMOS logic compatibility when using ±15V or a single +12V supply.

For supply voltages of ±5V, +5V, and +3V, refer to the MAX4711/MAX4712/MAX4713 data sheet.

Applications

Communications Systems

Signal Routing

Test Equipment

Data Acquisition

Industrial and Process Control Systems

Avionics

Redundant/Backup Systems

ATE

Hot Swap

Rail-to-Rail is a registered trademark of Nippon Motorola, Ltd.

Functional Diagram appears at end of data sheet.

Pin Configurations continued at end of data sheet.

Features

- **No Power-Supply Sequencing Required**
- **Rail-to-Rail Signal Handling**
- **All Switches Off with Power Off**
- **All Switches Off when V+ is Off and V- is On**
- **±40V Fault Protection with Power Off**
- **±36V Fault Protection with ±15V Supplies**
- **Control Line Fault Protection from V- - 0.3V to V- + 40V**
- **Pin Compatible with Industry-Standard DG411/DG412/DG413**
- **600ns (typ) Fault Response Time**
- **10Ω (max) R_{ON} with ±15V Supplies**
- **±4.5V to ±20V Dual Supplies**
- **+9V to +36V Single Supply**
- **TTL- and CMOS-Compatible Logic Inputs with ±15V or Single +9V to +15V Supplies**

Ordering Information

PART	TEMP RANGE	PIN-PACKAGE
MAX312FESE	-40°C to +85°C	16 SO
MAX312FEPE	-40°C to +85°C	16 Plastic DIP

Ordering Information continued at end of data sheet.

Pin Configurations

TOP VIEW

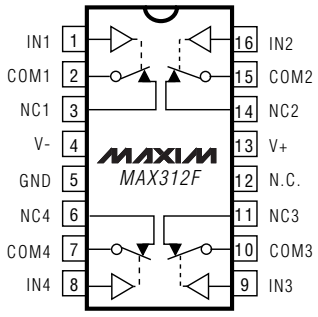

DIP/SO

MAX312F	
LOGIC	**SWITCH**
0	ON
1	OFF

N.C. = NOT CONNECTED. SWITCHES SHOWN FOR LOGIC 0 INPUT.
ALL SWITCHES ARE OFF WITH POWER REMOVED.

For pricing, delivery, and ordering information, please contact Maxim/Dallas Direct! at 1-888-629-4642, or visit Maxim's website at www.maxim-ic.com.

Quad, Rail-to-Rail, Fault-Protected, SPST Analog Switches

ABSOLUTE MAXIMUM RATINGS

(Voltages Referenced to GND.)
V+ .....-0.3V to +44V
V- .....-44V to +0.3V
V+ to V-.....-0.3V to +44V
IN_ ..... (V- - 0.3V) to (V- + 40V)
NO_, NC_ to COM_ (Note 1) ..... -40V to +40V
COM_, NO_, NC_ Voltage with Power On (Note 1)..... -36V to +36V
COM_, NO_, NC_ Voltage with Power Off (Note 1)..... -40V to +40V
Peak Current COM_, NO_, NC_ (pulsed at 1ms, 10% duty cycle) .....±300mA
Continuous Current (any other terminal)..... ±30mA
Continuous Current (COM_, NO_, NC_).....±100mA
Continuous Power Dissipation (T_A = +70°C)
16-Pin SO (derate 8.7mW/°C above +70°C).....696mW
16-Pin Plastic DIP (derate 10.53mW/°C above +70°C) 842mW
Operating Temperature Range ..... -40°C to +85°C
Junction Temperature ..... +150°C
Storage Temperature Range ..... -65°C to +160°C
Lead Temperature (soldering, 10s) ..... +300°C

Note 1: COM_, NO_, and NC_ pins are fault protected. Signals on COM_, NO_, and NC_ exceeding -36V to +36V may damage the device during power-on conditions. When the power is off, the maximum range is -40V to +40V.

Stresses beyond those listed under "Absolute Maximum Ratings" may cause permanent damage to the device. These are stress ratings only, and functional operation of the device at these or any other conditions beyond those indicated in the operational sections of the specifications is not implied. Exposure to absolute maximum rating conditions for extended periods may affect device reliability.

ELECTRICAL CHARACTERISTICS—±15V Dual Supplies

(V+ = +15V, V- = -15V, V_{IH} = +2.4V, V_{IL} = +0.8V, GND = 0V, T_A = T_{MIN} to T_{MAX}, unless otherwise noted. Typical values are at T_A = +25°C.) (Notes 2, 3)

PARAMETER	SYMBOL	CONDITIONS	T_A	MIN	TYP	MAX	UNITS
ANALOG SWITCH							
Fault-Free Analog Signal Range	$V_{COM_}$, $V_{NO_}$, $V_{NC_}$		E	V-		V+	V
On-Resistance	R_{ON}	$I_{COM_}$ = 10mA; $V_{NO_}$, $V_{NC_}$ = ±10V	+25°C		8	10	Ω
			E			13	
On-Resistance Match Between Channels (Note 4)	ΔR_{ON}	$I_{COM_}$ = 10mA; $V_{NO_}$, $V_{NC_}$ = ±10V	+25°C		0.05	0.5	Ω
			E			0.75	
On-Resistance Flatness (Note 5)	$R_{FLAT(ON)}$	$I_{COM_}$ = 10mA; $V_{NO_}$, $V_{NC_}$ = ±5V, 0V	+25°C		0.25	1	Ω
			E			1.25	
NO_, NC_ Off-Leakage Current (Note 6)	$I_{NO_(OFF)}$, $I_{NC_(OFF)}$	$V_{COM_}$ = ±10V; $V_{NO_}$, $V_{NC_}$ = ∓10V	+25°C	-1		+1	nA
			E	-60		+60	
COM_ Off-Leakage Current (Note 6)	$I_{COM_(OFF)}$	$V_{COM_}$ = ±10V; $V_{NO_}$, $V_{NC_}$ = ∓10V	+25°C	-1		+1	nA
			E	-60		+60	
COM_ On-Leakage Current (Note 6)	$I_{COM_(ON)}$	$V_{COM_}$ = ±10V; $V_{NO_}$, $V_{NC_}$ = ±10V or floating	+25°C	-2		+2	nA
			E	-60		+60	
FAULT							
Fault-Protected Analog Signal Range	$V_{COM_}$, $V_{NO_}$, $V_{NC_}$	V+ = +15V, V- = -15V	E	-36		+36	V
		V+ = 0V, V- = -15V	E	-36		+36	
		V+ = V- = 0V	E	-40		+40	
NO_ or NC_ Off-Leakage Current (Note 6)	$I_{NO_(OFF)}$, $I_{NC_(OFF)}$	$V_{NO_}$, $V_{NC_}$ = ±36V; V+ = +15V, 0V; V- = -15V	+25°C	-1		+1	µA
			E	-10		+10	
COM_ Off-Leakage Current (Note 6)	$I_{COM_(OFF)}$	$V_{COM_}$ = ±36V; V+ = +15V, 0V; V- = -15V	+25°C	-1		+1	µA
			E	-10		+10	

ELECTRICAL CHARACTERISTICS—±15V Dual Supplies (continued)

(V+ = +15V, V- = -15V, V_{IH} = +2.4V, V_{IL} = +0.8V, GND = 0V, T_A = T_{MIN} to T_{MAX}, unless otherwise noted. Typical values are at T_A = +25°C.) (Notes 2, 3)

PARAMETER	SYMBOL	CONDITIONS	T_A	MIN	TYP	MAX	UNITS
NO_ or NC_ Leakage Current (Note 6)	$I_{NO_}$, $I_{NC_}$	$V_{NO_}$, $V_{NC_}$ = ±40V; V+ = V- = 0V	+25°C	-1		+1	µA
			E	-10		+10	
COM_ Leakage Current (Note 6)	$I_{COM_}$	$V_{COM_}$ = ±40V; V+ = V- = 0V	+25°C	-1		+1	µA
			E	-10		+10	
Fault-Trip Threshold			E	V- - 0.4		V+ + 0.4	V
± Fault Response Time	t_{RES}	$V_{NO_}$, $V_{NC_}$ = ±36V; R_L = 300Ω	E		600		ns
± Fault Recovery Time	t_{REC}	$V_{NO_}$, $V_{NC_}$ = ±36V; R_L = 300Ω	E		1		µs
SWITCH DYNAMICS							
Turn-On Time	t_{ON}	$V_{NO_}$ or $V_{NC_}$ = ±10V, R_L = 300Ω, C_L = 35pF, Figure 2	+25°C		115	225	ns
			E			275	
Turn-Off Time	t_{OFF}	$V_{NO_}$ or $V_{NC_}$ = ±10V, R_L = 300Ω, C_L = 35pF, Figure 2	+25°C		70	185	ns
			E			235	
Break-Before-Make Time Delay (MAX314F Only) (Note 7)	t_{BBM}	$V_{NO_}$ or $V_{NC_}$ = ±10V, R_L = 100Ω, C_L = 10pF, Figure 3	+25°C	5	45		ns
			E	2			
Charge Injection	Q	V_{GEN} = 0V, R_{GEN} = 0Ω, C_L = 1nF, Figure 4	+25°C		70		pC
NO_ or NC_ Off-Capacitance	$C_{N_(OFF)}$	f = 1MHz, Figure 5	+25°C		20		pF
COM_ Off-Capacitance	$C_{COM_(OFF)}$	f = 1MHz, Figure 5	+25°C		20		pF
COM_ On-Capacitance	$C_{COM_(ON)}$	f = 1MHz, Figure 5	+25°C		43		pF
Off-Isolation (Note 8)	V_{ISO}	f = 1MHz, R_L = 50Ω, C_L = 15pF, P_{IN} = 0dBm, Figure 6	+25°C		-55		dB
Channel-to-Channel Crosstalk (Note 9)	V_{CT}	f = 1MHz, R_L = 50Ω, C_L = 15pF, P_{IN} = 0dBm, Figure 6	+25°C		-104		dB
LOGIC INPUT							
Input Logic High	V_{IH}		E	2.4			V
Input Logic Low	V_{IL}		E			0.8	V
Input Leakage Current	I_{IN}	$V_{IN_}$ = 0V or V+	E	-1		+1	µA
POWER SUPPLY							
Power-Supply Range	V+, V-		E	±4.5		±20	V
V+ Supply Current	I+	All $V_{IN_}$ = +5V, $V_{COM_}$ = 0V	+25°C		340	500	µA
			E			700	
		All $V_{IN_}$ = 0V or V+, $V_{COM_}$ = 0V	+25°C		140	250	
			E			350	

Quad, Rail-to-Rail, Fault-Protected, SPST Analog Switches

ELECTRICAL CHARACTERISTICS—±15V Dual Supplies (continued)

(V+ = +15V, V- = -15V, V_{IH} = +2.4V, V_{IL} = +0.8V, GND = 0V, T_A = T_{MIN} to T_{MAX}, unless otherwise noted. Typical values are at T_A = +25°C.) (Notes 2, 3)

PARAMETER	SYMBOL	CONDITIONS	T_A	MIN	TYP	MAX	UNITS
V- Supply Current	I-	All $V_{IN_}$ = +5V, $V_{COM_}$ = 0V	+25°C		140	200	µA
			E			300	
		All $V_{IN_}$ = 0V or V+, $V_{COM_}$ = 0V	+25°C		140	250	
			E			350	
GND Supply Current	I_{GND}	All $V_{IN_}$ = +5V, $V_{COM_}$ = 0V	+25°C		200	300	µA
			E			400	
		All $V_{IN_}$ = 0V or V+, $V_{COM_}$ = 0V	+25°C		0	1	
			E			10	

ELECTRICAL CHARACTERISTICS—Single +12V Supply

(V+ = +12V, V- = 0V, V_{IH} = +2.4V, V_{IL} = +0.8V, GND = 0V, T_A = T_{MIN} to T_{MAX}, unless otherwise noted. Typical values are at T_A = +25°C.) (Notes 2, 3)

PARAMETER	SYMBOL	CONDITIONS	T_A	MIN	TYP	MAX	UNITS
ANALOG SWITCH							
Fault-Free Analog Signal Range	$V_{COM_}$, $V_{NO_}$, $V_{NC_}$		E	0		V+	V
On-Resistance	R_{ON}	$I_{COM_}$ = 10mA; $V_{NO_}$, $V_{NC_}$ = +10V	+25°C		16	25	Ω
			E			30	
On-Resistance Match Between Channels (Note 4)	ΔR_{ON}	$I_{COM_}$ = 10mA; $V_{NO_}$, $V_{NC_}$ = +10V	+25°C		0.4	1.5	Ω
			E			2	
On-Resistance Flatness	$R_{FLAT(ON)}$	$I_{COM_}$ = 10mA; $V_{NO_}$, $V_{NC_}$ = +2V, +6V, +10V	+25°C		3	6	Ω
			E			7	
NO_, NC_ Off-Leakage Current (Note 6)	$I_{NO_(OFF)}$, $I_{NC_(OFF)}$	$V_{COM_}$ = +1V, +10V; $V_{NO_}$, $V_{NC_}$ = +10V, +1V	+25°C	-1		+1	nA
			E	-60		+60	
COM_ Off-Leakage Current (Note 6)	$I_{COM_(OFF)}$	$V_{COM_}$ = +1V, +10V; $V_{NO_}$, $V_{NC_}$ = +10V, +1V	+25°C	-1		+1	nA
			E	-60		+60	
COM_ On-Leakage Current (Note 6)	$I_{COM_(ON)}$	$V_{COM_}$ = +1V, +10V; $V_{NO_}$, $V_{NC_}$ = +1V, +10V, or floating	+25°C	-2		+2	nA
			E	-60		+60	
FAULT							
Fault-Protected Analog Signal Range	$V_{COM_}$, $V_{NO_}$, $V_{NC_}$	V+ = +12V, V- = 0V	E	-36		+36	V
		V+ = V- = 0V	E	-40		+40	
NO_ or NC_ Off-Leakage Current (Note 6)	$I_{NO_(OFF)}$, $I_{NC_(OFF)}$	$V_{NO_}$, $V_{NC_}$ = ±36V; V+ = +12V; V- = 0V	+25°C	-1		+1	µA
			E	-10		+10	
COM_ Off-Leakage Current (Note 6)	$I_{COM_(OFF)}$	$V_{NO_}$, $V_{NC_}$ = ±36V; V+ = +12V; V- = 0V	+25°C	-1		+1	µA
			E	-10		+10	
NO_ or NC_ Leakage Current (Note 6)	$I_{NO_}$, $I_{NC_}$	V+ = V- = 0V; $V_{NO_}$, $V_{NC_}$ = ±40V	+25°C	-1		+1	µA
			E	-10		+10	

ELECTRICAL CHARACTERISTICS—Single +12V Supply (continued)

(V+ = +12V, V- = 0V, V_{IH} = +2.4V, V_{IL} = +0.8V, GND = 0V, T_A = T_{MIN} to T_{MAX}, unless otherwise noted. Typical values are at T_A = +25°C.) (Notes 2, 3)

PARAMETER	SYMBOL	CONDITIONS	T_A	MIN	TYP	MAX	UNITS
COM_ Leakage Current (Note 6)	$I_{COM_}$	V+ = V- = 0V; $V_{NO_}$, $V_{NC_}$ = ±40V	+25°C	-1		+1	µA
			E	-10		+10	
Fault Response Time	t_{RES}	$V_{NO_}$, $V_{NC_}$ = +36V; R_L = 300Ω	E		200		ns
Fault Recovery Time	t_{REC}	$V_{NO_}$, $V_{NC_}$ = +36V; R_L = 300Ω	E		1		µs
SWITCH DYNAMICS							
Turn-On Time	t_{ON}	$V_{NO_}$ or $V_{NC_}$ = +10V, R_L = 300Ω, C_L = 35pF, Figure 2	+25°C		140	325	ns
			E			425	
Turn-Off Time	t_{OFF}	$V_{NO_}$ or $V_{NC_}$ = +10V, R_L = 300Ω, C_L = 35pF, Figure 2	+25°C		75	175	ns
			E			225	
Break-Before-Make Time Delay (MAX314F Only) (Note 6)	t_{BBM}	$V_{NO_}$ or $V_{NC_}$ = +10V, R_L = 100Ω, C_L = 10pF, Figure 3	+25°C	10	65		ns
			E	5			
Charge Injection	Q	V_{GEN} = 0V, R_{GEN} = 0Ω, C_L = 1nF, Figure 4	+25°C		-10		pC
LOGIC INPUT							
Input Logic High	V_{IH}		E	2.4			V
Input Logic Low	V_{IL}		E			0.8	V
Input Leakage Current (Note 6)	I_{IN}	$V_{IN_}$ = 0V or V+	E	-1		+1	µA
POWER SUPPLY							
Power-Supply Range	V+		E	+9		+36	V
V+ Supply Current	I+	All $V_{IN_}$ = +5V, $V_{COM_}$ = +6V	+25°C		160	300	µA
			E			400	
		All $V_{IN_}$ = 0V or V+, $V_{COM_}$ = +6V	+25°C		70	150	
			E			250	

Note 2: The algebraic convention is used in this data sheet; the most negative value is shown in the minimum column.
Note 3: Electrical specifications at -40°C are guaranteed by design and not production tested.
Note 4: $\Delta R_{ON} = R_{ON(MAX)} - R_{ON(MIN)}$.
Note 5: Flatness is defined as the difference between the maximum and minimum value of on-resistance over the specified analog signal range.
Note 6: Single-supply leakage parameters are guaranteed by testing with dual supplies at the maximum rated temperature.
Note 7: Guaranteed by design.
Note 8: Off-isolation = 20 $\log_{10}$ [V_{COM}/(V_{NC} or V_{NO})], V_{NC} or V_{NO} = output, V_{COM} = input to off switch.
Note 9: Between any two switches.

Quad, Rail-to-Rail, Fault-Protected, SPST Analog Switches

Typical Operating Characteristics

(T_A = +25°C, unless otherwise noted.)

ON-RESISTANCE vs. V_{COM} (DUAL SUPPLIES)

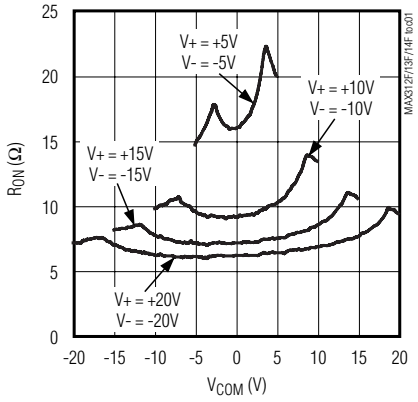

ON-RESISTANCE vs. V_{COM} AND TEMPERATURE (DUAL SUPPLIES)

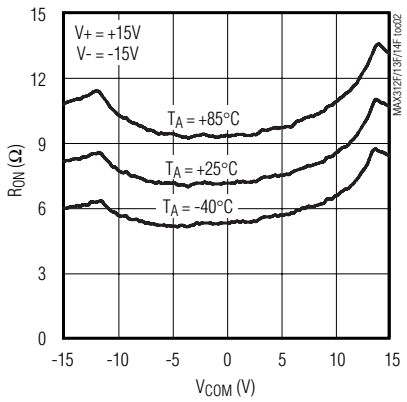

ON-RESISTANCE vs. V_{COM} (SINGLE SUPPLY)

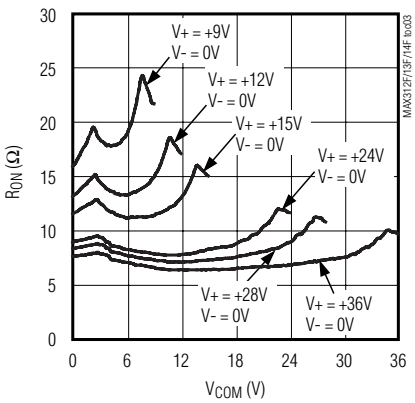

ON-RESISTANCE vs. V_{COM} AND TEMPERATURE (SINGLE SUPPLY)

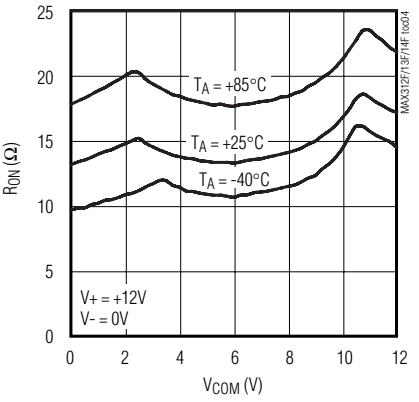

ON/OFF-LEAKAGE CURRENT vs. TEMPERATURE

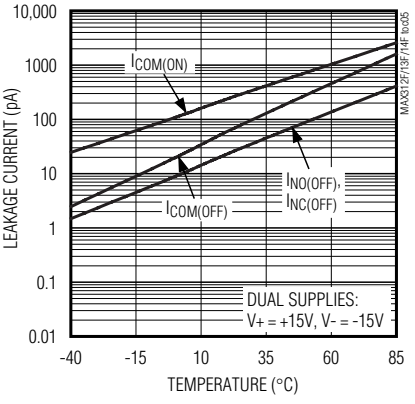

CHARGE INJECTION vs. V_{COM}

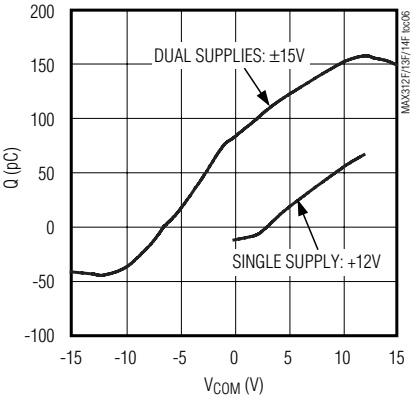

SUPPLY CURRENT vs. TEMPERATURE

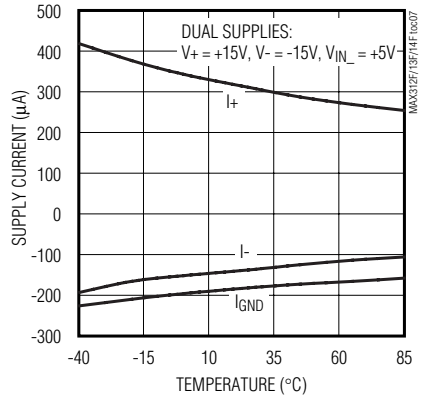

LOGIC-LEVEL THRESHOLD VOLTAGE vs. SUPPLY VOLTAGE

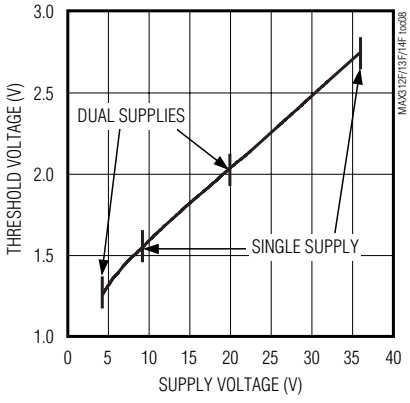

TURN-ON/TURN-OFF TIME vs. SUPPLY VOLTAGE (DUAL SUPPLIES)

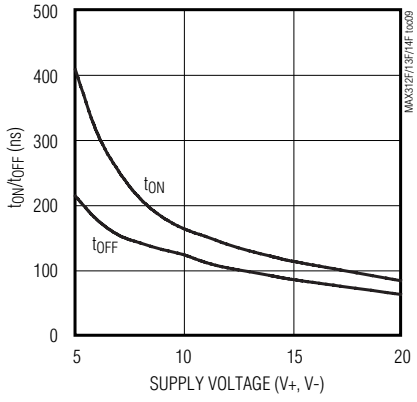

Typical Operating Characteristics (continued)

(T_A = +25°C, unless otherwise noted.)

TURN-ON/TURN-OFF TIME vs. SUPPLY VOLTAGE (SINGLE SUPPLY)

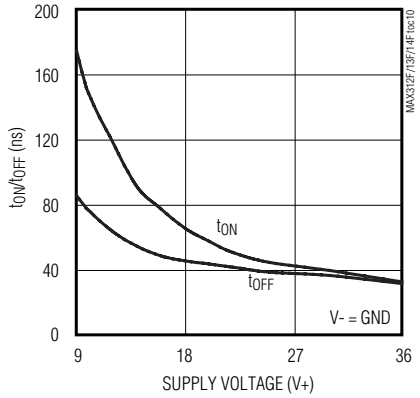

TURN-ON/TURN-OFF TIME vs. TEMPERATURE (DUAL SUPPLIES)

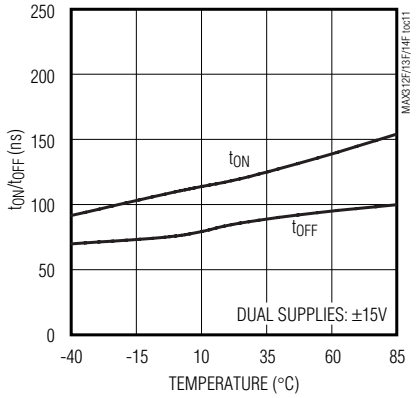

TURN-ON/TURN-OFF TIME vs. TEMPERATURE (SINGLE SUPPLY)

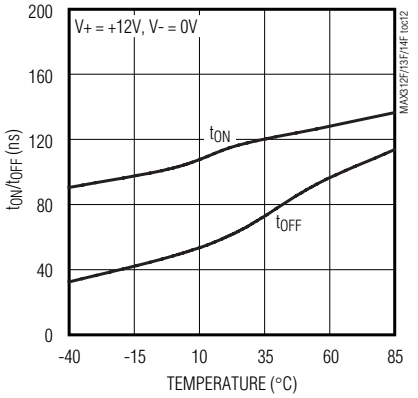

FREQUENCY RESPONSE

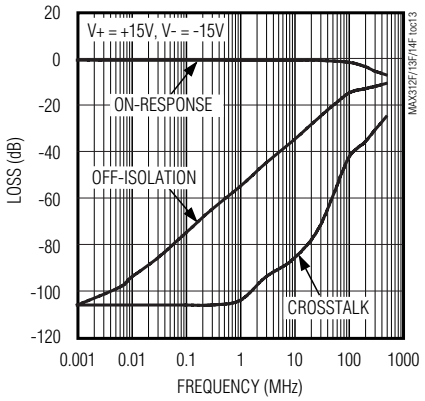

TOTAL HARMONIC DISTORTION PLUS NOISE vs. FREQUENCY

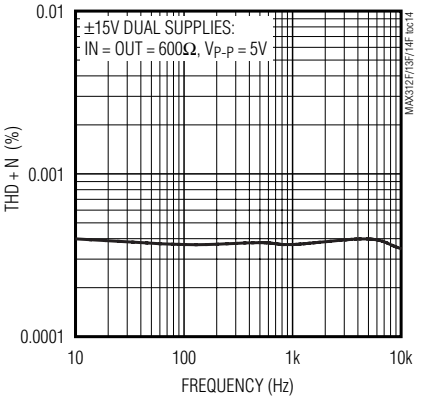

FAULT CURRENT vs. FAULT VOLTAGE (DUAL SUPPLIES)

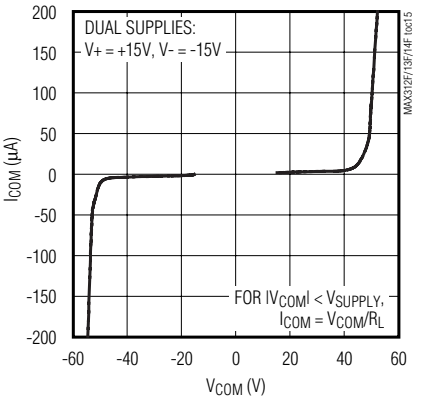

FAULT CURRENT vs. FAULT VOLTAGE (SINGLE SUPPLY)

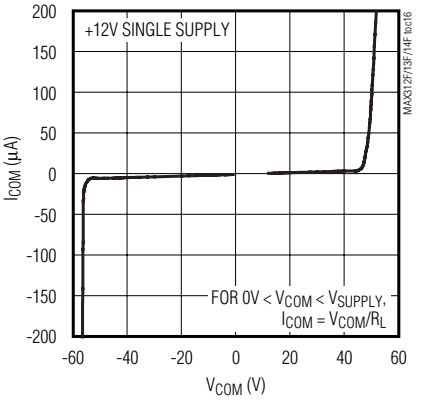

Quad, Rail-to-Rail, Fault-Protected, SPST Analog Switches

Typical Operating Characteristics (continued)

(T_A = +25°C, unless otherwise noted.)

INPUT OVERVOLTAGE vs. OUTPUT

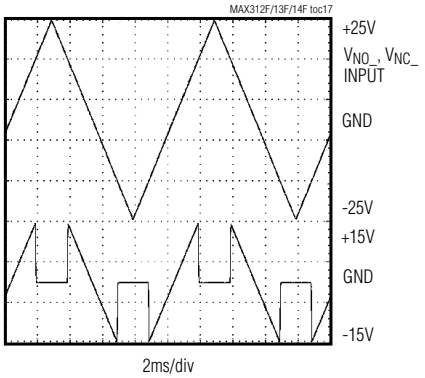

FAULT RECOVERY TIME (POSITIVE INPUT)

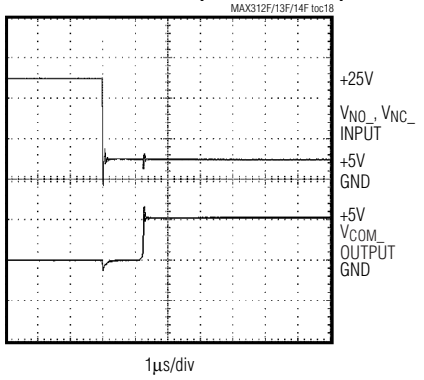

FAULT RECOVERY TIME (NEGATIVE INPUT)

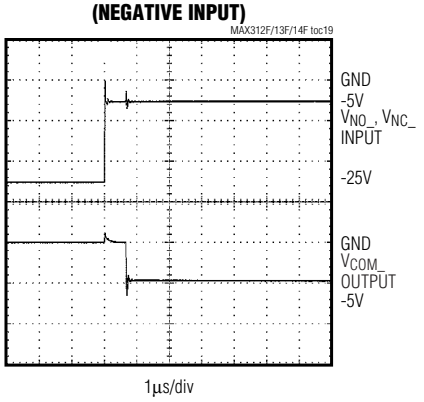

FAULT RESPONSE TIME (POSITIVE INPUT)

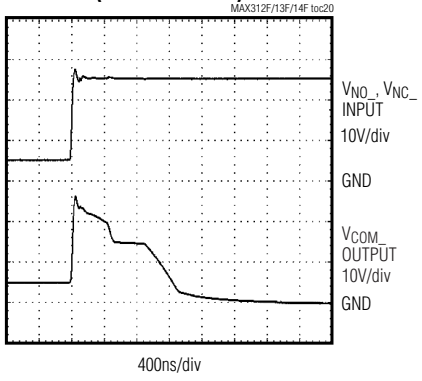

FAULT RESPONSE TIME (NEGATIVE INPUT)

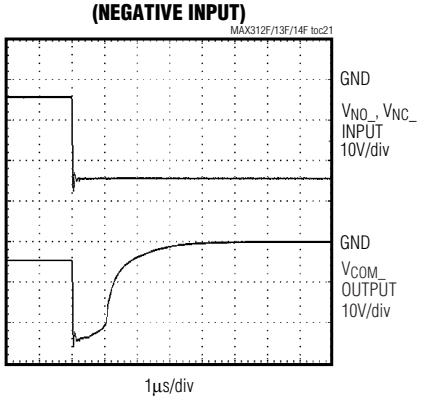

FAULT RESPONSE (V+ = 0V, V- = -15V)

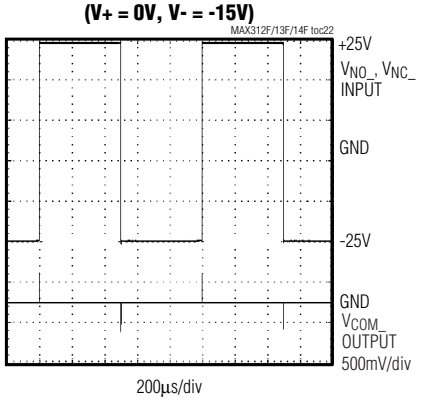

Pin Description

PIN			NAME	FUNCTION
MAX312F	MAX313F	MAX314F		
1, 16, 9, 8	1, 16, 9, 8	1, 16, 9, 8	IN1, IN2, IN3, IN4	Logic-Control Digital Inputs
2, 15, 10, 7	2, 15, 10, 7	2, 15, 10, 7	COM1, COM2, COM3, COM4	Analog Switch Common Terminals
3, 14, 11, 6	—	—	NC1, NC2, NC3, NC4	Analog Switch Normally Closed Terminals
—	3, 14, 11, 6	—	NO1, NO2, NO3, NO4	Analog Switch Normally Open Terminals
—	—	3, 6	NO1, NO4	Analog Switch Normally Open Terminals
—	—	14, 11	NC2, NC3	Analog Switch Normally Closed Terminals
4	4	4	V-	Negative-Supply Voltage Input. Connect to GND for single-supply operation. Bypass with a 0.1µF capacitor to GND.
5	5	5	GND	Ground. Connect to digital ground.
12	12	12	N.C.	No Connection. Not internally connected.
13	13	13	V+	Positive-Supply Voltage Input. Bypass with a 0.1µF capacitor to GND.

Detailed Description

The MAX312F/MAX313F/MAX314F are fault-protected CMOS analog switches with unique operation and construction. These switches differ considerably from traditional fault-protection switches, with several advantages. First, they are constructed with two parallel FETs, allowing very low on-resistance when the switch is on. Second, they allow signals on the NO_ or NC_ pins that are within, or slightly beyond, the supply rails to be passed through the switch to the COM_ terminal (or vice versa), allowing true rail-to-rail signal operation. Third, the MAX312F/MAX313F/MAX314F have the same fault-protection performance on any of the NO_, NC_, or COM_ switch inputs. Operation is identical for both fault polarities. The fault protection extends to ±36V from GND with ±15V supplies.

During a fault condition, the particular overvoltage input (COM_, NO_, NC_) pin becomes high impedance regardless of the switch state or load resistance. When power is removed, the fault protection is still in effect. In this case, the COM_, NO_, or NC_ terminals are a virtual open circuit. The fault can be up to ±40V with power off. The switches turn off when V+ is not powered, regardless of V-.

Pin Compatibility

These switches have identical pinouts to common non-fault-protected CMOS switches. They allow for carefree direct replacement in existing printed circuit boards since the NO_, NC_, and COM_ pins of each switch are fault protected.

Internal Construction

Internal construction is shown in Figure 1, with the analog signal paths shown in bold. A single NO switch is shown. The NC configuration is identical except the logic-level translator becomes an inverter. The analog switch is formed by the parallel combination of N-channel FET (N1) and P-channel FET (P1), which are driven on and off simultaneously according to the input fault condition and the logic-level state.

Normal Operation

Two comparators continuously compare the voltage on the COM_, NO_, and NC_ pins with V+ and V-. When the signal on COM_, NO_, or NC_ is between V+ and V-, the switch acts normally, with FETs N1 and P1 turning on and off in response to IN_ signals. The parallel combination of N1 and P1 forms a low-value resistor between NO_ (or NC_) and COM_ so that signals pass equally well in either direction.

Positive Fault Condition

When the signal on NO_ (or NC_) and COM_ exceeds V+, the high-fault comparator output is high, turning off FETs N1 and P1. This makes the NO_ (or NC_) and COM_ pins high impedance regardless of the switch

Quad, Rail-to-Rail, Fault-Protected, SPST Analog Switches

state. If the switch state is off, all FETs are turned off and both NO_ (or NC_) and COM_ are high impedance.

Negative Fault Condition

When the signal on NO_ (or NC_) and COM_ exceeds V-, the low-fault comparator output is high, turning off FETs N1 and P1. This makes the NO_ (or NC_) and COM_ pins high impedance regardless of the switch state. If the switch state is off, all FETs are turned off and both NO_ (or NC_) and COM_ are high impedance.

Transient Fault Response and Recovery

When a fast rise-time and fall-time transient on NO_, NC_, or COM_ exceeds V+ or V-, the output follows the input to the supply rail with only a few nanoseconds delay. This delay is due to the switch on-resistance and circuit capacitance to ground. When the input transient returns to within the supply rails, however, there is a longer output recovery time delay. For positive faults, the recovery time is typically 1µs. For negative faults, the recovery time is typically 0.6µs. These values depend on the output resistance and capacitance, and are not production tested or guaranteed. The delays are not dependent on the fault amplitude. Higher load resistance and capacitance increase recovery times.

Fault-Protection Voltage and Power Off

The maximum fault voltage on the NO_ (or NC_) and COM_ pins is ±36V with power applied and ±40V with power off.

Failure Modes

Exceeding the fault-protection voltage limits on NO_, NC_, or COM_, even for very short periods, can cause the device to fail (see the *Absolute Maximum Ratings*). The failure modes may not be obvious, and failure in one switch may or may not affect other switches in the same package.

Ground

There is no galvanic connection between the analog signal paths and GND. The analog signal paths consist of an N-channel and P-channel MOSFET with their sources and drains paralleled and their gates driven out of phase to V+ and V- by the logic-level translators. However, the potential of the analog signals must be defined or at least limited with respect to GND.

V+ and GND power the internal logic and logic-level translators and set the input logic thresholds. The logic-level translators convert the logic levels to switched V+ and V- signals to drive the gates of the analog switches. This drive signal is the only connection between the power supplies and the analog signals.

Bipolar Supplies

The MAX312F/MAX313F/MAX314F operate with bipolar supplies between ±4.5V and ±20V. The V+ and V- supplies need not be symmetrical, but their difference cannot exceed the absolute maximum rating of 44V.

Single Supply

The MAX312F/MAX313F/MAX314F operate from a single supply between +9V and +36V when V- is connected to GND.

Ordering Information (continued)

PART	TEMP RANGE	PIN-PACKAGE
MAX313FESE	-40°C to +85°C	16 SO
MAX313FEPE	-40°C to +85°C	16 Plastic DIP
MAX314FESE	-40°C to +85°C	16 SO
MAX314FEPE	-40°C to +85°C	16 Plastic DIP

Chip Information

TRANSISTOR COUNT: 251

PROCESS: CMOS

SUBSTRATE CONNECTED TO: V+

Test Circuits/Timing Diagrams

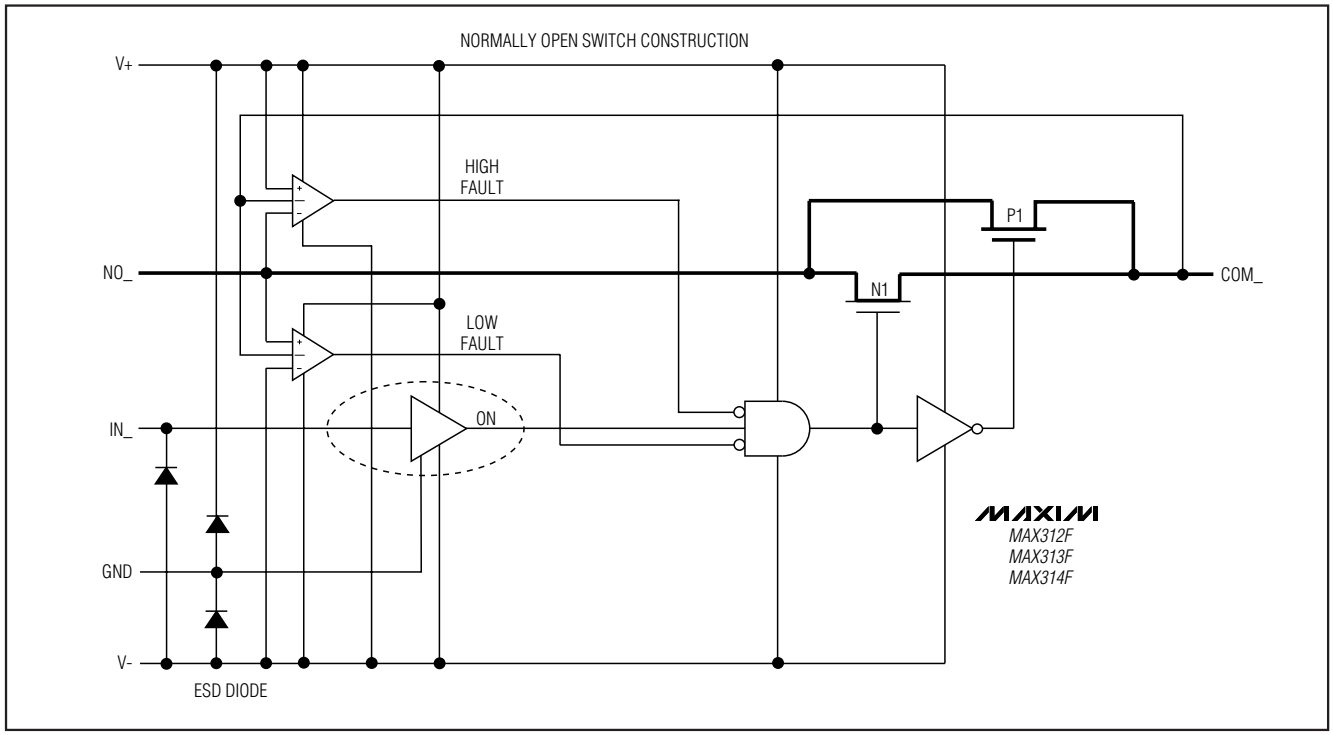

Figure 1. Functional Diagram

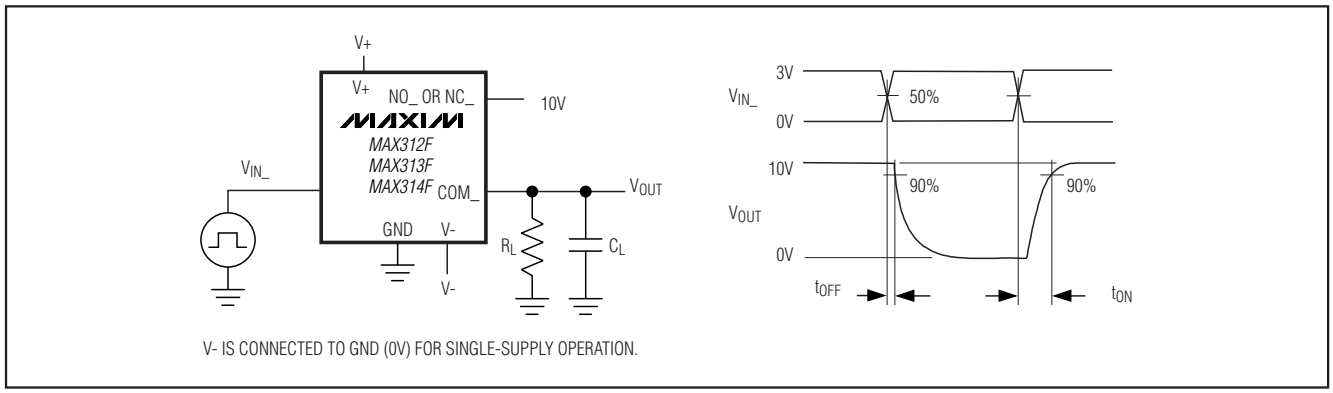

Figure 2. Switch Turn-On/Turn-Off Times

Quad, Rail-to-Rail, Fault-Protected, SPST Analog Switches

Test Circuits/Timing Diagrams (continued)

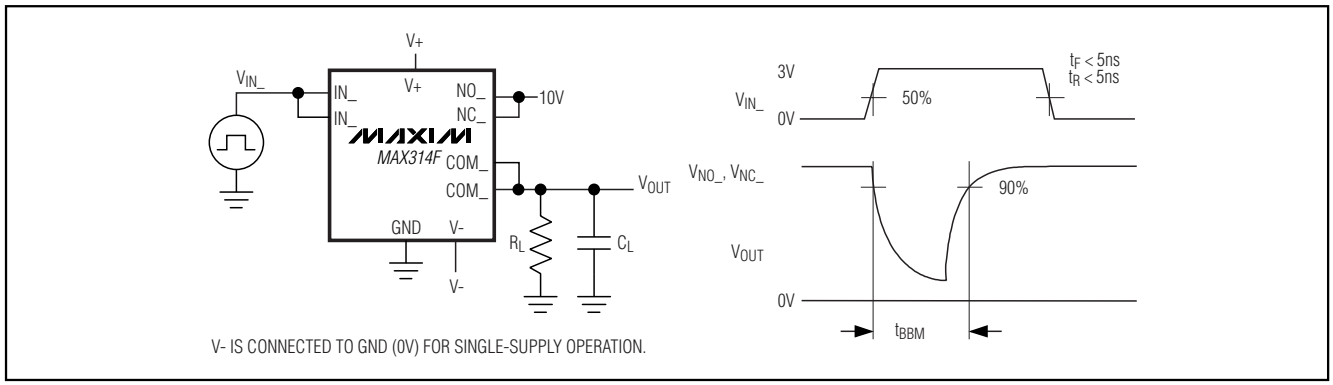

Figure 3. MAX314F Break-Before-Make Interval

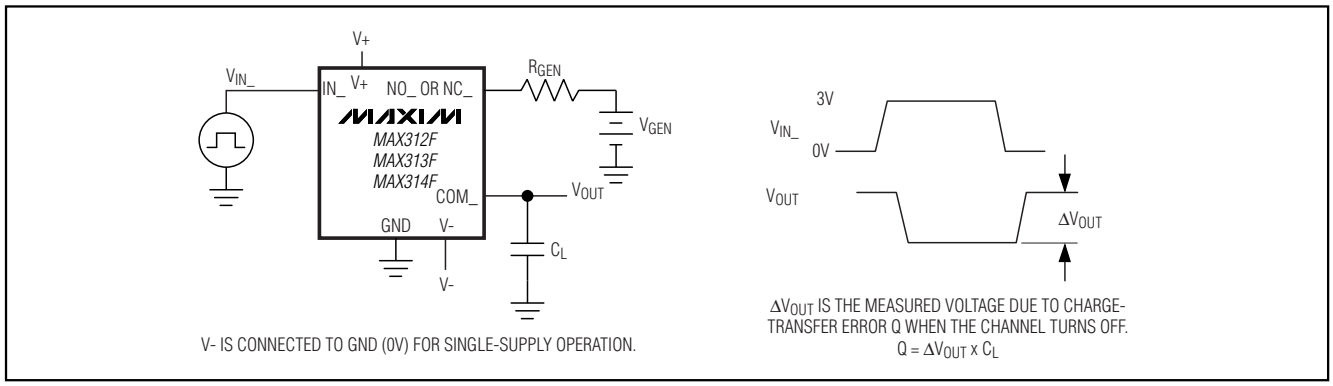

Figure 4. Charge Injection

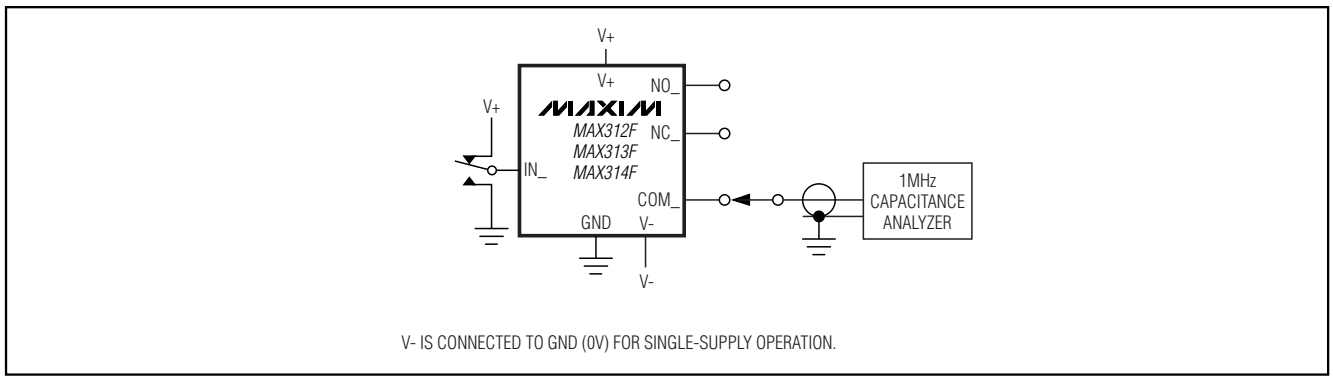

Figure 5. COM_, NO_, NC_ Capacitance

Test Circuits/Timing Diagrams (continued)

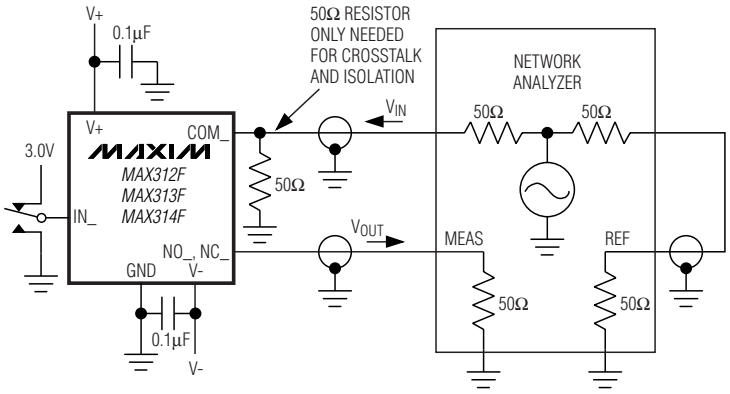

MEASUREMENTS ARE STANDARDIZED AGAINST SHORT AND OPEN AT SOCKET TERMINALS.
OFF-ISOLATION IS MEASURED BETWEEN COM_ AND OFF NO_ OR NC_ TERMINALS.
ON-RESPONSE IS MEASURED BETWEEN COM_ AND ON NO_ OR NC_ TERMINALS.
CROSSTALK IS MEASURED BETWEEN COM_ TERMINALS WITH ALL SWITCHES ON.
V- IS CONNECTED TO GND (0V) FOR SINGLE-SUPPLY OPERATION.

Figure 6. Frequency Response, Off-Isolation, and Crosstalk

Pin Configurations (continued)

TOP VIEW

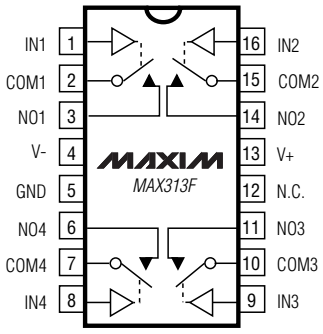

DIP/SO

MAX313F	
LOGIC	**SWITCH**
0	OFF
1	ON

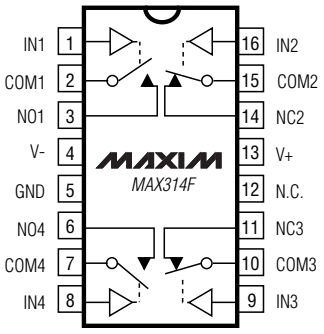

DIP/SO

MAX314F		
LOGIC	**SWITCHES 1, 4**	**SWITCHES 2, 3**
0	OFF	ON
1	ON	OFF

N.C. = NOT CONNECTED. SWITCHES SHOWN FOR LOGIC 0 INPUT.
ALL SWITCHES ARE OFF WITH POWER REMOVED.

Quad, Rail-to-Rail, Fault-Protected, SPST Analog Switches

Package Information

(The package drawing(s) in this data sheet may not reflect the most current specifications. For the latest package outline information, go to **www.maxim-ic.com/packages**.)

PDIPN.EPS

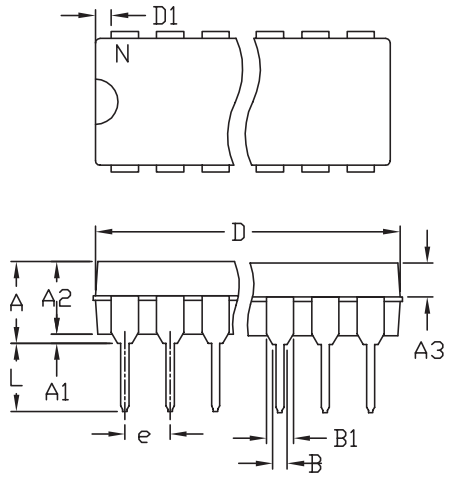

	INCHES		MILLIMETERS	
	MIN	MAX	MIN	MAX
A	---	0.180	---	4.572
A1	0.015	---	0.38	---
A2	0.125	0.175	3.18	4.45
A3	0.055	0.080	1.40	2.03
B	0.015	0.022	0.381	0.56
B1	0.045	0.065	1.14	1.65
C	0.008	0.014	0.2	0.355
D1	0.005	0.080	0.13	2.03
E	0.300	0.325	7.62	8.26
E1	0.240	0.310	6.10	7.87
e	0.100 BSC.		2.54 BSC.	
eA	0.300 BSC.		7.62 BSC.	
eB	0.400 BSC.		10.16 BSC.	
L	0.115	0.150	2.921	3.81

	INCHES		MILLIMETERS			
	MIN	MAX	MIN	MAX	N	MS001
D	0.348	0.390	8.84	9.91	8	AB
D	0.735	0.765	18.67	19.43	14	AC
D	0.745	0.765	18.92	19.43	16	AA
D	0.885	0.915	22.48	23.24	18	AD
D	1.015	1.045	25.78	26.54	20	AE
D	1.14	1.265	28.96	32.13	24	AF
D	1.360	1.380	34.54	35.05	28	*5

NOTES:
1. D&E DO NOT INCLUDE MOLD FLASH
2. MOLD FLASH OR PROTRUSIONS NOT TO EXCEED .15mm (.006")
3. CONTROLLING DIMENSION: MILLIMETER
4. MEETS JEDEC MS001-XX AS SHOWN IN ABOVE TABLE
5. SIMILIAR TO JEDEC MO-058AB
6. N = NUMBER OF PINS

MAXIM 120 SAN GABRIEL DR SUNNYVALE CA 94086 FAX (408) 737 7194
PROPRIETARY INFORMATION

PACKAGE FAMILY OUTLINE: PDIP .300"
TITLE

1/1

21-0043 D
DOCUMENT CONTROL NUMBER REV

Package Information (continued)

(The package drawing(s) in this data sheet may not reflect the most current specifications. For the latest package outline information, go to **www.maxim-ic.com/packages**.)

16L SOIC.EPS

	INCHES		MILLIMETERS	
DIM	MIN	MAX	MIN	MAX
A	0.053	0.069	1.35	1.75
A1	0.004	0.010	0.10	0.25
B	0.014	0.019	0.35	0.49
C	0.007	0.010	0.19	0.25
D	0.386	0.394	9.80	10.00
e	0.050	BSC	1.27	BSC
E	0.150	0.157	3.80	4.00
H	0.228	0.244	5.80	6.20
h	0.010	0.020	0.25	0.50
L	0.016	0.050	0.40	1.27
α	0?	8?	0?	8?

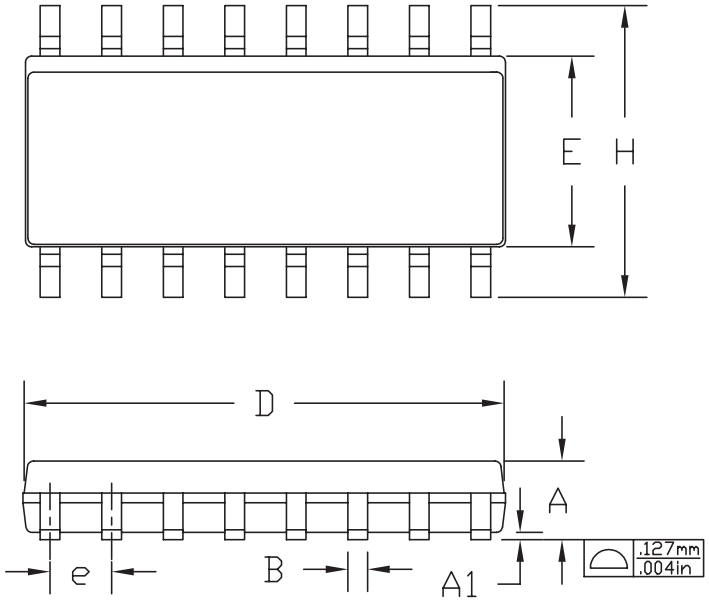

NOTES:
1. D&E DO NOT INCLUDE MOLD FLASH.
2. MOLD FLASH OR PROTRUSIONS NOT TO EXCEED .15mm (.006")
3. CONTROLLING DIMENSION: MILLIMETER
4. MEETS JEDEC MS-012 AC.

MAXIM
PROPRIETARY INFORMATION
TITLE: 16L (N) SOIC OUTLINE
APPROVAL | DWG: 21-0588 | REV: B | 1/1

Maxim cannot assume responsibility for use of any circuitry other than circuitry entirely embodied in a Maxim product. No circuit patent licenses are implied. Maxim reserves the right to change the circuitry and specifications without notice at any time.

© 2003 Maxim Integrated Products Printed USA MAXIM is a registered trademark of Maxim Integrated Products.