MAX2181A

FM Automotive Low-Noise Amplifier

General Description

The MAX2181A is a highly integrated FM variable-gain low-noise amplifier ideal for use in automotive FM and FM-diversity active antenna applications. The device features an FM signal path, providing 30dB of gain range, controlled by an on-chip power detector. The FM signal path covers 76MHz to 162.5MHz.

The device is available in a small, 3mm x 3mm, TQFN package and operates over the extended industrial temperature range (-40ºC to +85ºC).

Applications

- Automotive Active Antenna
- Automotive Head Unit

***Ordering Information* appears at end of data sheet.**

For related parts and recommended products to use with this part, refer to www.maximintegrated.com/MAX2181A.related.

Features

- +5V Supply Voltage
- Integrated AGC Function Eliminates External Pin Diodes
- High Dynamic Range
- Low-Noise, Sub 3dB Noise Figure
- Low External BOM
- Small Package (3mm x 3mm TQFN)
- Integrated Power Detector

Simplified Block Diagram

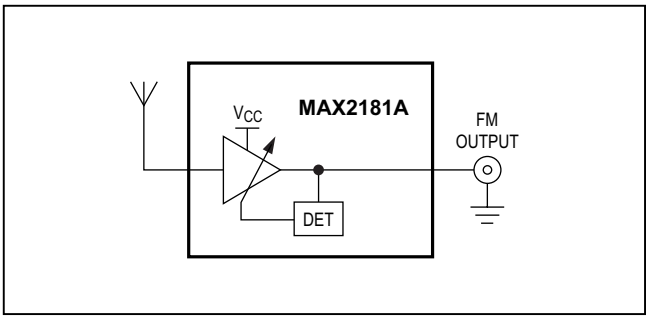

19-6612; Rev 0; 2/13

maxim integrated™

Absolute Maximum Ratings

$V_{DD,}$ FMBYPASS, FMOUT.....-0.5V to +6V
Short-Circuit Protection FMOUT ..... Indefinite
FMIN..... 130dBµV
Continuous Power Dissipation (T_A = +70ºC)
16 TQFN (derate 20.8mW/ºC above +70ºC) 1666.7mW
θ_{JC} (Junction to Case) (Note 1).....7ºC/W
θ_{JA} (Junction to Ambient) (Note 1).....48ºC/W

Operating Temperature Range.....-40ºC to +105ºC
Junction Temperature.....+150ºC
Storage Temperature Range.....-65ºC to +165ºC
Lead Temperature (TQFN only, soldering, 10s).....+300ºC
Soldering Temperature (reflow).....+260ºC

Note 1: Package thermal resistances were obtained using the method described in JEDEC specification JESD51-7, using a four-layer board. For detailed information on package thermal considerations, refer to **www.maximintegrated.com/thermal-tutorial**.

CAUTION! ESD SENSITIVE DEVICE

Stresses beyond those listed under "Absolute Maximum Ratings" may cause permanent damage to the device. These are stress ratings only, and functional operation of the device at these or any other conditions beyond those indicated in the operational sections of the specifications is not implied. Exposure to absolute maximum rating conditions for extended periods may affect device reliability.

DC Electrical Characteristics

(MAX2181A *Typical Application Circuit* as shown, V_{DD} = 4.75V to 5.25V, T_A = -40ºC to +85ºC, unless otherwise noted. Typical values are at V_{DD} = 5V, T_A = +25ºC.) (Note 2)

PARAMETER	CONDITIONS	MIN	TYP	MAX	UNITS
SUPPLY VOLTAGE (V_{DD})					
V_{DD}	Operational range	4.75	5	5.25	V
Supply Current			56	68	mA
GAIN CONTROL AND AGC CONTROL (FMDET, FMGAIN, FMAGC)					
FMDET	Ground	-65			µA
	VDD			50	
FMGAIN	Ground	-50			µA
	Open		2.5		V
	VDD			50	µA
FMAGC	Ground	-50			µA
	VDD			50	

AC Electrical Characteristics

(MAX2181A *Typical Application Circuit*, V_{DD} = 4.75V to 5.25V, T_A = -40°C to +85°C, unless otherwise noted. Typical values are at V_{DD} = 5V, load impedance = 50Ω, FM gain connected to ground, tuned for 87MHz to 108MHz, T_A = +25°C.) (Note 2)

PARAMETER	CONDITIONS	MIN	TYP	MAX	UNITS
Frequency Range		76		162.5	MHz
Power Gain Maximum	f_{IN} = 97MHz, FMGAIN connected to V_{DD}	6	8.3	10	dB
	f_{IN} = 97MHz, FMGAIN = open	5	7.2	9	
	f_{IN} = 97MHz, FMGAIN = connected to ground	4	6	8	
Gain Flatness	76MHz to 90MHz (Notes 3, 4)			0.5	dB
	87MHz to 108MHz (Note 3)			0.5	
	162.5MHz relative to 97MHz			3.2	
Noise Figure	f_{IN} = 97MHz, T_A = +25ºC		2.5		dB
Input Return Loss	50Ω source		10		dB
Output Return Loss	50Ω load		15		dB
Gain-Control Range	f_{IN} = 97MHz	28	32		dB
IMD3	V_{IN} = +120dBµV/tone, +100dBµV AGC threshold, 99.5MHz and 100.5MHz tones		66		dBc
AGC Threshold (See Table 2)	Minimum output threshold		92		dBµV
	Maximum output threshold		107		
AGC Threshold Variation	Relative to 97MHz tone (76MHz to 108MHz)		±0.3		dB

Note 2: Min and max values are production tested at T_A = -40ºC, +25ºC, and +85ºC.
Note 3: Guaranteed by design and characterization.
Note 4: Tuned for 76MHz to 90MHz

Typical Operating Characteristics

(MAX2181A *Typical Application Circuit*, V_{DD} = 5V, tuned for 87MHz - 108MHz, FM gain connected to ground, T_A = +25°C, unless otherwise noted.)

SUPPLY CURRENT vs. TEMPERATURE

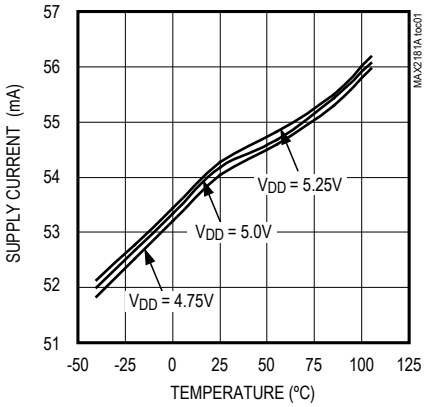

GAIN vs. FREQUENCY 87MHz TO 108MHz TUNING

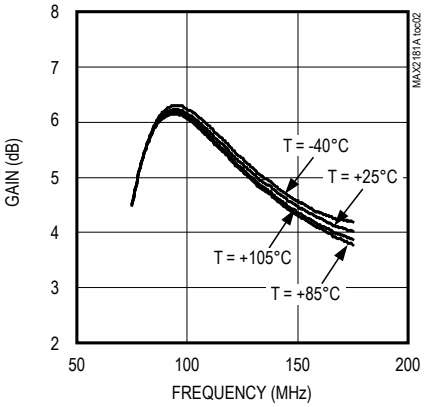

GAIN vs. FREQUENCY 87MHz TO 108MHz TUNING

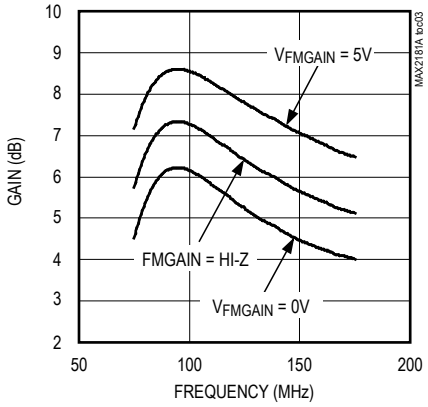

NOISE FIGURE vs. FREQUENCY 87MHz TO 108MHz TUNING

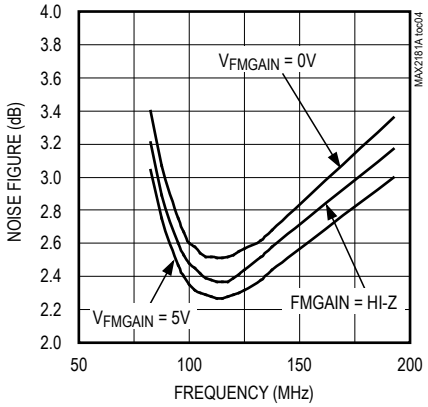

GAIN vs. FREQUENCY 76MHz TO 90MHz TUNING

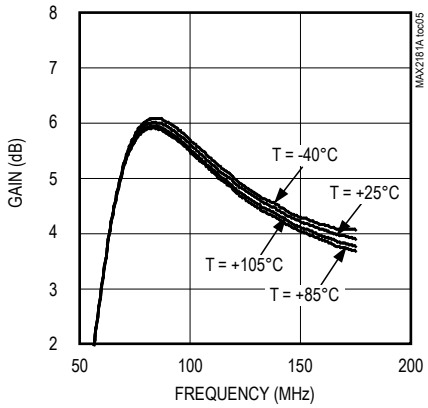

GAIN vs. FREQUENCY 76MHz TO 90MHz TUNING

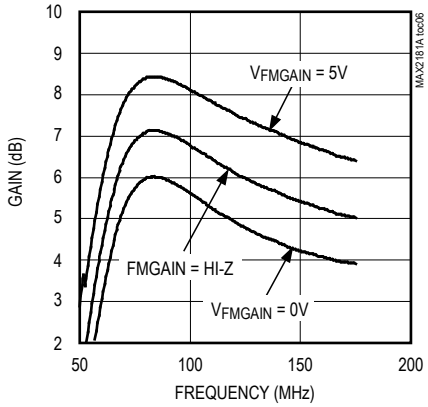

NOISE FIGURE vs. FREQUENCY 76MHz TO 90MHz TUNING

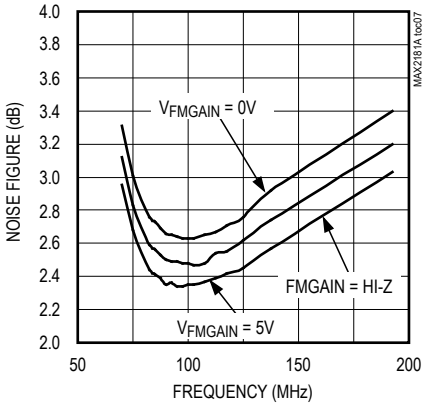

AGC ATTACK POINT vs. FREQUENCY 87MHz TO 108MHz TUNING

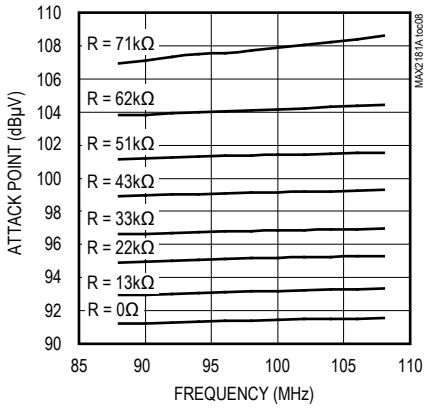

OUTPUT POWER, IM2, AND IM3 vs. INPUT POWER CLOSED LOOP

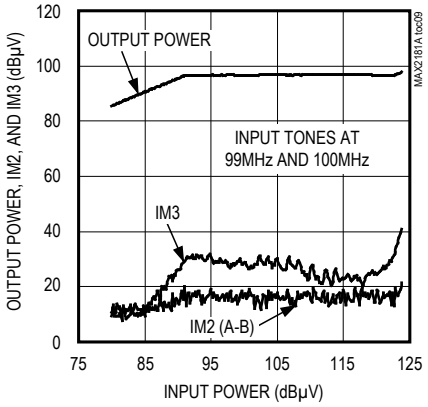

Pin Configuration

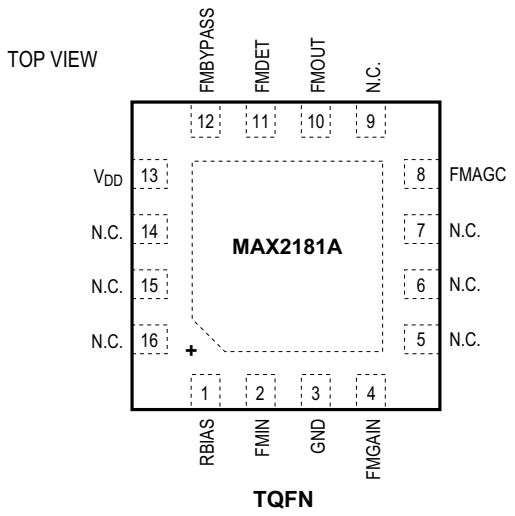

Pin Description

PIN	NAME	FUNCTION
1	RBIAS	Connect a 1% tolerance 20kΩ resistor to ground.
2	FMIN	FM Input. AC couple to FM input bandpass filter.
3	GND	Ground
4	FMGAIN	FM Gain Trim. Connect to ground, leave open, or connect to V_{DD} for the desired FM gain.
5–7, 9, 14–16	N.C.	No Connection to Die. Suggested thermal path on Layer 1 of PCB for packages exposed pad to thermal sink.
8	FMAGC	FM AGC Control Line. Connect a 1µF capacitor to ground.
10	FMOUT	FM VGA Output
11	FMDET	FM Attack Point Trim. Connect the desired resistor to ground.
12	FMBYPASS	Connect a 10µF and 1000pF capacitor to ground.
13	V_{DD}	Supply Voltage
—	EP	Exposed Pad. Ground.

Detailed Description

Setting Signal Path Gain and AGC Attack Point

The MAX2181A allows independent variation of the gain and AGC attack points on the FM signal path. Gain and attack point are adjusted by changing the conditions on the FMGAIN and FMDET pins.

FM Signal Path

Typical FM gain can be set using the FMGAIN pin as shown in Table 1. The output attack point of the FM signal path is adjusted by changing the resistor R_{FMDET}, connected to the FMDET pin. Table 2 shows the attack point associated with several resistor values.

Layout Recommendations

For best performance, the device must be mounted on a PCB that is designed for a low thermal resistance. The backside ground of the MAX2181A should be connected to a thermal ground plane on the PCB using at least nine plated through holes.

Refer to **www.maximintegrated.com** for the MAX2181A Evaluation Kit schematic, Gerber data, PADS layout file, and BOM information.

Table 1. FM Signal Path Gain

PIN FMGAIN	FM GAIN (dB, TYP)
Ground	6.0
Open	7.2
V_{DD}	8.3

Table 2. FM Signal Path Attack Point

R_{FMDET} (kΩ)	FM OUTPUT ATTACK POINT (dBµV, TYP)
0	92
13	93.5
22	95
33	97
43	99
51	101.5
62	104
71	107

Typical Application Circuit

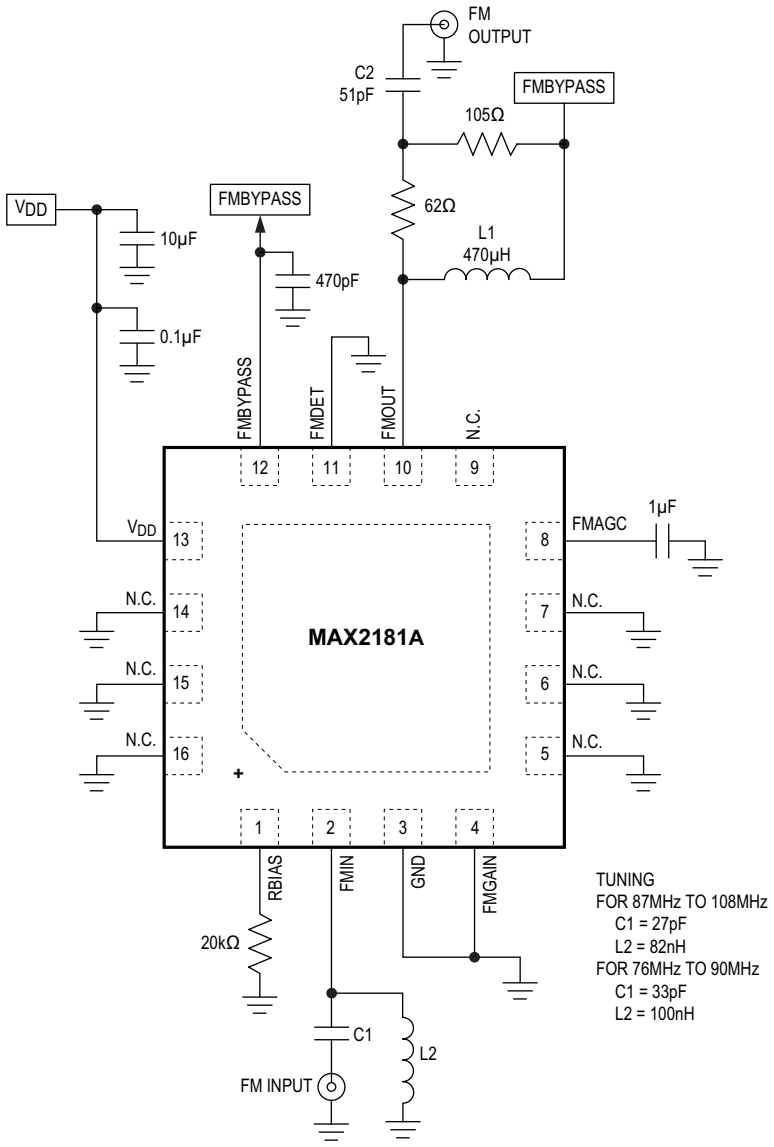

Ordering Information

PART	TEMP RANGE	PIN-PACKAGE
MAX2181AETE+	-40°C to +85°C	16 TQFN-EP*
MAX2181AETE/V+	-40°C to +85°C	16 TQFN-EP*

+Denotes a lead(Pb)-free/RoHS-compliant package.
**EP = Exposed pad.*
/V denotes an automotive qualified part.

Package Information

For the latest package outline information and land patterns (footprints), go to **www.maximintegrated.com/packages**. Note that a "+", "#", or "-" in the package code indicates RoHS status only. Package drawings may show a different suffix character, but the drawing pertains to the package regardless of RoHS status.

PACKAGE TYPE	PACKAGE CODE	OUTLINE NO.	LAND PATTERN NO.
16 TQFN	T1633+2	**21-0136**	**90-0030**

Revision History

REVISION NUMBER	REVISION DATE	DESCRIPTION	PAGES CHANGED
0	2/13	Initial release	—

For pricing, delivery, and ordering information, please contact Maxim Direct at 1-888-629-4642, or visit Maxim Integrated's website at www.maximintegrated.com.

Maxim Integrated cannot assume responsibility for use of any circuitry other than circuitry entirely embodied in a Maxim Integrated product. No circuit patent licenses are implied. Maxim Integrated reserves the right to change the circuitry and specifications without notice at any time. The parametric values (min and max limits) shown in the Electrical Characteristics table are guaranteed. Other parametric values quoted in this data sheet are provided for guidance.

Maxim Integrated and the Maxim Integrated logo are trademarks of Maxim Integrated Products, Inc. © 2013 Maxim Integrated Products, Inc.