MAX16948

Automotive Dual Remote Antenna Current-Sense LDO/Switch

General Description

The MAX16948 is a dual high-voltage, current-sensing low dropout linear regulator (LDO)/switch designed to operate with an input voltage range from 4.5V to 28V (45V load dump tolerant). The device provides phantom power over coax cable to remote radio frequency low-noise amplifiers (LNAs) in automotive systems with a maximum current of 300mA per channel. The device also provides a fixed regulated output voltage of 8.5V or an adjustable 1V to 12.5V output voltage. The device can also be configured as a switch.

The device monitors the load current and provides an analog output current proportional to the sensed load current. Accurate internal current limits protect the input supply against both overcurrent and short-circuit conditions. The device features an open-drain error output for each channel to indicate to the microcontroller (µC) when a fault has occurred.

The device features short-to-battery protection to latch off the internal LDO/switch during a short-to-battery event. During a thermal overload, the device reduces power dissipation by going into thermal shutdown. It includes two independent active-low, high-voltage-compatible shutdown inputs to place each channel in a low-power shutdown mode.

The device is available in a 16-pin TQFN package with exposed pad, a 16-pin QSOP package with exposed pad, or a 16-pin QSOP package and is fully specified over the -40°C to +105°C temperature range.

Features

- **2-Channel LDO/Switch with Precision-Adjustable Current-Sense (Up to 300mA Per Channel)**
- **Wide Input Voltage Range: 4.5V to 28V (45V Load Dump Tolerant)**
- **On/Off Switching or Regulation of Phantom Power Under µC Control**
- **Reverse Current Protection**
- **Output Short-to-Battery Protection**
- **Load Current Monitoring to Detect Open-Load/Normal/Short-Circuit Conditions**
- **Open-Drain Error Status Signaling to µC**
- **Input Overvoltage Shutdown**
- **High Power-Supply Rejection Ratio (73dB)**

Applications

Remote LNA Phantom Power

Automotive Camera and Sensor Power

***Ordering Information* appears at end of data sheet.**

For related parts and recommended products to use with this part, refer to **www.maximintegrated.com/MAX16948.related.**

Typical Operating Circuits

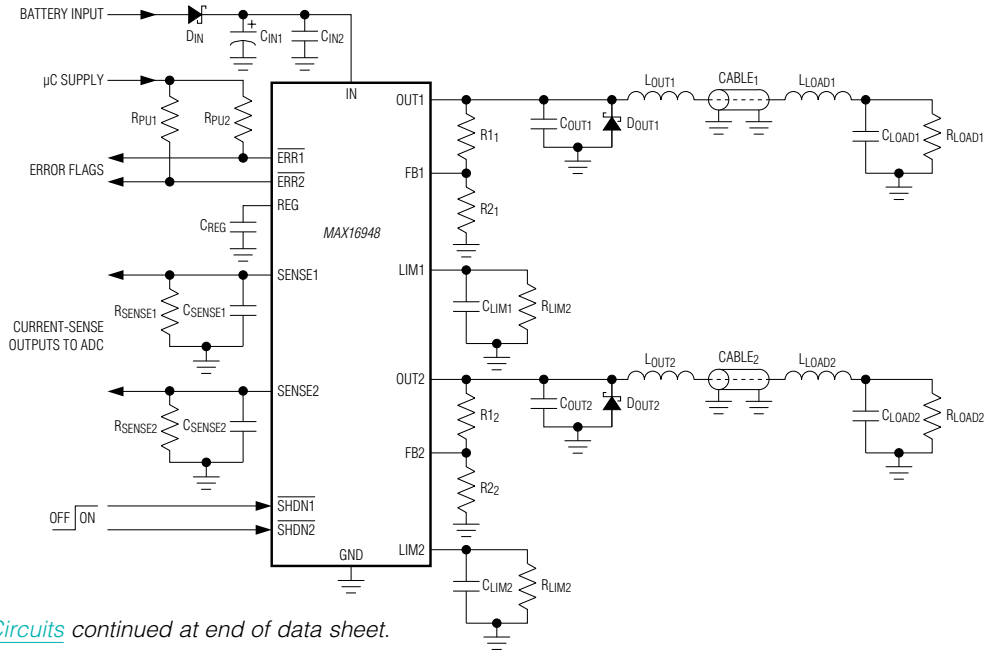

Typical Operating Circuits continued at end of data sheet.

For pricing, delivery, and ordering information, please contact Maxim Direct at 1-888-629-4642, or visit Maxim Integrated's website at www.maximintegrated.com.

19-6054; Rev 2; 5/13

ABSOLUTE MAXIMUM RATINGS

(All voltages referenced to GND.)
IN, $\overline{SHDN1}$, $\overline{SHDN2}$ ..... -0.3V to +45V
$\overline{ERR1}$, $\overline{ERR2}$, REG ..... -0.3V to +6.0V
FB1, FB2, SENSE1, SENSE2, LIM1, LIM2 .. -0.3V to (V_{REG} + 0.3V)
OUT1, OUT2 ..... -0.3V to +20V
Continuous Power Dissipation (T_A = +70°C)
TQFN-EP (derate 25.0mW/°C above +70°C) 2000mW
QSOP-EP (derate 22.7mW/°C above +70°C) 1818mW
QSOP (derate 9.5mW/°C above +70°C) 762mW
Operating Temperature Range ..... -40°C to +105°C
Storage Temperature Range ..... -65°C to +150°C
Junction Temperature ..... +150°C
Lead Temperature (soldering, 10s) ..... +300°C
Soldering Temperature (reflow) ..... +260°C

PACKAGE THERMAL CHARACTERISTICS (Note 1)

TQFN-EP
Junction-to-Ambient Thermal Resistance (θ_{JA}) ..... 40°C/W
Junction-to-Case Thermal Resistance (θ_{JC}) ..... 6°C/W
16 QSOP-EP
Junction-to-Ambient Thermal Resistance (θ_{JA}) ..... 44°C/W
Junction-to-Case Thermal Resistance (θ_{JC}) ..... 6°C/W
16 QSOP
Junction-to-Ambient Thermal Resistance (θ_{JA}) ..... 105°C/W
Junction-to-Case Thermal Resistance (θ_{JC}) ..... 37°C/W

Note 1: Package thermal resistances were obtained using the method described in JEDEC specification JESD51-7, using a four-layer board. For detailed information on package thermal considerations, refer to **www.maximintegrated.com/thermal-tutorial**.

Stresses beyond those listed under "Absolute Maximum Ratings" may cause permanent damage to the device. These are stress ratings only, and functional operation of the device at these or any other conditions beyond those indicated in the operational sections of the specifications is not implied. Exposure to absolute maximum rating conditions for extended periods may affect device reliability.

ELECTRICAL CHARACTERISTICS

(V_{IN} = 14V, T_A = T_J = -40°C to +105°C, unless otherwise noted. Typical values are at T_A = T_J = +25°C.) (Note 2)

PARAMETER	SYMBOL	CONDITIONS	MIN	TYP	MAX	UNITS
POWER SWITCH/LDO						
IN Operating Supply Range	V_{IN}	Over 19V, output and current sense is switched off (Note 3)	4.5		28	V
		Output switched off, for < 1s (Note 3)			45	
IN Supply Current in Operation	I_{IN}	$V_{\overline{SHDN1}/\overline{SHDN2}}$ > 2.8V, T_A = +25°C		2.1	3.4	mA
IN Supply Current in Shutdown	I_{SD}	$\overline{SHDN1}$ = $\overline{SHDN2}$ = GND, T_A = +25°C, V_{IN} = 12V			7	µA
IN Undervoltage Lockout	V_{UVL}	V_{IN} rising			4.8	V
		V_{IN} falling		3.8	4.45	
IN Undervoltage Lockout Hysteresis	$V_{UVL-HYS}$			390		mV
Voltage Drop of Internal Switch	V_{IN} - $V_{OUT1/OUT2}$	Measured between IN and OUT1/OUT2, $I_{OUT1/OUT2}$ = 100mA, FB1/FB2 = GND, SW operation $V_{IN} \geq$ 5V, T_A = +105°C (Note 4)			0.3V	V
		Measured between IN and OUT1/OUT2, $I_{OUT1/OUT2}$ = 100mA, FB1/FB2 = GND, SW operation $V_{IN} \geq$ 5V, T_A = +25°C		0.145	0.220	

ELECTRICAL CHARACTERISTICS (continued)

(V_{IN} = 14V, T_A = T_J = -40°C to +105°C, unless otherwise noted. Typical values are at T_A = T_J = +25°C.) (Note 2)

PARAMETER	SYMBOL	CONDITIONS		MIN	TYP	MAX	UNITS
Feedback Voltage	V_{FB}	For LDO mode with external resistive dividers, $I_{OUT1/OUT2_}$ = 5mA to 150mA		0.97	1	1.03	V
Input Bias Current to FB1 and FB2	$I_{FB1/FB2}$	$V_{FB1/FB2}$ = 1.0V, LDO mode, T_A = +25°C		-0.5		+0.5	µA
Feedback Threshold for Internal Feedback Resistive Divider	$V_{FB1/FB2,TH}$	Switching to LDO mode with internal 8.5V resistive dividers		V_{REG} - 1.7		V_{REG} - 0.8	V
Adjustable Output Voltage Range	$V_{OUT1/OUT2}$	LDO mode with external resistive dividers (Notes 3, 5)		1		12.5	V
FB1 and FB2 Load Regulation	$\Delta V_{FB, LOAD}$	V_{IN} - $V_{OUT1/OUT2} \geq$ 2V, $I_{OUT1/OUT2}$ = 5mA to 250mA, LDO mode (Note 3)			-7		mV
FB1 and FB2 Line Regulation	$\Delta V_{FB, LINE}$	V_{IN} - $V_{OUT1/OUT2} \geq$ 2V, $I_{OUT1/OUT2}$ = 50mA, LDO mode (Note 3)			100		µV/V
Fixed Output Voltage 8.5V	$V_{OUT1/OUT2, 8.5V}$	$I_{OUT1/OUT2}$ = 70mA, LDO mode with internal resistive divider, 9V < V_{IN} < 18V		8.33	8.5	8.67	V
Power-Supply Rejection Ratio	PSRR	V_{IN} - $V_{OUT1/OUT2} \geq$ 2V, $I_{OUT1/OUT2}$ = 10mA at f = 100Hz, LDO mode $V_{OUT1/OUT2}$ = 8.5V, V_{RIPPLE} = 0.5V_{P-P} (Note 3)			73		dB
CURRENT SENSE							
SENSE1 to OUT1 and SENSE2 to OUT2 Current Ratio	A_I	$V_{SENSE1/SENSE2}$ < 3V	$I_{OUT1/OUT2}$ = 100mA, V_{IN} = 5V, 19V	0.485	0.5	0.515	%
			50mA ≤ $I_{OUT1/OUT2}$ ≤ 300mA, $V_{IN} \geq$ 5V (Note 3)	0.45	0.5	0.55	
			20mA ≤ $I_{OUT1/OUT2}$ ≤ 50mA, $V_{IN} \geq$ 5V (Note 3)	0.415	0.5	0.585	
			5mA ≤ $I_{OUT1/OUT2}$ ≤ 20mA, $V_{IN} \geq$ 5V (Note 3)	0.325	0.5	0.675	
			0mA ≤ $I_{OUT1/OUT2}$ ≤ 5mA, $V_{IN} \geq$ 5V (Notes 3, 6)	0.3	0.5	0.7	
No-Load Current-Sense Offset	I_{CSO}	I_{OUT1} = I_{OUT2} = 0mA (Note 3)			2	10	µA
SENSE1, SENSE2, LIM1, LIM2 Leakage Current	I_{LEAK}	$\overline{SHDN1}$ = $\overline{SHDN2}$ = GND, T_A =+ 25°C				2	µA

ELECTRICAL CHARACTERISTICS (continued)

(V_{IN} = 14V, T_A = T_J = -40°C to +105°C, unless otherwise noted. Typical values are at T_A = T_J = +25°C.) (Note 2)

PARAMETER	SYMBOL	CONDITIONS	MIN	TYP	MAX	UNITS
FAILURE DETECTION						
LIM1 and LIM2 Current-Limit Threshold Voltage	$V_{LIM1/LIM2,TH}$	Voltage on LIM1 and LIM2 for which output current is limited	2.375	2.5	2.625	V
IN Overvoltage Lockout Threshold (Rising)	$V_{OVLO,R}$	V_{IN} rising	19	21	23	V
IN Overvoltage Lockout Threshold (Falling)	$V_{OVLO,F}$	V_{IN} falling	18.5			V
IN Overvoltage Lockout Hysteresis	$V_{OVLO,H}$			600		mV
Short-to-BAT Threshold in Off State	V_{S2B}	$V_{OUT1/OUT2}$ - V_{IN}, checked during turn-on sequence	-500	-80	+110	mV
Reverse Current Detection Level	I_{REVCUR}	Power FET on (SW or LDO mode)	-100	-50	-1	mA
Reverse Current (Short-to-BAT) Shutdown Delay	t_{PD-RC}	Delay to shutdown the switch or LDO after drop over R_{ON} becomes negative, $I_{OUT1/OUT2}$ = -200mA (typ), T_A = +25°C		4.16	20	µs
Reverse Current Blanking Time	t_{BLK-RC}	Blanking time for reverse current and FB1/FB2 out of range after rising edge of $\overline{SHDN1}$, $\overline{SHDN2}$, or current limiting event is over		16		ms
Feedback Voltage Out of Range	V_{FBERR}	LDO mode, internal pulldown resistor switched on, FB rising	1.12	1.15	1.28	V
Feedback Voltage Out-of-Range Hysteresis	$V_{FBERR-HYS}$	LDO mode, internal pulldown resistor switched on (Note 3)		39	100	mV
OVERTEMPERATURE PROTECTION (Note 3)						
Thermal Shutdown	T_{SHDN}			160		°C
Thermal Shutdown Hysteresis	$T_{SHDN-HYS}$			15		°C
SUPPORTING CIRCUITS, INTERFACE SIGNALS						
Internal Voltage Regulator	V_{REG}	T_A = +25°C, I_{REG} = 0mA, V_{IN} = 4.5V to 18V	4	5	5.5	V
		T_A = +25°C, I_{REG} = 0mA, V_{IN} = 6.5V to 18V	4.5	5	5.5	V
Internal Voltage Regulator Current Limit	I_{REG}	(Note 4)	15			mA
$\overline{ERR1}$ and $\overline{ERR2}$ Output-Voltage Low	V_{OL}	Sinking current = 10mA			0.4	V
$\overline{ERR1}$ and $\overline{ERR2}$ Open-Drain Leakage Current		$\overline{ERR1}$ and $\overline{ERR2}$ not asserted, $V_{\overline{ERR1}/\overline{ERR2}}$ = 5V, T_A = +25°C			1	µA
$\overline{SHDN1}$ and $\overline{SHDN2}$ High	$V_{\overline{SHDN1}/\overline{SHDN2},HI}$		2.8			V
$\overline{SHDN1}$ and $\overline{SHDN2}$ Low	$V_{\overline{SHDN1}/\overline{SHDN2},LO}$				0.8	V

ELECTRICAL CHARACTERISTICS (continued)

(V_{IN} = 14V, T_A = T_J = -40°C to +105°C, unless otherwise noted. Typical values are at T_A = T_J = +25°C.) (Note 2)

PARAMETER	SYMBOL	CONDITIONS	MIN	TYP	MAX	UNITS
$\overline{SHDN1}$ and $\overline{SHDN2}$ Pulldown Resistance	R_{SHDN}	$V_{\overline{SHDN1}/\overline{SHDN2}}$ = 2V		500		kΩ
Startup Response Time	t_{ST}	$\overline{SHDN1}$ and $\overline{SHDN2}$ rising to turn on LDO/switch (Note 3)		300		µs
OUT Pulldown Resistor	$R_{OUT1/OUT2-OFF}$	$\overline{SHDN1}$ = $\overline{SHDN2}$ = GND		56		kΩ

Note 2: Devices are tested at T_A = +25°C and guaranteed by design for T_A = T_{MIN} to T_{MAX}.
Note 3: Guaranteed by design; not production tested.
Note 4: Guaranteed by ATE characterization. Limits are not production tested.
Note 5: In case of OUT1/OUT2 shorted to BAT, feedback network must protect FB1/FB2 from violating their absolute maximum ratings. For OUT1/OUT2 set below 3.3V, use an additional 5V clamp on FB1/FB2 with low parasitic capacitance.
Note 6: Limits do not include current-sense offset.

Typical Operating Characteristics

(V_{IN} = 14V, T_A = +25°C, see the *Typical Operating Circuits*, unless otherwise noted.)

SHUTDOWN CURRENT vs. TEMPERATURE

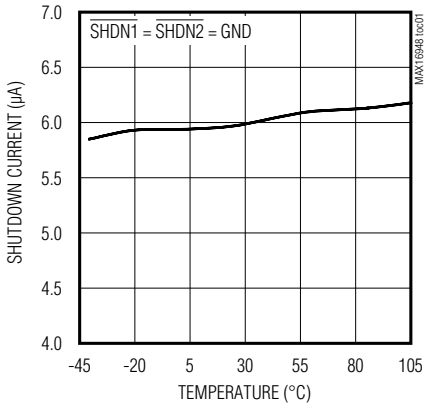

VOLTAGE DROP OF INTERNAL SWITCH vs. OUTPUT CURRENT

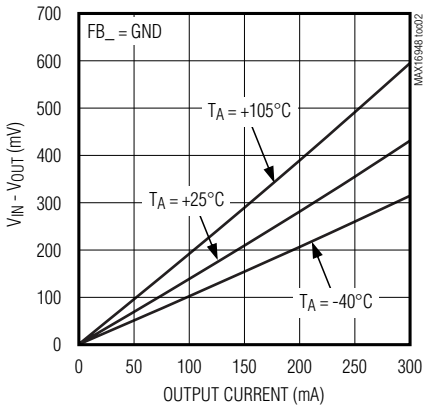

DROPOUT VOLTAGE vs. OUTPUT CURRENT

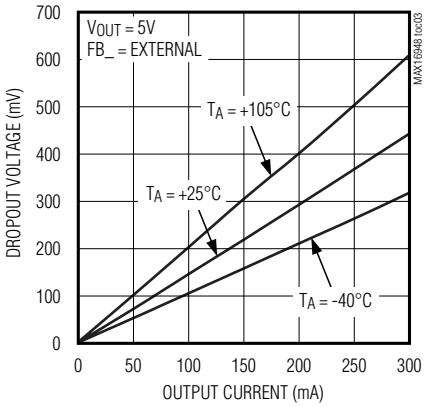

DROPOUT VOLTAGE vs. OUTPUT CURRENT

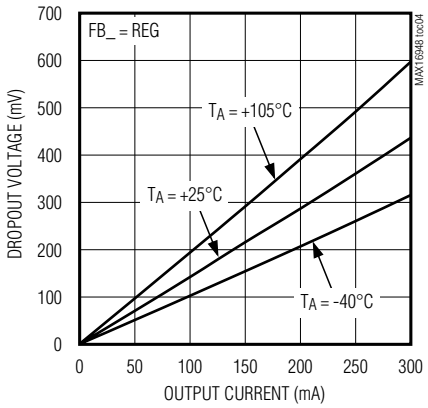

VOLTAGE DROP OF INTERNAL SWITCH vs. SUPPLY VOLTAGE

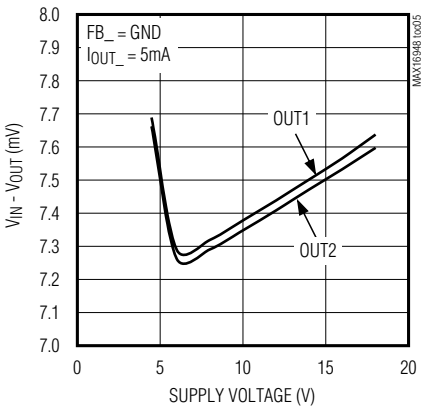

POWER-SUPPLY REJECTION RATIO vs. FREQUENCY

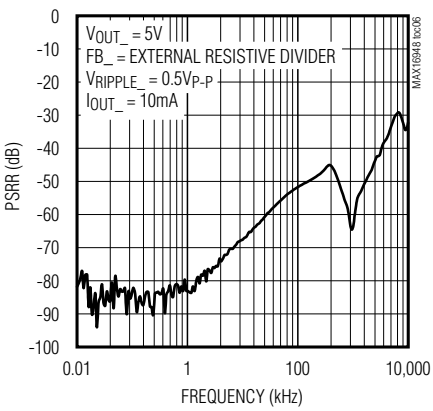

Typical Operating Characteristics (continued)

(V_{IN} = 14V, T_A = +25°C, see the Typical Operating Circuits, unless otherwise noted.)

POWER-SUPPLY REJECTION RATIO vs. FREQUENCY

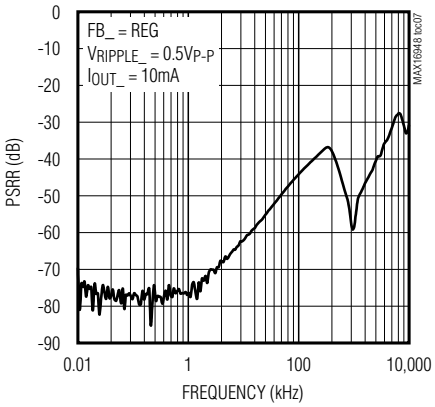

POWER-UP WAVEFORM (FB_ = REG, $I_{OUT_}$ = 90mA)

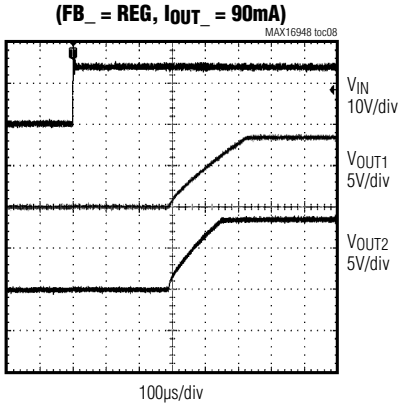

POWER-UP WAVEFORM (FB_ = GND, $I_{OUT_}$ = 90mA)

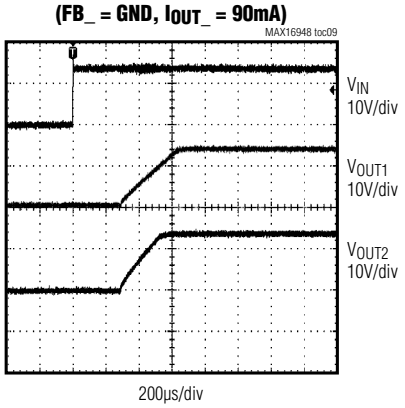

STARTUP WAVEFORM (FB_ = REG, $I_{OUT_}$ = 90mA)

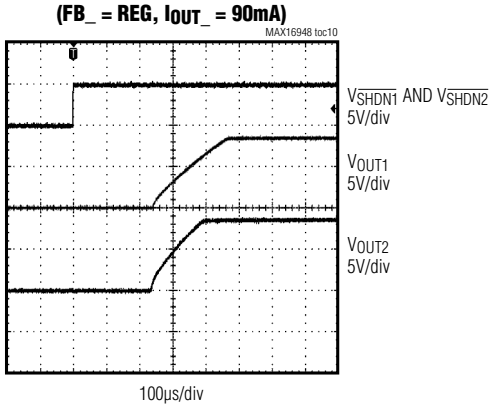

STARTUP WAVEFORM (FB_ = GND, $I_{OUT_}$ = 90mA)

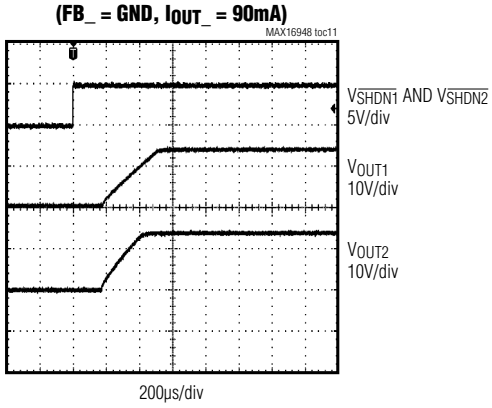

CURRENT-SENSE AMPLIFIER GAIN vs. TEMPERATURE

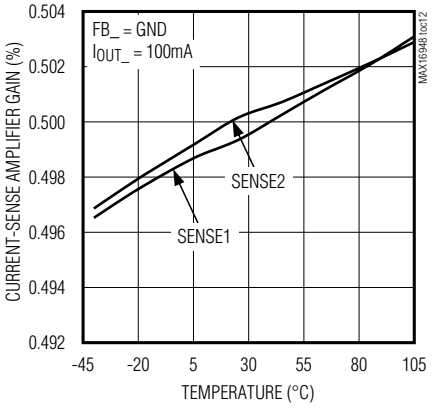

Typical Operating Characteristics (continued)

(V_{IN} = 14V, T_A = +25°C, see the *Typical Operating Circuits*, unless otherwise noted.)

CURRENT-SENSE AMPLIFIER GAIN vs. OUTPUT CURRENT

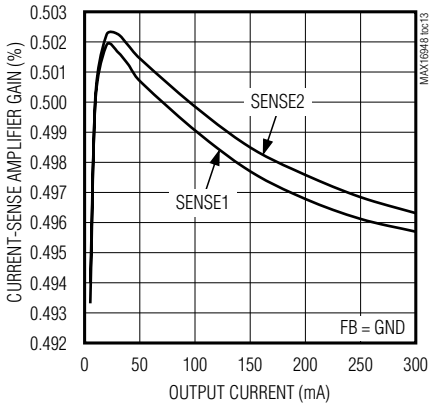

CURRENT-SENSE AMPLIFIER ERROR vs. OUTPUT CURRENT

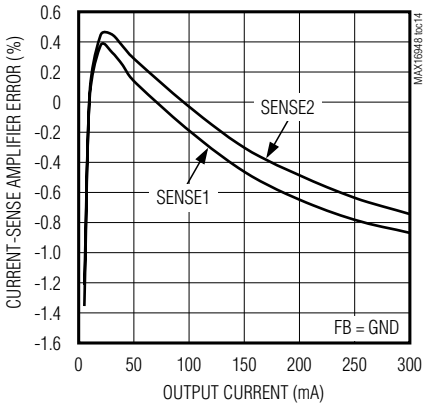

$V_{SENSE_}$ vs. $R_{SENSE_}$

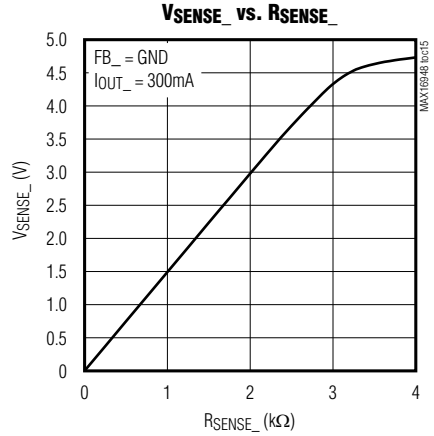

V_{REG} vs. I_{REG}

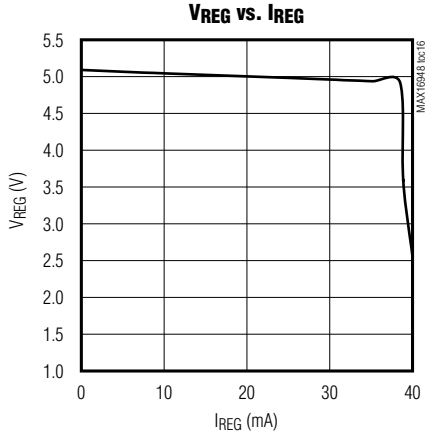

LINE TRANSIENT ($FB_$ = REG, $I_{OUT_}$ = 50mA)

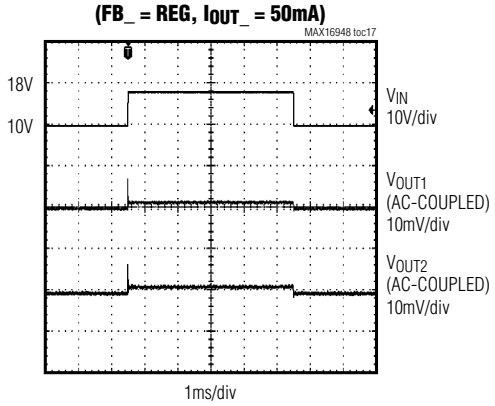

LINE TRANSIENT ($V_{OUT_}$ = 5V, $I_{OUT_}$ = 50mA)

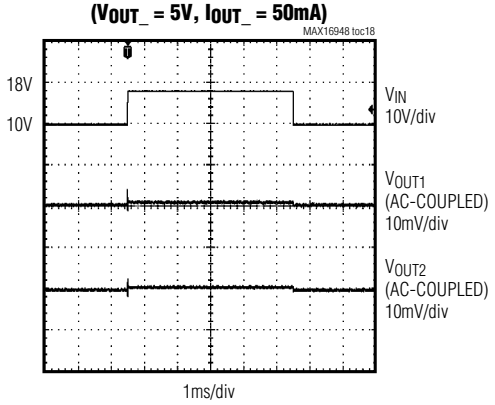

Pin Configurations

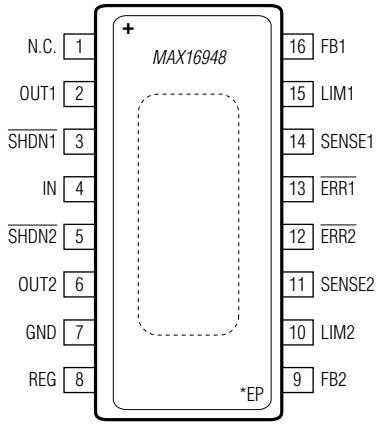

QSOP-EP/QSOP

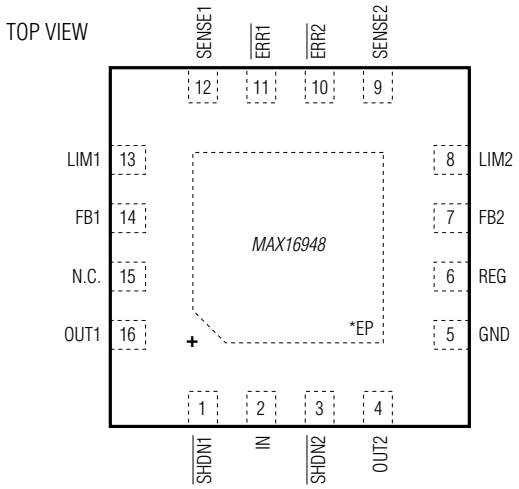

TQFN
(4mm × 4mm)

*CONNECT EP TO GND.

Pin Descriptions

PIN		NAME	FUNCTION
QSOP/ QSOP-EP	TQFN-EP		
1	15	N.C.	No Connection. Not internally connected.
2	16	OUT1	LDO/Switch Output 1 to Remote Load. Bypass OUT1 to GND with >1µF in parallel with 100nF low-ESR ceramic capacitors for regulator stability.
3	1	$\overline{SHDN1}$	Active-Low Shutdown Input for OUT1. $\overline{SHDN1}$ is pulled to GND with an internal 500kΩ resistor.
4	2	IN	Input Voltage. Bypass IN to GND with an electrolytic capacitor with a minimum value of 10µF and a low-ESR ceramic capacitor with a minimum value of 0.1µF.
5	3	$\overline{SHDN2}$	Active-Low Shutdown Input for OUT2. $\overline{SHDN2}$ is pulled to GND with an internal 500kΩ resistor.
6	4	OUT2	LDO/Switch Output 2 to remote load. Bypass OUT2 to GND with >1µF in parallel with 100nF low-ESR ceramic capacitors for regulator stability.
7	5	GND	Ground
8	6	REG	Internal 5V Regulator. Provides supply for internal low-voltage blocks, SENSE_, and LIM_ outputs.
9	7	FB2	Feedback Input for Setting the OUT2 Voltage. Connect FB2 to GND to select current-limited switch operation. Connect to an external resistive divider for adjustable output-voltage operation. Connect FB2 to REG to choose the internal resistive divider for the 8.5V regulator option.

Pin Descriptions (continued)

PIN		NAME	FUNCTION
QSOP/ QSOP-EP	TQFN-EP		
10	8	LIM2	Output of Current Sense for Limiting. This output is proportional to current flowing through OUT2. The internal current-limit amplifier is tripped when the voltage on LIM2 reaches 2.5V. Connect a resistor to GND to set the level for current limitation and a 0.1µF capacitor in parallel for frequency compensation of the current-limit loop.
11	9	SENSE2	Output of Current Sense for Sensing. The current of SENSE2 is proportional to the current flowing through OUT2. Connect a resistor from SENSE2 to GND to set the output voltage level. Additionally, connect a 0.1µF capacitor from SENSE2 to GND.
12	10	$\overline{ERR2}$	Open-Drain Fault Indicator Output 2
13	11	$\overline{ERR1}$	Open-Drain Fault Indicator Output 1
14	12	SENSE1	Output of Current Sense for Sensing. The current of SENSE1 is proportional to the current flowing through OUT1. Connect a resistor from SENSE1 to GND to set the output voltage level. Additionally, connect a 0.1µF capacitor from SENSE1 to GND.
15	13	LIM1	Output of Current Sense for Limiting. This output is proportional to current flowing through OUT1. The internal current-limit amplifier is tripped when the voltage on LIM1 reaches 2.5V. Connect a resistor to GND to set the level for current limitation and a 0.1µF capacitor in parallel for frequency compensation of the current-limit loop.
16	14	FB1	Feedback Input for Setting the OUT1 Voltage. Connect FB1 to GND to select current-limited switch operation. Connect to an external resistive divider for adjustable output-voltage operation. Connect FB1 to REG to choose the internal resistive divider for the 8.5V regulator option.
—	—	EP	Exposed Pad (MAX16948A only). Connect EP to the ground plane for optimal heat dissipation. Do not use EP as the primary electrical ground connection.

Functional Diagram

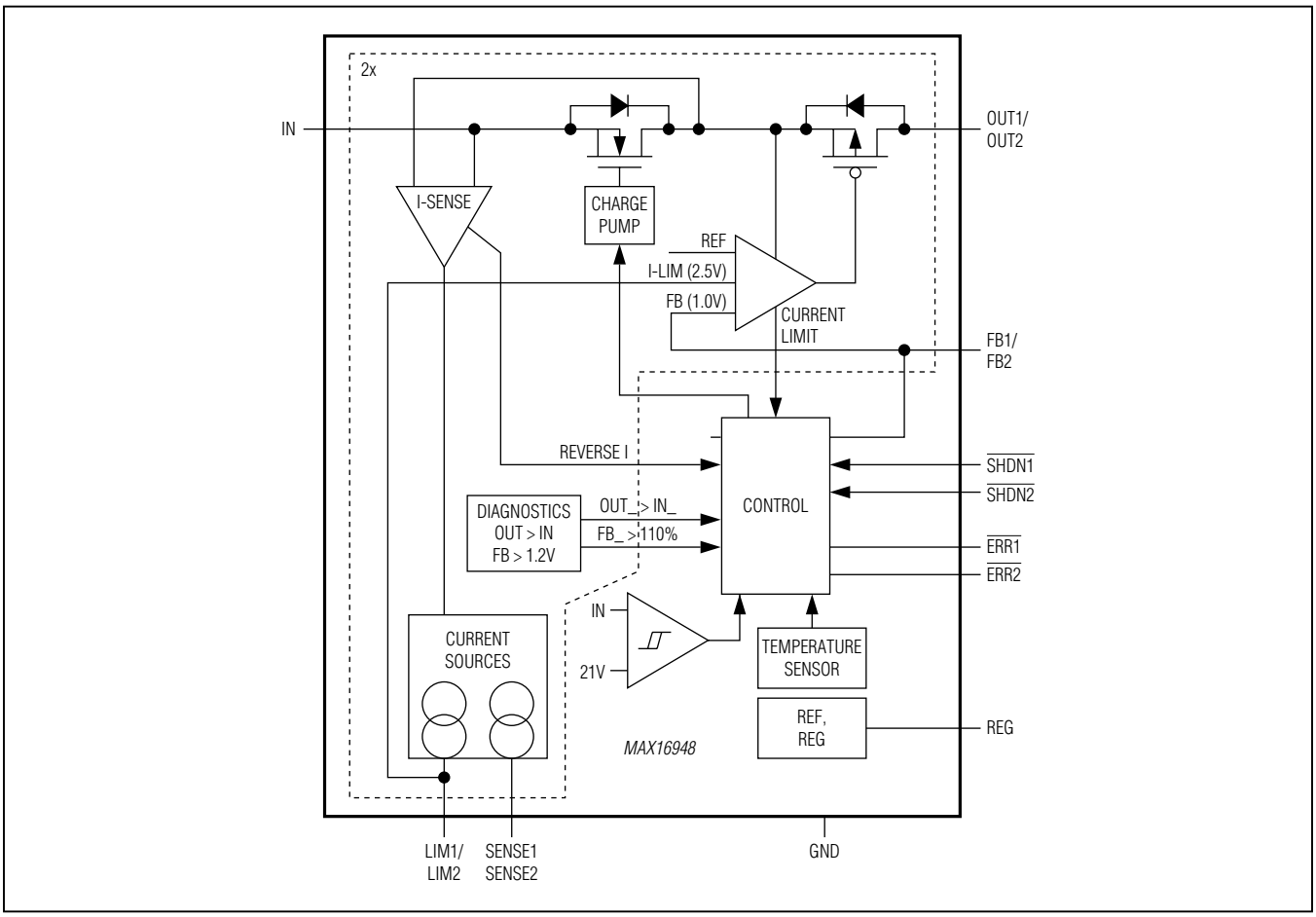

Detailed Description

The MAX16948 is a dual high-voltage, current-sensing LDO/switch designed to operate with an input voltage range from 4.5V to 28V (45V load dump tolerant). The device provides phantom power over coax cable to remote radio frequency low-noise amplifiers (LNAs) in automotive systems with a maximum current of 300mA per channel. The device also provides a fixed regulated output voltage of 8.5V, an adjustable 1V to 12.5V output voltage, or the device can be configured as a switch. The device is ideal for providing phantom power to remote radio-frequency LNAs in automotive applications.

The device monitors the load current, and its current-sense outputs provide a current proportional to the sensed load current. An accurate programmable current limit protects the input supply against both overcurrent and short-circuit conditions. The device features open-drain fault indicator outputs and overtemperature shutdown.

The device features short-to-battery protection to latch off the internal LDO/switch during a short-to-battery event. During a thermal overload, the device reduces power dissipation by going into thermal shutdown. It includes dual independent, active-low, high-voltage-compatible shutdown inputs to place each channel in a low-power shutdown mode.

Fault Detection

The device monitors the load current through an internal sense resistor to protect against short-circuit, short-to-battery, and reverse current faults. In addition, the device also detects input and output overvoltage conditions and features thermal shutdown.

Short Circuit and Overcurrent

The current limit of each channel is programmed with an external resistor connected to the output of the current sense amplifiers LIM_ to protect the device during short-circuit or overcurrent conditions. When the voltage at LIM_ reaches the internal 2.5V threshold, the output current of the LDO/switch is limited, and $\overline{ERR_}$ asserts low but the output is not disabled. The $\overline{ERR_}$ and LIM_ outputs should be monitored by the µC, and the channel experiencing the short-circuit or overcurrent condition should be disabled by pulling $\overline{SHDN_}$ low. If this condition persists, thermal shutdown could occur and both outputs could be disabled.

Short-to-Battery and Reverse Current Detection

It is possible for OUT_ to be shorted to the battery due to a fault in the system. Each channel detects this failure by comparing the voltage at OUT_ and IN before the switch turns on. Every time the LDO/switch is enabled on the rising edge of $\overline{SHDN_}$ or during the exiting of thermal shutdown, the short-to-battery detection is performed. At this point, if the device detects the short-to-battery fault, the LDO/switch stays off and $\overline{ERR_}$ is asserted low. The fault is latched, and the startup resumes when the short-to-battery fault is removed and $\overline{SHDN_}$ is toggled.

During normal operation if a short-to-battery fault results in reverse current for more than 5µs (typ) the LDO/switch is latched off and $\overline{ERR_}$ is asserted low. To remove the latched condition after a short-to-battery (reverse current) fault, the fault condition must first be removed and $\overline{SHDN_}$ must be toggled.

Series inductance and the output capacitor can produce ringing during large load transients when enabling the LDO/switch, resulting in an output voltage that temporarily exceeds the input voltage. Blanking is implemented during startup. The reverse current blanking time (t_{REV_BLANK}) is 16ms (typ).

When the MAX16948 is operated with input voltage close to the output voltage, as in switch mode operation or LDO mode in dropout, care must be taken to avoid a false reverse current detection in the presence of a short circuit to ground fault. If both channels are enabled and one channel is shorted to ground after startup, the current drawn from C_{IN} may result in a temporary dip in the intput voltage, which may trigger the reverse current detection fault. To aovoid this false trigger event, use an electrolytic capacitor of at least 100µF.

Thermal Shutdown

Thermal shutdown circuitry protects the device from overheating. The switch turns off immediately when the junction temperature exceeds +160°C (typ). The switch turns on again after the device temperature drops by approximately 15°C (typ).

FB Inputs (FB1/FB2)

FB1 and FB2 control the output voltage on OUT1 and OUT2. Connect FB_ to GND to select current-limited switch operation. Connect to an external resistive divider for adjustable output voltage operation (feedback voltage 1V (typ)). Connect FB_ to REG to choose the internal resistive divider for the 8.5V regulator option.

Table 1. Fault Response

DEVICE STATUS	$V_{LIM_}$(V)	$V_{\overline{ERR}}$	LDO/SW OUTPUT	LATCHED
Normal Operation	$0 \le V_{LIM_} < 2.5$	High	Enabled	No
Short Circuit to GND or Overcurrent	2.5	Low	Enabled	No
$V_{OUT} > V_{IN}$ at Startup	0	Low	Disabled	Yes
Reverse Current	0	Low	Disabled	Yes
$V_{FB} > 1.2V$	0	High	Enabled	No
Input Overvoltage	0	Low	Disabled	No
Thermal Shutdown	0	High	Disabled	No

Undervoltage and Overvoltage Lockout

The device includes undervoltage lockout circuitry (UVLO) to prevent erroneous switch operation when the input voltage goes below 4.45V (max) during startup and brownout conditions. Input voltages of less than 4.45V inhibit operation of the device by turning off the internal charge pump and the switch.

The device also features an overvoltage lockout (OVLO) threshold of +21V (typ). When V_{IN} is greater than V_{OVLO}, the device immediately turns off the switch and the internal charge pump.

Shutdown ($\overline{SHDN1}$, $\overline{SHDN2}$)

The device features two active-low shutdown inputs ($\overline{SHDN1}$, $\overline{SHDN2}$) to place the device in a low-power shutdown mode. $\overline{SHDN1}$ controls OUT1 and $\overline{SHDN2}$ controls OUT2. The device turns off both channels and consumes a maximum of 7µA (at V_{IN} = 12V) of shutdown current when both $\overline{SHDN1}$ and $\overline{SHDN2}$ are low. Driving $\overline{SHDN1}$ and/or $\overline{SHDN2}$ high initiates device turn-on with short-to-battery detection. $\overline{SHDN1}$ and $\overline{SHDN2}$ are pulled to GND with an internal 500kΩ resistor.

Internal Voltage Regulator (REG)

The device features an internal regulator that regulates the input voltage to +5V to power all internal circuitry. Bypass the regulator output (REG) to GND with a 1µF ceramic capacitor. The REG output can be used to supply external circuitry up to a maximum 15mA current.

Applications Information/External Component Selection

Fixed/Adjustable Output Voltage

The device is configurable to provide a fixed 8.5V output or as an adjustable LDO with an output between 1V and 12.5V. Connect FB_ to REG to configure the device as an 8.5V LDO. Connect a resistive divider between OUT_, FB_, and GND to set the output to the desired voltage. FB_ is regulated to 1.0V with ±3% accuracy for a load current between 5mA and 150mA. Select a value for R2 and calculate R1 as follows:

$$R1 = \left(\frac{V_{OUT_}}{V_{FB_}} - 1\right)R2$$

where R2 must be less than or equal to 1kΩ. Select R1 and R2 such that the maximum input bias current at FB (±0.5µA) is negligible compared to the current flowing through R1 and R2.

Current-Limit Resistor and Capacitor Selection

The current-sense outputs at LIM1/LIM2 are proportional to the load current at OUT1/OUT2 and are internally connected to a current-limit comparator referenced to 2.5V. The desired current limit is set with an external resistor $R_{LIM_}$ using the following equation:

$$R_{LIM_}(\Omega) = \frac{2.5(V)}{0.5\% \times I_{LOAD_MAX(A)}}$$

A 0.1µF compensation capacitor $C_{LIM_}$ must be placed in parallel with $R_{LIM_}$ to establish a dominant pole in the current limiting loop to maintain stability and to prevent fast current transients from prematurely triggering the current limit.

Current-Sense Resistor Selection

The current-sense outputs SENSE1/SENSE2 are proportional to the load current at OUT1/OUT2. An output resistor $R_{SENSE_}$ must be connected between SENSE1/SENSE2 and GND to generate a current-sense voltage prior to sampling by an ADC. R_{SENSE} is calculated using the following equation:

$$R_{SENSE_}(\Omega) = \frac{V_{ADC,FS}(V)}{0.5\% \times I_{LOAD_MAX(A)}}$$

where $V_{ADC,FS}$ is the full-scale input voltage of the ADC. A 0.1µF capacitor C_{SENSE} should be placed in parallel with R_{SENSE} to hold the voltage during ADC sampling cycles.

In addition to ADC sampling, open-load or overcurrent conditions can be detected by using external comparators and splitting $R_{SENSE_}$ into a resistive divider as shown in Figure 1. In this circuit the outputs of comparators U1 and

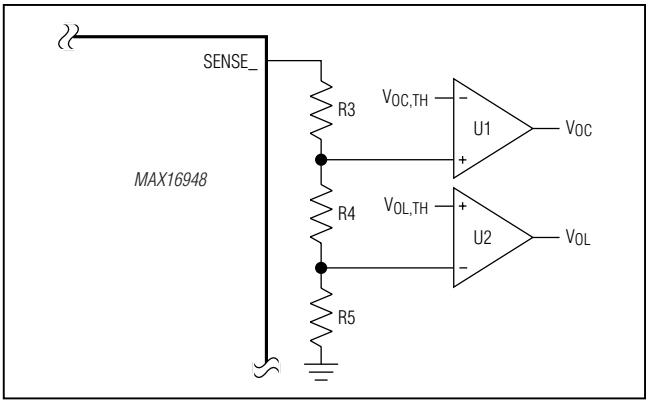

Figure 1. Open-Load and Overcurrent Detection Circuit

Table 2. Open-Load and Overcurrent-Detection Circuit States

OC	OL	STATE
0	0	Normal Operation
0	1	Open-Load Condition
1	0	Overcurrent Condition
1	1	Invalid State

U2 indicate the operating state of the circuit as shown in Table 2.

The open-load and overcurrent limits are set using the following equations:

$$R5(\Omega) = \frac{V_{OL,TH}(V)}{0.5\% \times I_{OPEN-LOAD(A)}}$$

where $V_{OL,TH}$ is the open-load voltage threshold for comparator U2 and $I_{OPEN-LOAD}$ is the desired open-load threshold for the current flowing through the LDO/switch.

$$R4(\Omega) = \frac{V_{OC,TH}(V)}{0.5\% \times I_{OVERCURRENT(A)}} - R5$$

where $V_{OC,TH}$ is the overcurrent voltage threshold for comparator U1. $I_{OVERCURRENT}$ is the desired overcurrent threshold for the current flowing through the LDO/switch and the internal current limit should be programmed such that $I_{LOAD_MAX} > I_{OVERCURRENT}$.

$$R3(\Omega) = R_{SENSE_} - R4 - R5$$

The open-load voltage threshold $V_{OL,TH}$ and overcurrent threshold $V_{OC,TH}$ can be generated from REG utilizing a resistive divider. The thresholds should be selected such that $V_{OC,TH} > V_{OL,TH}$.

Input Capacitor

Connect a parallel electrolytic capacitor and a low-ESR ceramic capacitor from IN to GND to limit the input-voltage drop during momentary output short-circuit conditions and to protect the device against transients due to inductance on the IN line. For example, use at least a 0.1µF ceramic capacitor in parallel with a 10µF electrolytic capactior if the input inductance (including any stray inductance) is estimated to be 20µH. Larger capacitor values reduce the voltage undershoot and overshoot in case of reverse current.

Output Capacitor

Connect >1µF in parallel with 0.1µF low-ESR ceramic capacitors between OUT1/OUT2 and GND for regulator stability. These capacitors should be placed as close to the device as possible. Utilize capacitors with an X7R dielectric to ensure stability over the operating temperature range of the device.

In an analogous fashion to the input capacitor, an output capacitor protects the device against transients due to any series inductance in the output. Under no conditions should the voltage on OUT1/OUT2 go below -0.3V as specified in the *Absolute Maximum Ratings* section. A Schottky diode is required as a clamp if transients are expected to go below ground.

Automotive Dual Remote Antenna Current-Sense LDO/Switch

Typical Operating Circuits (continued)

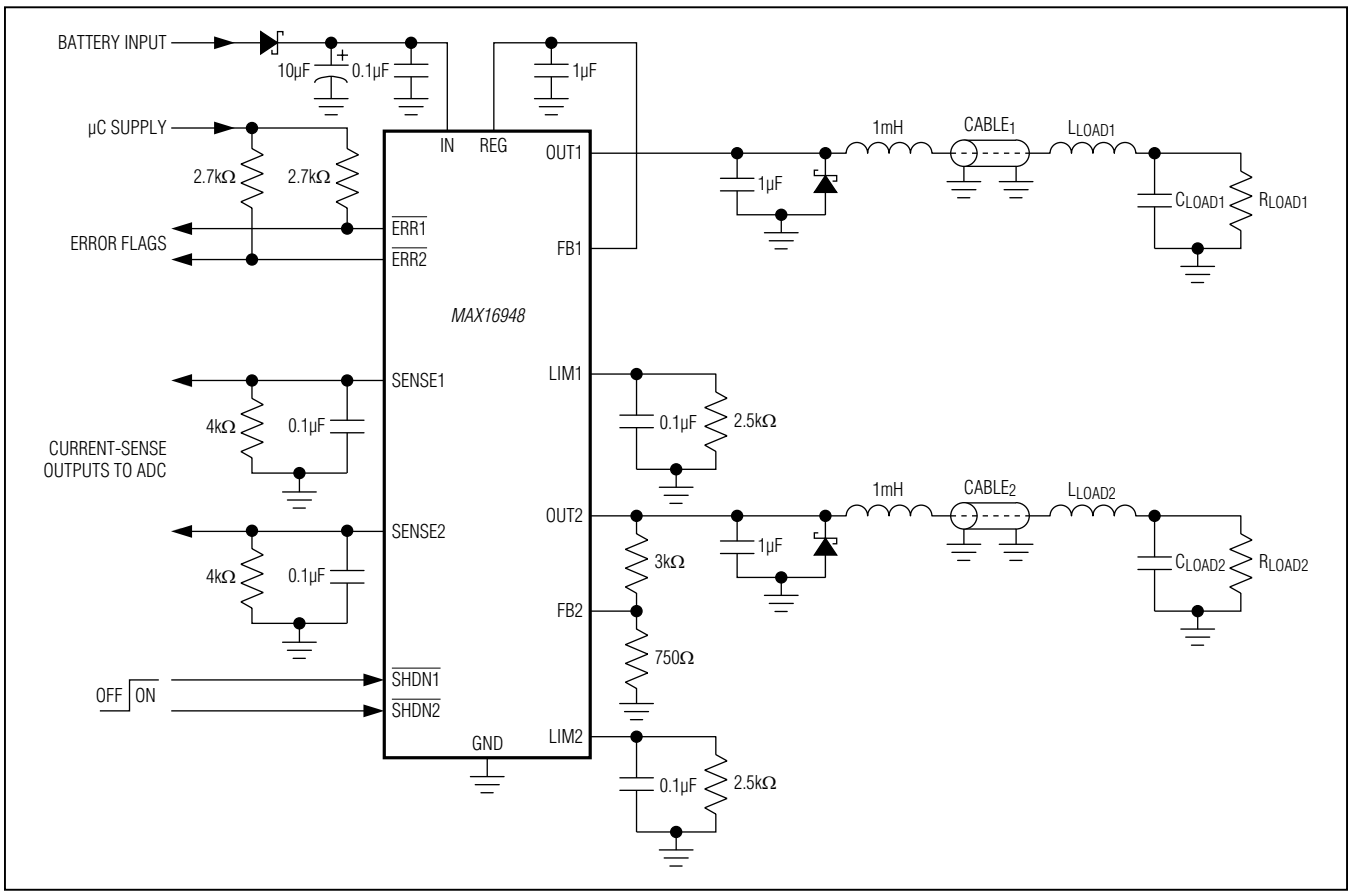

Ordering Information

PART	TEMP RANGE	PIN-PACKAGE
MAX16948AGTE/V+	-40°C to +105°C	16 TQFN-EP**
MAX16948AGEE/V+	-40°C to +105°C	16 QSOP-EP**
MAX16948BGEE/V+*	-40°C to +105°C	16 QSOP

/V denotes an automotive qualified part.
+Denotes a lead(Pb)-free/RoHS-compliant package.
**Future product—contact factory for availability.*
***EP = Exposed pad.*

Chip Information

PROCESS: BiCMOS

Package Information

For the latest package outline information and land patterns (footprints), go to **www.maximintegrated.com/packages**. Note that a "+", "#", or "-" in the package code indicates RoHS status only. Package drawings may show a different suffix character, but the drawing pertains to the package regardless of RoHS status.

PACKAGE TYPE	PACKAGE CODE	OUTLINE NO.	LAND PATTERN NO.
16 TQFN-EP	T1644+4	21-0139	90-0070
16 QSOP-EP	E16E+9	21-0112	90-0240
16 QSOP	E16+5	21-0055	90-0167

Automotive Dual Remote Antenna Current-Sense LDO/Switch

Revision History

REVISION NUMBER	REVISION DATE	DESCRIPTION	PAGES CHANGED
0	9/11	Initial release	—
1	4/12	Updated maximum output voltage	1, 3, 10, 12
2	5/13	Added light-load current-sense specs to *Electrical Characteristics* table	3

Maxim Integrated cannot assume responsibility for use of any circuitry other than circuitry entirely embodied in a Maxim Integrated product. No circuit patent licenses are implied. Maxim Integrated reserves the right to change the circuitry and specifications without notice at any time. The parametric values (min and max limits) shown in the Electrical Characteristics table are guaranteed. Other parametric values quoted in this data sheet are provided for guidance.

© 2013 Maxim Integrated Products, Inc. Maxim Integrated and the Maxim Integrated logo are trademarks of Maxim Integrated Products, Inc.