maxim integrated™

MAX16056–MAX16059

125nA Supervisory Circuits with Capacitor-Adjustable Reset and Watchdog Timeouts

General Description

The MAX16056–MAX16059 are ultra-low-current 125nA (typ) microprocessor (µP) supervisory circuits that monitor a single system supply voltage. These devices assert an active-low reset signal whenever the V_{CC} supply voltage drops below the factory-trimmed reset threshold, manual reset is pulled low, or the watchdog timer runs out (MAX16056/MAX16058). The reset output remains asserted for an adjustable reset timeout period after V_{CC} rises above the reset threshold. Factory-trimmed reset threshold voltages are offered from 1.575V to 4.625V in approximately 100mV increments (see Table 1).

These devices feature adjustable reset and watchdog timeout using external capacitors. The MAX16056/MAX16058 contain a watchdog timer with a watchdog select input (WDS) that multiplies the watchdog timeout period by 128. The MAX16057/MAX16059 do not have the watchdog feature.

The MAX16056–MAX16059 are available in either push-pull or open-drain output-type configurations (see the *Ordering Information*). These devices are fully specified over the -40°C to +125°C automotive temperature range. The MAX16056/MAX16058 are available in the 8-pin TDFN package, and the MAX16057/MAX16059 are available in the 6-pin TDFN package.

Applications

Portable/Battery-Powered Equipment

PDAs/Cell Phones

MP3 Players/Pagers

Glucose Monitors/Patient Monitors

Metering/HVAC

Typical Operating Circuit appears at end of data sheet.

Features

- **Ultra-Low 125nA (typ) Supply Current**
- **1.1V to 5.5V Operating Supply Range**
- **Factory-Set Reset Threshold Options from 1.575V to 4.625V in Approximately 100mV Increments**
- **Capacitor-Adjustable Reset Timeout**
- **Capacitor-Adjustable Watchdog Timeout (MAX16056/MAX16058)**
- **Watchdog Timer Capacitor Open Detect Function**
- **Optional Watchdog Disable Function (MAX16056/MAX16058)**
- **Manual Reset Input**
- **Guaranteed $\overline{RESET}$ Valid for $V_{CC} \geq 1.1V$**
- **Push-Pull or Open-Drain $\overline{RESET}$ Output Options**
- **Power-Supply Transient Immunity**
- **Small, 3mm x 3mm TDFN Package**

Ordering Information

PART	PIN-PACKAGE	RESET OUTPUT	WATCH-DOG TIMER
MAX16056ATA_ _+T	8 TDFN-EP*	Push-Pull	Yes
MAX16057ATT_ _+T	6 TDFN-EP*	Push-Pull	No
MAX16058ATA_ _+T	8 TDFN-EP*	Open-Drain	Yes
MAX16059ATT_ _+T	6 TDFN-EP*	Open-Drain	No

Note: *All devices are specified over the -40°C to +125°C operating temperature range.*

+Denotes a lead(Pb)-free/RoHS-compliant package.

T = Tape and reel.

**EP = Exposed pad.*

"_ _" represents the two number suffix needed when ordering the reset threshold voltage value (see Table 1).

Standard versions and their package top marks are shown in Table 3 at the end of data sheet.

Pin Configurations

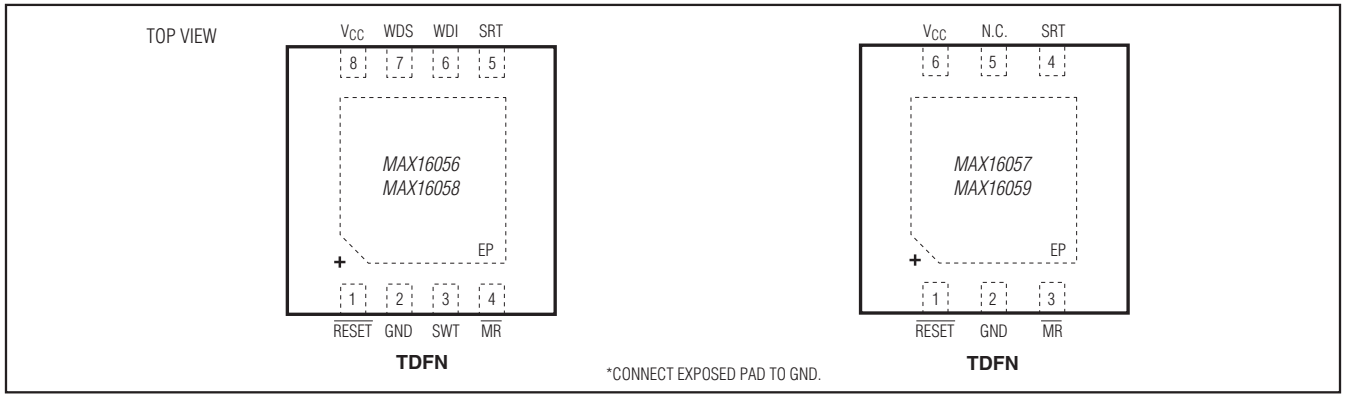

For pricing, delivery, and ordering information, please contact Maxim Direct at 1-888-629-4642, or visit Maxim's website at www.maximintegrated.com.

19-4686; Rev 2; 4/13

ABSOLUTE MAXIMUM RATINGS

V_{CC} to GND .....-0.3V to +6V
SRT, SWT, WDS, $\overline{MR}$, WDI, to GND .....-0.3V to (V_{CC} + 0.3V)
$\overline{RESET}$ (Push-Pull) to GND .....-0.3V to (V_{CC} + 0.3V)
$\overline{RESET}$ (Open-Drain) to GND .....-0.3V to +6V
Input Current (all pins) ..... ±20mA
Output Current ($\overline{RESET}$) ..... ±20mA
Continuous Power Dissipation (T_A = +70°C)
6-Pin TDFN (derate 23.8mW/°C above +70°C) 1905mW
8-Pin TDFN (derate 24.4mW/°C above +70°C) 1951mW

Junction-to-Ambient Thermal Resistance (θ_{JA}) (Note 1)
6-Pin TDFN .....42°C/W
8-Pin TDFN .....41°C/W
Junction-to-Case Thermal Resistance (θ_{JC}) (Note 1)
6-Pin TDFN .....9°C/W
8-Pin TDFN .....8°C/W
Operating Temperature Range .....-40°C to +125°C
Storage Temperature Range .....-65°C to +150°C
Junction Temperature .....+150°C
Lead Temperature (soldering, 10s) .....+300°C
Soldering Temperature (reflow) .....+260°C

Note 1: Package thermal resistances were obtained using the method described in JEDEC specification JESD51-7, using a four-layer board. For detailed information on package thermal considerations, refer to **www.maximintegrated.com/thermal-tutorial**.

Stresses beyond those listed under "Absolute Maximum Ratings" may cause permanent damage to the device. These are stress ratings only, and functional operation of the device at these or any other conditions beyond those indicated in the operational sections of the specifications is not implied. Exposure to absolute maximum rating conditions for extended periods may affect device reliability.

ELECTRICAL CHARACTERISTICS

(V_{CC} = 1.2V to 5.5V, T_A = T_{MIN} to T_{MAX}, unless otherwise noted. Typical values are at V_{CC} = 3.3V, T_A = +25°C.) (Note 2)

PARAMETER	SYMBOL	CONDITIONS		MIN	TYP	MAX	UNITS
Supply Voltage	V_{CC}	T_A = 0°C to +125°C		1.1		5.5	V
		T_A = -40°C to 0°C		1.2		5.5	
Supply Current	I_{CC}	V_{CC} > V_{TH} + 150mV, no load, reset output deasserted (Note 3)	V_{CC} = 5.0V, T_A = -40°C to +85°C		142	210	nA
			V_{CC} = 3.3V, T_A = -40°C to +85°C		132	185	
			V_{CC} = 1.8V, T_A = -40°C to +85°C		125	175	
			V_{CC} = 5.0V, T_A = -40°C to +125°C		142	430	
			V_{CC} = 3.3V, T_A = -40°C to +125°C		132	415	
			V_{CC} = 1.8V, T_A = -40°C to +125°C		125	400	
		V_{CC} < V_{TH}, no load, reset output asserted			7	15	µA
V_{CC} Reset Threshold	V_{TH}	V_{CC} falling (see Table 1)	T_A = +25°C	V_{TH} - 1.5%		V_{TH} + 1.5%	V
			T_A = -40°C to +125°C	V_{TH} - 2.5%		V_{TH} + 2.5%	
Hysteresis	V_{HYST}	V_{CC} rising			0.5		%
V_{CC} to Reset Delay	t_{RD}	V_{CC} falling from (V_{TH} + 100mV) to (V_{TH} - 100mV) at 10mV/µs			80		µs
Reset Timeout Period	t_{RP}	C_{SRT} = 2700pF (Note 4)		10.5	14.18	17.0	ms

ELECTRICAL CHARACTERISTICS (continued)

(V_{CC} = 1.2V to 5.5V, T_A = T_{MIN} to T_{MAX}, unless otherwise noted. Typical values are at V_{CC} = 3.3V, T_A = +25°C.) (Note 2)

PARAMETER	SYMBOL	CONDITIONS		MIN	TYP	MAX	UNITS
SRT Ramp Current	I_{RAMP1}	V_{SRT} = 0V to V_{RAMP1}, V_{CC} = 1.6V to 5V	T_A = -40°C to +125°C	197	240	282	nA
			T_A = +25°C	210	240	270	
SRT Ramp Threshold	V_{RAMP1}	V_{CC} = 1.6V to 5V (V_{RAMP} rising)		1.173	1.235	1.297	V
Watchdog Timeout Clock Period	t_{WDPER}	T_A = +25°C		5	6.4	8	ms
		T_A = -40°C to +125°C		3.5	6.4	9.5	
SWT Ramp Current	I_{RAMP2}	V_{SWT} = 0V to V_{RAMP2}, V_{CC} = 1.6V to 5V	T_A = -40°C to +125°C	197	240	282	nA
			T_A = +25°C	210	240	270	
SWT Ramp Threshold	V_{RAMP2}	V_{CC} = 1.6V to 5V (V_{RAMP2} rising)		1.173	1.235	1.297	V
$\overline{RESET}$ Output Voltage	V_{OL}	V_{CC} ≥ 1.0V, I_{SINK} = 50µA				0.3	V
		V_{CC} ≥ 2.7V, I_{SINK} = 1.2mA				0.3	
		V_{CC} ≥ 4.5V, I_{SINK} = 3.2mA				0.4	
	V_{OH}	MAX16056/MAX16057	V_{CC} ≥ 1.8V, I_{SOURCE} = 200µA	0.8 x V_{CC}			
			V_{CC} ≥ 2.25V, I_{SOURCE} = 500µA	0.8 x V_{CC}			
			V_{CC} ≥ 4.5V, I_{SOURCE} = 800µA	0.8 x V_{CC}			
$\overline{RESET}$ Output-Leakage Current, Open Drain	I_{LKG}	V_{CC} > V_{TH}, reset not asserted, $V_{\overline{RESET}}$ = 5.5V (MAX16058/MAX16059)				1.0	µA
Input-Logic Levels	V_{IH}			0.7 x V_{CC}			V
	V_{IL}					0.3 x V_{CC}	
$\overline{MR}$ Minimum Pulse Width	t_{MPW}			1			µs
$\overline{MR}$ Glitch Rejection					200		ns
$\overline{MR}$ to $\overline{RESET}$ Delay	t_{MRD}				250		ns
WDI Minimum Pulse Width		(Note 5)		150			ns
Input Leakage Current		$\overline{MR}$, WDI, WDS is connected to GND or V_{CC}		-100		+100	nA

Note 2: Devices are production tested at T_A = +25°C. Specifications over temperature limits are guaranteed by design.
Note 3: WDI input period is 1s with t_{RISE} and t_{FALL} < 50ns.
Note 4: Worst case of SRT ramp current and voltage is used to guarantee minimum and maximum limits.
Note 5: Guaranteed by design, not production tested.

Typical Operating Characteristics

(V_{CC} = 2.5V, T_A = +25°C, unless otherwise noted.)

SUPPLY CURRENT vs. SUPPLY VOLTAGE

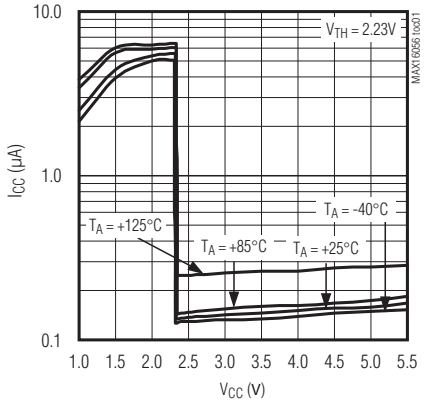

SUPPLY CURRENT vs. TEMPERATURE

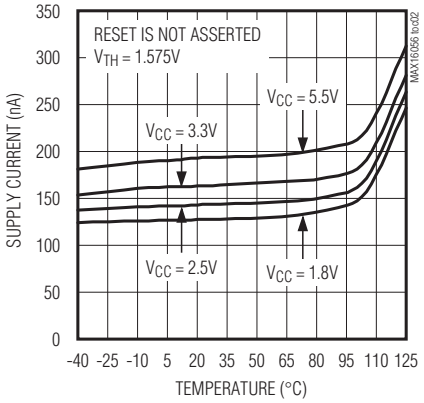

RESET TIMEOUT PERIOD vs. C_{SRT}

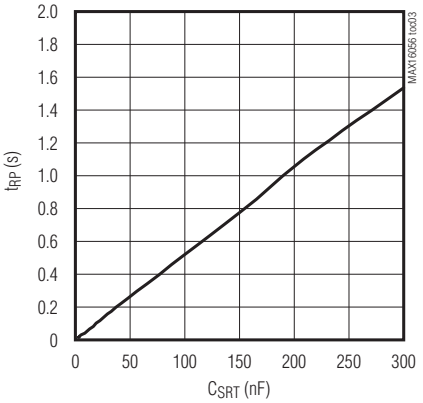

NORMALIZED RESET TIMEOUT PERIOD vs. TEMPERATURE

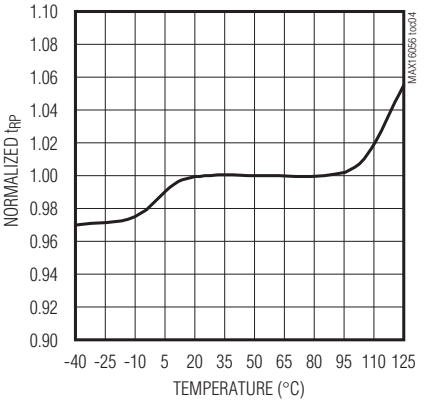

NORMALIZED WATCHDOG TIMEOUT PERIOD vs. TEMPERATURE

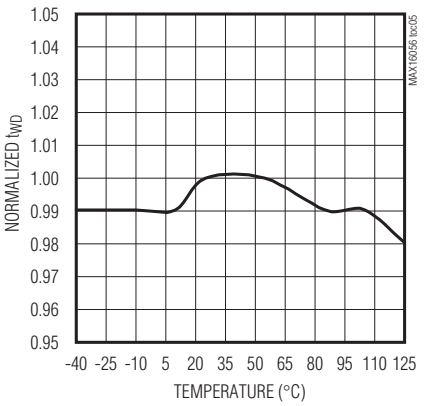

MAXIMUM V_{CC} TRANSIENT DURATION vs. RESET THRESHOLD OVERDRIVE

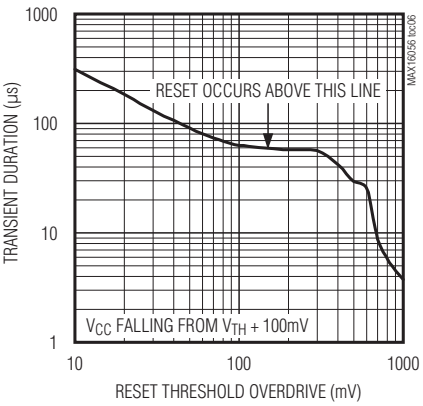

NORMALIZED RESET THRESHOLD VOLTAGE vs. TEMPERATURE

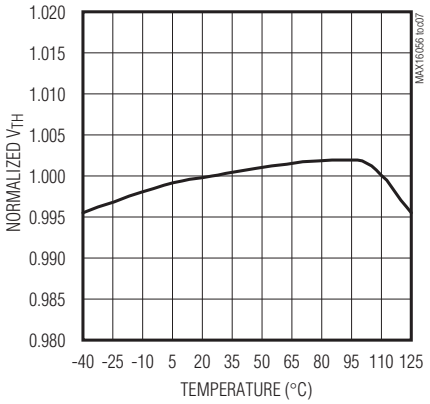

V_{CC} TO RESET DELAY vs. TEMPERATURE

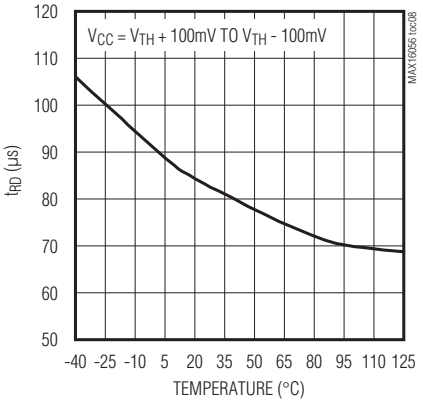

Typical Operating Characteristics (continued)

(V_{CC} = 2.5V, T_A = +25°C, unless otherwise noted.)

$\overline{RESET}$ OUTPUT-LOW VOLTAGE vs. SINK CURRENT

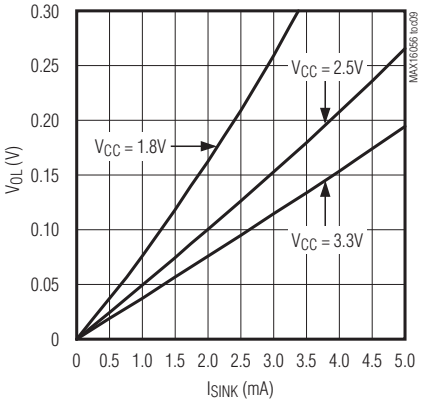

$\overline{RESET}$ OUTPUT-HIGH VOLTAGE vs. SOURCE CURRENT

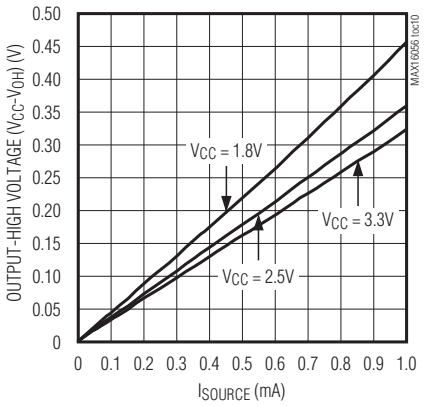

SUPPLY CURRENT vs. WATCHDOG SWITCHING FREQUENCY

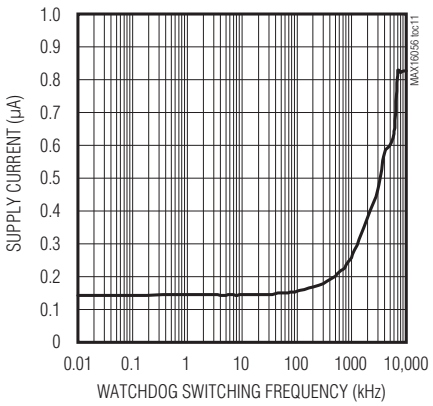

MANUAL RESET DELAY vs. TEMPERATURE

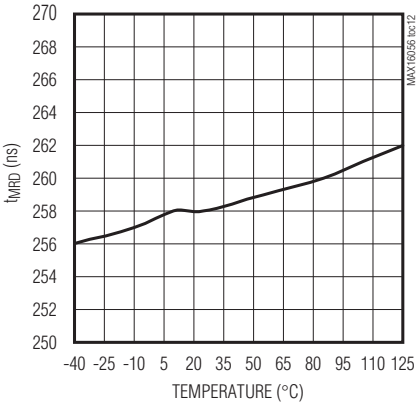

MANUAL RESET DELAY

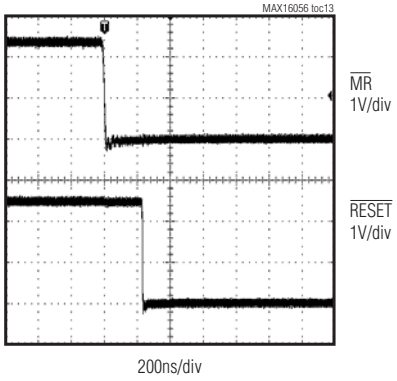

$\overline{RESET}$ SINK CAPABILITY vs. SUPPLY VOLTAGE

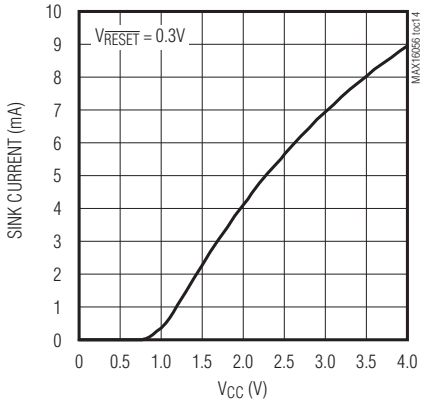

$\overline{RESET}$ SOURCE CAPABILITY vs. SUPPLY VOLTAGE

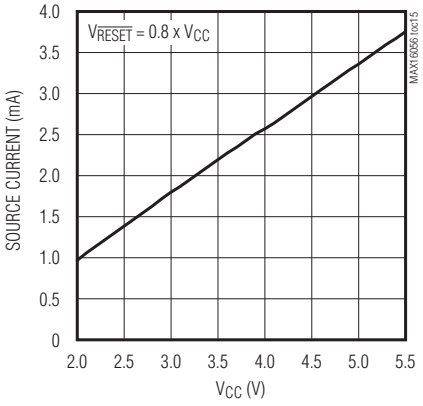

Pin Description

PIN		NAME	FUNCTION
MAX16056/ MAX16058	MAX16057/ MAX16059		
1	1	$\overline{RESET}$	Push-Pull or Open-Drain Reset Output. $\overline{RESET}$ asserts whenever V_{CC} drops below the selected reset threshold voltage (V_{TH}) or manual reset is pulled low. $\overline{RESET}$ remains low for the reset timeout period after all reset conditions are deasserted, and then goes high. The watchdog timer triggers a reset pulse (t_{RP}) whenever a watchdog fault occurs (MAX16056/MAX16058).
2	2	GND	Ground
3	—	SWT	Watchdog Timeout Input. Connect a capacitor between SWT and GND to set the basic watchdog timeout period (t_{WD}). Determine the period by the formula t_{WD} = Floor[C_{SWT} x 5.15 x 10^6/6.4ms] x 6.4ms + 3.2ms (Note 6) with t_{WD} in seconds and C_{SWT} in Farads, or use Table 2. Extend the basic watchdog timeout period by using the WDS input. Connect SWT to ground to disable the watchdog timer function. The value of the capacitor must be between 2275pF and 0.54µF to have a valid watchdog timeout period.
4	3	$\overline{MR}$	Manual-Reset Input. Drive $\overline{MR}$ low to manually reset the device. $\overline{RESET}$ remains asserted for the reset timeout period after $\overline{MR}$ is released. There is no internal pullup on $\overline{MR}$. $\overline{MR}$ must not be left unconnected. Connect $\overline{MR}$ to V_{CC} if not used.
5	4	SRT	Reset Timeout Input. Connect a capacitor from SRT to GND to select the reset timeout period. Determine the period as follows: t_{RP} = 5.15 x 10^6 x C_{SRT} with t_{RP} in seconds and C_{SRT} in Farads, or use Table 2. The value of the capacitor must be between 39pF and 4.7µF.
6	—	WDI	Watchdog Input. A falling transition must occur on WDI within the selected watchdog timeout period or a reset pulse occurs. The watchdog timer clears when a falling transition occurs on WDI or whenever $\overline{RESET}$ is asserted. Connect SWT to ground to disable the watchdog timer function.
7	—	WDS	Watchdog Select Input. WDS selects the watchdog timeout mode. Connect WDS to ground to select normal mode. The watchdog timeout period is t_{WD}. Connect WDS to V_{CC} to select extended mode, multiplying the basic timeout period (t_{WD}) by a factor of 128. A change in the state of WDS clears the watchdog timer.
8	6	V_{CC}	Supply Voltage. V_{CC} is the power-supply input and the input for fixed threshold V_{CC} monitor. For noisy systems, bypass V_{CC} with a 0.1µF capacitor to GND.
—	5	N.C.	No Connection. Not internally connected.
—	—	EP	Exposed Pad. Connect EP to GND or leave unconnected.

Note 6: Floor: take the integral value.

Detailed Description

The MAX16056–MAX16059 are ultra-low-current 125nA (typ) µP supervisory circuits that monitor a single system supply voltage. These devices assert an active-low reset signal whenever the V_{CC} supply voltage drops below the factory-trimmed reset threshold, manual reset is pulled low, or the watchdog timer runs out (MAX16056/MAX16058). The reset output remains asserted for an adjustable reset timeout period after V_{CC} rises above the reset threshold. The reset and watchdog delay periods are adjustable using external capacitors.

$\overline{RESET}$ Output

The MAX16056–MAX16059 µP supervisory circuits assert a reset to prevent code-execution errors during power-up, power-down, and brownout conditions. The reset output is guaranteed to be valid for V_{CC} down to 1.1V.

When V_{CC} falls below the reset threshold, the $\overline{RESET}$ output asserts low. Once V_{CC} exceeds the reset threshold plus the hysteresis, an internal timer keeps the reset output asserted for the capacitor-adjusted reset timeout period (t_{RP}), then after this interval the reset output deasserts (see Figure 1). The reset function features immunity to power-supply voltage transients.

Manual-Reset Input ($\overline{MR}$)

Many µP-based products require manual-reset capability, allowing the operator, a test technician, or external logic circuitry to initiate a reset. The MAX16056–MAX16059 feature an $\overline{MR}$ input. A logic-low on $\overline{MR}$ asserts a reset. $\overline{RESET}$ remains asserted while $\overline{MR}$ is low and for the timeout period, t_{RP}, after $\overline{MR}$ returns high. Connect $\overline{MR}$ to V_{CC} if unused. $\overline{MR}$ can be driven with CMOS logic levels or with open-drain/collector outputs (with a pullup resistor). Connect a normally open momentary switch from $\overline{MR}$ to GND and a resistor from $\overline{MR}$ to V_{CC} to implement a manual-reset function; external debounce circuitry is not required. If $\overline{MR}$ is driven by long cables or the device is used in a noisy environment, connect a 0.1µF capacitor from $\overline{MR}$ to GND to provide additional noise immunity.

Watchdog Timer

The MAX16056/MAX16058's watchdog timer circuitry monitors the µP's activity. If the µP does not toggle (high-to-low) the watchdog input (WDI) within the capacitor-adjustable watchdog timeout period (t_{WD}), $\overline{RESET}$ asserts for the reset timeout period (t_{RP}). The internal watchdog timer is cleared by: 1) any event that asserts $\overline{RESET}$, by 2) a falling transition at WDI (that can detect pulses as short as 150ns) or by 3) a transition (high-to-low or low-to-high) at WDS. While reset is asserted, the watchdog timer remains cleared and does not count. As soon as reset deasserts, the watchdog timer resumes counting.

There are two modes of watchdog operation, normal mode and extended mode. In normal mode (Figure 2), the watchdog timeout period is determined by the value of the capacitor connected between SWT and ground. In extended mode (Figure 3), the watchdog timeout period is multiplied by 128. For example, in extended mode, a 0.33µF capacitor gives a watchdog timeout period of 217s (see Table 2). To disable the watchdog timer function, connect SWT to ground.

When V_{CC} ramps above $V_{TH} + V_{HYST}$, the value of the external SWT capacitor is sampled after $\overline{RESET}$ goes high. When sampling is finished, the capacitor value is stored in the device and is used to set watchdog timeout. If $\overline{RESET}$ goes low before sampling is finished, the device interrupts sampling, and sampling is restarted when $\overline{RESET}$ goes high again.

If the external SWT capacitor is less than 470pF, the sampling result sets the watchdog timeout to zero. This causes the watchdog to assert $\overline{RESET}$ continuously after sampling is finished. If a PCB manufacturing defect caused the connection to C_{SWT} to be broken, the capacitance is very low and $\overline{RESET}$ is continuously asserted. If the external SWT capacitor is greater than 0.47µF, the sampling result sets the watchdog timeout to be infinite, disabling the watchdog function.

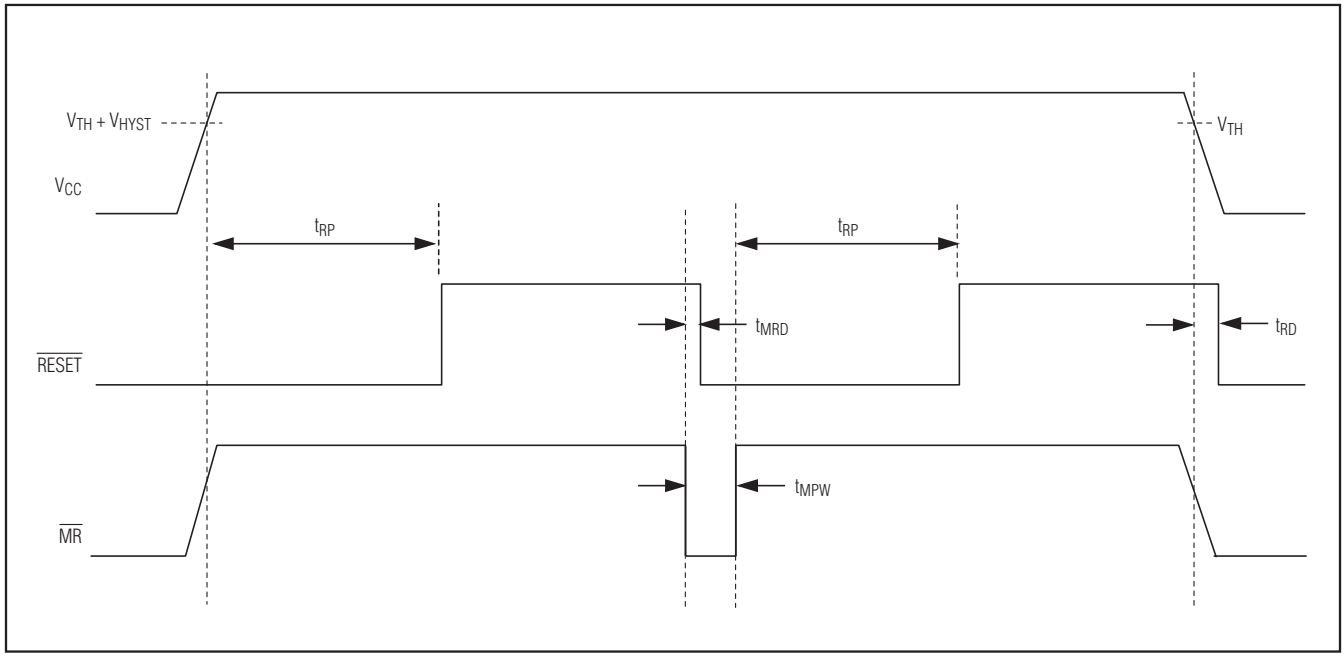

Figure 1. $\overline{RESET}$ Timing Relationship

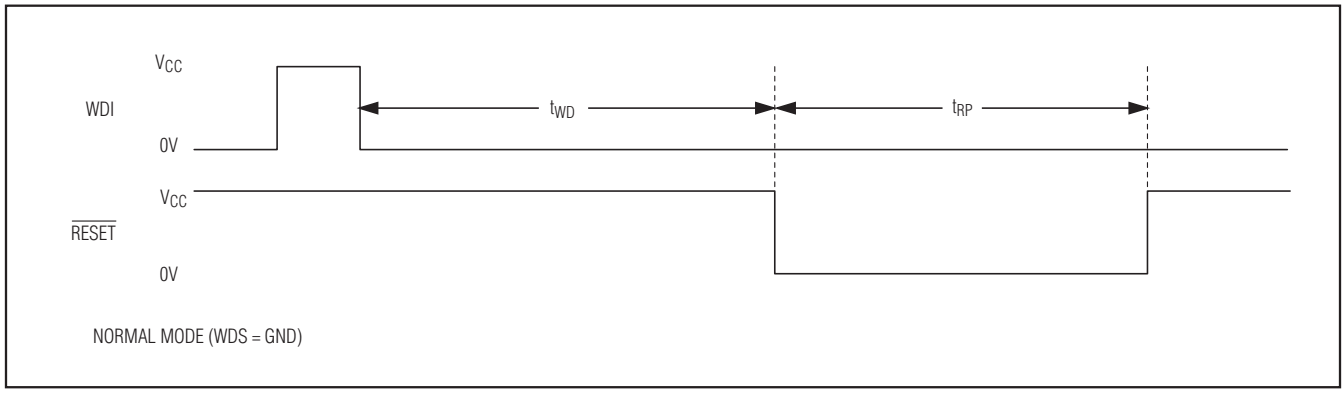

Figure 2. Watchdog Timing Diagram, Normal Mode, WDS = GND

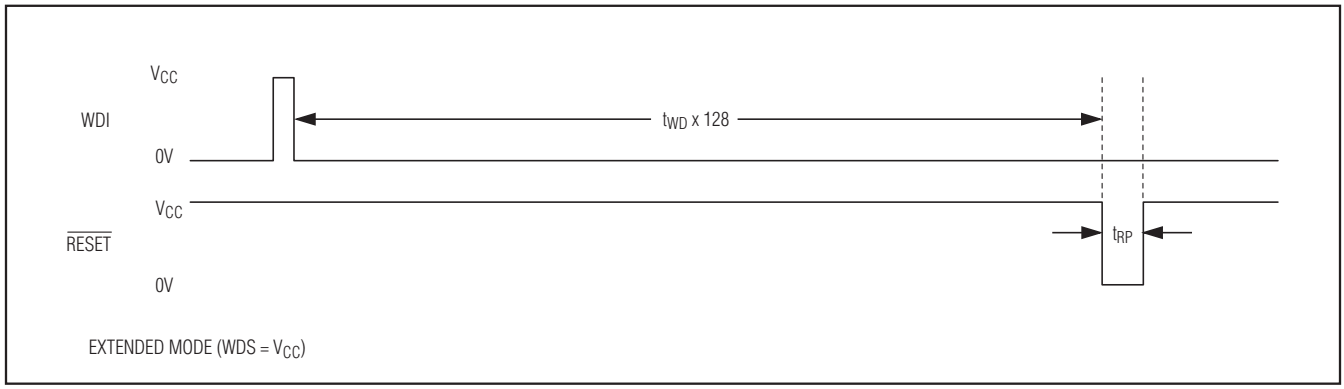

Figure 3. Watchdog Timing Diagram, Extended Mode, WDS = V_{CC}

Applications Information

Selecting the Reset Timeout Capacitor

The reset timeout period is adjustable to accommodate a variety of µP applications. To adjust the reset timeout period (t_{RP}), connect a capacitor (C_{SRT}) between SRT and ground. The reset timeout capacitor is calculated as follows:

$$C_{SRT} = t_{RP}/(5.15 \times 10^6)$$

with t_{RP} in seconds and C_{SRT} in Farads.

C_{SRT} must be a low-leakage (< 10nA) type capacitor. A ceramic capacitor with low temperature coefficient dielectric (i.e., X7R) is recommended.

Selecting Watchdog Timeout Capacitor

The watchdog timeout period is adjustable to accommodate a variety of µP applications. With this feature, the watchdog timeout can be optimized for software execution. The programmer can determine how often the watchdog timer should be serviced. Adjust the watchdog timeout period (t_{WD}) by connecting a capacitor (C_{SWT}) between SWT and GND. For normal mode operation, calculate the watchdog timeout as follows:

t_{WD} = Floor[C_{SWT} x 5.15 x 10^6/6.4ms] x 6.4ms + 3.2ms

with t_{WD} in seconds and C_{SWT} in Farads.

(Floor: take the integral value) (Figures 2 and 3)

The maximum t_{WD} is 296s. If the capacitor sets t_{WD} greater than the 296s, t_{WD} = infinite and the watchdog timer is disabled.

C_{SWT} must be a low-leakage (< 10nA) type capacitor. A ceramic capacitor with low temperature coefficient dielectric (i.e., X7R) is recommended.

Watchdog Timeout Accuracy

The watchdog timeout period is affected by the SWT ramp current (I_{RAMP2}) accuracy, the SWT ramp threshold (V_{RAMP2}) and the watchdog timeout clock period (t_{WDPER}). In the equation above, the constant 5.15 x 10^6 is equal to V_{RAMP2}/I_{RAMP2}, and 6.4ms equals the watchdog timeout clock period. Calculate the timeout accuracy by substituting the minimum, typical, and maximum values into the equation.

For example, if C_{SWT} = 100nF.

t_{WDMIN} = Floor[100 x 10^{-9} x 1.173/(282 x 10^{-9})/9.5ms] x 3.5ms + 0.5 x 3.2ms = 141.7ms

t_{WDNOM} = Floor[100 x 10^{-9} x 1.235/(240 x 10^{-9})/6.4ms] x 6.4ms + 0.5 x 6.4ms = 515.2ms

t_{WDMAX} = Floor[100 x 10^{-9} x 1.297/(197 x 10^{-9})/3.5ms] x 9.5ms + 0.5 x 9.5ms = 1790.75ms

Transient Immunity

For applications with higher slew rates on V_{CC} during power-up, additional bypass capacitance may be required.

The MAX16056–MAX16059 are relatively immune to short-duration supply voltage transients, or glitches on V_{CC}. The Maximum V_{CC} Transient Duration vs. Reset Threshold Overdrive graph in the *Typical Operating Characteristics* shows this transient immunity. The area below the curve of the graph is the region where these devices typically do not generate a reset pulse. This graph was generated using a falling pulse applied to V_{CC}, starting 100mV above the actual reset threshold (V_{TH}) and ending below this threshold (reset threshold overdrive). As the magnitude of the transient increases, the maximum allowable pulse width decreases. Typically, a 100mV V_{CC} transient duration of 40µs or less does not cause a reset.

Using the MAX16056–MAX16059 for Reducing System Power Consumption

Using the $\overline{\text{RESET}}$ output to control an external p-channel MOSFET to control the on-time of a power supply can result in lower system power consumption in systems that can be regularly put to sleep. By tying the WDI input to ground, the $\overline{\text{RESET}}$ output becomes a low-frequency clock output. When $\overline{\text{RESET}}$ is low, the MOSFET is turned on and power is applied to the system. When $\overline{\text{RESET}}$ is high, the MOSFET is turned off and no power is consumed by the system. This effectively reduces the shutdown current of the system to zero (Figure 4).

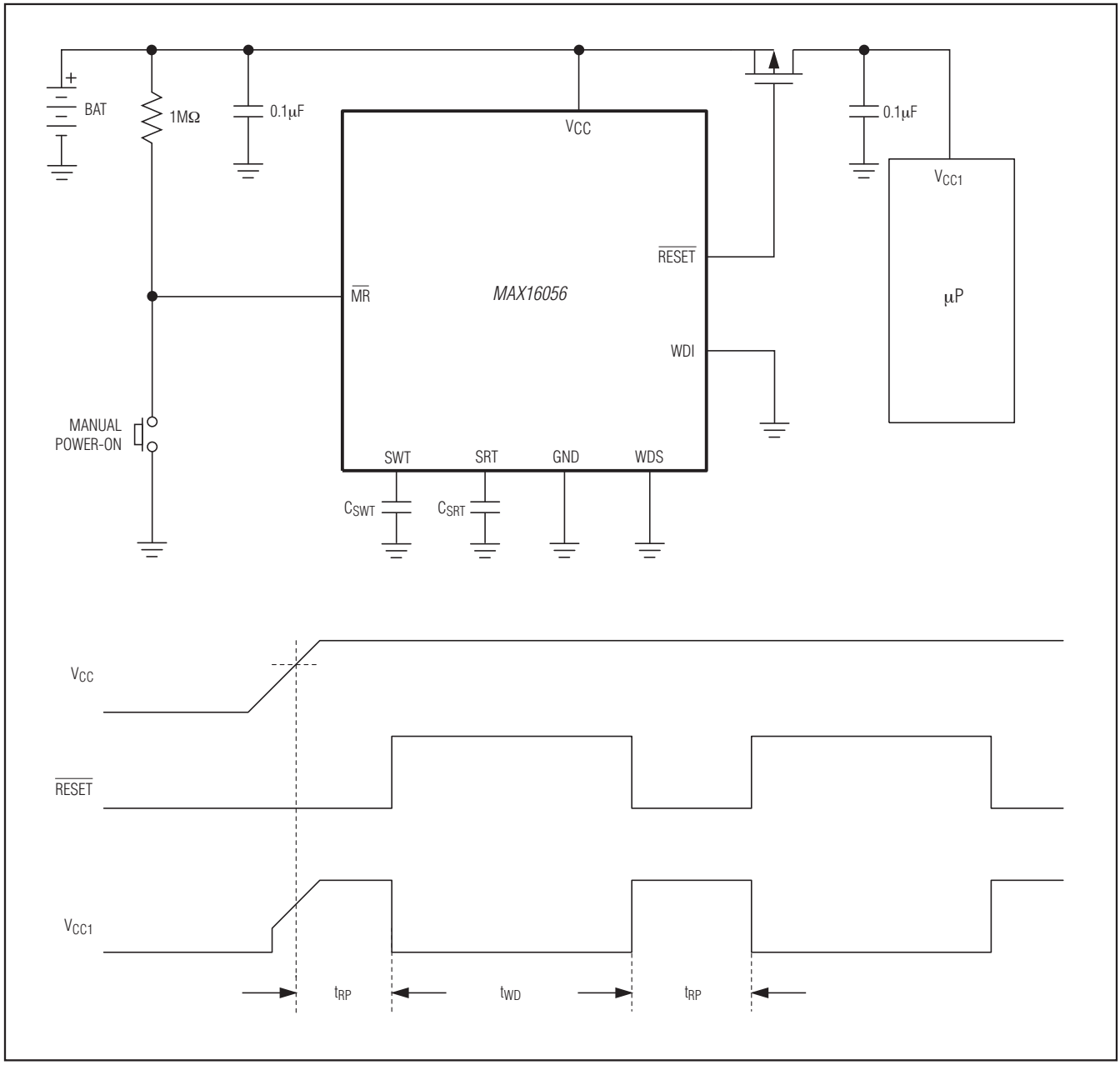

Figure 4. Using MAX16056–MAX16059 to Reduce System Power Consumption

Interfacing to Other Voltages for Logic Compatibility

The open-drain $\overline{RESET}$ output can be used to interface to a µP with other logic levels. The open-drain output is connected to a voltage from 0V to 5.5V as shown in Figure 5. Generally, the pullup resistor connected to $\overline{RESET}$ connects to the supply voltage that is being monitored at the device's V_{CC} input. However, some systems use the open-drain output to level-shift from the supervisor's monitored supply to another supply voltage. As the supervisor's V_{CC} decreases, so does the device's ability to sink current at $\overline{RESET}$.

Ensuring a Valid $\overline{RESET}$ Down to V_{CC} = 0V (Push-Pull $\overline{RESET}$)

When V_{CC} falls below 1.1V, the current-sinking capability of $\overline{RESET}$ decreases drastically. The high-impedance CMOS logic inputs connected to $\overline{RESET}$ can drift to undetermined voltages. This presents no problems in most applications, since most µPs and other circuitry do not operate with V_{CC} below 1.1V. In those applications where $\overline{RESET}$ must be valid down to 0, add a pulldown resistor between the MAX16056/MAX16057 push-pull $\overline{RESET}$ output and GND. The resistor sinks any stray leakage currents, holding $\overline{RESET}$ low (Figure 6). Choose a pulldown resistor that accommodates leakages, such that $\overline{RESET}$ is not significantly loaded and is capable of pulling to GND. The external pulldown cannot be used with the open-drain $\overline{RESET}$ output of the MAX16058/MAX16059.

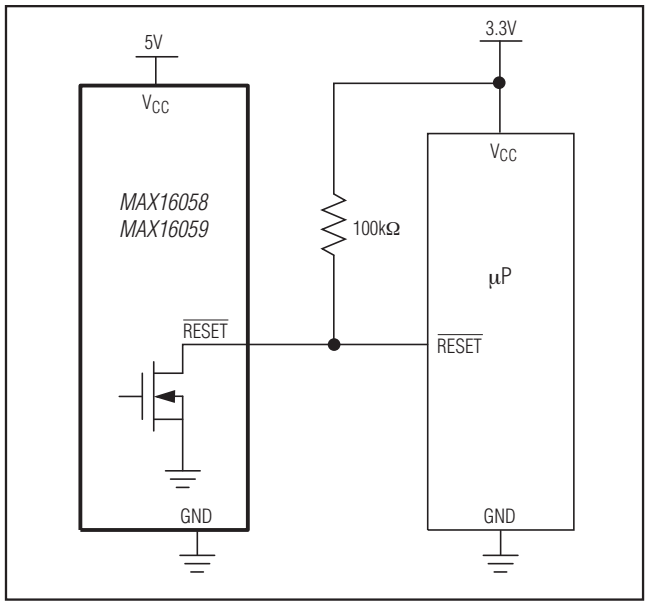

Figure 5. Interfacing with Other Voltage Levels

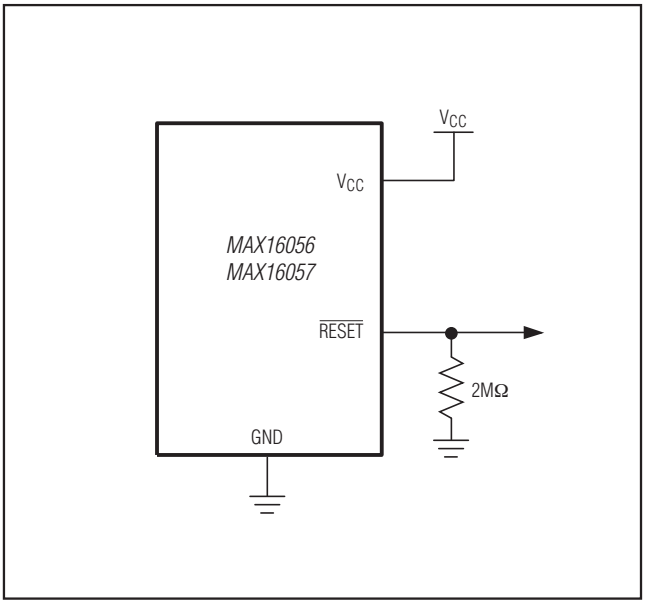

Figure 6. Ensuring $\overline{RESET}$ Valid to V_{CC} = GND

Table 1. Threshold Suffix Guide

SUFFIX	V_{CC} THRESHOLD FALLING (V)		
	MIN	TYP	MAX
46	4.509	4.625	4.741
45	4.388	4.500	4.613
44	4.266	4.375	4.484
43	4.193	4.300	4.408
42	4.095	4.200	4.305
41	3.998	4.100	4.203
40	3.900	4.000	4.100
39	3.802	3.900	3.998
38	3.705	3.800	3.895
37	3.608	3.700	3.793
36	3.510	3.600	3.690
35	3.413	3.500	3.588
34	3.315	3.400	3.485
33	3.218	3.300	3.383
32	3.120	3.200	3.280
31	2.998	3.075	3.152
30	2.925	3.000	3.075
29	2.852	2.925	2.998
28	2.730	2.800	2.870
27	2.633	2.700	2.768
26	2.559	2.625	2.691
25	2.438	2.500	2.563
24	2.340	2.400	2.460
23	2.255	2.313	2.371
225	2.180	2.235	2.290
22	2.133	2.188	2.243
21	2.048	2.100	2.153
20	1.950	2.000	2.050
19	1.853	1.900	1.948
18	1.755	1.800	1.845
17	1.623	1.665	1.707
16	1.536	1.575	1.614

Table 2. Capacitor Selection Guide

CAPACITANCE (pF)	t_{RP} (ms)	t_{WD} (ms)	t_{WD} x 128 (ms)
39	Not recommended	0 (no capacitor is connected)	
47			
56			
68			
82			
100			
120			
150			
180			
220			
270			
330			
390			
470			
560		Indeterminate (0, 9.6, or 16)	Indeterminate (0, 1228.8, or 1636)
680			
820			
1000			
1200			
1500			
1800			
2200			
2700	14.18	16	1641
3300	16.99	16	1641
3900	20.1	22.4	2460
4700	24.21	22.4	2460
5600	28.84	28.8	3280
6800	35.00	35.2	4099
8200	42.23	41.6	4918
10,000	51.5	54.4	6556
12,000	61.8	60.8	7376
15,000	77.25	80	9833
18,000	92.7	92.8	11,472

Table 2. Capacitor Selection Guide (continued)

CAPACITANCE (pF)	t_{RP} (ms)	t_{WD} (ms)	t_{WD} x 128 (ms)
22,000	113.3	112	13,929
27,000	139.05	137.6	17,206
33,000	169.95	169.6	21,302
39,000	200.85	201.6	25,398
47,000	242.05	240	30,313
56,000	288.4	291.2	36,867
68,000	350.2	348.8	44,240
82,000	422.3	419.2	53,251
100,000	515	515.2	65,539
120,000	618	617.6	78,646
150,000	772.5	771.2	98,307
180,000	927	924.8	117,968
220,000	1133	1129.6	144,182
270,000	1390.5	1392	177,769
330,000	1699.5	1699.2	217,091
390,000	2008.5	2006.4	256,412
470,000	2420.5	2416	308,841
680,000	3502	Indeterminate (may be infinite and watchdog is disabled)	
820,000	4223		
1,000,000	5150		
1,500,000	7725		
2,200,000	11,330		
3,300,000	16,995	Infinite (watchdog is disabled)	
4,700,000	24,205		

Table 3. Standard Versions

PART	TOP MARK
MAX16056ATA17+	BKZ
MAX16056ATA23+	BLA
MAX16056ATA26+	BLB
MAX16056ATA29+	BLC
MAX16056ATA31+	BLD
MAX16056ATA46+	BLE
MAX16057ATT17+	ATQ
MAX16057ATT23+	ATR
MAX16057ATT26+	ATS
MAX16057ATT29+	ATT
MAX16057ATT31+	AUC
MAX16057ATT46+	AUD
MAX16058ATA16+	BLF
MAX16058ATA22+	BLG
MAX16058ATA26+	BLH
MAX16058ATA29+	BLI
MAX16058ATA31+	BLJ
MAX16058ATA44+	BLK
MAX16059ATT16+	ATW
MAX16059ATT22+	ATX
MAX16059ATT26+	ATY
MAX16059ATT29+	ATZ
MAX16059ATT31+	AUA
MAX16059ATT44+	AUB

125nA Supervisory Circuits with Capacitor-Adjustable Reset and Watchdog Timeouts

Typical Operating Circuit

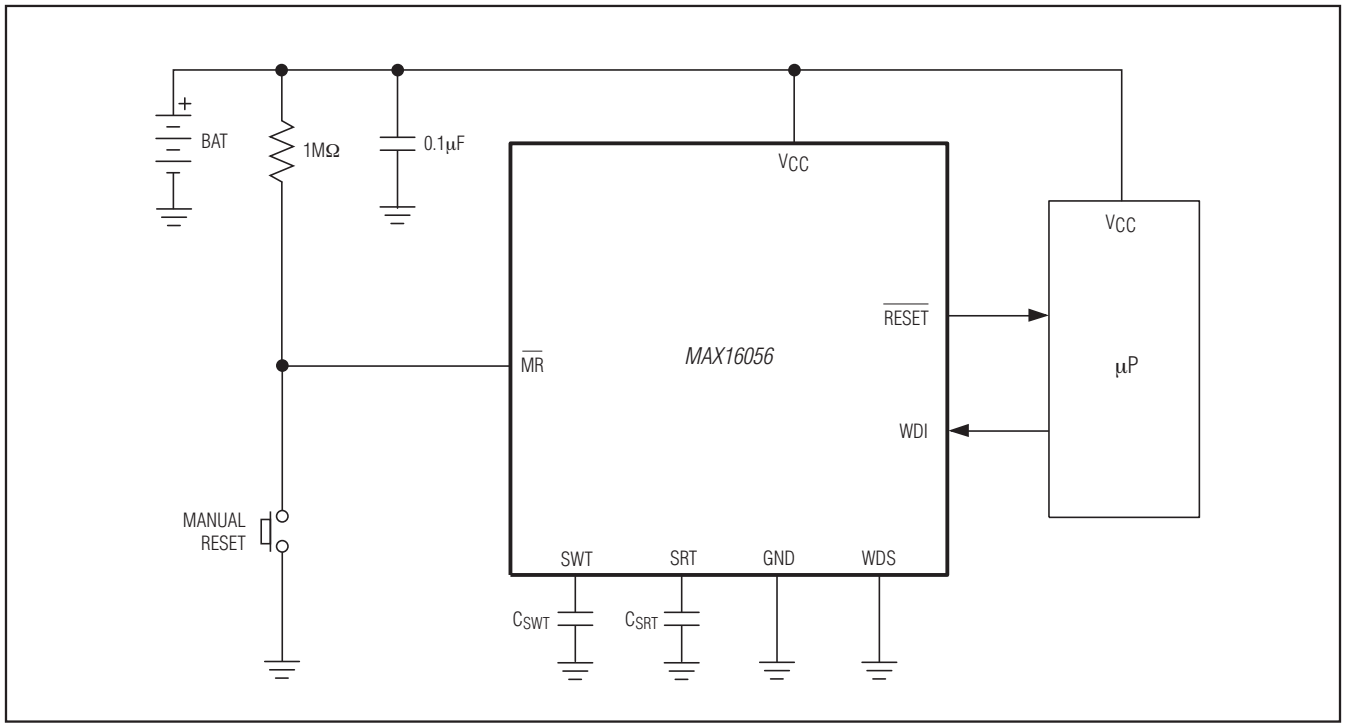

Chip Information

PROCESS: BiCMOS

Package Information

For the latest package outline information and land patterns (footprints), go to **www.maximintegrated.com/packages**. Note that a "+", "#", or "-" in the package code indicates RoHS status only. Package drawings may show a different suffix character, but the drawing pertains to the package regardless of RoHS status.

PACKAGE TYPE	PACKAGE CODE	OUTLINE NO.	LAND PATTERN NO.
8 TDFN-EP	T833-2	21-0137	90-0059
6 TDFN-EP	T633-2	21-0137	90-0058

Revision History

REVISION NUMBER	REVISION DATE	DESCRIPTION	PAGES CHANGED
0	6/09	Initial release	—
1	6/10	Updated *Absolute Maximum Ratings*, *Electrical Characteristics*, and Table 3.	2, 3, 15
2	4/13	Removed Automotive Infotainment from *Applications* sections	1

Maxim Integrated cannot assume responsibility for use of any circuitry other than circuitry entirely embodied in a Maxim Integrated product. No circuit patent licenses are implied. Maxim Integrated reserves the right to change the circuitry and specifications without notice at any time. The parametric values (min and max limits) shown in the Electrical Characteristics table are guaranteed. Other parametric values quoted in this data sheet are provided for guidance.

© 2013 Maxim Integrated Products, Inc. Maxim Integrated and the Maxim Integrated logo are trademarks of Maxim Integrated Products, Inc.